Quad 2-Input NAND Schmitt Trigger

MC74VHCT132A

The MC74VHCT132A is an advanced high speed CMOS Schmitt NAND trigger fabricated with silicon gate CMOS technology. It achieves high speed operation similar to equivalent Bipolar Schottky TTL while maintaining CMOS low power dissipation.

Pin configuration and function are the same as the MC74VHC00, but the inputs have hysteresis and, with its Schmitt trigger function, the VHCT132A can be used as a line receiver which will receive slow input signals.

The VHCT inputs are compatible with TTL levels. This device can be used as a level converter for interfacing 3.3V to 5.0V, because it has full 5V CMOS level output swings.

The VHCT132A input structures provide protection when voltages between 0V and 5.5V are applied, regardless of the supply voltage. The output structures also provide protection when V_{CC} = 0V. These input and output structures help prevent device destruction caused by supply voltage – input/output voltage mismatch, battery backup, hot insertion, etc.

The internal circuit is composed of three stages, including a buffer output which provides high noise immunity and stable output. The inputs tolerate voltages up to 7V, allowing the interface of 5V systems to 3V systems.

- High Speed: t_{PD} = 4.9ns (Typ) at V_{CC} = 5V
- Low Power Dissipation: I_{CC} = 2μA (Max) at T_A = 25°C
- TTL–Compatible Inputs: V_{IL} = 0.8V; V_{IH} = 2.0V
- Power Down Protection Provided on Inputs
- Balanced Propagation Delays
- Designed for 2V to 5.5V Operating Range
- Low Noise: V_{OLP} = 0.8V (Max)
- Pin and Function Compatible with Other Standard Logic Families
- Latchup Performance Exceeds 300mA
- ESD Performance: HBM > 2000V; Machine Model > 200V
- Chip Complexity: 72 FETs or 18 Equivalent Gates

D SUFFIX
14–LEAD SOIC PACKAGE
CASE 751A–03

DT SUFFIX
14–LEAD TSSOP PACKAGE
CASE 948G–01

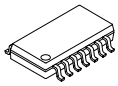

M SUFFIX
14–LEAD SOIC EIAJ PACKAGE
CASE 965–01

ORDERING INFORMATION

MC74VHCTXXAD	SOIC
MC74VHCTXXADT	TSSOP
MC74VHCTXXAM	SOIC EIAJ

Pinout: 14–Lead Packages (Top View)

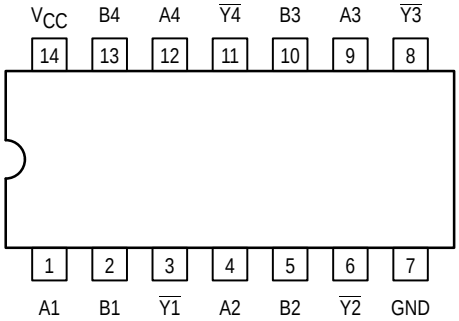

FUNCTION TABLE

Inputs		Output
A	B	$\overline{Y}$
L	L	H
L	H	H
H	L	H
H	H	L

LOGIC DIAGRAM

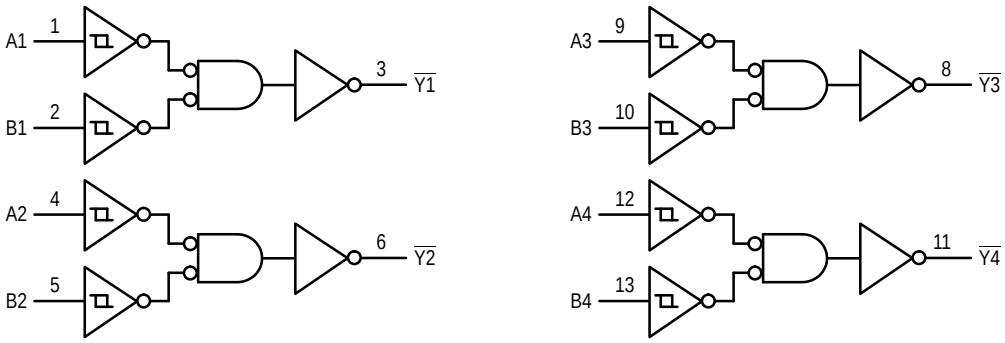

© Motorola, Inc. 1999

MAXIMUM RATINGS*

Symbol	Parameter	Value	Unit
V_{CC}	DC Supply Voltage	– 0.5 to + 7.0	V
V_{in}	DC Input Voltage	– 0.5 to + 7.0	V
V_{out}	DC Output Voltage	– 0.5 to V_{CC} + 0.5	V
I_{IK}	Input Diode Current	– 20	mA
I_{OK}	Output Diode Current	± 20	mA
I_{out}	DC Output Current, per Pin	± 25	mA
I_{CC}	DC Supply Current, V_{CC} and GND Pins	± 50	mA
P_D	Power Dissipation in Still Air, SOIC Packages† TSSOP Package†	500 450	mW
T_{stg}	Storage Temperature	– 65 to + 150	°C

This device contains protection circuitry to guard against damage due to high static voltages or electric fields. However, precautions must be taken to avoid applications of any voltage higher than maximum rated voltages to this high–impedance circuit. For proper operation, V_{in} and V_{out} should be constrained to the range GND ≤ (V_{in} or V_{out}) ≤ V_{CC}.

Unused inputs must always be tied to an appropriate logic voltage level (e.g., either GND or V_{CC}). Unused outputs must be left open.

* Absolute maximum continuous ratings are those values beyond which damage to the device may occur. Exposure to these conditions or conditions beyond those indicated may adversely affect device reliability. Functional operation under absolute–maximum–rated conditions is not implied.

†Derating — SOIC Packages: – 7 mW/°C from 65° to 125°C
TSSOP Package: – 6.1 mW/°C from 65° to 125°C

RECOMMENDED OPERATING CONDITIONS

Symbol	Parameter	Min	Max	Unit
V_{CC}	DC Supply Voltage	4.5	5.5	V
V_{in}	DC Input Voltage	0	5.5	V
V_{out}	DC Output Voltage	0	V_{CC}	V
T_A	Operating Temperature, All Package Types	– 40	+ 85	°C

DC ELECTRICAL CHARACTERISTICS

Symbol	Parameter	Test Conditions	V_{CC} V	T_A = 25°C			T_A ≤ 85°C		T_A ≤ 125°C		Unit
				Min	Typ	Max	Min	Max	Min	Max	
V_{T+}	Positive Threshold Voltage		3.0 4.5 5.5			1.7 2.0 2.0		1.6 2.0 2.0		1.6 2.0 2.0	V
V_{T-}	Negative Threshold Voltage		3.0 4.5 6.0	0.35 0.5 0.6			0.35 0.5 0.6		0.35 0.5 0.6		V
V_H	Hysteresis Voltage		3.0 4.5 5.5	0.30 0.40 0.50		1.20 1.40 1.60	0.30 0.40 0.50	1.20 1.40 1.60	0.30 0.40 0.50	1.20 1.40 1.60	V
V_{OH}	Minimum High–Level Output Voltage I_{OH} = –50μA	V_{IN} = V_{IH} or V_{IL} I_{OH} = – 50μA	2.0 3.0 4.5	1.9 2.9 4.4	2.0 3.0 4.5		1.9 2.9 4.4		1.9 2.9 4.4		V
		I_{OH} = – 4mA I_{OH} = – 8mA	4.5 5.5	2.58 3.94			2.48 3.80		2.34 3.66		
V_{OL}	Maximum Low–Level Output Voltage	V_{IN} = V_{IH} or V_{IL} I_{OL} = 50μA	2.0 3.0 4.5		0.0 0.0 0.0	0.1 0.1 0.1		0.1 0.1 0.1		0.1 0.1 0.1	V
		I_{OL} = 4mA I_{OL} = 8mA	4.5 5.5			0.36 0.36		0.44 0.44		0.52 0.52	
I_{IN}	Maximum Input Leakage Current	V_{IN} = 5.5V or GND	0 to 5.5			± 0.1		± 1.0		± 1.0	μA
I_{CC}	Maximum Quiescent Supply Current	V_{IN} = V_{CC} or GND	5.5			2.0		20		40	μA
I_{CCT}	Quiescent Supply Current	Input: V_{IN} = 3.4V	5.5			1.35		1.50		1.65	mA
I_{OPD}	Output Leakage Current	V_{OUT} = 5.5V	0.0			0.5		5.0		10	μA

AC ELECTRICAL CHARACTERISTICS (Input $t_r = t_f = 3.0$ns)

Symbol	Parameter	Test Conditions		$T_A = 25°C$ Min	$T_A = 25°C$ Typ	$T_A = 25°C$ Max	$T_A = -40$ to $85°C$ Min	$T_A = -40$ to $85°C$ Max	$T_A \leq 125°C$ Min	$T_A \leq 125°C$ Max	Unit
t_{PLH}, t_{PHL}	Maximum Propagation Delay, A or B to $\overline{Y}$	$V_{CC} = 3.3 \pm 0.3$ V	$C_L = 15$pF		7.6	11.9	1.0	14.0		16.5	ns
			$C_L = 50$pF		10.1	15.4	1.0	17.5		20.0	
		$V_{CC} = 5.0 \pm 0.5$ V	$C_L = 15$pF		4.9	7.7	1.0	9.0		11.0	
			$C_L = 50$pF		6.4	9.7	1.0	11.0		13.0	
C_{in}	Maximum Input Capacitance				4	10		10		10	pF

		Typical @ 25°C, $V_{CC} = 5.0$ V	
C_{PD}	Power Dissipation Capacitance (Note 1.)	16	pF

1. C_{PD} is defined as the value of the internal equivalent capacitance which is calculated from the operating current consumption without load. Average operating current can be obtained by the equation: $I_{CC(OPR)} = C_{PD} \bullet V_{CC} \bullet f_{in} + I_{CC}/4$ (per gate). C_{PD} is used to determine the no–load dynamic power consumption; $P_D = C_{PD} \bullet V_{CC}^2 \bullet f_{in} + I_{CC} \bullet V_{CC}$.

NOISE CHARACTERISTICS (Input $t_r = t_f = 3.0$ns, $C_L = 50$pF, $V_{CC} = 5.0$ V)

Symbol	Characteristic	$T_A = 25°C$ Typ	$T_A = 25°C$ Max	Unit
V_{OLP}	Quiet Output Maximum Dynamic V_{OL}	0.3	0.8	V
V_{OLV}	Quiet Output Minimum Dynamic V_{OL}	– 0.3	– 0.8	V
V_{IHD}	Minimum High Level Dynamic Input Voltage		3.5	V
V_{ILD}	Maximum Low Level Dynamic Input Voltage		1.5	V

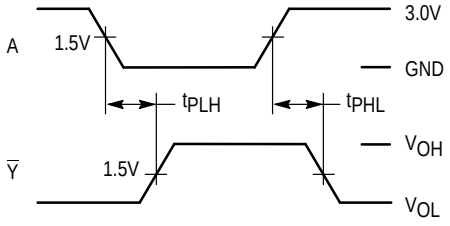

Figure 1. Switching Waveforms

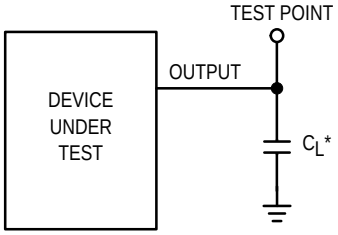

* Includes all probe and jig capacitance

Figure 2. Test Circuit

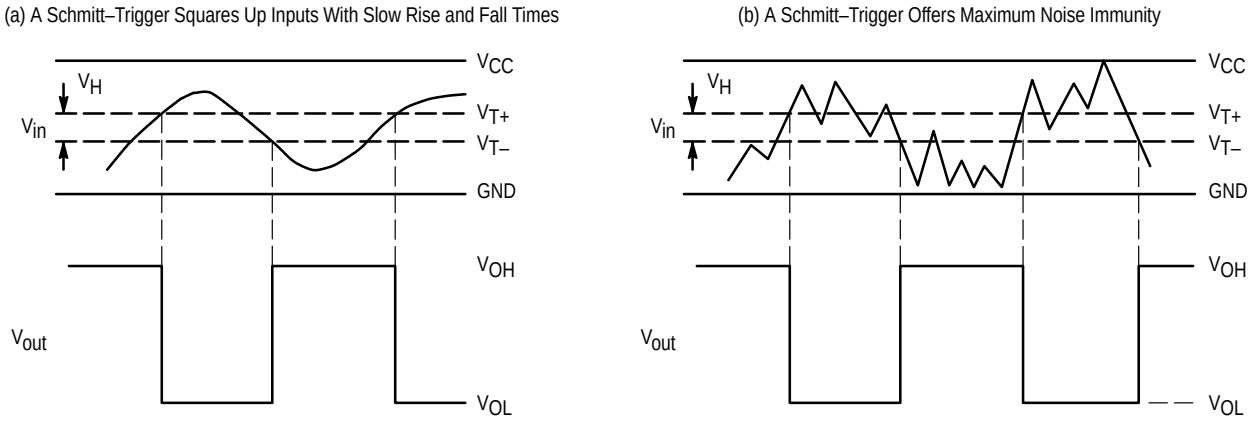

Figure 3. Typical Schmitt–Trigger Applications

OUTLINE DIMENSIONS

D SUFFIX
PLASTIC SOIC PACKAGE
CASE 751A–03
ISSUE F

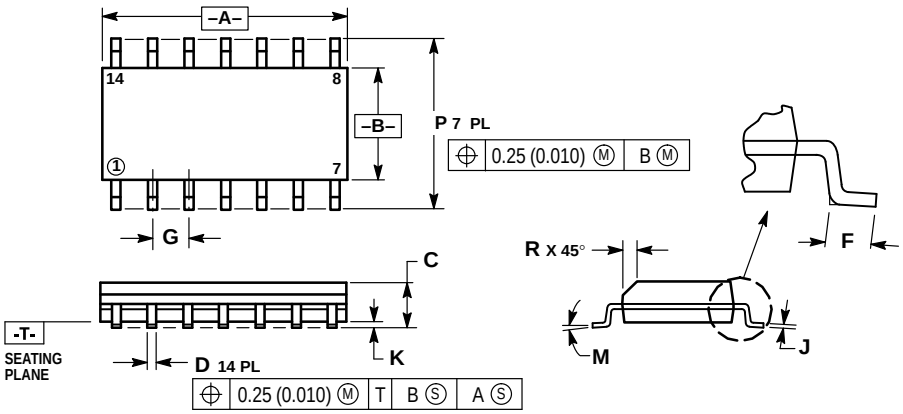

NOTES:
1. DIMENSIONING AND TOLERANCING PER ANSI Y14.5M, 1982.
2. CONTROLLING DIMENSION: MILLIMETER.
3. DIMENSIONS A AND B DO NOT INCLUDE MOLD PROTRUSION.
4. MAXIMUM MOLD PROTRUSION 0.15 (0.006) PER SIDE.
5. DIMENSION D DOES NOT INCLUDE DAMBAR PROTRUSION. ALLOWABLE DAMBAR PROTRUSION SHALL BE 0.127 (0.005) TOTAL IN EXCESS OF THE D DIMENSION AT MAXIMUM MATERIAL CONDITION.

	MILLIMETERS		INCHES	
DIM	MIN	MAX	MIN	MAX
A	8.55	8.75	0.337	0.344
B	3.80	4.00	0.150	0.157
C	1.35	1.75	0.054	0.068
D	0.35	0.49	0.014	0.019
F	0.40	1.25	0.016	0.049
G	1.27 BSC		0.050 BSC	
J	0.19	0.25	0.008	0.009
K	0.10	0.25	0.004	0.009
M	0°	7°	0°	7°
P	5.80	6.20	0.228	0.244
R	0.25	0.50	0.010	0.019

OUTLINE DIMENSIONS

DT SUFFIX
PLASTIC TSSOP PACKAGE
CASE 948G–01
ISSUE O

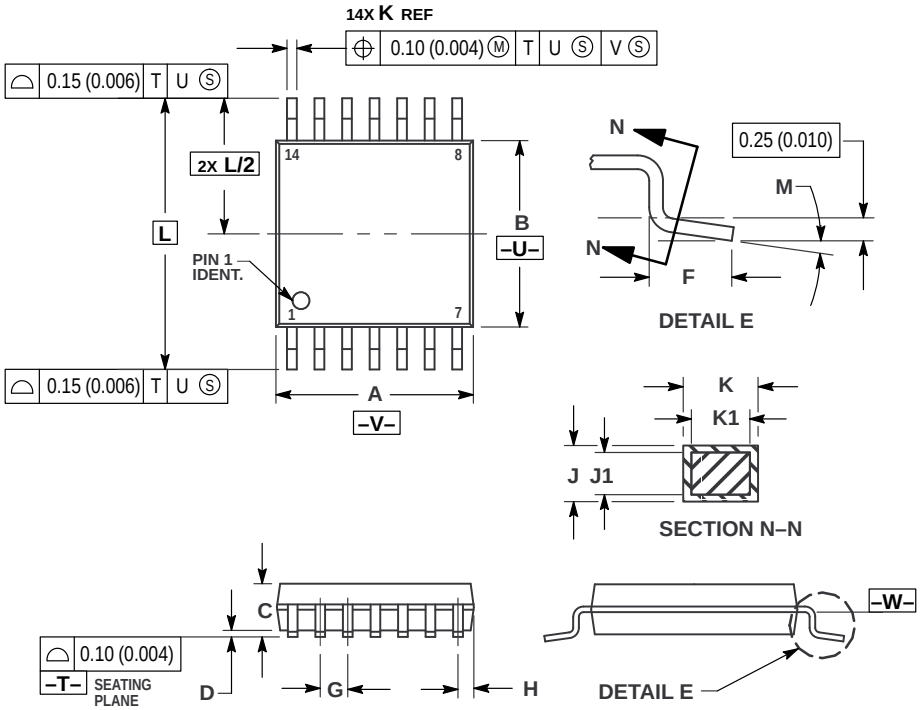

NOTES:
1. DIMENSIONING AND TOLERANCING PER ANSI Y14.5M, 1982.
2. CONTROLLING DIMENSION: MILLIMETER.
3. DIMENSION A DOES NOT INCLUDE MOLD FLASH, PROTRUSIONS OR GATE BURRS. MOLD FLASH OR GATE BURRS SHALL NOT EXCEED 0.15 (0.006) PER SIDE.
4. DIMENSION B DOES NOT INCLUDE INTERLEAD FLASH OR PROTRUSION. INTERLEAD FLASH OR PROTRUSION SHALL NOT EXCEED 0.25 (0.010) PER SIDE.
5. DIMENSION K DOES NOT INCLUDE DAMBAR PROTRUSION. ALLOWABLE DAMBAR PROTRUSION SHALL BE 0.08 (0.003) TOTAL IN EXCESS OF THE K DIMENSION AT MAXIMUM MATERIAL CONDITION.
6. TERMINAL NUMBERS ARE SHOWN FOR REFERENCE ONLY.
7. DIMENSION A AND B ARE TO BE DETERMINED AT DATUM PLANE –W–.

	MILLIMETERS		INCHES	
DIM	MIN	MAX	MIN	MAX
A	4.90	5.10	0.193	0.200
B	4.30	4.50	0.169	0.177
C	—	1.20	—	0.047
D	0.05	0.15	0.002	0.006
F	0.50	0.75	0.020	0.030
G	0.65 BSC		0.026 BSC	
H	0.50	0.60	0.020	0.024
J	0.09	0.20	0.004	0.008
J1	0.09	0.16	0.004	0.006
K	0.19	0.30	0.007	0.012
K1	0.19	0.25	0.007	0.010
L	6.40 BSC		0.252 BSC	
M	0°	8°	0°	8°

OUTLINE DIMENSIONS

M SUFFIX
PLASTIC SOIC EIAJ PACKAGE
CASE 965–01
ISSUE O

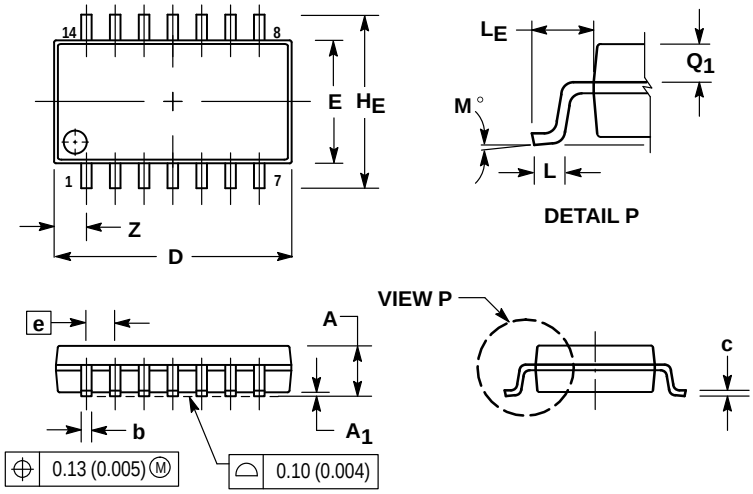

NOTES:
1. DIMENSIONING AND TOLERANCING PER ANSI Y14.5M, 1982.
2. CONTROLLING DIMENSION: MILLIMETER.
3. DIMENSIONS D AND E DO NOT INCLUDE MOLD FLASH OR PROTRUSIONS AND ARE MEASURED AT THE PARTING LINE. MOLD FLASH OR PROTRUSIONS SHALL NOT EXCEED 0.15 (0.006) PER SIDE.
4. TERMINAL NUMBERS ARE SHOWN FOR REFERENCE ONLY.
5. THE LEAD WIDTH DIMENSION (b) DOES NOT INCLUDE DAMBAR PROTRUSION. ALLOWABLE DAMBAR PROTRUSION SHALL BE 0.08 (0.003) TOTAL IN EXCESS OF THE LEAD WIDTH DIMENSION AT MAXIMUM MATERIAL CONDITION. DAMBAR CANNOT BE LOCATED ON THE LOWER RADIUS OR THE FOOT. MINIMUM SPACE BETWEEN PROTRUSIONS AND ADJACENT LEAD TO BE 0.46 (0.018).

	MILLIMETERS		INCHES	
DIM	MIN	MAX	MIN	MAX
A	—	2.05	—	0.081
A_1	0.05	0.20	0.002	0.008
b	0.35	0.50	0.014	0.020
c	0.18	0.27	0.007	0.011
D	9.90	10.50	0.390	0.413
E	5.10	5.45	0.201	0.215
e	1.27 BSC		0.050 BSC	
H_E	7.40	8.20	0.291	0.323
0.50	0.50	0.85	0.020	0.033
L_E	1.10	1.50	0.043	0.059
M	0 °	10 °	0 °	10 °
Q_1	0.70	0.90	0.028	0.035
Z	—	1.42	—	0.056

Motorola reserves the right to make changes without further notice to any products herein. Motorola makes no warranty, representation or guarantee regarding the suitability of its products for any particular purpose, nor does Motorola assume any liability arising out of the application or use of any product or circuit, and specifically disclaims any and all liability, including without limitation consequential or incidental damages. "Typical" parameters which may be provided in Motorola data sheets and/or specifications can and do vary in different applications and actual performance may vary over time. All operating parameters, including "Typicals" must be validated for each customer application by customer's technical experts. Motorola does not convey any license under its patent rights nor the rights of others. Motorola products are not designed, intended, or authorized for use as components in systems intended for surgical implant into the body, or other applications intended to support or sustain life, or for any other application in which the failure of the Motorola product could create a situation where personal injury or death may occur. Should Buyer purchase or use Motorola products for any such unintended or unauthorized application, Buyer shall indemnify and hold Motorola and its officers, employees, subsidiaries, affiliates, and distributors harmless against all claims, costs, damages, and expenses, and reasonable attorney fees arising out of, directly or indirectly, any claim of personal injury or death associated with such unintended or unauthorized use, even if such claim alleges that Motorola was negligent regarding the design or manufacture of the part. Motorola and Ⓜ are registered trademarks of Motorola, Inc. Motorola, Inc. is an Equal Opportunity/Affirmative Action Employer.

Mfax is a trademark of Motorola, Inc.

How to reach us:
USA / EUROPE / Locations Not Listed: Motorola Literature Distribution;
P.O. Box 5405, Denver, Colorado 80217. 1–303–675–2140 or 1–800–441–2447

JAPAN: Motorola Japan Ltd.; SPD, Strategic Planning Office, 141,
4–32–1 Nishi–Gotanda, Shinagawa–ku, Tokyo, Japan. 81–3–5487–8488

Customer Focus Center: 1–800–521–6274

Mfax™: RMFAX0@email.sps.mot.com – TOUCHTONE 1–602–244–6609
Motorola Fax Back System – US & Canada ONLY 1–800–774–1848
– http://sps.motorola.com/mfax/

HOME PAGE: http://motorola.com/sps/

ASIA / PACIFIC: Motorola Semiconductors H.K. Ltd.; Silicon Harbour Centre,
2, Dai King Street, Tai Po Industrial Estate, Tai Po, N.T., Hong Kong.
852–26629298

ООО «ЛайфЭлектроникс» “LifeElectronics” LLC

ИНН 7805602321 КПП 780501001 Р/С 40702810122510004610 ФАКБ "АБСОЛЮТ БАНК" (ЗАО) в г.Санкт-Петербурге К/С 30101810900000000703 БИК 044030703

Компания «Life Electronics» занимается поставками электронных компонентов импортного и отечественного производства от производителей и со складов крупных дистрибьюторов Европы, Америки и Азии.

С конца 2013 года компания активно расширяет линейку поставок компонентов по направлению коаксиальный кабель, кварцевые генераторы и конденсаторы (керамические, пленочные, электролитические), за счёт заключения дистрибьюторских договоров

Мы предлагаем:

- *Конкурентоспособные цены и скидки постоянным клиентам.*
- *Специальные условия для постоянных клиентов.*
- *Подбор аналогов.*
- *Поставку компонентов в любых объемах, удовлетворяющих вашим потребностям.*

- *Приемлемые сроки поставки, возможна ускоренная поставка.*
- *Доставку товара в любую точку России и стран СНГ.*
- *Комплексную поставку.*
- *Работу по проектам и поставку образцов.*
- *Формирование склада под заказчика.*

- *Сертификаты соответствия на поставляемую продукцию (по желанию клиента).*
- *Тестирование поставляемой продукции.*
- *Поставку компонентов, требующих военную и космическую приемку.*
- *Входной контроль качества.*
- *Наличие сертификата ISO.*

В составе нашей компании организован Конструкторский отдел, призванный помогать разработчикам, и инженерам.

Конструкторский отдел помогает осуществить:

- *Регистрацию проекта у производителя компонентов.*
- *Техническую поддержку проекта.*
- *Защиту от снятия компонента с производства.*
- *Оценку стоимости проекта по компонентам.*
- *Изготовление тестовой платы монтаж и пусконаладочные работы.*

Тел: +7 (812) 336 43 04 (многоканальный)
Email: org@lifeelectronics.ru

www.lifeelectronics.ru