IS61WV5128ALL/ALS
IS61WV5128BLL/BLS
IS64WV5128BLL/BLS

512K x 8 HIGH-SPEED ASYNCHRONOUS CMOS STATIC RAM

AUGUST 2009

FEATURES

HIGH SPEED: (IS61/64WV5128ALL/BLL)

- High-speed access time: 8, 10, 20 ns
- Low Active Power: 85 mW (typical)
- Low stand-by power: 7 mW (typical) CMOS standby

LOW POWER: (IS61/64WV5128ALS/BLS)

- High-speed access time: 25, 35 ns
- Low Active Power: 35 mW (typical)
- Low stand-by power: 0.6 mW (typical) CMOS standby
- Single power supply
  - — V_{DD} 1.65V to 2.2V (IS61WV5128Axx)
  - — V_{DD} 2.4V to 3.6V (IS61/64WV5128Bxx)
- Fully static operation: no clock or refresh required
- Three state outputs
- Industrial and Automotive temperature support
- Lead-free available

DESCRIPTION

The *ISSI* IS61WV5128Axx and IS61/64WV5128Bxx are very high-speed, low power, 524,288-word by 8-bit CMOS static RAMs. The IS61WV5128Axx and IS61/64WV5128Bxx are fabricated using *ISSI*'s high-performance CMOS technology. This highly reliable process coupled with innovative circuit design techniques, yields higher performance and low power consumption devices.

When $\overline{CE}$ is HIGH (deselected), the device assumes a standby mode at which the power dissipation can be reduced down with CMOS input levels.

The IS61WV5128Axx and IS61/64WV5128Bxx operate from a single power supply.

The IS61WV5128ALL and IS61/64WV5128BLL are available in 36-pin 400-mil SOJ, 36-pin mini BGA, and 44-pin TSOP (Type II) packages.

The IS61WV5128ALS and IS61/64WV5128BLS are available in 32-pinTSOP (Type I), 32-pin sTSOP (Type I), 32-pin SOP and 32-pin TSOP (Type II) packages.

FUNCTIONAL BLOCK DIAGRAM

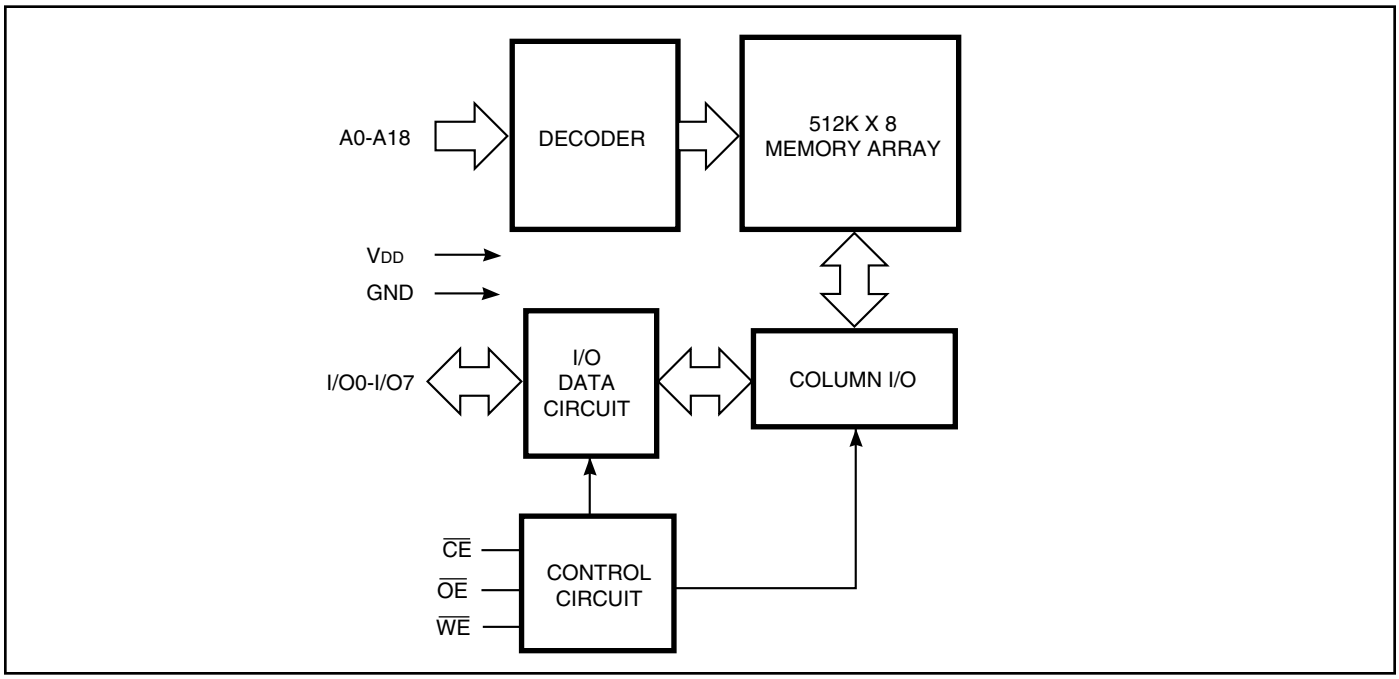

Copyright © 2006 Integrated Silicon Solution, Inc. All rights reserved. ISSI reserves the right to make changes to this specification and its products at any time without notice. ISSI assumes no liability arising out of the application or use of any information, products or services described herein. Customers are advised to obtain the latest version of this device specification before relying on any published information and before placing orders for products.

PIN CONFIGURATION (HIGH SPEED) (61/64WV5128ALL/BLL)

36 mini BGA

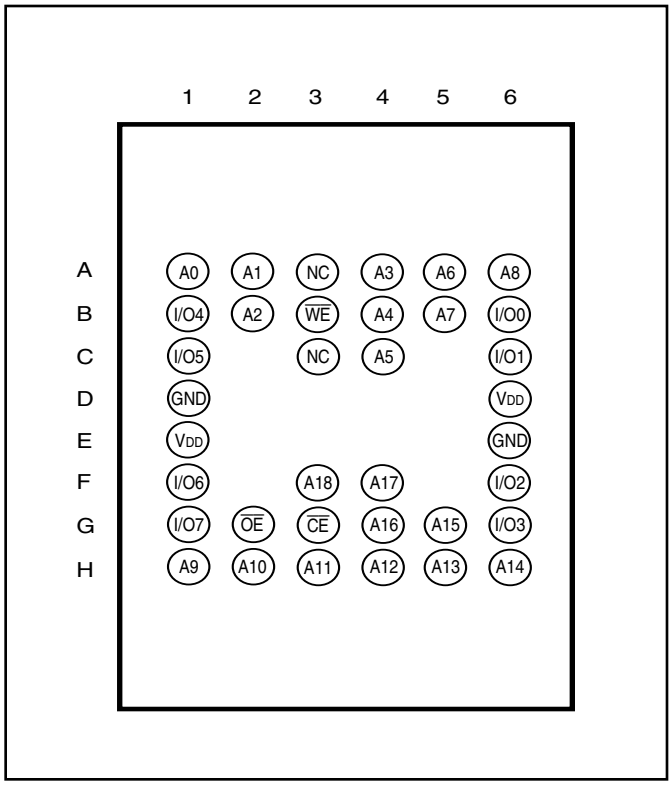

44-Pin TSOP (Type II)

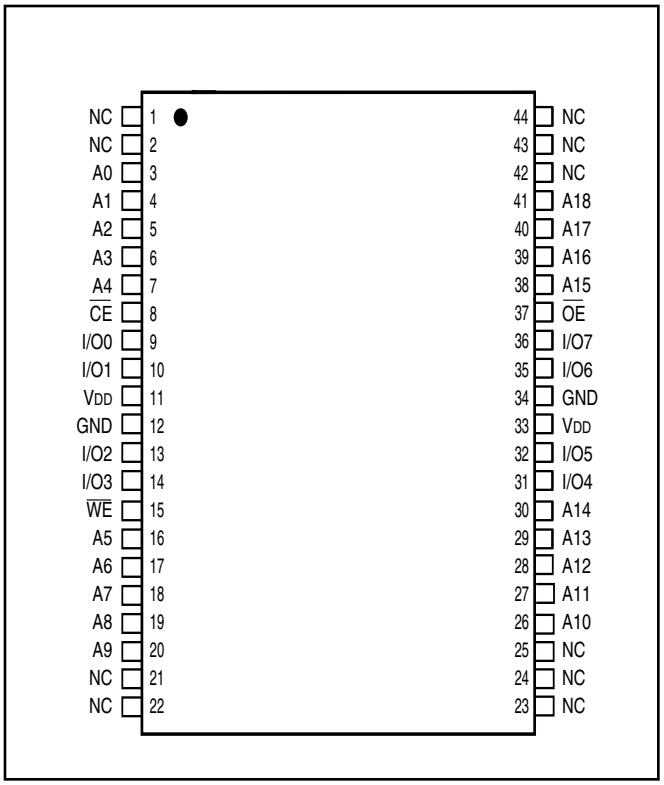

PIN DESCRIPTIONS

A0-A18	Address Inputs
$\overline{CE}$	Chip Enable Input
$\overline{OE}$	Output Enable Input
$\overline{WE}$	Write Enable Input
I/O0-I/O7	Bidirectional Ports
V_{DD}	Power
GND	Ground
NC	No Connection

36-Pin SOJ

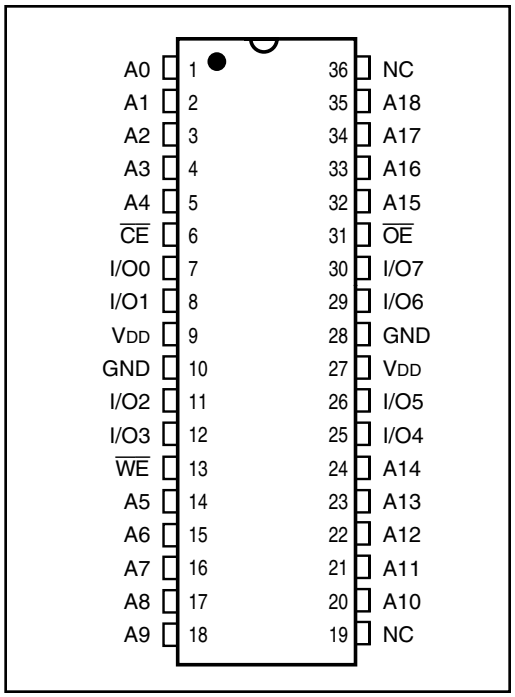

PIN CONFIGURATION (LOW POWER) (61/64WV5128ALS/BLS)

32-pin TSOP (TYPE I), (Package Code T)
32-pin sTSOP (TYPE I) (Package Code H)

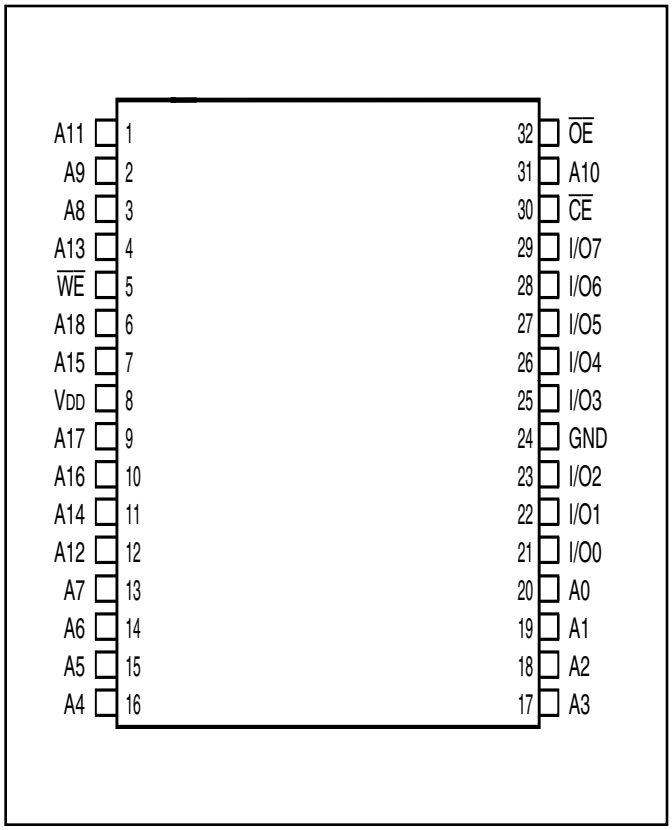

32-pin SOP
32-pin TSOP (TYPE II)
(Package Code T2)

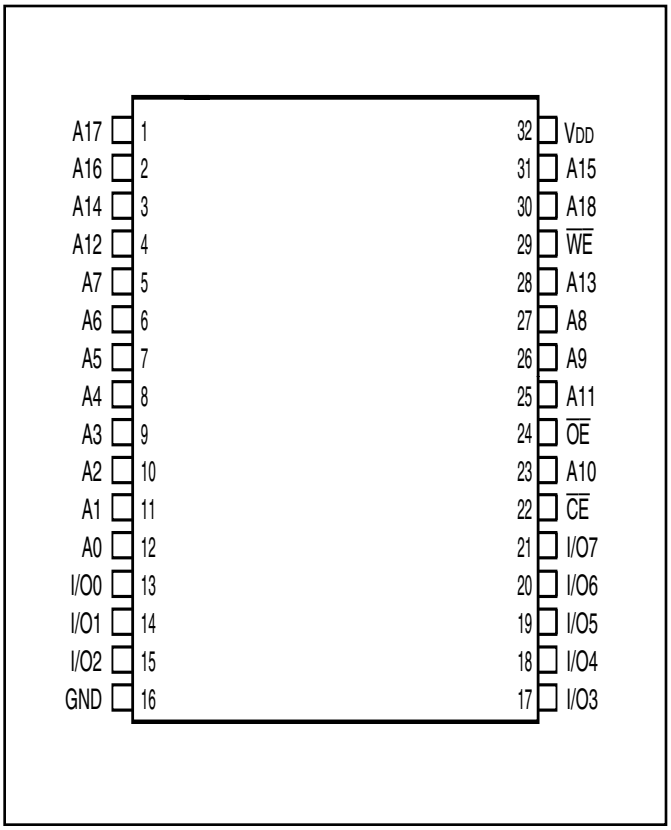

PIN DESCRIPTIONS

A0-A18	Address Inputs
$\overline{CE}$	Chip Enable 1 Input
$\overline{OE}$	Output Enable Input
$\overline{WE}$	Write Enable Input
I/O0-I/O7	Input/Output
V_{DD}	Power
GND	Ground

DC ELECTRICAL CHARACTERISTICS (Over Operating Range)

V_{DD} = 3.3V ± 5%

Symbol	Parameter	Test Conditions	Min.	Max.	Unit
V_{OH}	Output HIGH Voltage	V_{DD} = Min., I_{OH} = –4.0 mA	2.4	—	V
V_{OL}	Output LOW Voltage	V_{DD} = Min., I_{OL} = 8.0 mA	—	0.4	V
V_{IH}	Input HIGH Voltage		2	V_{DD} + 0.3	V
V_{IL}	Input LOW Voltage(1)		–0.3	0.8	V
I_{LI}	Input Leakage	GND ≤ V_{IN} ≤ V_{DD}	–1	1	µA
I_{LO}	Output Leakage	GND ≤ V_{OUT} ≤ V_{DD}, Outputs Disabled	–1	1	µA

Note:
1. V_{IL} (min.) = –0.3V DC; V_{IL} (min.) = –2.0V AC (pulse width <10 ns). Not 100% tested.
   V_{IH} (max.) = V_{DD} + 0.3V DC; V_{IH} (max.) = V_{DD} + 2.0V AC (pulse width <10 ns). Not 100% tested.

DC ELECTRICAL CHARACTERISTICS (Over Operating Range)

V_{DD} = 2.4V-3.6V

Symbol	Parameter	Test Conditions	Min.	Max.	Unit
V_{OH}	Output HIGH Voltage	V_{DD} = Min., I_{OH} = –1.0 mA	1.8	—	V
V_{OL}	Output LOW Voltage	V_{DD} = Min., I_{OL} = 1.0 mA	—	0.4	V
V_{IH}	Input HIGH Voltage		2.0	V_{DD} + 0.3	V
V_{IL}	Input LOW Voltage(1)		–0.3	0.8	V
I_{LI}	Input Leakage	GND ≤ V_{IN} ≤ V_{DD}	–1	1	µA
I_{LO}	Output Leakage	GND ≤ V_{OUT} ≤ V_{DD}, Outputs Disabled	–1	1	µA

Note:
1. V_{IL} (min.) = –0.3V DC; V_{IL} (min.) = –2.0V AC (pulse width <10 ns). Not 100% tested.
   V_{IH} (max.) = V_{DD} + 0.3V DC; V_{IH} (max.) = V_{DD} + 2.0V AC (pulse width <10 ns). Not 100% tested.

DC ELECTRICAL CHARACTERISTICS (Over Operating Range)

V_{DD} = 1.65V-2.2V

Symbol	Parameter	Test Conditions	Min.	Max.	Unit
V_{OH}	Output HIGH Voltage	V_{DD} = Min, I_{OH} = -0.1 mA	1.4	—	V
V_{OL}	Output LOW Voltage	V_{DD} = Min, I_{OL} = 0.1 mA	—	0.2	V
V_{IH}	Input HIGH Voltage		1.4	V_{DD} + 0.2	V
V_{IL}(1)	Input LOW Voltage		–0.2	0.4	V
I_{LI}	Input Leakage	GND ≤ V_{IN} ≤ V_{DD}	–1	1	µA
I_{LO}	Output Leakage	GND ≤ V_{OUT} ≤ V_{DD}, Outputs Disabled	–1	1	µA

Note:
1. V_{IL} (min.) = –0.3V DC; V_{IL} (min.) = –2.0V AC (pulse width <10 ns). Not 100% tested.
   V_{IH} (max.) = V_{DD} + 0.3V DC; V_{IH} (max.) = V_{DD} + 2.0V AC (pulse width <10 ns). Not 100% tested.

TRUTH TABLE

Mode	$\overline{WE}$	$\overline{CE}$	$\overline{OE}$	I/O Operation	V_{DD} Current
Not Selected (Power-down)	X	H	X	High-Z	I_{SB1}, I_{SB2}
Output Disabled	H	L	H	High-Z	I_{CC}
Read	H	L	L	D_{OUT}	I_{CC}
Write	L	L	X	D_{IN}	I_{CC}

ABSOLUTE MAXIMUM RATINGS(1)

Symbol	Parameter	Value	Unit
V_{TERM}	Terminal Voltage with Respect to GND	–0.5 to V_{DD} + 0.5	V
V_{DD}	V_{DD} Relates to GND	–0.3 to 4.0	V
T_{STG}	Storage Temperature	–65 to +150	°C
P_T	Power Dissipation	1.0	W

Notes:
1. Stress greater than those listed under ABSOLUTE MAXIMUM RATINGS may cause permanent damage to the device. This is a stress rating only and functional operation of the device at these or any other conditions above those indicated in the operational sections of this specification is not implied. Exposure to absolute maximum rating conditions for extended periods may affect reliability.

CAPACITANCE(1,2)

Symbol	Parameter	Conditions	Max.	Unit
C_{IN}	Input Capacitance	V_{IN} = 0V	6	pF
$C_{I/O}$	Input/Output Capacitance	V_{OUT} = 0V	8	pF

Notes:
1. Tested initially and after any design or process changes that may affect these parameters.
2. Test conditions: T_A = 25°C, f = 1 MHz, V_{DD} = 3.3V.

HIGH SPEED (IS61WV5128ALL/BLL)

OPERATING RANGE (V_{DD}) (IS61WV5128ALL)

Range	Ambient Temperature	V_{DD}	Speed
Commercial	0°C to +70°C	1.65V-2.2V	20ns
Industrial	–40°C to +85°C	1.65V-2.2V	20ns
Automotive	–40°C to +125°C	1.65V-2.2V	20ns

OPERATING RANGE (V_{DD}) (IS61WV5128BLL)(1)

Range	Ambient Temperature	V_{DD} (8 ns)[1]	V_{DD} (10 ns)[1]
Commercial	0°C to +70°C	3.3V ± 5%	2.4V-3.6V
Industrial	–40°C to +85°C	3.3V ± 5%	2.4V-3.6V

Note:
1. When operated in the range of 2.4V-3.6V, the device meets 10ns. When operated in the range of 3.3V ± 5%, the device meets 8ns.

OPERATING RANGE (V_{DD}) (IS64WV5128BLL)

Range	Ambient Temperature	V_{DD} (10 ns)
Automotive	–40°C to +125°C	2.4V-3.6V

POWER SUPPLY CHARACTERISTICS(1) (Over Operating Range)

				-8		-10		-20		
Symbol	Parameter	Test Conditions		Min.	Max.	Min.	Max.	Min.	Max.	Unit
I_{CC}	V_{DD} Dynamic Operating Supply Current	V_{DD} = Max., I_{OUT} = 0 mA, f = f_{MAX}	Com.	—	50	—	40	—	40	mA
			Ind.	—	55	—	45	—	45	
			Auto.	—	—	—	65	—	65	
			typ.(2)			25				
I_{CC1}	Operating Supply Current	V_{DD} = Max., I_{OUT} = 0 mA, f = 0	Com.	—	35	—	35	—	30	mA
			Ind.	—	40	—	40	—	40	
			Auto.	—	—	—	60	—	60	
I_{SB1}	TTL Standby Current (TTL Inputs)	V_{DD} = Max., V_{IN} = V_{IH} or V_{IL} $\overline{CE}$ ≥ V_{IH}, f = 0	Com.	—	10	—	10	—	10	mA
			Ind.	—	15	—	15	—	15	
			Auto.	—	—	—	30	—	30	
I_{SB2}	CMOS Standby Current (CMOS Inputs)	V_{DD} = Max., $\overline{CE}$ ≥ V_{DD} – 0.2V, V_{IN} ≥ V_{DD} – 0.2V, or V_{IN} ≤ 0.2V, f = 0	Com.	—	7	—	7	—	7	mA
			Ind.	—	10	—	10	—	10	
			Auto.	—	—	—	20	—	20	
			typ.(2)			2				

Note:
1. At f = f_{MAX}, address and data inputs are cycling at the maximum frequency, f = 0 means no input lines change.
2. Typical values are measured at V_{DD} = 3.0V, T_A = 25°C and not 100% tested.

LOW POWER (IS61WV5128ALS/BLS)

OPERATING RANGE (V_{DD}) (IS61WV5128ALS)

Range	Ambient Temperature	V_{DD}	Speed
Commercial	0°C to +70°C	1.65V-2.2V	35ns
Industrial	–40°C to +85°C	1.65V-2.2V	35ns
Automotive	–40°C to +125°C	1.65V-2.2V	35ns

OPERATING RANGE (V_{DD}) (IS61WV5128BLS)[1]

Range	Ambient Temperature	V_{DD}	Speed
Commercial	0°C to +70°C	2.4V-3.6V	25 ns
Industrial	–40°C to +85°C	2.4V-3.6V	25 ns

OPERATING RANGE (V_{DD}) (IS64WV5128BLS)

Range	Ambient Temperature	V_{DD}	Speed
Automotive	–40°C to +125°C	2.4V-3.6V	35 ns

POWER SUPPLY CHARACTERISTICS[1] (Over Operating Range)

				-25		-35		
Symbol	Parameter	Test Conditions		Min.	Max.	Min.	Max.	Unit
I_{CC}	V_{DD} Dynamic Operating Supply Current	V_{DD} = Max., I_{OUT} = 0 mA, f = f_{MAX}	Com.	—	20	—	20	mA
			Ind.	—	25	—	25	
			Auto.	—	50	—	50	
			typ.[2]	11				
I_{CC1}	Operating Supply Current	V_{DD} = Max., I_{OUT} = 0 mA, f = 0	Com.	—	10	—	10	mA
			Ind.	—	12	—	12	
			Auto.	—	20	—	20	
I_{SB1}	TTL Standby Current (TTL Inputs)	V_{DD} = Max., V_{IN} = V_{IH} or V_{IL} $\overline{CE} \geq V_{IH}$, f = 0	Com.	—	5	—	5	mA
			Ind.	—	7	—	7	
			Auto.	—	10	—	10	
I_{SB2}	CMOS Standby Current (CMOS Inputs)	V_{DD} = Max., $\overline{CE} \geq V_{DD}$ – 0.2V, $V_{IN} \geq V_{DD}$ – 0.2V, or $V_{IN} \leq$ 0.2V, f = 0	Com.	—	1	—	1	mA
			Ind.	—	2	—	2	
			Auto.	—	10	—	10	
			typ.[2]	0.2				

Note:

1. At f = f_{MAX}, address and data inputs are cycling at the maximum frequency, f = 0 means no input lines change.
2. Typical values are measured at V_{DD} = 3.0V, T_A = 25°C and not 100% tested.

AC TEST CONDITIONS

Parameter	Unit (2.4V-3.6V)	Unit (3.3V ± 10%)	Unit (1.65V-2.2V)
Input Pulse Level	0V to 3V	0V to 3V	0V to 1.8V
Input Rise and Fall Times	1V/ ns	1V/ ns	1V/ ns
Input and Output Timing and Reference Level (V_{Ref})	1.5V	1.5V	0.9V
Output Load	See Figures 1 and 2	See Figures 1 and 2	See Figures 1 and 2

AC TEST LOADS

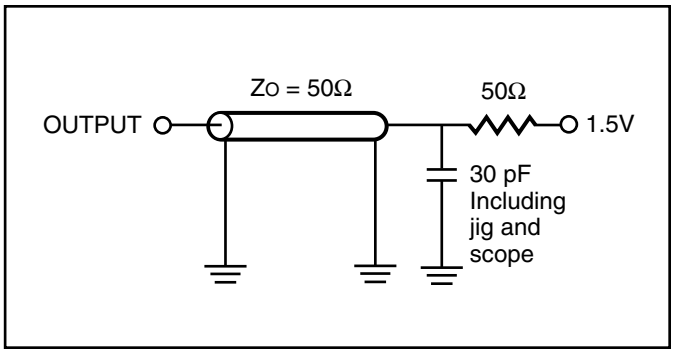

Figure 1.

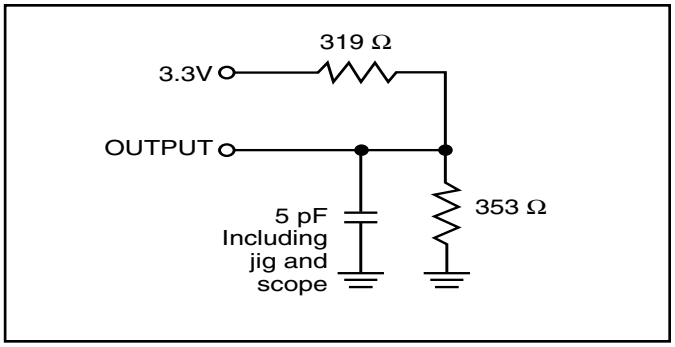

Figure 2.

READ CYCLE SWITCHING CHARACTERISTICS(1) (Over Operating Range)

Symbol	Parameter	-8 Min.	-8 Max.	-10 Min.	-10 Max.	Unit
t_{RC}	Read Cycle Time	8	—	10	—	ns
t_{AA}	Address Access Time	—	8	—	10	ns
t_{OHA}	Output Hold Time	2.0	—	2.0	—	ns
t_{ACE}	$\overline{CE}$ Access Time	—	8	—	10	ns
t_{DOE}	$\overline{OE}$ Access Time	—	4.5	—	4.5	ns
t_{HZOE}(2)	$\overline{OE}$ to High-Z Output	—	3	—	4	ns
t_{LZOE}(2)	$\overline{OE}$ to Low-Z Output	0	—	0	—	ns
t_{HZCE}(2	$\overline{CE}$ to High-Z Output	0	3	0	4	ns
t_{LZCE}(2)	$\overline{CE}$ to Low-Z Output	3	—	3	—	ns
t_{PU}	Power Up Time	0	—	0	—	ns
t_{PD}	Power Down Time	—	8	—	10	ns

Notes:

1. Test conditions assume signal transition times of 3 ns or less, timing reference levels of 1.5V, input pulse levels of 0V to 3.0V and output loading specified in Figure 1.
2. Tested with the load in Figure 2. Transition is measured ±500 mV from steady-state voltage.

READ CYCLE SWITCHING CHARACTERISTICS[1] (Over Operating Range)

Symbol	Parameter	-20 ns Min.	-20 ns Max.	-25 ns Min.	-25 ns Max.	-35 ns Min.	-35 ns Max.	Unit
t_{RC}	Read Cycle Time	20	—	25	—	35	—	ns
t_{AA}	Address Access Time	—	20	—	25	—	35	ns
t_{OHA}	Output Hold Time	2.5	—	4	—	4	—	ns
t_{ACE}	$\overline{CE}$ Access Time	—	20	—	25	—	35	ns
t_{DOE}	$\overline{OE}$ Access Time	—	8	—	12	—	15	ns
t_{HZOE}[2]	$\overline{OE}$ to High-Z Output	0	8	0	8	0	10	ns
t_{LZOE}[2]	$\overline{OE}$ to Low-Z Output	0	—	0	—	0	—	ns
t_{HZCE}[2	$\overline{CE}$ to High-Z Output	0	8	0	8	0	10	ns
t_{LZCE}[2]	$\overline{CE}$ to Low-Z Output	3	—	10	—	10	—	ns
t_{PU}	Power Up Time	0	—	0	—	0	—	ns
t_{PD}	Power Down Time	—	20	—	25	—	35	ns

Notes:
1. Test conditions assume signal transition times of 1.5 ns or less, timing reference levels of 1.25V, input pulse levels of 0.4V to V_{DD}-0.3V and output loading specified in Figure 1a.
2. Tested with the load in Figure 1b. Transition is measured ±500 mV from steady-state voltage. Not 100% tested.
3. Not 100% tested.

AC WAVEFORMS

READ CYCLE NO. 1[1,2] (Address Controlled) ($\overline{CE}$ = $\overline{OE}$ = V_{IL})

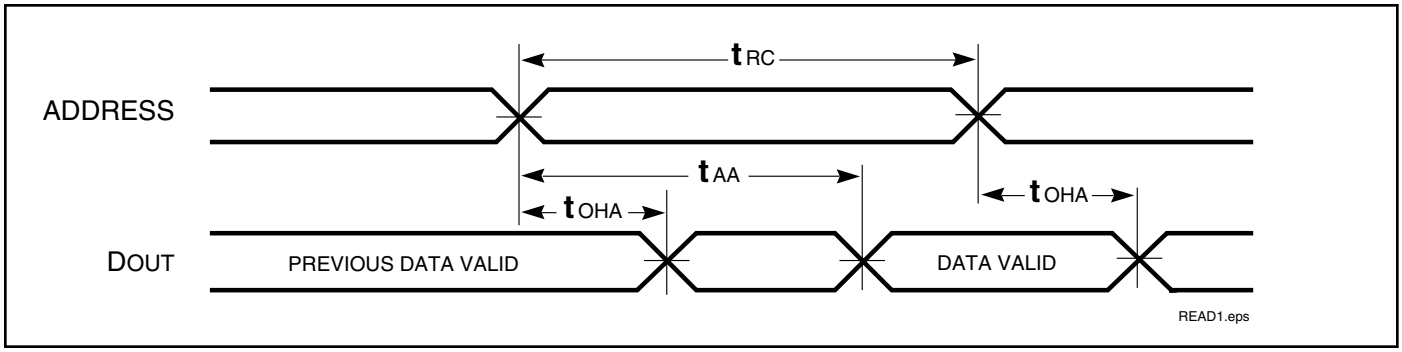

READ CYCLE NO. 2[1,3] ($\overline{CE}$ and $\overline{OE}$ Controlled)

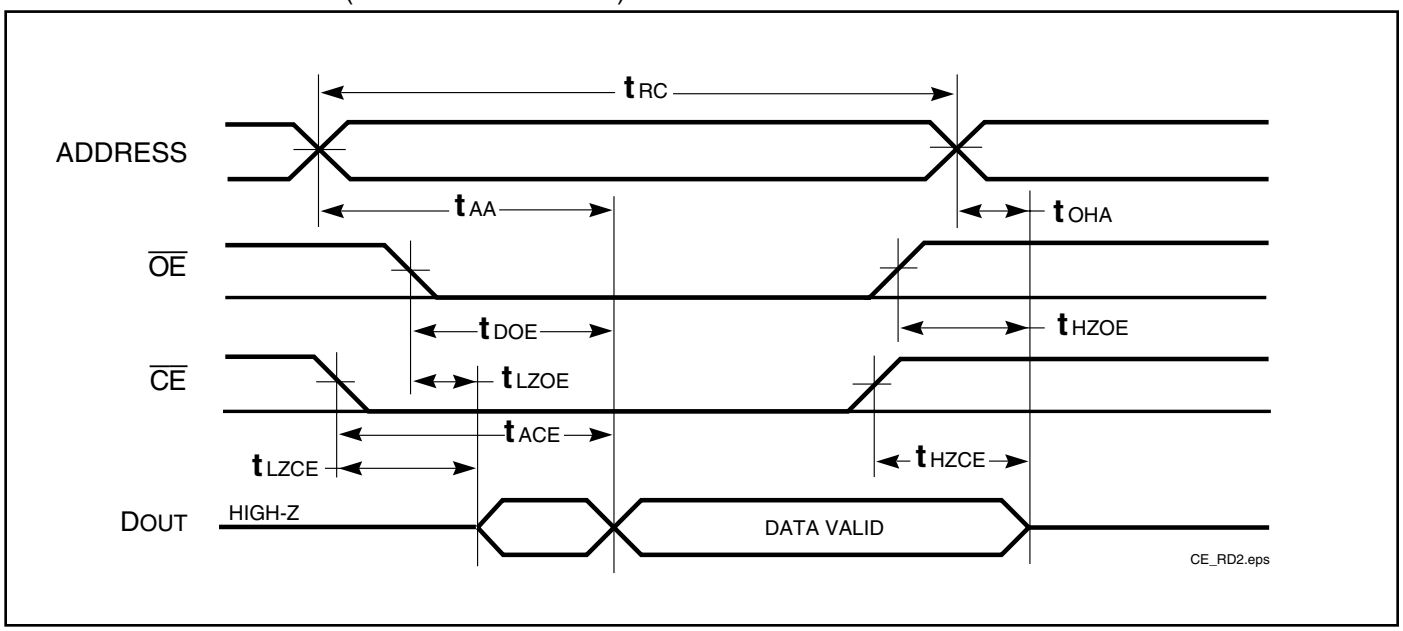

Notes:
1. $\overline{WE}$ is HIGH for a Read Cycle.
2. The device is continuously selected. $\overline{OE}$, $\overline{CE}$ = V_{IL}.
3. Address is valid prior to or coincident with $\overline{CE}$ LOW transitions.

WRITE CYCLE SWITCHING CHARACTERISTICS[1,3] (Over Operating Range)

Symbol	Parameter	-8 Min.	-8 Max.	-10 Min.	-10 Max.	Unit
t_{WC}	Write Cycle Time	8	—	10	—	ns
t_{SCE}	$\overline{CE}$ to Write End	6.5	—	8	—	ns
t_{AW}	Address Setup Time to Write End	6.5	—	8	—	ns
t_{HA}	Address Hold from Write End	0	—	0	—	ns
t_{SA}	Address Setup Time	0	—	0	—	ns
t_{PWE1}	$\overline{WE}$ Pulse Width ($\overline{OE}$ = HIGH)	6.5	—	8	—	ns
t_{PWE2}	$\overline{WE}$ Pulse Width ($\overline{OE}$ = LOW)	8.0	—	10	—	ns
t_{SD}	Data Setup to Write End	5	—	6	—	ns
t_{HD}	Data Hold from Write End	0	—	0	—	ns
t_{HZWE}[2]	$\overline{WE}$ LOW to High-Z Output	—	3.5	—	5	ns
t_{LZWE}[2]	$\overline{WE}$ HIGH to Low-Z Output	2	—	2	—	ns

Notes:

1. Test conditions assume signal transition times of 3 ns or less, timing reference levels of 1.5V, input pulse levels of 0V to 3.0V and output loading specified in Figure 1.
2. Tested with the load in Figure 2. Transition is measured ±500 mV from steady-state voltage. Not 100% tested.
3. The internal write time is defined by the overlap of $\overline{CE}$ LOW and $\overline{WE}$ LOW. All signals must be in valid states to initiate a Write, but any one can go inactive to terminate the Write. The Data Input Setup and Hold timing are referenced to the rising or falling edge of the signal that terminates the write. Shaded area product in development

WRITE CYCLE SWITCHING CHARACTERISTICS[1,2] (Over Operating Range)

		-20 ns		-25 ns		-35 ns		
Symbol	**Parameter**	**Min.**	**Max.**	**Min.**	**Max.**	**Min.**	**Max.**	**Unit**
t_{WC}	Write Cycle Time	20	—	25	—	35	—	ns
t_{SCE}	$\overline{CE}$ to Write End	12	—	18	—	25	—	ns
t_{AW}	Address Setup Time to Write End	12	—	15	—	25	—	ns
t_{HA}	Address Hold from Write End	0	—	0	—	0	—	ns
t_{SA}	Address Setup Time	0	—	0	—	0	—	ns
t_{PWE1}	$\overline{WE}$ Pulse Width ($\overline{OE}$ = HIGH)	12	—	18	—	30	—	ns
t_{PWE2}	$\overline{WE}$ Pulse Width ($\overline{OE}$ = LOW)	17	—	20	—	30	—	ns
t_{SD}	Data Setup to Write End	9	—	12	—	15	—	ns
t_{HD}	Data Hold from Write End	0	—	0	—	0	—	ns
t_{HZWE}[3]	$\overline{WE}$ LOW to High-Z Output	—	9	—	12	—	20	ns
t_{LZWE}[3]	$\overline{WE}$ HIGH to Low-Z Output	3	—	5	—	5	—	ns

Notes:
1. Test conditions for IS61WV6416LL assume signal transition times of 1.5ns or less, timing reference levels of 1.25V, input pulse levels of 0.4V to V_{DD}-0.3V and output loading specified in Figure 1a.
2. Tested with the load in Figure 1b. Transition is measured ±500 mV from steady-state voltage. Not 100% tested.
3. The internal write time is defined by the overlap of $\overline{CE}$ LOW and $\overline{WE}$ LOW. All signals must be in valid states to initiate a Write, but any one can go inactive to terminate the Write. The Data Input Setup and Hold timing are referenced to the rising or falling edge of the signal that terminates the write.

AC WAVEFORMS

WRITE CYCLE NO. 1[1,2] ($\overline{CE}$ Controlled, $\overline{OE}$ = HIGH or LOW)

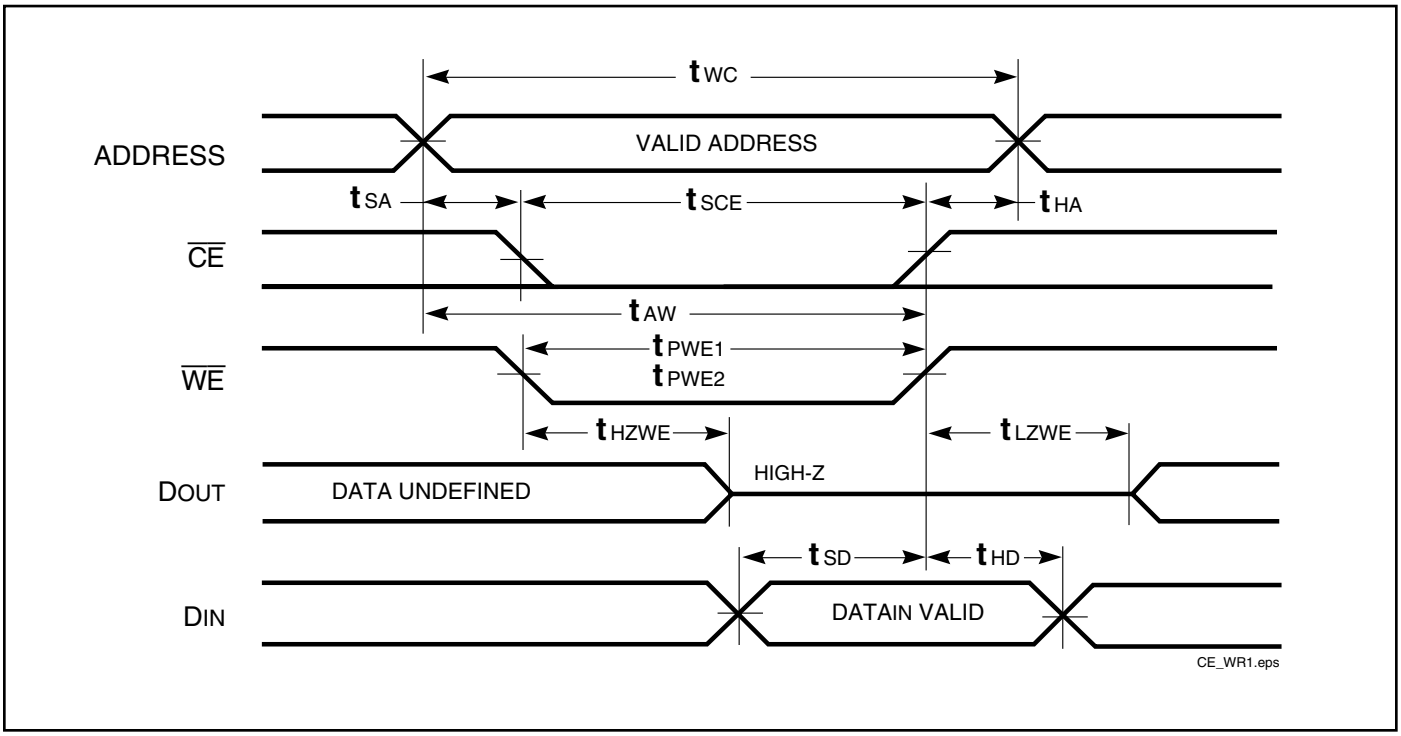

WRITE CYCLE NO. 2[1,2] ($\overline{WE}$ Controlled: $\overline{OE}$ is HIGH During Write Cycle)

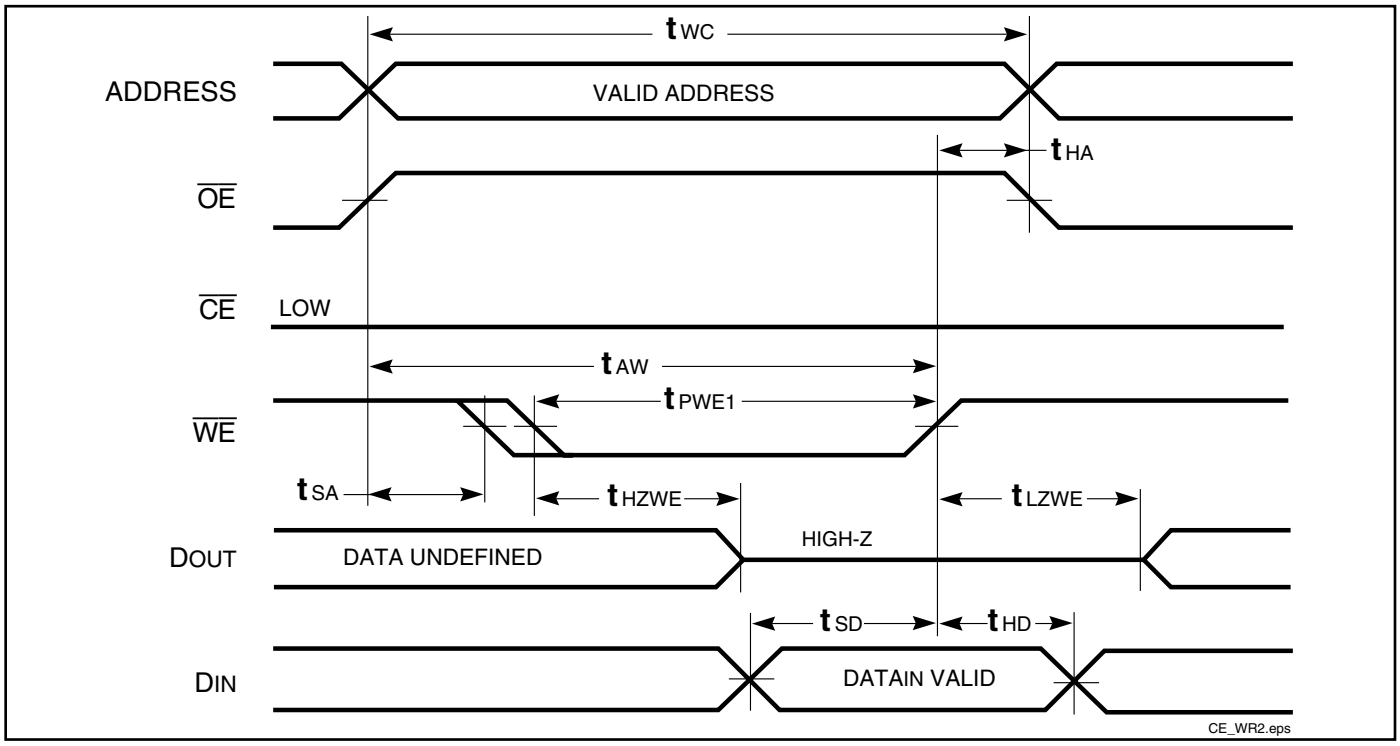

Notes:

1. The internal write time is defined by the overlap of $\overline{CE}$ LOW and $\overline{WE}$ LOW. All signals must be in valid states to initiate a Write, but any one can go inactive to terminate the Write. The Data Input Setup and Hold timing are referenced to the rising or falling edge of the signal that terminates the Write.
2. I/O will assume the High-Z state if $\overline{OE}$ > V_{IH}.

WRITE CYCLE NO. 3 ($\overline{WE}$ Controlled: $\overline{OE}$ is LOW During Write Cycle)

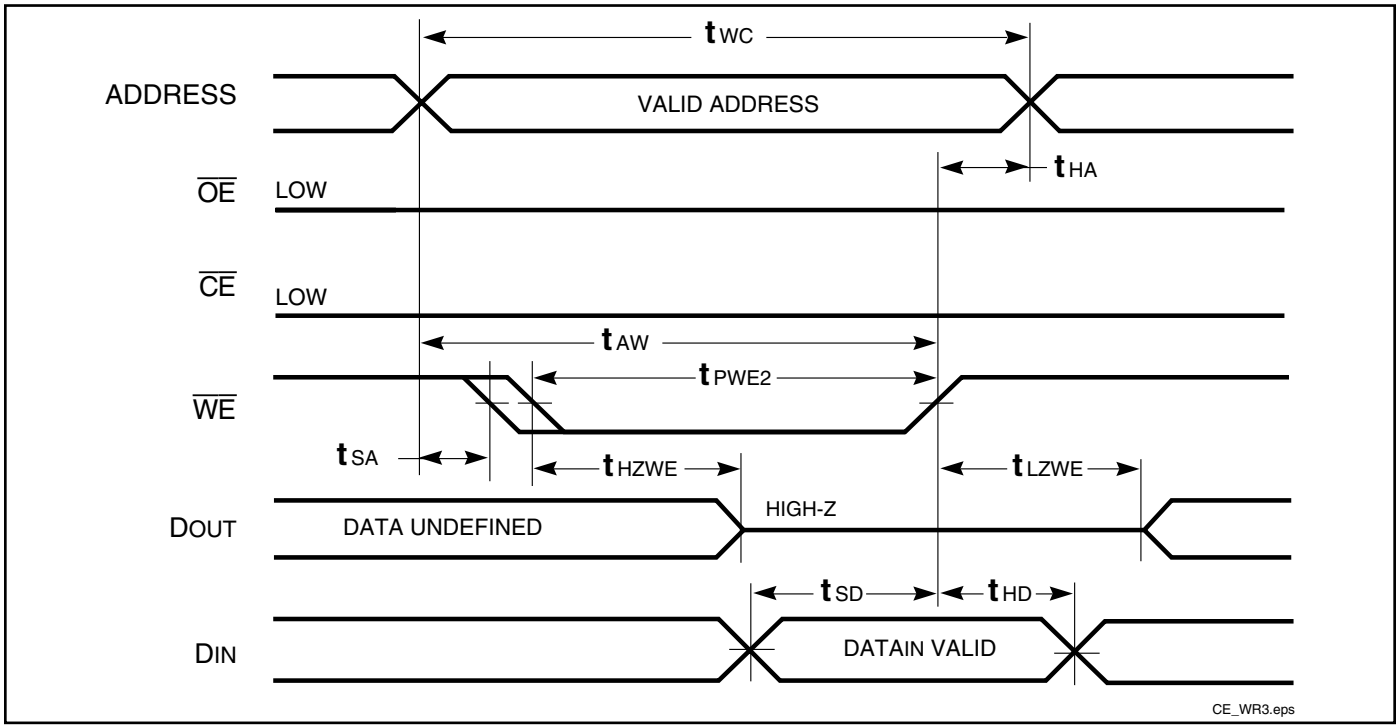

HIGH SPEED (IS61WV5128ALL/BLL)

DATA RETENTION SWITCHING CHARACTERISTICS (2.4V-3.6V)

Symbol	Parameter	Test Condition	Options	Min.	Typ.(1)	Max.	Unit
V_{DR}	V_{DD} for Data Retention	See Data Retention Waveform		2.0	—	3.6	V
I_{DR}	Data Retention Current	V_{DD} = 2.0V, $\overline{CE} \geq V_{DD} - 0.2V$	Com.	—	2	6	mA
			Ind.	—	—	8	
			Auto.			15	
t_{SDR}	Data Retention Setup Time	See Data Retention Waveform		0	—	—	ns
t_{RDR}	Recovery Time	See Data Retention Waveform		t_{RC}	—	—	ns

Note 1: Typical values are measured at V_{DD} = 3.0V, T_A = 25°C and not 100% tested.

DATA RETENTION SWITCHING CHARACTERISTICS (1.65V-2.2V)

Symbol	Parameter	Test Condition	Options	Min.	Typ.(1)	Max.	Unit
V_{DR}	V_{DD} for Data Retention	See Data Retention Waveform		1.2	—	3.6	V
I_{DR}	Data Retention Current	V_{DD} = 1.2V, $\overline{CE} \geq V_{DD} - 0.2V$	Com.	—	2	6	mA
			Ind.	—	—	8	
t_{SDR}	Data Retention Setup Time	See Data Retention Waveform		0	—	—	ns
t_{RDR}	Recovery Time	See Data Retention Waveform		t_{RC}	—	—	ns

Note 1: Typical values are measured at V_{DD} = 1.8V, T_A = 25°C and not 100% tested.

DATA RETENTION WAVEFORM ($\overline{CE}$ Controlled)

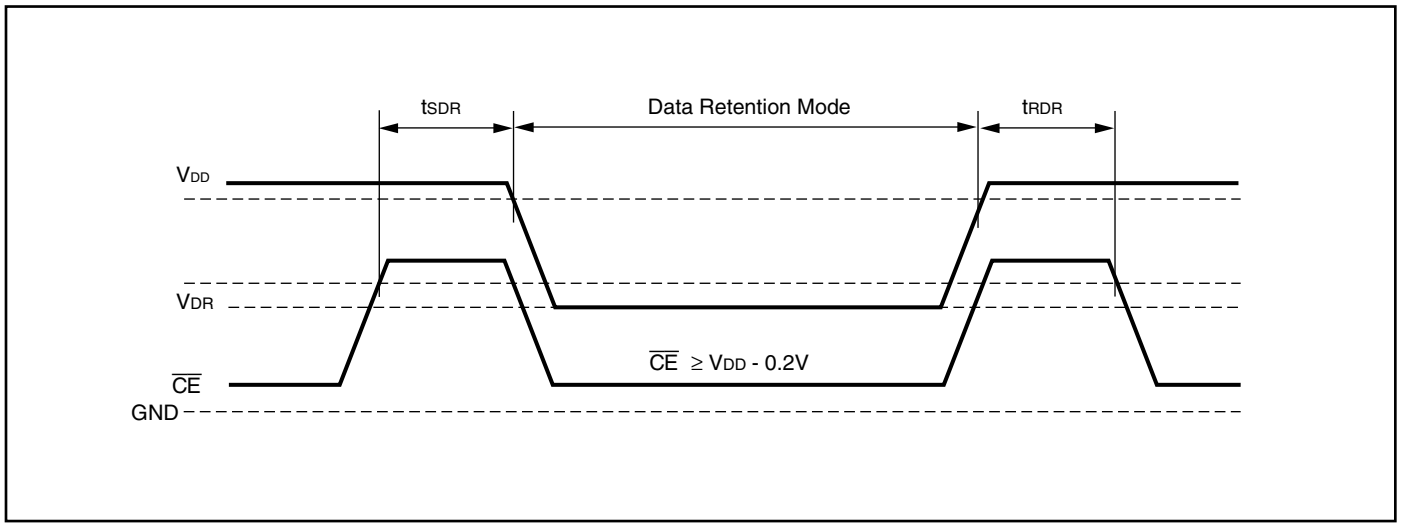

LOW POWER (IS61WV5128ALS/BLS)

DATA RETENTION SWITCHING CHARACTERISTICS (2.4V-3.6V)

Symbol	Parameter	Test Condition	Options	Min.	Typ.(1)	Max.	Unit
V_{DR}	V_{DD} for Data Retention	See Data Retention Waveform		2.0	—	3.6	V
I_{DR}	Data Retention Current	V_{DD} = 2.0V, $\overline{CE} \geq V_{DD} - 0.2V$	Com.	—	0.2	1	mA
			Ind.	—	—	2	
			Auto.			10	
t_{SDR}	Data Retention Setup Time	See Data Retention Waveform		0	—	—	ns
t_{RDR}	Recovery Time	See Data Retention Waveform		t_{RC}	—	—	ns

Note 1: Typical values are measured at V_{DD} = 3.0V, T_A = 25°C and not 100% tested.

DATA RETENTION SWITCHING CHARACTERISTICS (1.65V-2.2V)

Symbol	Parameter	Test Condition	Options	Min.	Typ.(1)	Max.	Unit
V_{DR}	V_{DD} for Data Retention	See Data Retention Waveform		1.2	—	3.6	V
I_{DR}	Data Retention Current	V_{DD} = 1.2V, $\overline{CE} \geq V_{DD} - 0.2V$	Com.	—	0.2	1	mA
			Ind.	—	—	2	
t_{SDR}	Data Retention Setup Time	See Data Retention Waveform		0	—	—	ns
t_{RDR}	Recovery Time	See Data Retention Waveform		t_{RC}	—	—	ns

Note 1: Typical values are measured at V_{DD} = 1.8V, T_A = 25°C and not 100% tested.

DATA RETENTION WAVEFORM ($\overline{CE}$ Controlled)

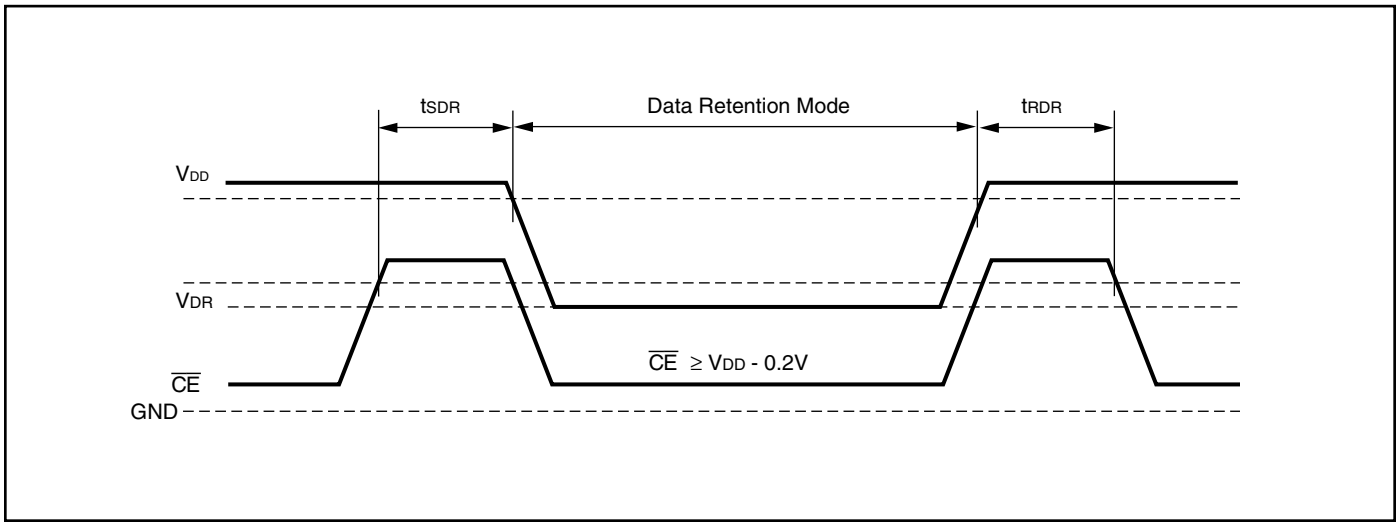

ORDERING INFORMATION (HIGH SPEED)

Commercial Range: 0°C to +70°C
Voltage Range: 2.4V to 3.6V

Speed (ns)	Order Part No.	Package
10 (8[1])	IS61WV5128BLL-10TL	TSOP (Type II), Lead-free

Note:
1. Speed = 8ns for V_{DD} = 3.3V ± 5%. Speed = 10ns for V_{DD} = 2.4V to 3.6V.

Industrial Range: -40°C to +85°C
Voltage Range: 2.4V to 3.6V

Speed (ns)	Order Part No.	Package
10 (8[1])	IS61WV5128BLL-10BI	36-ball mini BGA (6mm x 8mm)
	IS61WV5128BLL-10BLI	36-ball mini BGA (6mm x 8mm), Lead-free
	IS61WV5128BLL-10TI	TSOP (Type II)
	IS61WV5128BLL-10TLI	TSOP (Type II), Lead-free
	IS61WV5128BLL-10KLI	400-mil Plastic SOJ, Lead-free

Note:
1. Speed = 8ns for V_{DD} = 3.3V ± 5%. Speed = 10ns for V_{DD} = 2.4V to 3.6V.

Industrial Range: -40°C to +85°C
Voltage Range: 1.65V to 2.2V

Speed (ns)	Order Part No.	Package
20	IS61WV5128ALL-20BI	36-ball mini BGA (6mm x 8mm)
	IS61WV5128ALL-20TI	TSOP (Type II)

Automotive Range: -40°C to +125°C
Voltage Range: 2.4V to 3.6V

Speed (ns)	Order Part No.	Package
10	IS64WV5128BLL-10BA3	36-ball mini BGA (6mm x 8mm)
	IS64WV5128BLL-10BLA3	36-ball mini BGA (6mm x 8mm), Lead-free
	IS64WV5128BLL-10CTA3	TSOP (Type II), Copper Leadframe
	IS64WV5128BLL-10CTLA3	TSOP (Type II), Copper Leadframe Lead-free

ORDERING INFORMATION (LOW POWER)

Industrial Range: -40°C to +85°C

Voltage Range: 2.4V to 3.6V

Speed (ns)	Order Part No.	Package
25	IS61WV5128BLS-25TLI	TSOP (Type II), Lead-free

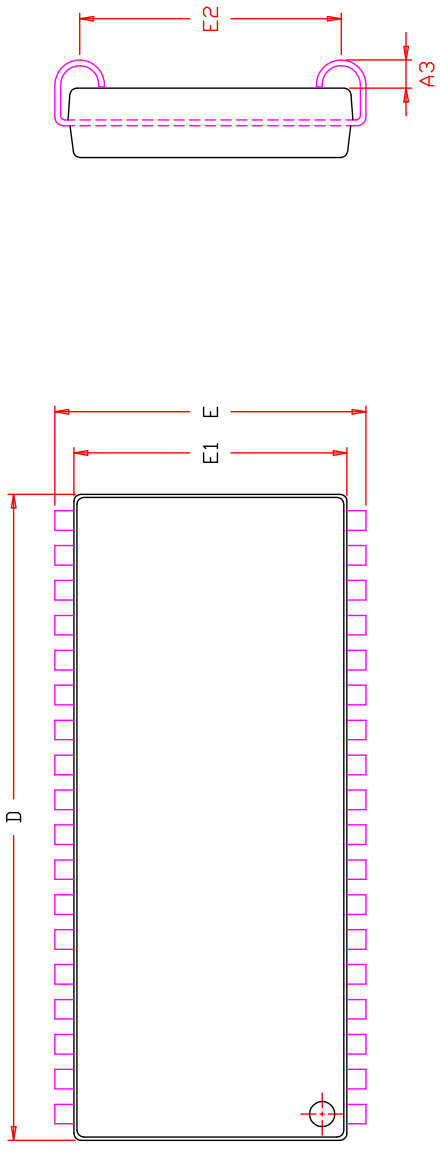

SYMBOL	DIMENSION IN MM			DIMENSION IN INCH		
	MIN.	NOM.	MAX.	MIN.	NOM.	MAX.
A	3.25	—	3.76	0.128	—	0.148
A1	2.08	—	—	0.082	—	—
A3	0.635	—	—	0.025	—	—
b	0.38	—	0.51	0.015	—	0.020
b2	0.66	0.71	0.81	0.026	0.028	0.032
D	23.36	23.49	23.62	0.920	0.925	0.930
E	11.05	11.18	11.30	0.435	0.440	0.445
E1	10.03	10.16	10.29	0.395	0.400	0.405
E2	9.40 BSC.			0.370 BSC.		
e	1.27 BSC.			0.050 BSC.		
ZD	0.95 REF.			0.037 REF.		

NOTE :

1. Controlling dimension : mm
2. Dimension D and E1 do not include mold protrusion .
3. Dimension b2 does not include dambar protrusion/intrusion.
4. Formed leads shall be planar with respect to one another within 0.1mm at the seating plane after final test.
5. Reference document : JEDEC SPEC MS-027.

TITLE	36L 400mil SOJ Package Outline	REV.	F	DATE	12/20/2007

SYMBOL	DIMENSION IN MM			DIMENSION IN INCH		
	MIN.	NOM.	MAX.	MIN.	NOM.	MAX.
A	—	—	1.20	—	—	0.047
A1	0.20	—	0.30	0.008	—	0.012
ø b	0.30	0.35	0.40	0.012	0.014	0.016
D	7.90	8.00	8.10	0.311	0.315	0.319
D1	5.25 BSC.			0.207 BSC.		
E	5.90	6.00	6.10	0.232	0.236	0.240
E1	3.75 BSC.			0.148 BSC.		
e	0.75 BSC.			0.030 BSC.		
ZD	1.375 REF.			0.054 REF.		
ZE	1.125 REF.			0.044 REF.		

NOTE :

1. CONTROLLING DIMENSION : MM .
2. Reference document : JEDEC MO-207

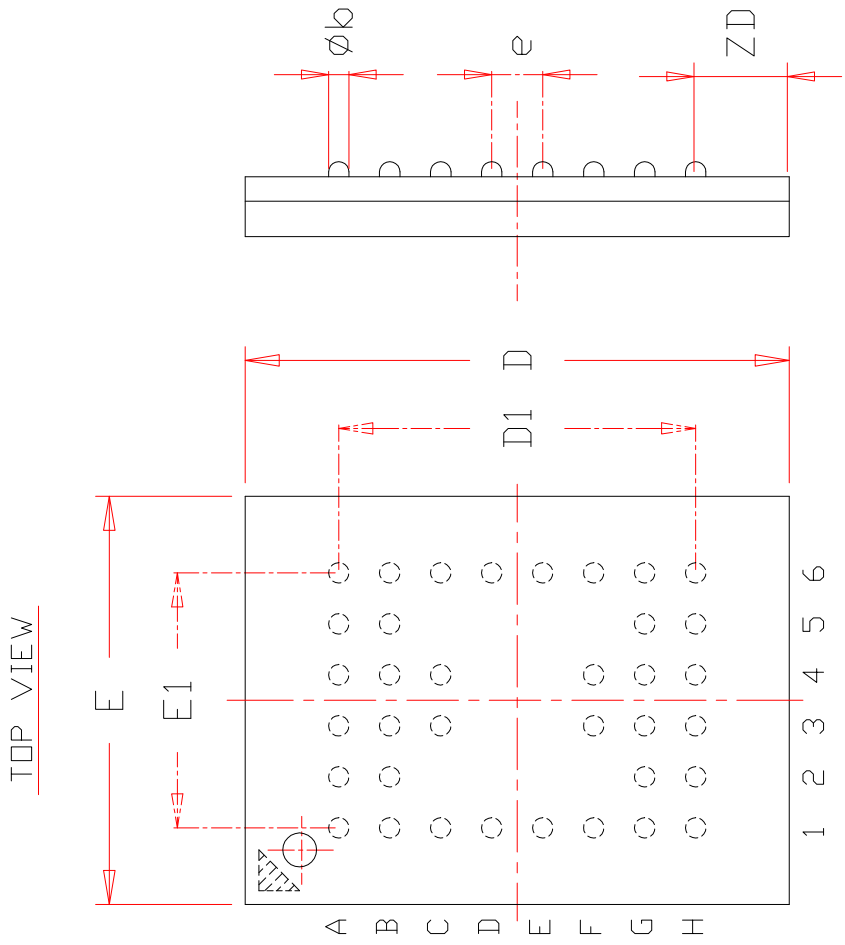

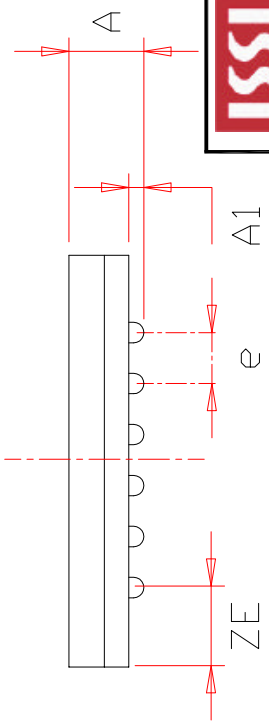

ISSI	TITLE	36/48L 6x8mm TF-BGA Package Outline	REV.	E	DATE	08/12/2008

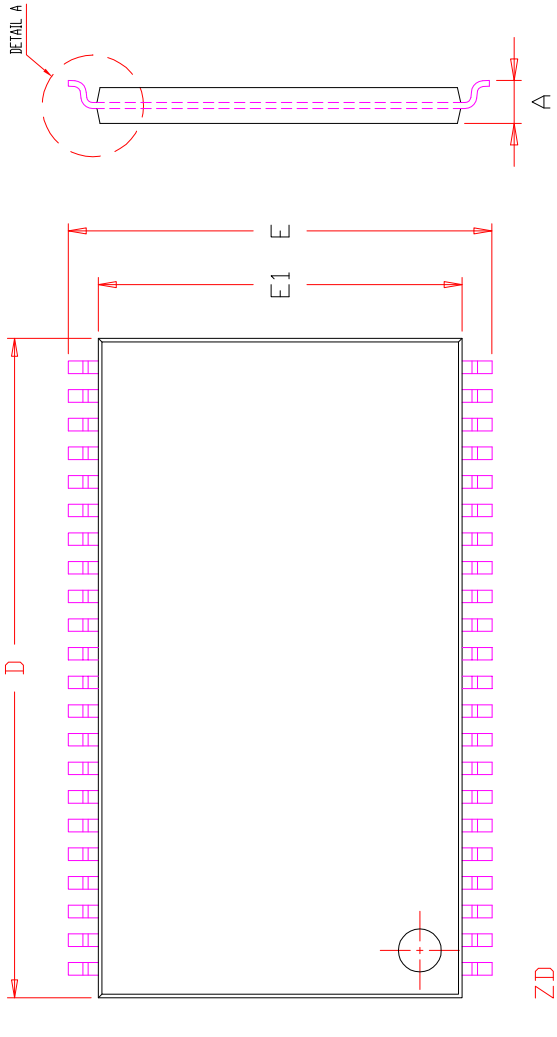

SYMBOL	DIMENSION IN MM			DIMENSION IN INCH		
	MIN.	NOM.	MAX.	MIN.	NOM.	MAX.
A	1.00	—	1.20	0.039	—	0.047
A1	0.05	—	0.15	0.002	—	0.006
A2	0.95	1.00	1.05	0.037	0.039	0.041
b	0.30	—	0.45	0.012	—	0.018
D	18.28	18.41	18.54	0.720	0.725	0.730
E	11.56	11.76	11.96	0.455	0.463	0.471
E1	10.03	10.16	10.29	0.395	0.400	0.405
e	0.80 BSC.			0.031 BSC.		
L	0.40	—	0.69	0.016	—	0.027
L1	0.25 BSC.			0.010 BSC.		
ZD	0.805 REF.			0.032 REF.		
θ	0	—	8°	0	—	8°

NOTE :

1. CONTROLLING DIMENSION : MM
2. DIMENSION D AND E1 DO NOT INCLUDE MOLD PROTRUSION.
3. DIMENSION b DOES NOT INCLUDE DAMBAR PROTRUSION/INTRUSION.

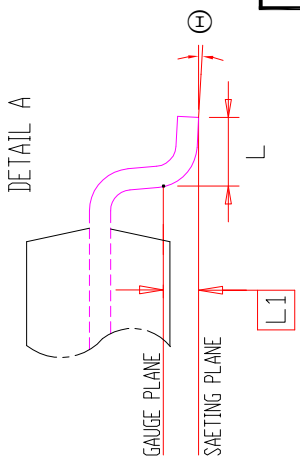

TITLE	44L 400mil TSOP-2 Package Outline	REV.	F	DATE	06/04/2008

SYMBOL	DIMENSION IN MM			DIMENSION IN INCH		
	MIN	NOM	MAX	MIN	NOM	MAX
A	0.95	—	1.25	0.037	—	0.049
A1	0.05	—	0.15	0.002	—	0.008
A2	0.90	—	1.05	0.035	—	0.041
b	0.16	—	0.27	0.006	—	0.011
D	13.10	13.40	13.70	0.516	0.528	0.539
D1	11.70	11.80	11.90	0.461	0.465	0.469
E	7.90	8.00	8.10	0.311	0.315	0.319
e	0.50 BSC.			0.020 BSC.		
L	0.30	0.50	0.70	0.012	0.020	0.028
L1	0.25 BSC.			0.010 BSC.		
ZD	0.25 REF.			0.010 REF.		
Θ	0	3°	5°	0	3°	5°

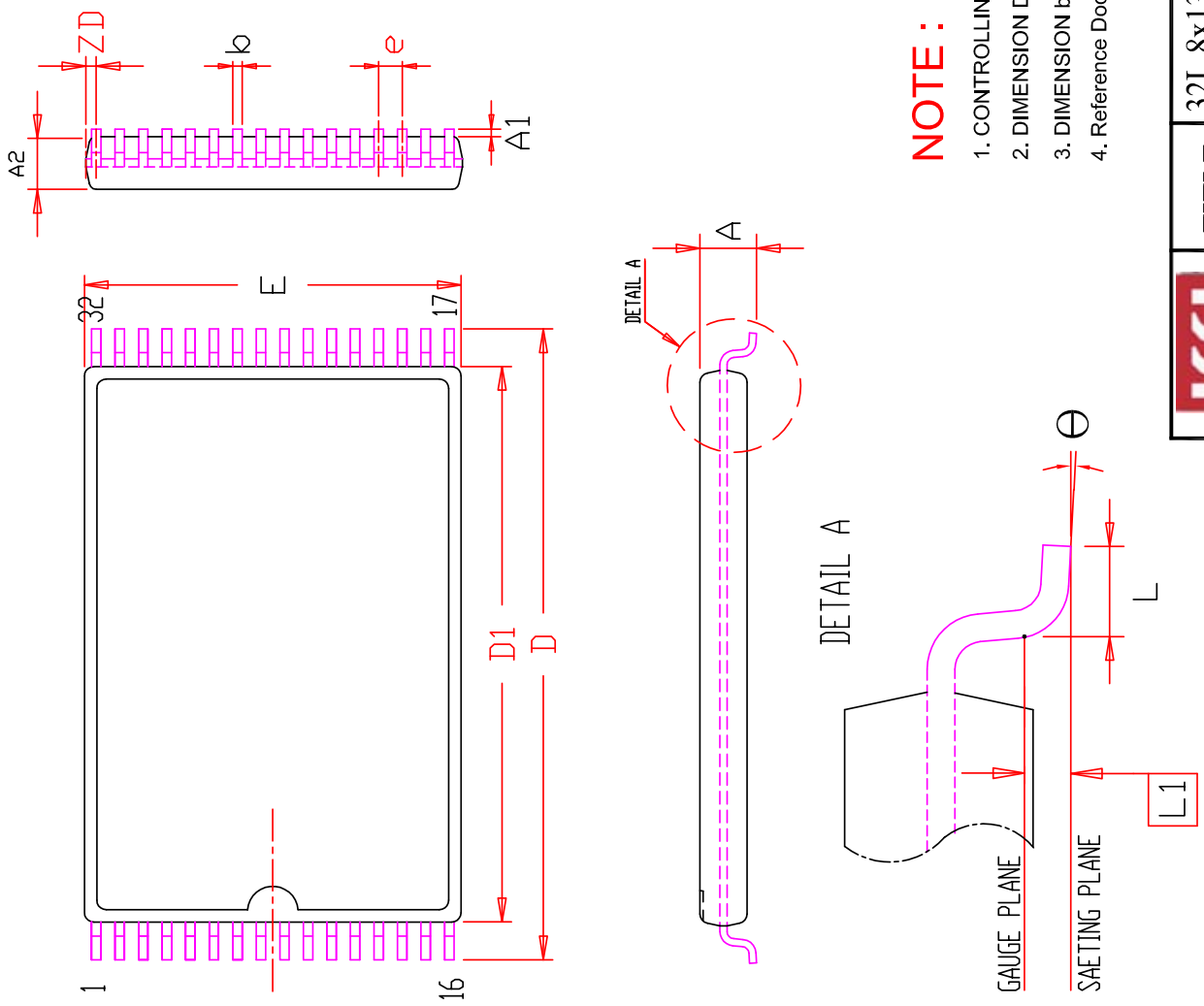

NOTE :

1. CONTROLLING DIMENSION : MM
2. DIMENSION D1 AND E DO NOT INCLUDE MOLD PROTRUSION.
3. DIMENSION b DOES NOT INCLUDE DAMBAR PROTRUSION/INTRUSION.
4. Reference Document : JEDEC MO-183

TITLE	32L 8x13.4mm TSOP-1 Package Outline	REV.	E	DATE	04/24/2009

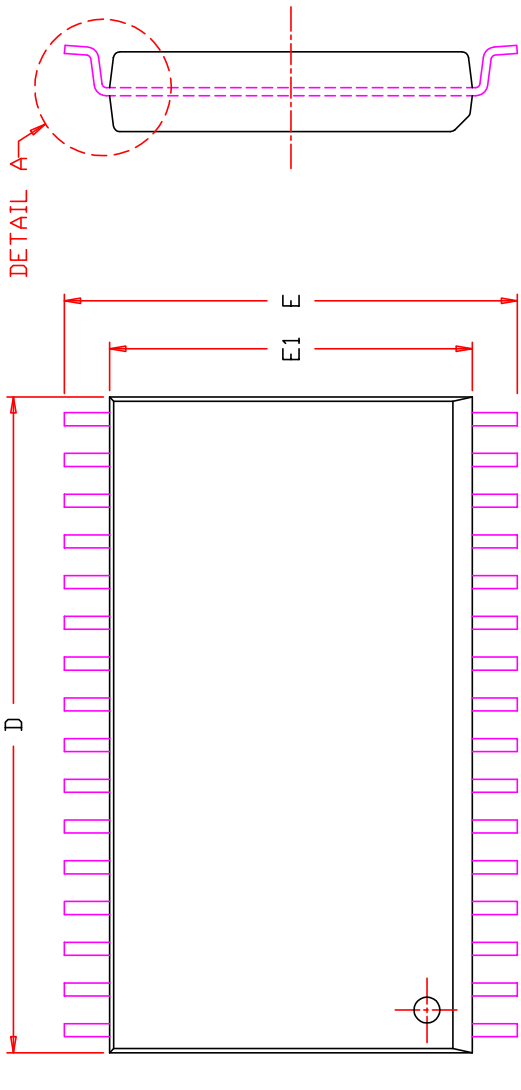

SYMBOL	DIMENSION IN MM			DIMENSION IN INCH		
	MIN.	NOM.	MAX.	MIN.	NOM.	MAX.
A	2.62	—	3.12	0.103	—	0.123
A1	0.05	—	0.30	0.002	—	0.012
b	0.33	—	0.51	0.013	—	0.020
D	20.24	—	20.75	0.797	—	0.817
E	13.79	—	14.45	0.543	—	0.569
E1	11.18	—	11.43	0.440	—	0.450
e	1.27 BSC.			0.050 BSC.		
L	0.38	—	1.27	0.015	—	0.050
L1	0.25 BSC.			0.010 BSC.		
ZD	0.725 REF.			0.029 REF.		
Θ	0	—	8°	0	—	8°

NOTE :

1. CONTROLLING DIMENSION : MM
2. DIMENSION D AND E1 DO NOT INCLUDE MOLD PROTRUSION.
3. DIMENSION b DOES NOT INCLUDE DAMBAR PROTRUSION/INTRUSION.

ISSI	TITLE	32L 450mil SOP Package Outline	REV.	D	DATE	04/20/2009

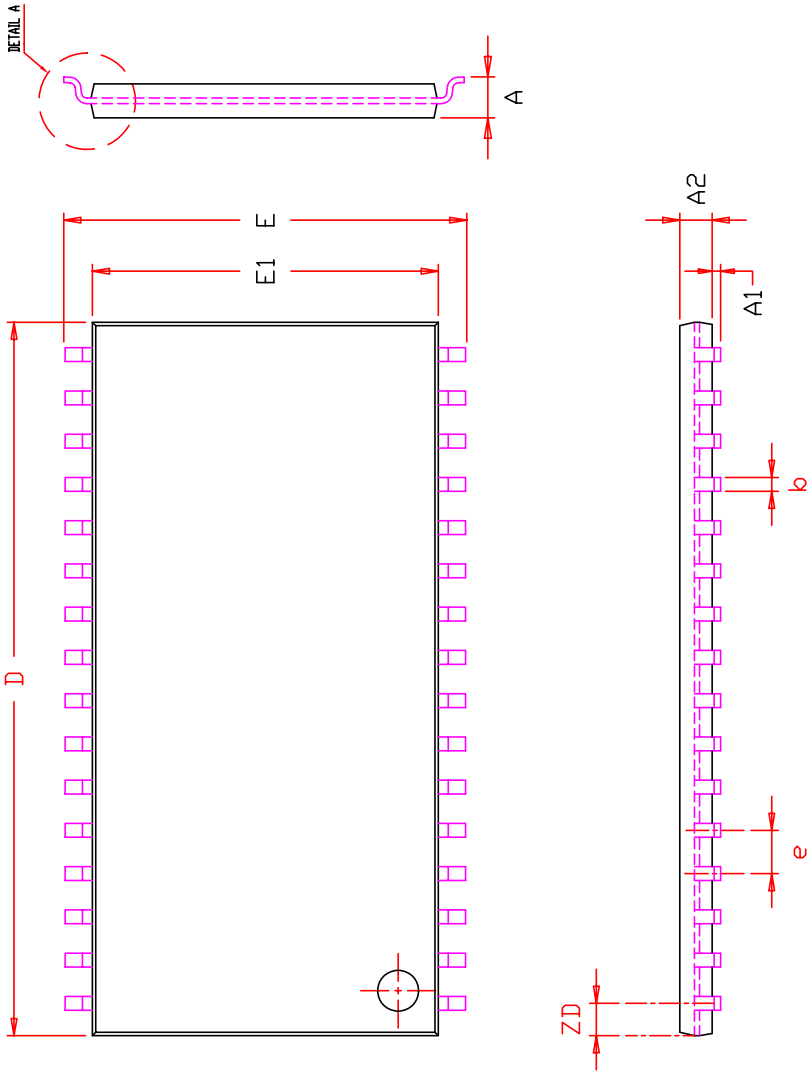

SYMBOL	DIMENSION IN MM			DIMENSION IN INCH		
	MIN.	NOM.	MAX.	MIN.	NOM.	MAX.
A	1.00	—	1.20	0.039	—	0.047
A1	0.05	—	0.15	0.002	—	0.006
A2	0.95	1.00	1.05	0.037	0.039	0.041
b	0.30	—	0.52	0.012	—	0.020
D	20.82	20.95	21.08	0.820	0.825	0.830
E	11.56	11.76	11.96	0.455	0.463	0.471
E1	10.03	10.16	10.29	0.395	0.400	0.405
e	1.27 BSC.			0.050 BSC.		
L	0.40	0.50	0.60	0.016	0.020	0.024
L1	0.25 BSC.			0.010 BSC.		
ZD	0.95 REF.			0.037 REF.		
θ	0	—	8°	0	—	8°

NOTE :

1. CONTROLLING DIMENSION : MM
2. DIMENSION D AND E1 DO NOT INCLUDE MOLD PROTRUSION.
3. DIMENSION b DOES NOT INCLUDE DAMBAR PROTRUSION/INTRUSION.

ISSI	TITLE	32L 400mil TSOP-2 Package Outline	REV.	E	DATE	06/23/2009

ООО «ЛайфЭлектроникс» “LifeElectronics” LLC

ИНН 7805602321 КПП 780501001 Р/С 40702810122510004610 ФАКБ "АБСОЛЮТ БАНК" (ЗАО) в г.Санкт-Петербурге К/С 30101810900000000703 БИК 044030703

Компания «Life Electronics» занимается поставками электронных компонентов импортного и отечественного производства от производителей и со складов крупных дистрибьюторов Европы, Америки и Азии.

С конца 2013 года компания активно расширяет линейку поставок компонентов по направлению коаксиальный кабель, кварцевые генераторы и конденсаторы (керамические, пленочные, электролитические), за счёт заключения дистрибьюторских договоров

Мы предлагаем:

- *Конкурентоспособные цены и скидки постоянным клиентам.*
- *Специальные условия для постоянных клиентов.*
- *Подбор аналогов.*
- *Поставку компонентов в любых объемах, удовлетворяющих вашим потребностям.*

- *Приемлемые сроки поставки, возможна ускоренная поставка.*
- *Доставку товара в любую точку России и стран СНГ.*
- *Комплексную поставку.*
- *Работу по проектам и поставку образцов.*
- *Формирование склада под заказчика.*

- *Сертификаты соответствия на поставляемую продукцию (по желанию клиента).*
- *Тестирование поставляемой продукции.*
- *Поставку компонентов, требующих военную и космическую приемку.*
- *Входной контроль качества.*
- *Наличие сертификата ISO.*

В составе нашей компании организован Конструкторский отдел, призванный помогать разработчикам, и инженерам.

Конструкторский отдел помогает осуществить:

- *Регистрацию проекта у производителя компонентов.*
- *Техническую поддержку проекта.*
- *Защиту от снятия компонента с производства.*
- *Оценку стоимости проекта по компонентам.*
- *Изготовление тестовой платы монтаж и пусконаладочные работы.*

Тел: +7 (812) 336 43 04 (многоканальный)
Email: org@lifeelectronics.ru

www.lifeelectronics.ru