AT93C46D

3-wire Serial EEPROM
1K (128 x 8 or 64 x 16)

DATASHEET

Features

- Low-voltage Operation
  - V_{CC} = 1.8V to 5.5V
- User-selectable Internal Organization
  - 1K: 128 x 8 or 64 x 16
- 3-wire Serial Interface
- 2MHz Clock Rate (5V)
- Self-timed Write Cycle (5ms Max)
- High Reliability
  - Endurance: 1,000,000 Write Cycles
  - Data Retention: 100 Years
- 8-lead JEDEC SOIC, 8-lead TSSOP, 8-pad UDFN, 8-lead PDIP, and 8-ball VFBGA Packages

Description

The Atmel® AT93C46D provides 1,024 bits of Serial Electrically Erasable Programmable Read-Only Memory (EEPROM) organized as 64 words of 16 bits each (when the ORG pin is connected to V_{CC}) and 128 words of 8 bits each (when the ORG pin is tied to ground). The device is optimized for use in many industrial and commercial applications where low-power and low-voltage operations are essential. The AT93C46D is available in space-saving 8-lead JEDEC SOIC, 8-lead TSSOP, 8-pad UDFN, 8-lead PDIP, and 8-ball VFBGA packages.

The AT93C46D is enabled through the Chip Select pin (CS) and accessed via a 3-wire serial interface consisting of Data Input (DI), Data Output (DO), and Shift Clock (SK). Upon receiving a Read instruction at DI, the address is decoded, and the data is clocked out serially on the DO pin. The write cycle is completely self-timed, and no separate erase cycle is required before Write. The write cycle is only enabled when the part is in the Erase/Write Enable state. When CS is brought high following the initiation of a write cycle, the DO pin outputs the Ready/Busy status of the part.

The AT93C46D operates from 1.8V to 5.5V.

1. Pin Configurations and Pinouts

Table 1-1. Pin Configurations

Pin Name	Function
CS	Chip Select
SK	Serial Data Clock
DI	Serial Data Input
DO	Serial Data Output
GND	Ground
V_{CC}	Power Supply
ORG	Internal Organization
NC	No Connect

8-lead SOIC
(Top View)

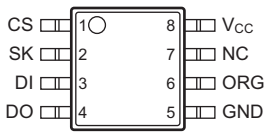

8-lead TSSOP
(Top View)

8-pad UDFN
(Top View)

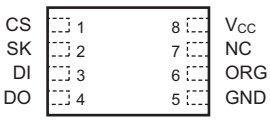

8-lead PDIP
(Top View)

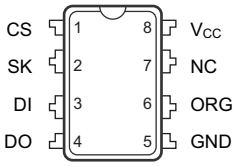

8-ball VFBGA
(Top View)

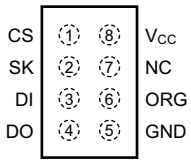

Note: Drawings are not to scale.

2. Absolute Maximum Ratings*

Operating Temperature . . . . . .-55°C to +125°C

Storage Temperature . . . . . .-65°C to +150°C

Voltage on any pin
with respect to ground . . . . . -1.0V to +7.0V

Maximum Operating Voltage 6.25V

DC Output Current 5.0mA

*Notice: Stresses beyond those listed under “Absolute Maximum Ratings” may cause permanent damage to the device. This is a stress rating only, and functional operation of the device at these or any other conditions beyond those indicated in the operational sections of this specification is not implied. Exposure to absolute maximum rating conditions for extended periods may affect device reliability.

3. Block Diagram

Figure 3-1. Block Diagram

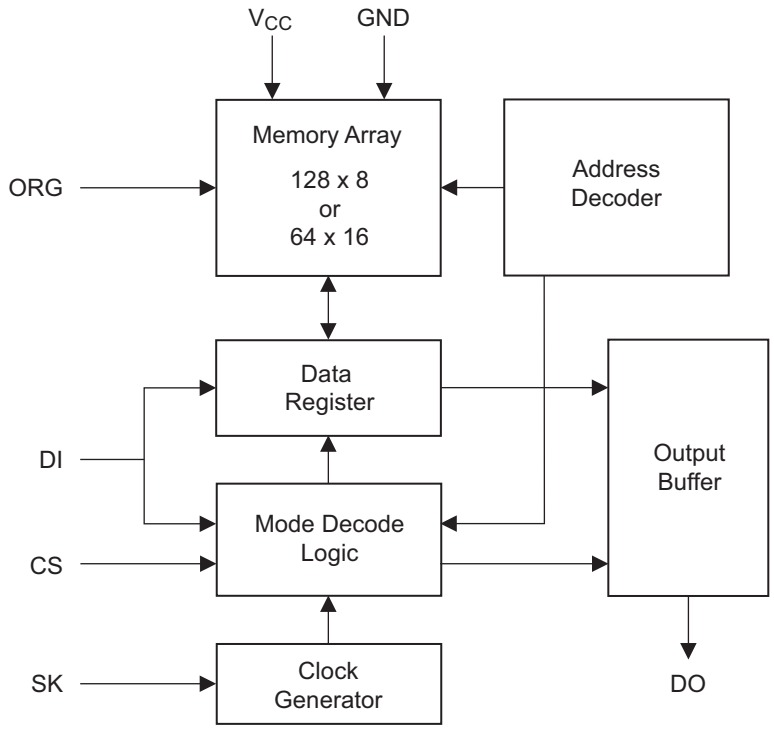

Notes: 1. When the ORG pin is connected to V_{CC}, the x16 organization is selected. When it is connected to ground, the x8 organization is selected. If the ORG pin is left unconnected and the application does not load the input beyond the capability of the internal 1MΩ pull-up resistor, then the x16 organization is selected.

2. If the x16 organization is the mode of choice and pin 6 (ORG) is left unconnected, Atmel recommends using AT93C46E device. For more details, see the AT93C46E datasheet.

4. Memory Organization

4.1 Pin Capacitance

Table 4-1. Pin Capacitance[1]

Applicable over recommended operating range from T_A = 25°C, f = 1.0MHz, V_{CC} = 1.8V (unless otherwise noted).

Symbol	Test Conditions	Max	Units	Conditions
C_{OUT}	Output Capacitance (DO)	5	pF	V_{OUT} = 0V
C_{IN}	Input Capacitance (CS, SK, DI)	5	pF	V_{IN} = 0V

Note: 1. This parameter is characterized, and is not 100% tested.

4.2 DC Characteristics

Table 4-2. DC Characteristics

Applicable over recommended operating range from T_{AI} = -40°C to +85°C, V_{CC} = 1.8V to 5.5V (unless otherwise noted).

Symbol	Parameter	Test Condition		Min	Typ	Max	Unit
V_{CC1}	Supply Voltage			1.8		5.5	V
V_{CC2}	Supply Voltage			2.7		5.5	V
V_{CC3}	Supply Voltage			4.5		5.5	V
I_{CC}	Supply Current	V_{CC} = 5.0V	Read at 1.0MHz		0.5	2.0	mA
			Write at 1.0MHz		0.5	2.0	mA
I_{SB1}	Standby Current	V_{CC} = 1.8V	CS = 0V		0.4	1.0	µA
I_{SB2}	Standby Current	V_{CC} = 2.7V	CS = 0V		6.0	10.0	µA
I_{SB3}	Standby Current	V_{CC} = 5.0V	CS = 0V		10.0	15.0	µA
I_{IL}	Input Leakage	V_{IN} = 0V to V_{CC}			0.1	1.0	µA
I_{OL}	Output Leakage	V_{IN} = 0V to V_{CC}			0.1	1.0	µA
V_{IL1}[1]	Input Low Voltage	2.7V ≤ V_{CC} ≤ 5.5V		–0.6		0.8	V
V_{IH1}[1]	Input High Voltage	2.7V ≤ V_{CC} ≤ 5.5V		2.0		V_{CC} + 1	V
V_{IL2}[1]	Input Low Voltage	1.8V ≤ V_{CC} ≤ 2.7V		–0.6		V_{CC} x 0.3	V
V_{IH2}[1]	Input High Voltage	1.8V ≤ V_{CC} ≤ 2.7V		V_{CC} x 0.7		V_{CC} + 1	V
V_{OL1}	Output Low Voltage	2.7V ≤ V_{CC} ≤ 5.5V	I_{OL} = 2.1mA			0.4	V
V_{OH1}	Output High Voltage	2.7V ≤ V_{CC} ≤ 5.5V	I_{OH} = –0.4mA	2.4			V
V_{OL2}	Output Low Voltage	1.8V ≤ V_{CC} ≤ 2.7V	I_{OL} = 0.15mA			0.2	V
V_{OH2}	Output High Voltage	1.8V ≤ V_{CC} ≤ 2.7V	I_{OH} = –100µA	V_{CC} – 0.2			V

Note: 1. V_{IL} min and V_{IH} max are reference only, and are not tested.

4.3 AC Characteristics

Table 4-3. AC Characteristics

Applicable over recommended operating range from T_{AI} = –40°C to + 85°C, V_{CC} = as specified, CL = 1 TTL gate and 100pF (unless otherwise noted).

Symbol	Parameter	Test Condition		Min	Typ	Max	Units
f_{SK}	SK Clock Frequency	$4.5V \le V_{CC} \le 5.5V$		0		2	MHz
		$2.7V \le V_{CC} \le 5.5V$		0		1	MHz
		$1.8V \le V_{CC} \le 5.5V$		0		250	kHz
t_{SKH}	SK High Time	$4.5V \le V_{CC} \le 5.5V$		250			ns
		$2.7V \le V_{CC} \le 5.5V$		250			ns
		$1.8V \le V_{CC} \le 5.5V$		1000			ns
t_{SKL}	SK Low Time	$4.5V \le V_{CC} \le 5.5V$		250			ns
		$2.7V \le V_{CC} \le 5.5V$		250			ns
		$1.8V \le V_{CC} \le 5.5V$		1000			ns
t_{CS}	Minimum CS Low Time	$4.5V \le V_{CC} \le 5.5V$		250			ns
		$2.7V \le V_{CC} \le 5.5V$		250			ns
		$1.8V \le V_{CC} \le 5.5V$		1000			ns
t_{CSS}	CS Setup Time	Relative to SK	$4.5V \le V_{CC} \le 5.5V$	50			ns
			$2.7V \le V_{CC} \le 5.5V$	50			ns
			$1.8V \le V_{CC} \le 5.5V$	200			ns
t_{DIS}	DI Setup Time	Relative to SK	$4.5V \le V_{CC} \le 5.5V$	100			ns
			$2.7V \le V_{CC} \le 5.5V$	100			ns
			$1.8V \le V_{CC} \le 5.5V$	400			ns
t_{CSH}	CS Hold Time	Relative to SK		0			ns
t_{DIH}	DI Hold Time	Relative to SK	$4.5V \le V_{CC} \le 5.5V$	100			ns
			$2.7V \le V_{CC} \le 5.5V$	400			ns
			$1.8V \le V_{CC} \le 5.5V$				ns
t_{PD1}	Output Delay to 1	AC Test	$4.5V \le V_{CC} \le 5.5V$			250	ns
			$2.7V \le V_{CC} \le 5.5V$			250	ns
			$1.8V \le V_{CC} \le 5.5V$			1000	ns
t_{PD0}	Output Delay to 0	AC Test	$4.5V \le V_{CC} \le 5.5V$			250	ns
			$2.7V \le V_{CC} \le 5.5V$			250	ns
			$1.8V \le V_{CC} \le 5.5V$			1000	ns
t_{SV}	CS to Status Valid	AC Test	$4.5V \le V_{CC} \le 5.5V$			250	ns
			$2.7V \le V_{CC} \le 5.5V$			250	ns
			$1.8V \le V_{CC} \le 5.5V$			1000	ns
t_{DF}	CS to DO in High-impedance	AC Test CS = V_{IL}	$4.5V \le V_{CC} \le 5.5V$			100	ns
			$2.7V \le V_{CC} \le 5.5V$			250	ns
			$1.8V \le V_{CC} \le 5.5V$			400	ns
t_{WP}	Write Cycle Time		$1.8V \le V_{CC} \le 5.5V$	0.1	3	5	ms
Endurance[1]	5.0V, 25°C				1,000,000		Write Cycles

Note: 1. This parameter is characterized, and is not 100% tested.

5. Functional Description

The AT93C46D is accessed via a simple and versatile 3-wire serial communication interface. Device operation is controlled by seven instructions issued by the Host processor. A valid instruction starts with a rising edge of CS and consists of a Start bit (Logic 1), followed by the appropriate opcode, and the desired memory address location.

Table 5-1. AT93C46D Instruction Set

Instruction	SB	Opcode	Address		Data		Comments
			x8[1]	x16[1]	x8	x16	
READ	1	10	$A_6 – A_0$	$A_5 – A_0$			Reads data stored in memory at specified address.
EWEN	1	00	11XXXXXXX	11XXXXXX			Write Enable must precede all programming modes.
ERASE	1	11	$A_6 – A_0$	$A_5 – A_0$			Erases memory location $A_N – A_0$.
WRITE	1	01	$A_6 – A_0$	$A_5 – A_0$	$D_7 – D_0$	$D_{15} – D_0$	Writes memory location $A_N – A_0$.
ERAL	1	00	10XXXXXXX	10XXXXXX			Erases all memory locations. Valid only at V_{CC3} (Section 4.2, “DC Characteristics” on page 4).
WRAL	1	00	01XXXXXXX	01XXXXXX	$D_7 – D_0$	$D_{15} – D_0$	Writes all memory locations. Valid only at V_{CC3} (Section 4.2).
EWDS	1	00	00XXXXXXX	00XXXXXX			Disables all programming instructions.

Note: 1. The ‘X’ in the address field represent don’t care values, and must be clocked.

READ: The READ instruction contains the address code for the memory location to be read. After the instruction and address are decoded, data from the selected memory location is available at the Serial Output pin, DO. Output data changes are synchronized with the rising edges of the Serial Clock pin, SK. It should be noted that a dummy bit (Logic 0) precedes the 8-bit or 16-bit data output string.

Erase/Write Enable (EWEN): To ensure data integrity, the part automatically goes into the Erase/Write Disable (EWDS) state when power is first applied. An Erase/Write Enable (EWEN) instruction must be executed first before any programming instructions can be carried out.

Note: Once in the EWEN state, programming remains enabled until an EWDS instruction is executed, or V_{CC} power is removed from the part.

ERASE: The ERASE instruction programs all bits in the specified memory location to the Logic 1 state. The self-timed erase cycle starts once the ERASE instruction and address are decoded. The DO pin outputs the Ready/Busy status of the part if CS is brought high after being kept low for a minimum of t_{CS}. A Logic 1 at the DO pin indicates that the selected memory location has been erased, and the part is ready for another instruction.

WRITE: The WRITE instruction contains the 8-bits or 16-bits of data to be written into the specified memory location. The self-timed programming cycle, t_{WP}, starts after the last bit of data is received at Serial Data Input pin DI. The DO pin outputs the Ready/Busy status of the part if CS is brought high after being kept low for a minimum of t_{CS}. A Logic 0 at DO indicates that programming is still in progress. A Logic 1 indicates that the memory location at the specified address has been written with the data pattern contained in the instruction, and the part is ready for further instructions. A Ready/Busy status cannot be obtained if CS is brought high after the end of the self-timed programming cycle, t_{WP}.

Erase All (ERAL): The Erase All (ERAL) instruction programs every bit in the Memory Array to the Logic 1 state and is primarily used for testing purposes. The DO pin outputs the Ready/Busy status of the part if CS is brought high after being kept low for a minimum of t_{CS}. The ERAL instruction is valid only at V_{CC} = 5.0V ± 10% (Section 4.2, “DC Characteristics” on page 4).

Write All (WRAL): The Write All (WRAL) instruction programs all memory locations with the data patterns specified in the instruction. The DO pin outputs the Ready/Busy status of the part if CS is brought high after being kept low for a minimum of t_{CS}. The WRAL instruction is valid only at V_{CC} = 5.0V ± 10% (Section 4.2).

Erase/Write Disable (EWDS): To protect against accidental data disturbance, the Erase/Write Disable (EWDS) instruction disables all programming modes and should be executed after all programming operations. The operation of the Read instruction is independent of both the EWEN and EWDS instructions and can be executed at any time.

6. Timing Diagrams

Figure 6-1. Synchronous Data Timing

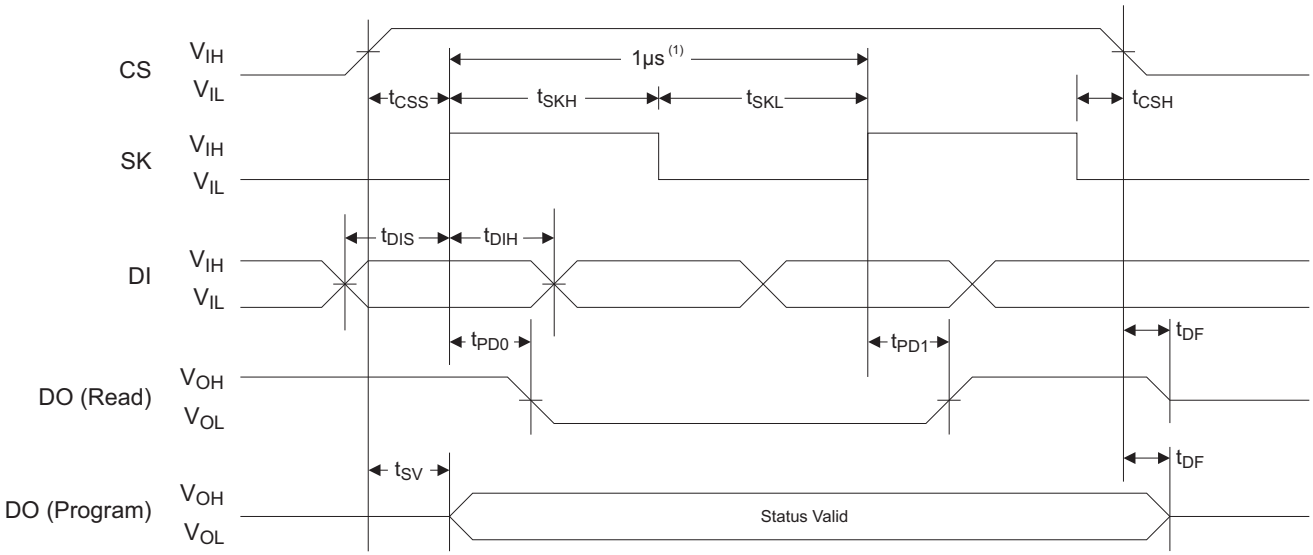

Note: 1. This is the minimum SK period.

Table 6-1. Organization Key for Timing Diagrams

I/O	AT93C46D (1K)	
	x8	x16
A_N	A_6	A_5
D_N	D_7	D_{15}

Figure 6-2. READ Timing

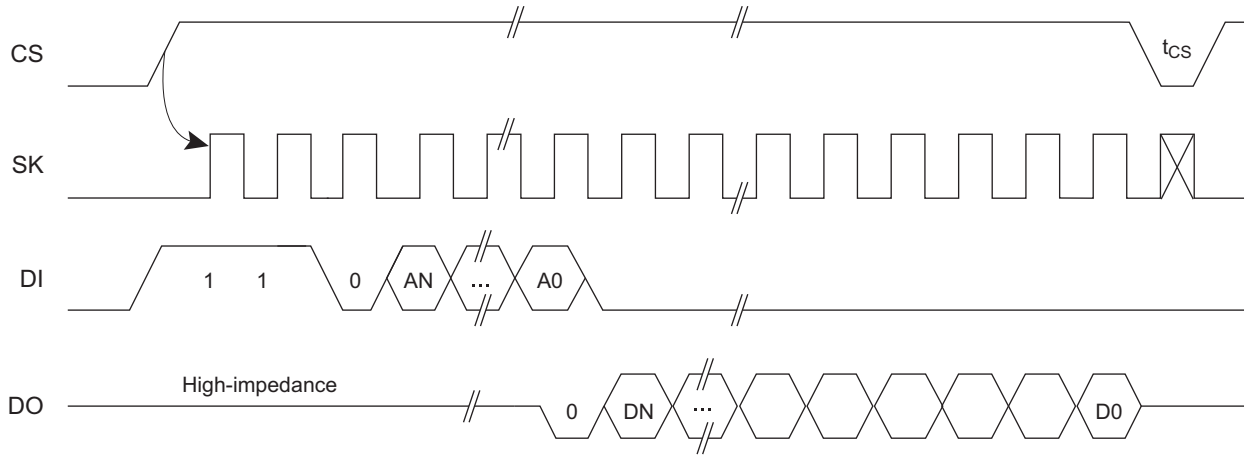

Figure 6-3. EWEN Timing

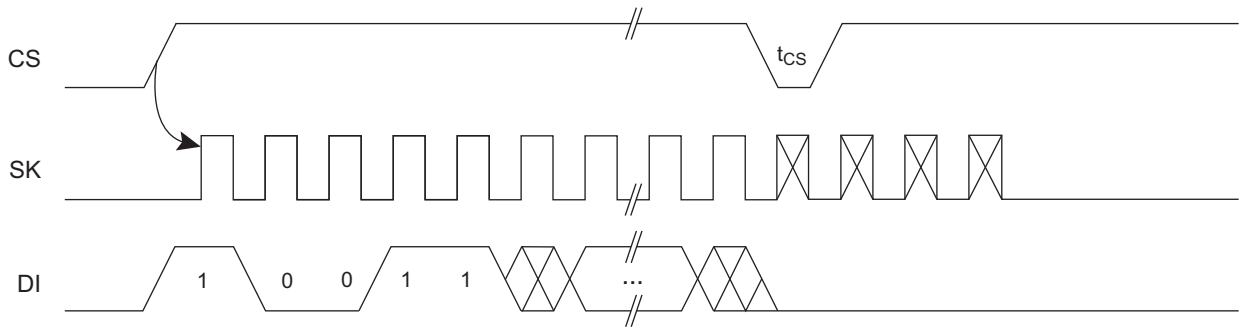

Figure 6-4. EWDS Timing

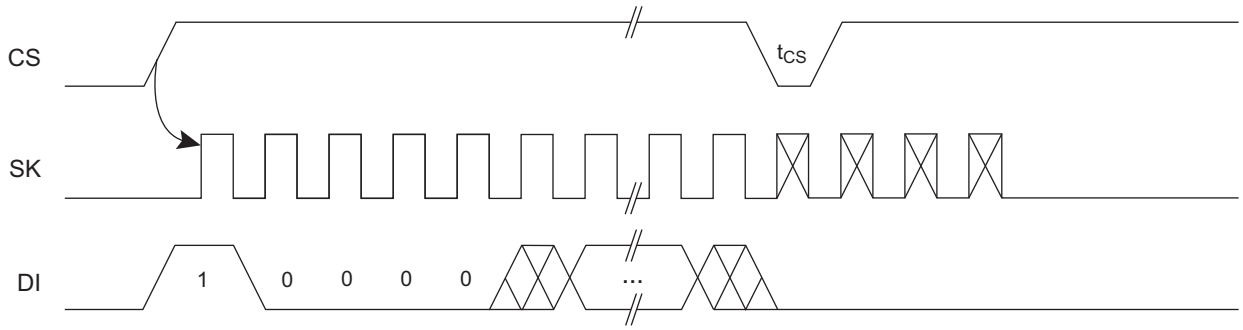

Figure 6-5. WRITE Timing

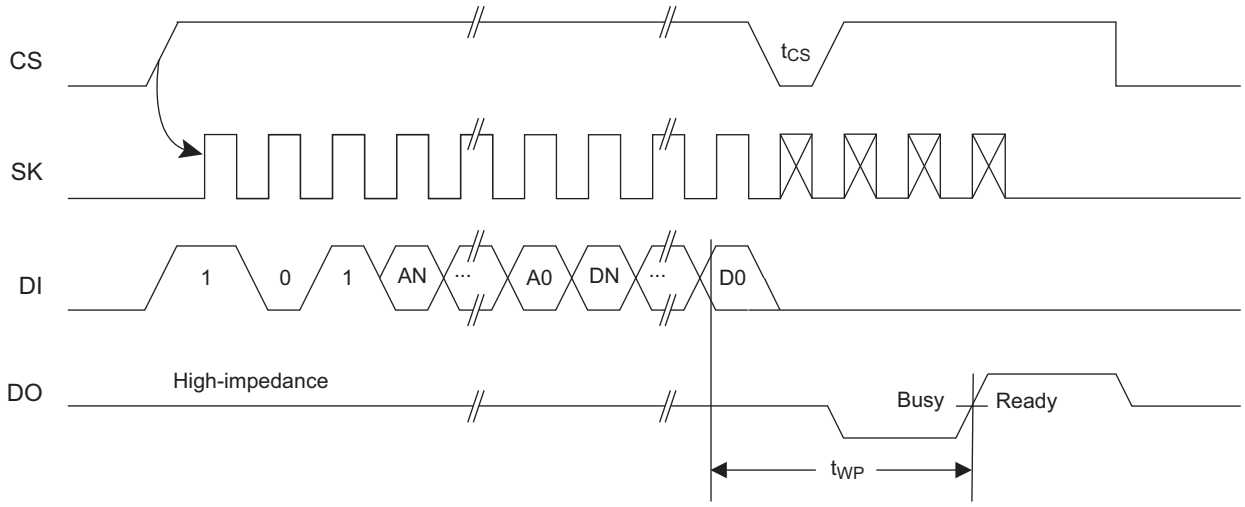

Figure 6-6. WRAL Timing[1]

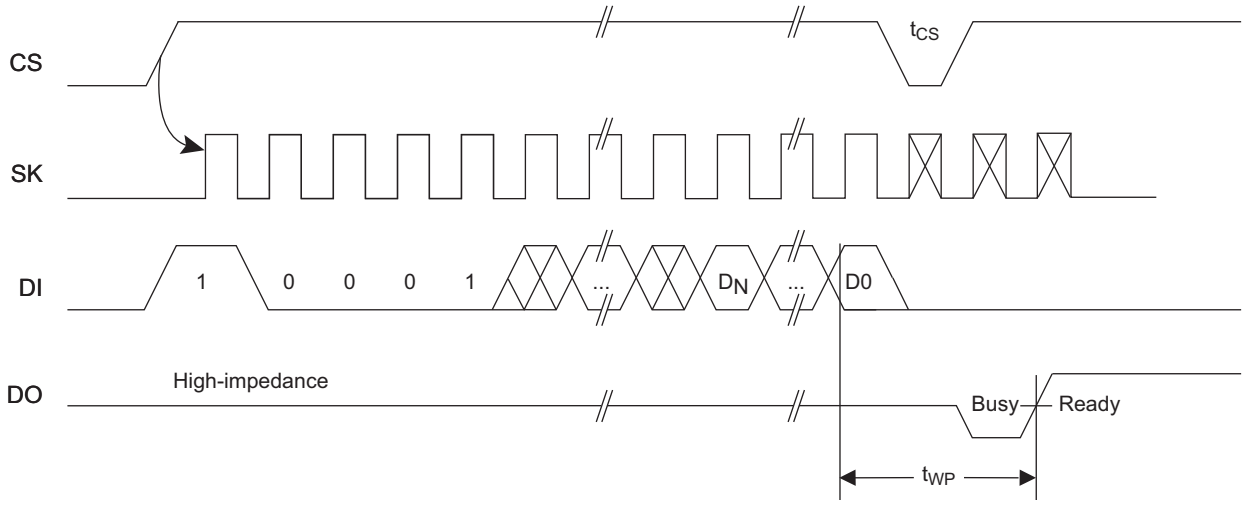

Note: 1. Valid only at V_{CC3} (Section 4.2, “DC Characteristics” on page 4).

Figure 6-7. ERASE Timing

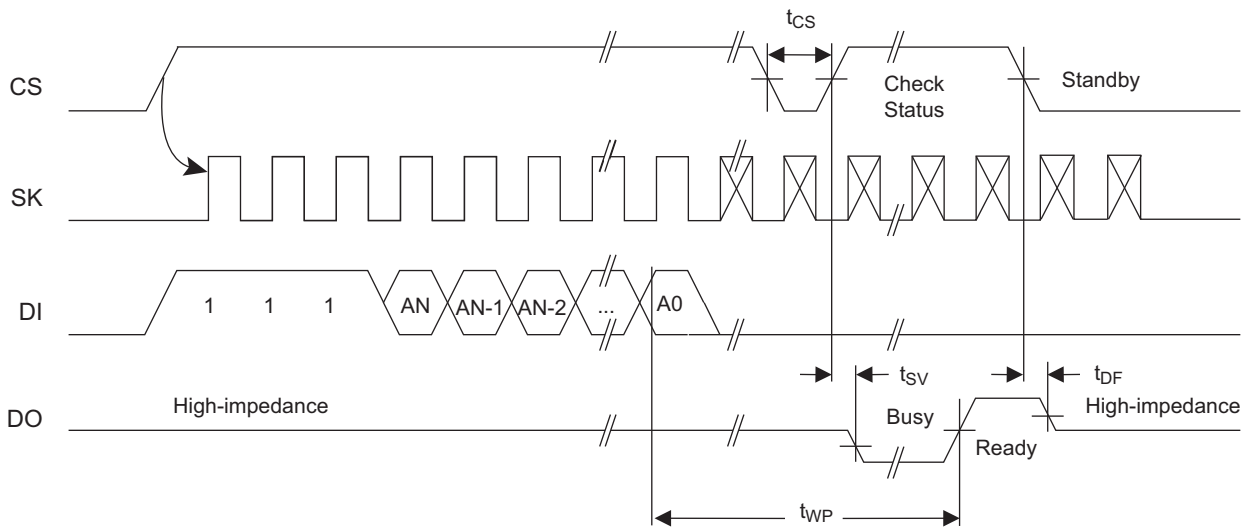

Figure 6-8. ERAL Timing[(1)]

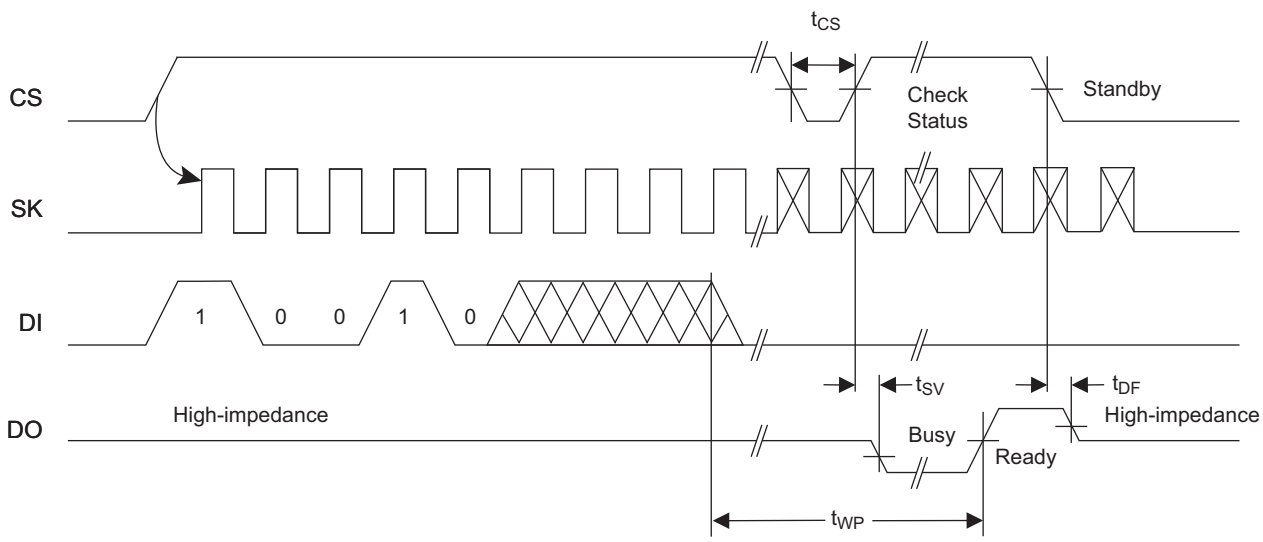

Note: 1. Valid only at V_{CC3} (Section 4.2, “DC Characteristics” on page 4).

7. Ordering Code Detail

A T 9 3 C 4 6 D N - S H - B

Atmel Designator

Product Family
93C = Microwire-compatible
3-Wire Serial EEPROM

Device Density
46 = 1-Kilobit

Device Revision

Package Variation (if applicable)
N = 0.150” Wide JEDEC SOIC
Y6 = 2.0x3.0mm Body UDFN
U3 = 1.5x2.0mm Body VFBGA

Shipping Carrier Option
B = Bulk
T = Tape and Reel, Standard Quantity Option
E = Tape and Reel, Expanded Quantity Option

Package Device Grade or Wafer/Die Thickness
H = Green, NiPdAu Lead Finish
Industrial Temperature Range
(-40°C to +85°C)
U = Green, Matte Tin Lead Finish
or SnAgCu Ball
Industrial Temperature Range
(-40°C to +85°C)
11 = 11mil Wafer Thickness

Package Option
S = SOIC
T = TSSOP
Y = UDFN
P = PDIP
U = VFBGA
WWU = Wafer Unsawn

8. Ordering Information

Atmel Ordering Code	Lead Finish	Package	Delivery Information		Operation Range
			Form	Quantity	
AT93C46DN-SH-B	NiPdAu (Lead-free/Halogen-free)	8S1	Bulk (Tubes)	100 per Tube	Industrial Temperature (-40°C to 85°C)
AT93C46DN-SH-T			Tape and Reel	4,000 per Reel	
AT93C46D-TH-B		8X	Bulk (Tubes)	100 per Tube	
AT93C46D-TH-T			Tape and Reel	5,000 per Reel	
AT93C46DY6-YH-T		8MA2	Tape and Reel	5,000 per Reel	
AT93C46DY6-YH-E			Tape and Reel	15,000 per Reel	
AT93C46D-PU	Matte Tin (Lead-free/Halogen free)	8P3	Bulk (Tubes)	50 per Tube	
AT93C46DU3-UU-T	SnAgCu (Lead-free/Halogen-free)	8U3-1	Tape and Reel	5,000 per Reel	
AT93C46D-W-11[1]	N/A	Wafer Sale	Note 1		

Note: 1. For wafer sales, please contact Atmel sales. Bumped die available upon request.

Package Type	
8S1	8-lead, 0.150” wide, Plastic Gull Wing, Small Outline (JEDEC SOIC)
8X	8-lead, 0.170” wide, Thin Shrink Small Outline (TSSOP)
8MA2	8-pad, 2.00mm x 3.00mm body, 0.50mm pitch, Ultra Thin Dual No Lead (UDFN)
8P3	8-lead, 0.300” wide body, Plastic Dual In-line Package (PDIP)
8U3-1	8-ball, 1.50mm x 2.00mm body, 0.50mm pitch, Small Die Ball Grid Array (VFBGA)

9. Part Markings

AT93C46D: Package Marking Information

8-lead SOIC	8-lead TSSOP	8-pad UDFN
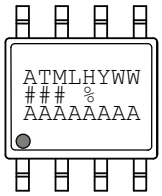	*Note: Lot Number and location of assembly and on the bottom side of the package.*	2.0 x 3.0 mm Body 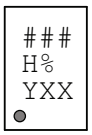
8-lead PDIP	**8-ball VFBGA**	
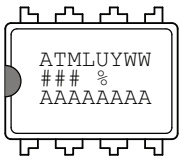	1.5 x 2.0 mm Body 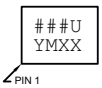	

Note 1: ● designates pin 1
Note 2: Package drawings are not to scale

Catalog Number Truncation			
AT93C46D		Truncation Code ###: 46D	
Date Codes			**Voltages**
Y = Year	M = Month	WW = Work Week of Assembly	% = Minimum Voltage
4: 2014 8: 2018 5: 2015 9: 2019 6: 2016 0: 2020 7: 2017 1: 2021	A: January B: February ... L: December	02: Week 2 04: Week 4 ... 52: Week 52	1: 1.8V min

Country of Assembly	**Lot Number**	**Grade/Lead Finish Material**
@ = Country of Assembly	AAA...A = Atmel Wafer Lot Number	H: Industrial/NiPdAu U: Industrial/Matte Tin/SnAgCu

Trace Code	**Atmel Truncation**
XX = Trace Code (Atmel Lot Numbers Correspond to Code) Example: AA, AB.... YZ, ZZ	AT: Atmel ATM: Atmel ATML: Atmel

6/11/14

Atmel Package Mark Contact: DL-CSO-Assy_eng@atmel.com	**TITLE** **93C46DSM**, AT93C46D Package Marking Information	**DRAWING NO.** 93C46DSM	**REV.** A

10. Packaging Information

10.1 8S1 — 8-lead JEDEC SOIC

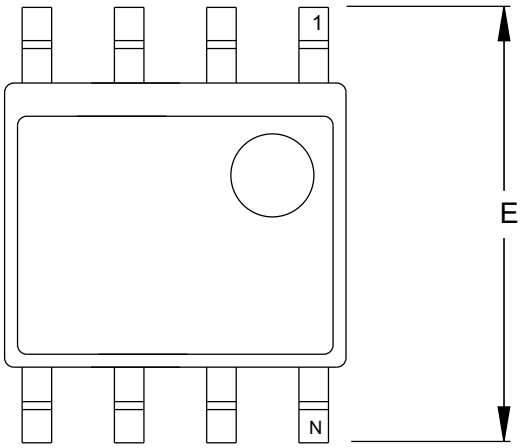

TOP VIEW

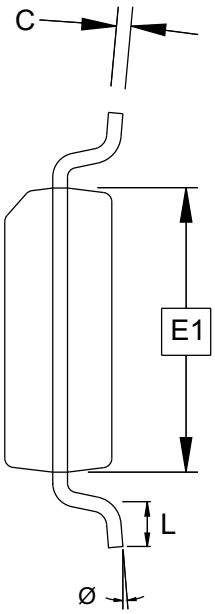

END VIEW

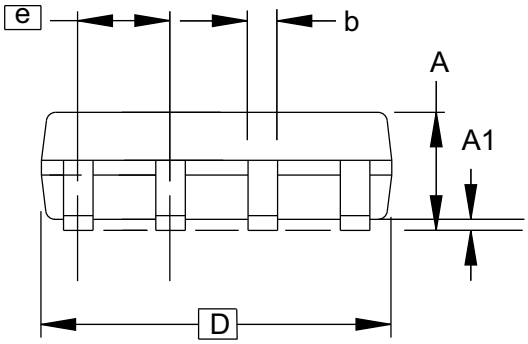

SIDE VIEW

Notes: This drawing is for general information only.
Refer to JEDEC Drawing MS-012, Variation AA
for proper dimensions, tolerances, datums, etc.

COMMON DIMENSIONS
(Unit of Measure = mm)

SYMBOL	MIN	NOM	MAX	NOTE
A	1.35	–	1.75	
A1	0.10	–	0.25	
b	0.31	–	0.51	
C	0.17	–	0.25	
D	4.80	–	5.05	
E1	3.81	–	3.99	
E	5.79	–	6.20	
e	1.27 BSC			
L	0.40	–	1.27	
Ø	0°	–	8°	

6/22/11

Atmel Package Drawing Contact: packagedrawings@atmel.com	TITLE 8S1, 8-lead (0.150” Wide Body), Plastic Gull Wing Small Outline (JEDEC SOIC)	GPC SWB	DRAWING NO. 8S1	REV. G

10.2 8X — 8-lead TSSOP

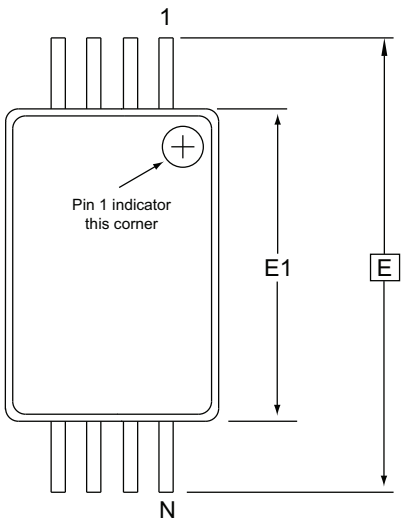

Top View

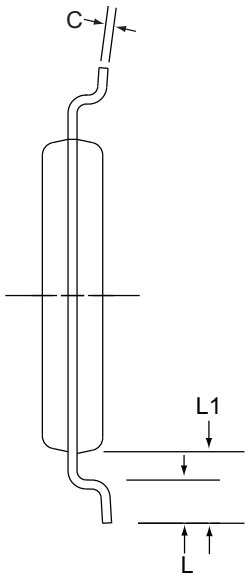

End View

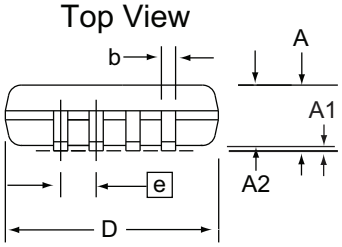

Side View

Notes:
1. This drawing is for general information only. Refer to JEDEC Drawing MO-153, Variation AA, for proper dimensions, tolerances, datums, etc.
2. Dimension D does not include mold Flash, protrusions or gate burrs. Mold Flash, protrusions and gate burrs shall not exceed 0.15mm (0.006in) per side.
3. Dimension E1 does not include inter-lead Flash or protrusions. Inter-lead Flash and protrusions shall not exceed 0.25mm (0.010in) per side.
4. Dimension b does not include Dambar protrusion. Allowable Dambar protrusion shall be 0.08mm total in excess of the b dimension at maximum material condition. Dambar cannot be located on the lower radius of the foot. Minimum space between protrusion and adjacent lead is 0.07mm.
5. Dimension D and E1 to be determined at Datum Plane H.

COMMON DIMENSIONS
(Unit of Measure = mm)

SYMBOL	MIN	NOM	MAX	NOTE
A	-	-	1.20	
A1	0.05	-	0.15	
A2	0.80	1.00	1.05	
D	2.90	3.00	3.10	2, 5
E	6.40 BSC			
E1	4.30	4.40	4.50	3, 5
b	0.19	0.25	0.30	4
e	0.65 BSC			
L	0.45	0.60	0.75	
L1	1.00 REF			
C	0.09	-	0.20	

2/27/14

Atmel Package Drawing Contact: packagedrawings@atmel.com	TITLE 8X, 8-lead 4.4mm Body, Plastic Thin Shrink Small Outline Package (TSSOP)	GPC TNR	DRAWING NO. 8X	REV. E

10.3 8MA2 — 8-pad UDFN

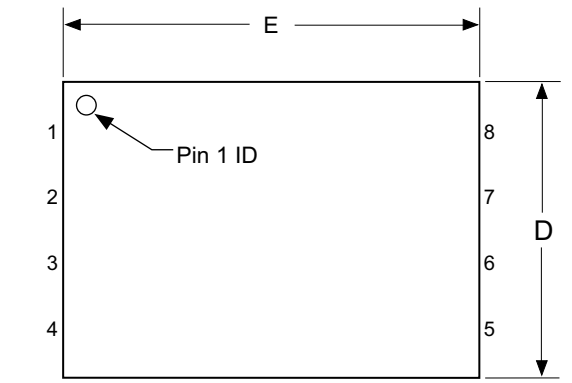

TOP VIEW

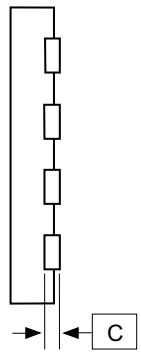

SIDE VIEW

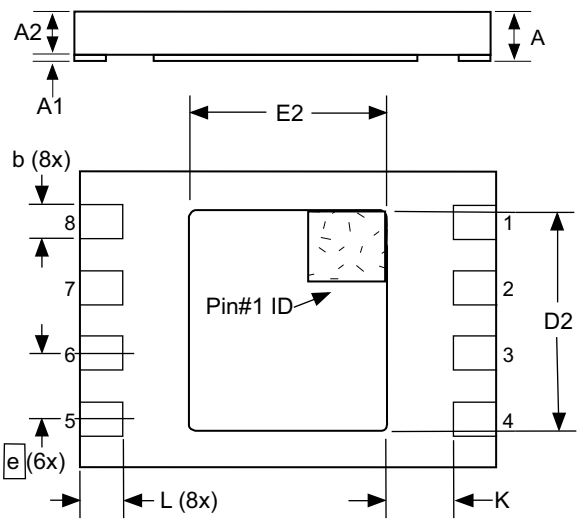

BOTTOM VIEW

Notes:
1. This drawing is for general information only. Refer to Drawing MO-229, for proper dimensions, tolerances, datums, etc.
2. The Pin #1 ID is a laser-marked feature on Top View.
3. Dimensions b applies to metallized terminal and is measured between 0.15 mm and 0.30 mm from the terminal tip. If the terminal has the optional radius on the other end of the terminal, the dimension should not be measured in that radius area.
4. The Pin #1 ID on the Bottom View is an orientation feature on the thermal pad.

COMMON DIMENSIONS
(Unit of Measure = mm)

SYMBOL	MIN	NOM	MAX	NOTE
A	0.50	0.55	0.60	
A1	0.0	0.02	0.05	
A2	-	-	0.55	
D	1.90	2.00	2.10	
D2	1.40	1.50	1.60	
E	2.90	3.00	3.10	
E2	1.20	1.30	1.40	
b	0.18	0.25	0.30	3
C	1.52 REF			
L	0.30	0.35	0.40	
e	0.50 BSC			
K	0.20	-	-	

11/26/14

Atmel Package Drawing Contact: packagedrawings@atmel.com	TITLE 8MA2, 8-pad 2 x 3 x 0.6mm Body, Thermally Enhanced Plastic Ultra Thin Dual Flat No-Lead Package (UDFN)	GPC YNZ	DRAWING NO. 8MA2	REV. G

10.4 8P3 — 8-lead PDIP

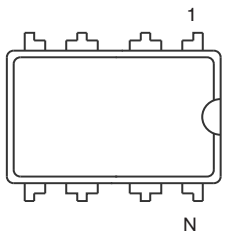

Top View

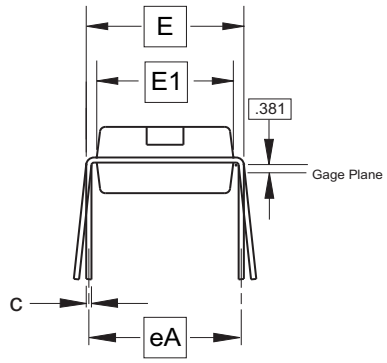

End View

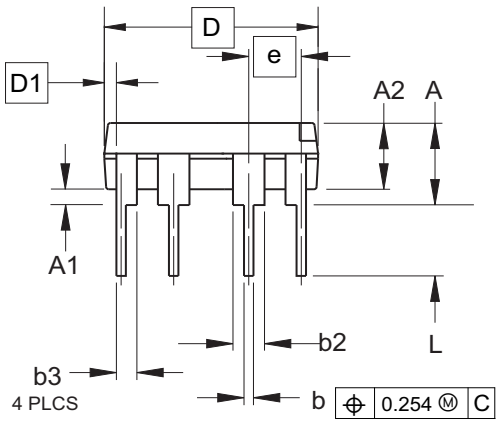

Side View

COMMON DIMENSIONS
(Unit of Measure = mm)

SYMBOL	MIN	NOM	MAX	NOTE
A	-	-	5.334	2
A1	0.381	-	-	
A2	2.921	3.302	4.953	
b	0.356	0.457	0.559	5
b2	1.143	1.524	1.778	6
b3	0.762	0.991	1.143	6
c	0.203	0.254	0.356	
D	9.017	9.271	10.160	3
D1	0.127	0.000	0.000	3
E	7.620	7.874	8.255	4
E1	6.096	6.350	7.112	3
e	2.540 BSC			
eA	7.620 BSC			4
L	2.921	3.302	3.810	2

Notes:
1. This drawing is for general information only; refer to JEDEC Drawing MS-001, Variation BA for additional information.
2. Dimensions A and L are measured with the package seated in JEDEC seating plane Gauge GS-3.
3. D, D1 and E1 dimensions do not include mold Flash or protrusions. Mold Flash or protrusions shall not exceed 0.010 inch.
4. E and eA measured with the leads constrained to be perpendicular to datum.
5. Pointed or rounded lead tips are preferred to ease insertion.
6. b2 and b3 maximum dimensions do not include Dambar protrusions. Dambar protrusions shall not exceed 0.010 (0.25 mm).

07/31/14

Atmel Package Drawing Contact: packagedrawings@atmel.com	TITLE 8P3, 8-lead, 0.300” Wide Body, Plastic Dual In-line Package (PDIP)	GPC PTC	DRAWING NO. 8P3	REV. E

10.5 8U3-1 — 8-ball VFBGA

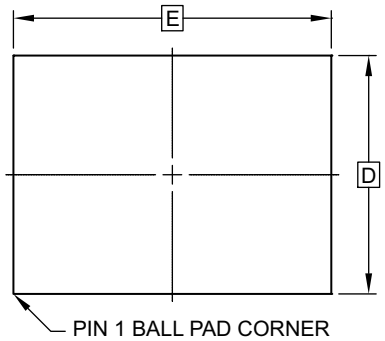

TOP VIEW

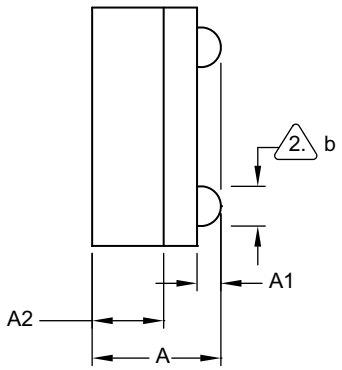

SIDE VIEW

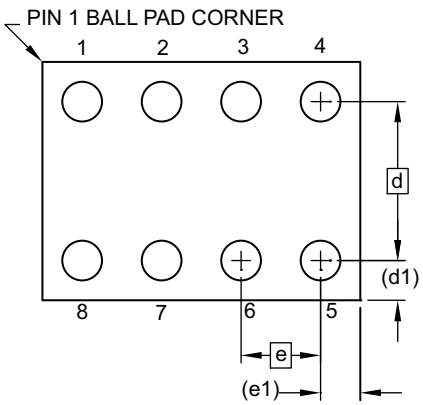

BOTTOM VIEW
8 SOLDER BALLS

Notes:

1. This drawing is for general information only.
2. Dimension ‘b’ is measured at maximum solder ball diameter.
3. Solder ball composition shall be 95.5Sn-4.0Ag-.5Cu.

COMMON DIMENSIONS
(Unit of Measure - mm)

SYMBOL	MIN	NOM	MAX	NOTE
A	0.73	0.79	0.85	
A1	0.09	0.14	0.19	
A2	0.40	0.45	0.50	
b	0.20	0.25	0.30	2
D	1.50 BSC			
E	2.0 BSC			
e	0.50 BSC			
e1	0.25 REF			
d	1.00 BSC			
d1	0.25 REF			

6/11/13

Atmel Package Drawing Contact: packagedrawings@atmel.com	TITLE 8U3-1, 8-ball, 1.50mm x 2.00mm body, 0.50mm pitch, Very Thin, Fine-Pitch Ball Grid Array Package (VFBGA)	GPC GXU	DRAWING NO. 8U3-1	REV. F

11. Revision History

Revision No.	Date	Comments
5193H	01/2015	Added the UDFN expanded quantity option and the ordering information section. Updated the 8MA2 and 8P3 package drawings.
5193G	08/2014	Updated package drawings, template, logos, and disclaimer page.
5193F	01/2008	Removed the ‘preliminary’ status.
5193E	11/2007	Modified the ‘max’ value in AC Characteristics table.
5193D	08/2007	Moved Pinout figure. Added new feature for Die Sales. Modified Ordering Information table layout. Modified Park Marking Schemes.
5193C	06/2007	Updated to new template. Added Product Markup Scheme. Added Technical email contact. Corrected Figures 4 and 5.
5193B	02/2007	Added ‘Ultra Thin’ description to 8-lead Mini-MAP package.
5193A	01/2007	Initial document release.

Enabling Unlimited Possibilities®

Atmel Corporation 1600 Technology Drive, San Jose, CA 95110 USA **T:** (+1)(408) 441.0311 **F:** (+1)(408) 436.4200 | **www.atmel.com**

© 2015 Atmel Corporation. / Rev.: Atmel-5193H-SEEPROM-AT93C46D-Datasheet_012015.

Atmel®, Atmel logo and combinations thereof, Enabling Unlimited Possibilities®, and others are registered trademarks or trademarks of Atmel Corporation in U.S. and other countries. Other terms and product names may be trademarks of others.

DISCLAIMER: The information in this document is provided in connection with Atmel products. No license, express or implied, by estoppel or otherwise, to any intellectual property right is granted by this document or in connection with the sale of Atmel products. EXCEPT AS SET FORTH IN THE ATMEL TERMS AND CONDITIONS OF SALES LOCATED ON THE ATMEL WEBSITE, ATMEL ASSUMES NO LIABILITY WHATSOEVER AND DISCLAIMS ANY EXPRESS, IMPLIED OR STATUTORY WARRANTY RELATING TO ITS PRODUCTS INCLUDING, BUT NOT LIMITED TO, THE IMPLIED WARRANTY OF MERCHANTABILITY, FITNESS FOR A PARTICULAR PURPOSE, OR NON-INFRINGEMENT. IN NO EVENT SHALL ATMEL BE LIABLE FOR ANY DIRECT, INDIRECT, CONSEQUENTIAL, PUNITIVE, SPECIAL OR INCIDENTAL DAMAGES (INCLUDING, WITHOUT LIMITATION, DAMAGES FOR LOSS AND PROFITS, BUSINESS INTERRUPTION, OR LOSS OF INFORMATION) ARISING OUT OF THE USE OR INABILITY TO USE THIS DOCUMENT, EVEN IF ATMEL HAS BEEN ADVISED OF THE POSSIBILITY OF SUCH DAMAGES. Atmel makes no representations or warranties with respect to the accuracy or completeness of the contents of this document and reserves the right to make changes to specifications and products descriptions at any time without notice. Atmel does not make any commitment to update the information contained herein. Unless specifically provided otherwise, Atmel products are not suitable for, and shall not be used in, automotive applications. Atmel products are not intended, authorized, or warranted for use as components in applications intended to support or sustain life.

SAFETY-CRITICAL, MILITARY, AND AUTOMOTIVE APPLICATIONS DISCLAIMER: Atmel products are not designed for and will not be used in connection with any applications where the failure of such products would reasonably be expected to result in significant personal injury or death (“Safety-Critical Applications”) without an Atmel officer's specific written consent. Safety-Critical Applications include, without limitation, life support devices and systems, equipment or systems for the operation of nuclear facilities and weapons systems. Atmel products are not designed nor intended for use in military or aerospace applications or environments unless specifically designated by Atmel as military-grade. Atmel products are not designed nor intended for use in automotive applications unless specifically designated by Atmel as automotive-grade.

ООО «ЛайфЭлектроникс» “LifeElectronics” LLC

ИНН 7805602321 КПП 780501001 Р/С 40702810122510004610 ФАКБ "АБСОЛЮТ БАНК" (ЗАО) в г.Санкт-Петербурге К/С 30101810900000000703 БИК 044030703

Компания «Life Electronics» занимается поставками электронных компонентов импортного и отечественного производства от производителей и со складов крупных дистрибьюторов Европы, Америки и Азии.

С конца 2013 года компания активно расширяет линейку поставок компонентов по направлению коаксиальный кабель, кварцевые генераторы и конденсаторы (керамические, пленочные, электролитические), за счёт заключения дистрибьюторских договоров

Мы предлагаем:

- *Конкурентоспособные цены и скидки постоянным клиентам.*
- *Специальные условия для постоянных клиентов.*
- *Подбор аналогов.*
- *Поставку компонентов в любых объемах, удовлетворяющих вашим потребностям.*

- *Приемлемые сроки поставки, возможна ускоренная поставка.*
- *Доставку товара в любую точку России и стран СНГ.*
- *Комплексную поставку.*
- *Работу по проектам и поставку образцов.*
- *Формирование склада под заказчика.*

- *Сертификаты соответствия на поставляемую продукцию (по желанию клиента).*
- *Тестирование поставляемой продукции.*
- *Поставку компонентов, требующих военную и космическую приемку.*
- *Входной контроль качества.*
- *Наличие сертификата ISO.*

В составе нашей компании организован Конструкторский отдел, призванный помогать разработчикам, и инженерам.

Конструкторский отдел помогает осуществить:

- *Регистрацию проекта у производителя компонентов.*
- *Техническую поддержку проекта.*
- *Защиту от снятия компонента с производства.*
- *Оценку стоимости проекта по компонентам.*
- *Изготовление тестовой платы монтаж и пусконаладочные работы.*

Тел: +7 (812) 336 43 04 (многоканальный)
Email: org@lifeelectronics.ru

www.lifeelectronics.ru