14A Digital PicoDLynxII™: Non-Isolated DC-DC Power Modules

4.5Vdc –14.4Vdc input; 0.51Vdc to 5.5Vdc output; 14A Output Current

RoHS Compliant

Applications

- Distributed power architectures
- Intermediate bus voltage applications
- Telecommunications equipment
- Servers and storage applications
- Networking equipment
- Industrial equipment

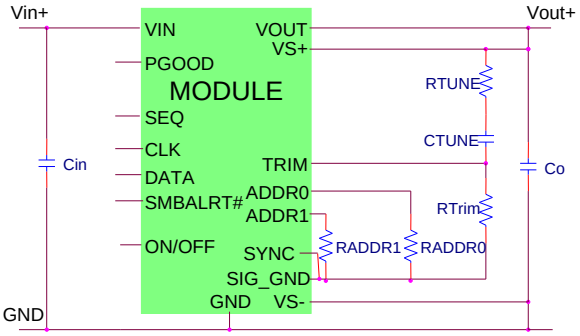

Features

- Compliant to RoHS II EU "Directive 2011/65/EU"
- Compatible in a Pb-free or SnPb reflow environment (Z versions)
- Compliant to IPC-9592 (September 2008), Category 2, Class II
- Compliant to REACH Directive (EC) No 1907/2006
- DOSA based
- Wide Input voltage range (4.5Vdc-14.4Vdc)
- Output voltage programmable from 0.51Vdc to 5.5Vdc via external resistor and PMBus™ #
- Digital interface through the PMBus™ # protocol
- Tunable Loop™ to optimize dynamic output voltage response
- Flexible output voltage sequencing EZ-SEQUENCE
- Power Good signal
- Fixed switching frequency with capability of external synchronization
- Output over current protection (non-latching)
- Over temperature protection
- Remote On/Off
- Ability to sink and source current
- Cost efficient open frame design
- Small size: 12.2 mm x 12.2 mm x 8.5 mm (0.48 in x 0.48 in x 0.334 in)
- Wide operating temperature range [-40°C to 85°C: Std; -40°C to 105°C: Ruggedized]
- *UL** 60950-1 2nd Ed. Recognized, *CSA*† C22.2 No. 60950-1-07 Certified, and *VDE*‡ (EN60950-1 2nd Ed.) Licensed
- ISO** 9001 and ISO 14001 certified manufacturing facilities

Description

The 14A Digital PicoDLynxII™ power modules are non-isolated dc-dc converters that can deliver up to 14A of output current. These modules operate over a wide range of input voltage (V_{IN} = 4.5Vdc-14.4Vdc) and provide a precisely regulated output voltage from 0.51Vdc to 5.5Vdc, programmable via an external resistor and PMBus™ control. Features include a digital interface using the PMBus™ protocol, remote On/Off, adjustable output voltage, over current and over temperature protection. The PMBus™ # interface supports a range of commands to both control and monitor the module. The module also includes the Tunable Loop™ feature that allows the user to optimize the dynamic response of the converter to match the load with reduced amount of output capacitance leading to savings on cost and PWB area.

* *UL* is a registered trademark of Underwriters Laboratories, Inc.
† *CSA* is a registered trademark of Canadian Standards Association.
‡ *VDE* is a trademark of Verband Deutscher Elektrotechniker e.V.
** ISO is a registered trademark of the International Organization of Standards

The PMBus name and logo are registered trademarks of the System Management Interface Forum (SMIF)

imagination at work

©2017 General Electric Company. All rights reserved.

14A Digital PicoDLynxII™: Non-Isolated DC-DC Power Modules

4.5Vdc –14.4Vdc input; 0.51Vdc to 5.5Vdc output; 14A Output Current

Absolute Maximum Ratings

Stresses in excess of the absolute maximum ratings can cause permanent damage to the device. These are absolute stress ratings only, functional operation of the device is not implied at these or any other conditions in excess of those given in the operations sections of the data sheet. Exposure to absolute maximum ratings for extended periods can adversely affect the device reliability.

Parameter	Device	Symbol	Min	Max	Unit
Input Voltage Continuous	All	V_{IN}	-0.3	15	V
VS, SMBALERT#, SEQ	All		-0.3	7	V
CLK, DATA, SYNC	All			3.6	V
Operating Ambient Temperature (see Thermal Considerations section)	All	T_A STANDARD RUGGEDIZED	-40 -40	85 105	°C
Storage Temperature	All	T_{stg}	-55	125	°C

Electrical Specifications

Unless otherwise indicated, specifications apply over all operating input voltage, resistive load, and temperature conditions.

Parameter	Device	Symbol	Min	Typ	Max	Unit
Operating Input Voltage	All	V_{IN}	4.5	—	14.4	Vdc
Maximum Input Current (V_{IN}=4.5V to 14V, I_O=$I_{O,max}$)	All	$I_{IN,max}$			14	Adc
Input No Load Current (V_{IN} = 12Vdc, I_O = 0, module enabled)	$V_{O,set}$ = 0.6 Vdc	$I_{IN,No\ load}$		39		mA
	$V_{O,set}$ = 5Vdc	$I_{IN,No\ load}$		140		mA
Input Stand-by Current (V_{IN} = 12Vdc, module disabled)	All	$I_{IN,stand\text{-}by}$		16		mA
Inrush Transient	All	I^2t			1	A^2s
Input Reflected Ripple Current, peak-to-peak (5Hz to 20MHz, 1μH source impedance; V_{IN} =4.5 to 14V, I_O= I_{Omax}; See Test Configurations)	All			32		mAp-p
Input Ripple Rejection (120Hz)	All			-74		dB
Output Voltage Set-point accuracy over entire output range						
0 to 85°C, Vo=over entire range	All	$V_{O,set}$	-0.5		+0.5	% $V_{O,set}$
-40 to 85°C, Vo=over entire range	All	$V_{O,set}$	-1		+1	% $V_{O,set}$
Voltage Regulation[1]						
Line Regulation	(V_{IN}=$V_{IN,min}$ to $V_{IN,max}$)			4		mV
	(12V_{IN}±20%)			2		mV
Load (I_O=$I_{O,min}$ to $I_{O,max}$) Regulation	All			4		mV
	≤1.2Vout			2		mV

[1] **Worst case Line and load regulation data, all temperatures, from design verification testing as per IPC9592.**

©2017 General Electric Company. All rights reserved.

14A Digital PicoDLynxII™: Non-Isolated DC-DC Power Modules

4.5Vdc –14.4Vdc input; 0.51Vdc to 5.5Vdc output; 14A Output Current

Electrical Specifications (continued)

Parameter	Device	Symbol	Min	Typ	Max	Unit
Adjustment Range (selected by an external resistor) (Some output voltages may not be possible depending on the input voltage – see Feature Descriptions Section)	All	V_O	0.6		5.5	Vdc
PMBus Adjustable Output Voltage Range	All	V_O,adj	-15	0	+10	$\%V_{O,set}$
PMBus Output Voltage Adjustment Step Size	All			0.4		$\%V_{O,set}$
Remote Sense Range	All				0.5	Vdc
Output Ripple and Noise on nominal output ($V_{IN}=V_{IN,nom}$ and $I_O=I_{O,min}$ to $I_{O,max}$ Co = 0.1µF // 5x22 µF ceramic capacitors)						
Peak-to-Peak (5Hz to 20MHz bandwidth)	All		—	38		mV_{pk-pk}
RMS (5Hz to 20MHz bandwidth)	All			11		mV_{rms}
External Capacitance[2]						
Without the Tunable Loop™						
ESR ≥ 1 mΩ	All	$C_{O,max}$	5x22	—	5x22	µF
With the Tunable Loop™						
ESR ≥ 0.15 mΩ	All	$C_{O,max}$	5x22	—	1000	µF
ESR ≥ 10 mΩ	All	$C_{O,max}$	5x22	—	10000	µF
Output Current (in either sink or source mode)	All	I_o	0		14	Adc
Output Current Limit Inception (Hiccup Mode) (current limit does not operate in sink mode)	All	$I_{O,lim}$		130		$\% I_{o,max}$
Output Short-Circuit Current (V_O≤250mV) (Hiccup Mode)	All	$I_{O,s/c}$		10.2		Arms
Efficiency	$V_{O,set}$ = 0.6Vdc	η		78.1%		%
V_{IN}= 12Vdc, T_A=25°C	$V_{O,set}$ = 1.2Vdc	η		87%		%
$I_O=I_{O,max}$, $V_O= V_{O,set}$	$V_{O,set}$ = 1.8Vdc	η		90.4%		%
	$V_{O,set}$ = 2.5Vdc	η		92.3%		%
	$V_{O,set}$ = 3.3Vdc	η		93.6%		%
	$V_{O,set}$ = 5.0Vdc	η		95.2%		%
Switching Frequency	All	f_{sw}		500		kHz

[2] External capacitors may require using the new Tunable Loop™ feature to ensure that the module is stable as well as getting the best transient response. See the Tunable Loop™ section for details.

©2017 General Electric Company. All rights reserved.

Electrical Specifications (continued)

Parameter	Device	Symbol	Min	Typ	Max	Unit
Frequency Synchronization	All					
Synchronization Frequency Range (2 x f_{switch})	All		950	1000	1050	kHz
High-Level Input Voltage	All	V_{IH}	2			V
Low-Level Input Voltage	All	V_{IL}			0.4	V
Minimum Pulse Width, SYNC	All	t_{SYNC}	100			ns
Maximum SYNC rise time	All	t_{SYNC_SH}	100			ns

General Specifications

Parameter	Device	Min	Typ	Max	Unit
Calculated MTBF (I_O=0.8$I_{O, max}$, T_A=40°C) Telecordia Issue 3 Method 1 Case 3	All		69, 128, 749		Hours
Weight			2.6 (0.092)		g (oz.)

Feature Specifications

Unless otherwise indicated, specifications apply overall operating input voltage, resistive load, and temperature conditions. See Feature Descriptions for additional information.

Parameter	Device	Symbol	Min	Typ	Max	Unit
On/Off Signal Interface						
(V_{IN}=$V_{IN, min}$ to $V_{IN, max}$; open collector or equivalent,						
Signal referenced to GND)						
Device code with suffix "4" – Positive Logic (See Ordering Information)						
Logic High (Module ON)						
Input High Current	All	I_{IH}		—	17	μA
Input High Voltage	All	V_{IH}	2.1	—	7	V
Logic Low (Module OFF)						
Input Low Current	All	I_{IL}	—	—	2	μA
Input Low Voltage	All	V_{IL}	-0.2	—	0.8	V
Device Code with no suffix – Negative Logic (See Ordering Information)						
(On/OFF pin is open collector/drain logic input with						
external pull-up resistor; signal referenced to GND)						
Logic High (Module OFF)						
Input High Current	All	I_{IH}	–	–	3	mA
Input High Voltage	All	V_{IH}	2.1	–	7	Vdc
Logic Low (Module ON)						
Input low Current	All	I_{IL}	–	–	0.3	mA
Input Low Voltage	All	V_{IL}	-0.2	–	0.8	Vdc

©2017 General Electric Company. All rights reserved.

14A Digital PicoDLynxII™: Non-Isolated DC-DC Power Modules

4.5Vdc –14.4Vdc input; 0.51Vdc to 5.5Vdc output; 14A Output Current

Feature Specifications (cont.)

Parameter	Device	Symbol	Min	Typ	Max	Units
Turn-On Delay and Rise Times						
($V_{IN}=V_{IN, nom}$, $I_O=I_{O, max}$, V_O to within ±1% of steady state)						
Case 1: On/Off input is enabled and then input power is applied (delay from instant at which $V_{IN} = V_{IN, min}$ until V_o = 10% of $V_{o, set}$)	All	Tdelay		1.2		msec
Case 2: Input power is applied for at least one second and then the On/Off input is enabled (delay from instant at which Von/Off is enabled until V_o = 10% of $V_{o, set}$)	All	Tdelay		1.2		msec
Output voltage Rise time (time for V_o to rise from 10% of Vo, set to 90% of Vo, set)	All	Trise		2.8		msec
Output voltage overshoot (T_A = 25°C $V_{IN}= V_{IN, min}$ to $V_{IN, max}$, $I_O = I_{O, min}$ to $I_{O, max}$) With or without maximum external capacitance					3.0	% $V_{O, set}$
Over Temperature Protection (See Thermal Considerations section)	All	T_{ref-}		135		°C
PMBus Over Temperature Warning Threshold *	All	T_{WARN}		125		°C
Tracking Accuracy (Power-Up: 2V/ms)	All	$V_{SEQ} - V_o$			100	mV
(Power-Down: 2V/ms)	All	$V_{SEQ} - V_o$			100	mV
($V_{IN, min}$ to $V_{IN, max}$; $I_{O, min}$ to $I_{O, max}$ $V_{SEQ} < V_o$)						
Input Undervoltage Lockout (Vout ≤ 3.3Vo)						
Turn-on Threshold	All			4.25		Vdc
Turn-off Threshold	All			4.05		Vdc
Hysteresis	All			0.2		Vdc
PMBus Adjustable Input Under Voltage Lockout Thresholds	All		4		14	Vdc
Resolution of Adjustable Input Under Voltage Threshold	All		250			mV
PGOOD (Power Good)						
Signal Interface Open Drain, $V_{supply} \leq$ 5VDC						
Overvoltage threshold for PGOOD ON	All			108.33		%$V_{O, set}$
Overvoltage threshold for PGOOD OFF	All			112.5		%$V_{O, set}$
Undervoltage threshold for PGOOD ON	All			91.67		%$V_{O, set}$
Undervoltage threshold for PGOOD OFF	All			87.5		%$V_{O, set}$
Pulldown resistance of PGOOD pin	All			40	70	Ω
Sink current capability into PGOOD pin	All				5	mA

* Over temperature Warning – Warning may not activate before alarm and unit may shutdown before warning

©2017 General Electric Company. All rights reserved.

14A Digital PicoDLynxII™: Non-Isolated DC-DC Power Modules

4.5Vdc –14.4Vdc input; 0.51Vdc to 5.5Vdc output; 14A Output Current

Digital Interface Specifications

Unless otherwise indicated, specifications apply over all operating input voltage, resistive load, and temperature conditions. See Feature Descriptions for additional information.

Parameter	Conditions	Symbol	Min	Typ	Max	Unit
PMBus Signal Interface Characteristics						
Input High Voltage (CLK, DATA)		V_{IH}	2.1		3.6	V
Input Low Voltage (CLK, DATA)		V_{IL}			0.8	V
Input high level current (CLK, DATA)		I_{IH}	-10		10	µA
Input low level current (CLK, DATA)		I_{IL}	-10		10	µA
Output Low Voltage (CLK, DATA, SMBALERT#)	I_{OUT}=2mA	V_{OL}			0.4	V
Output high level open drain leakage current (DATA, SMBALERT#)	V_{OUT}=3.6V	I_{OH}	0		10	µA
Pin capacitance		C_o		0.7		pF
PMBus Operating frequency range	Slave Mode	F_{PMB}	10		400	kHz
Data hold time	Receive Mode Transmit Mode	$t_{HD:DAT}$	0 300			ns
Data setup time		$t_{SU:DAT}$	250			ns
Measurement System Characteristics						
Output current measurement range		I_{RNG}	0		21	A
Output current measurement accuracy @12Vin, 25°C to 85°C		I_{ACC}	-7		7%	Max rated Current
Temperature measurement accuracy @12Vin, 0°C to 85°C		T_{ACC}		±11		°C
V_{OUT} measurement range		$V_{OUT(rng)}$	0		6	V
V_{OUT} measurement accuracy		$V_{OUT, ACC}$	-2		2	%

©2017 General Electric Company. All rights reserved.

14A Digital PicoDLynxII™: Non-Isolated DC-DC Power Modules

4.5Vdc –14.4Vdc input; 0.51Vdc to 5.5Vdc output; 14A Output Current

Characteristic Curves

The following figures provide typical characteristics for the 14A Digital PicoDLynxII™ at 0.6Vo and 25°C.

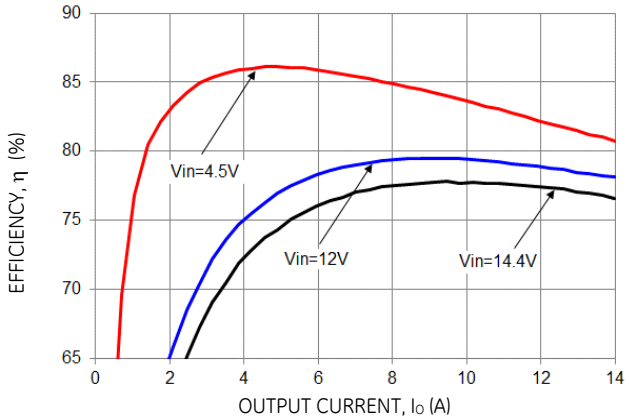

Figure 1. Converter Efficiency versus Output Current.

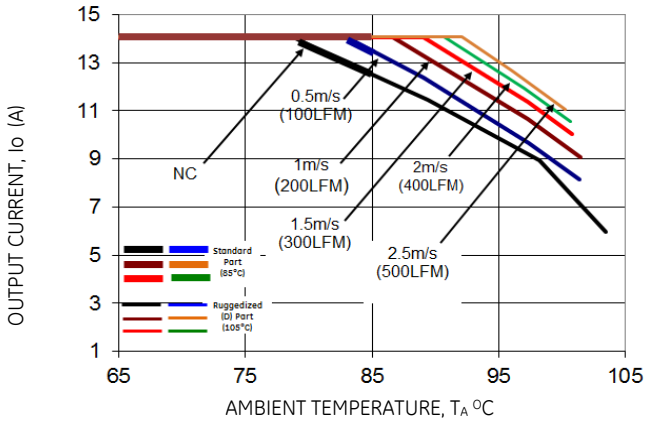

Figure 2. Derating Output Current versus Ambient Temperature and Airflow.

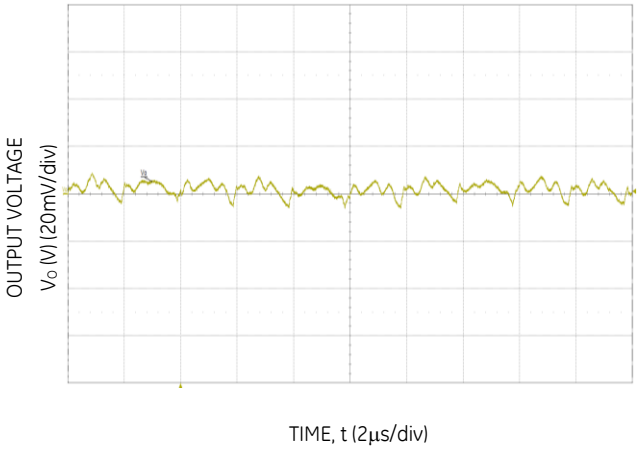

Figure 3. Typical output ripple (C_O=5x22µF ceramic, V_{IN} = 12V, I_o = $I_{o,max}$,).

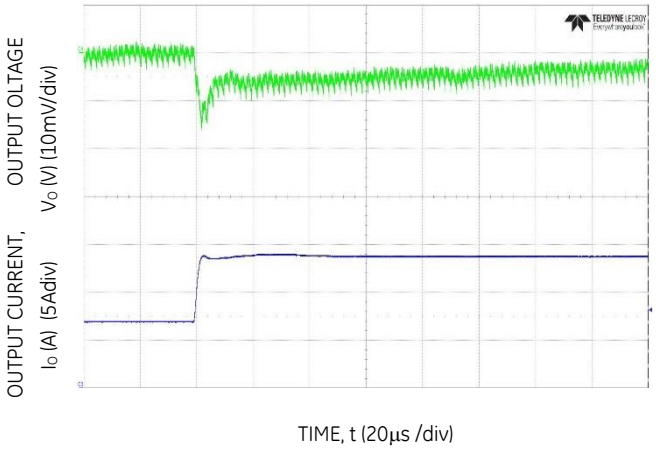

Figure 4. Transient Response to Dynamic Load Change from 50% to 100% at 12Vin, Cout=8x47uF+8x330uF CTune=27nF, RTune=300Ω

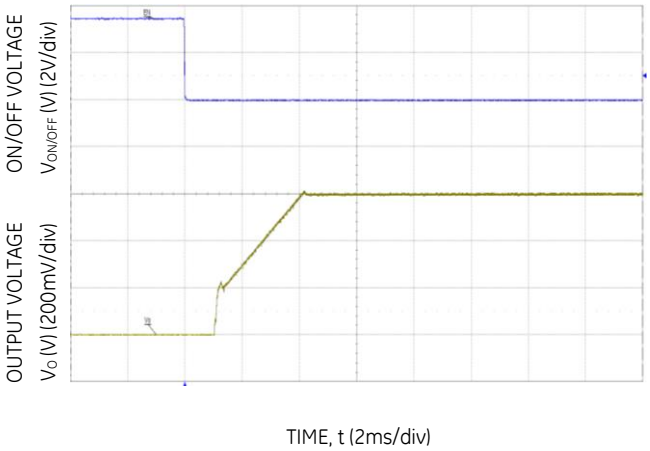

Figure 5. Typical Start-up Using On/Off Voltage (I_o = $I_{o,max}$).

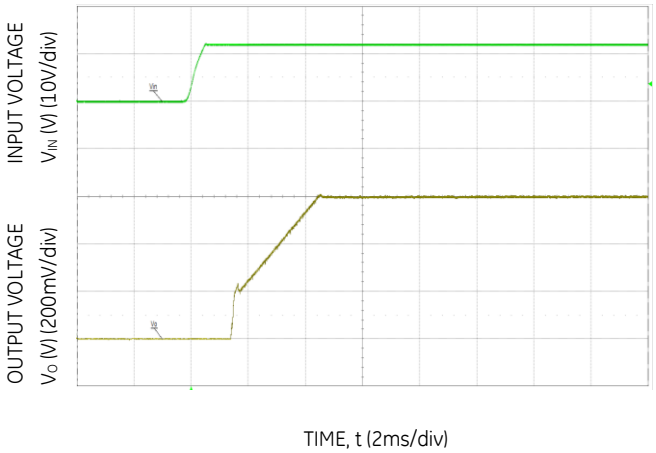

Figure 6. Typical Start-up Using Input Voltage (V_{IN} = 12V, I_o = $I_{o,max}$).

©2017 General Electric Company. All rights reserved.

14A Digital PicoDLynxII™: Non-Isolated DC-DC Power Modules

4.5Vdc –14.4Vdc input; 0.51Vdc to 5.5Vdc output; 14A Output Current

Characteristic Curves

The following figures provide typical characteristics for the 14A Digital PicoDLynxII™ at 1.2Vo and 25°C.

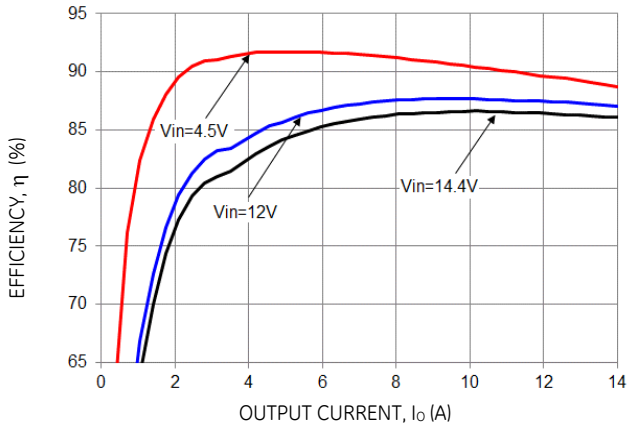

Figure 7. Converter Efficiency versus Output Current.

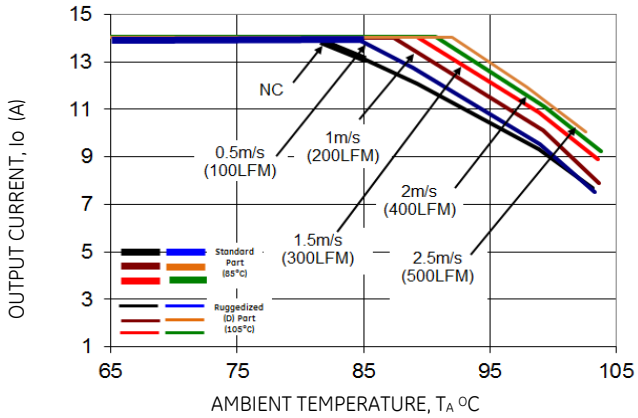

Figure 8. Derating Output Current versus Ambient Temperature and Airflow.

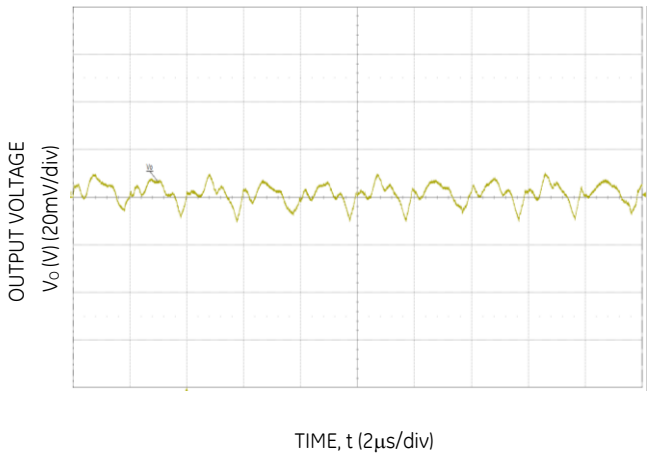

Figure 9. Typical output ripple (C_O=5x22µF ceramic, V_{IN} = 12V, I_o = $I_{o,max}$,).

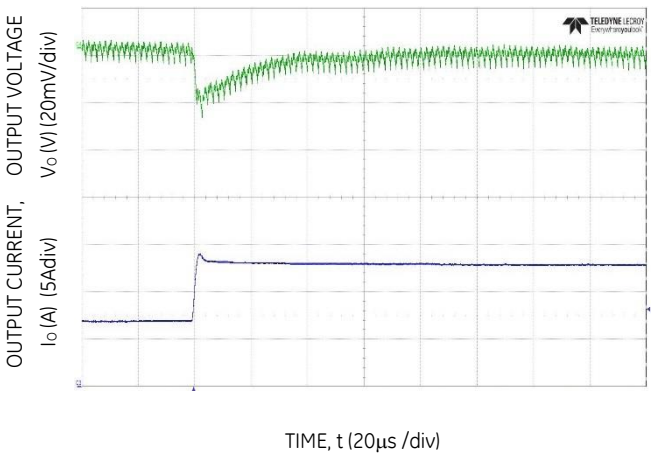

Figure 10. Transient Response to Dynamic Load Change from 50% to 100% at 12Vin, Cout=8x47uF+3x330uF CTune=3.9nF, RTune=300Ω

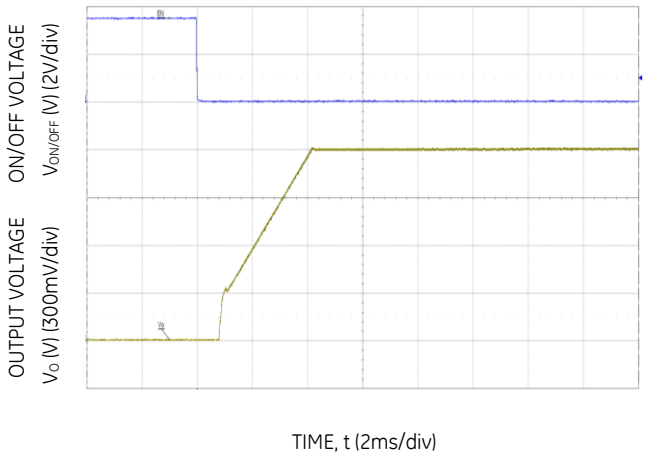

Figure 11. Typical Start-up Using On/Off Voltage (I_o = $I_{o,max}$).

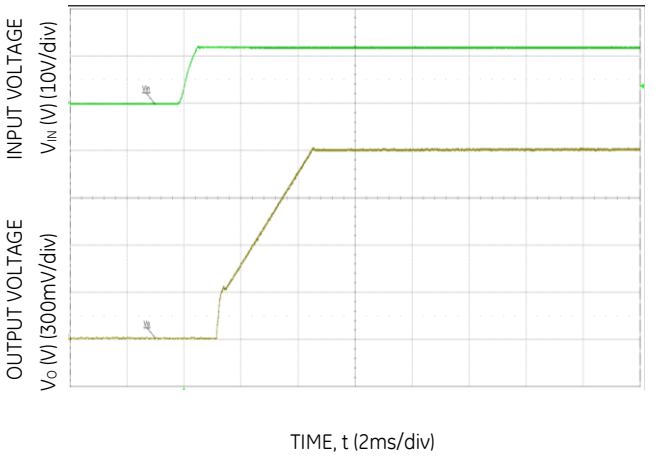

Figure 12. Typical Start-up Using Input Voltage (V_{IN} = 12V, I_o = $I_{o,max}$).

©2017 General Electric Company. All rights reserved.

14A Digital PicoDLynxII™: Non-Isolated DC-DC Power Modules

4.5Vdc –14.4Vdc input; 0.51Vdc to 5.5Vdc output; 14A Output Current

Characteristic Curves

The following figures provide typical characteristics for the 14A Digital PicoDLynxII™ at 1.8Vo and 25°C.

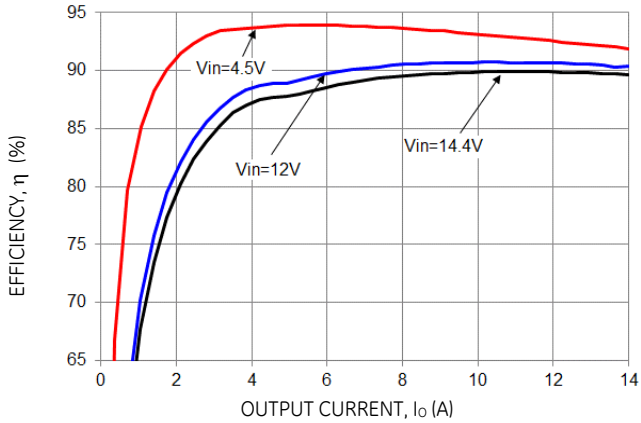

Figure 13. Converter Efficiency versus Output Current.

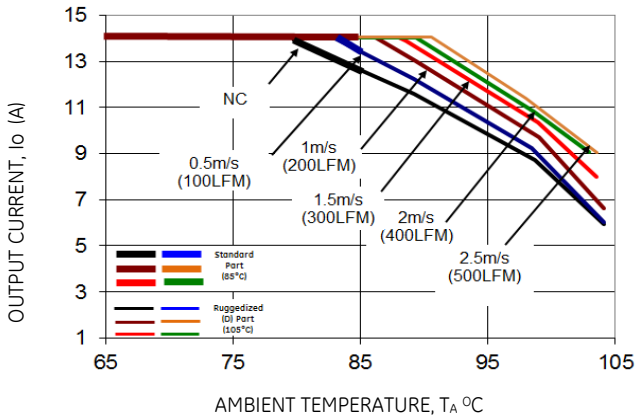

Figure 14. Derating Output Current versus Ambient Temperature and Airflow.

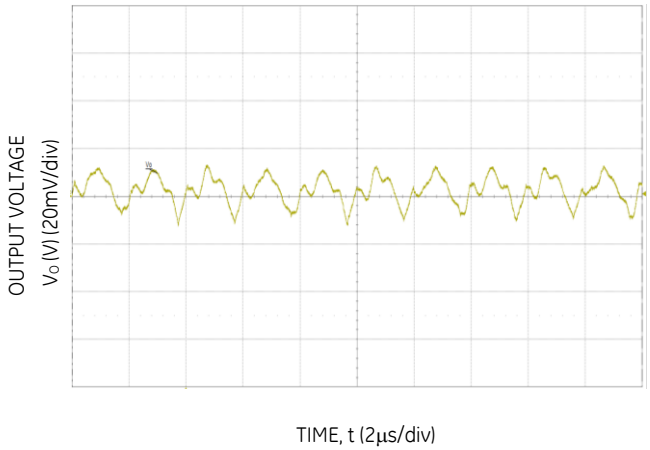

Figure 15. Typical output ripple and noise (C_O=5X22µF ceramic, V_{IN} = 12V, I_o = $I_{o,max}$,).

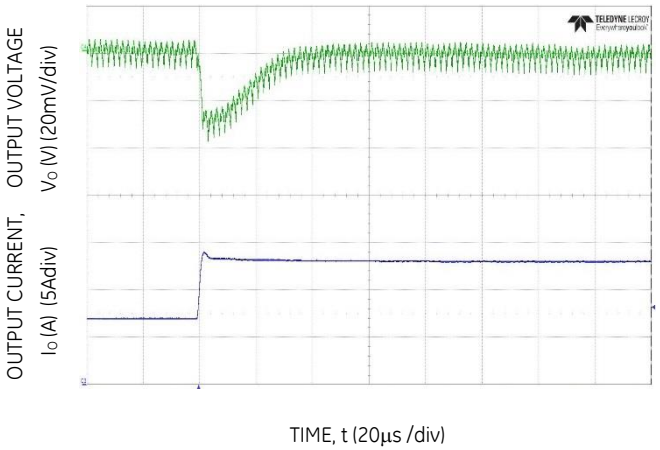

Figure 16. Transient Response to Dynamic Load Change from 50% to 100% at 12Vin, Cout=8x47uF+2x330uF CTune=1.8nF, RTune=300Ω

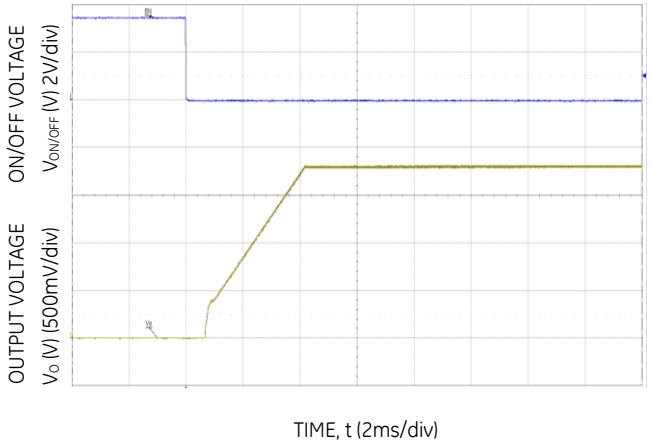

Figure 17. Typical Start-up Using On/Off Voltage (I_o = $I_{o,max}$).

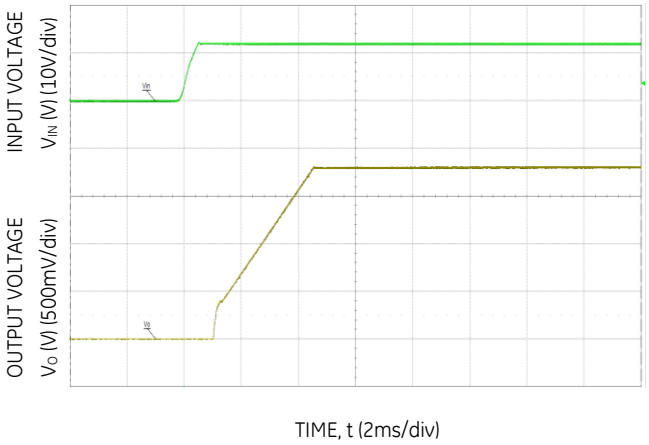

Figure 18. Typical Start-up Using Input Voltage (V_{IN} = 12V, I_o = $I_{o,max}$).

©2017 General Electric Company. All rights reserved.

14A Digital PicoDLynxII™: Non-Isolated DC-DC Power Modules

4.5Vdc –14.4Vdc input; 0.51Vdc to 5.5Vdc output; 14A Output Current

Characteristic Curves

The following figures provide typical characteristics for the 14A Digital PicoDLynxII™ at 2.5Vo and 25°C.

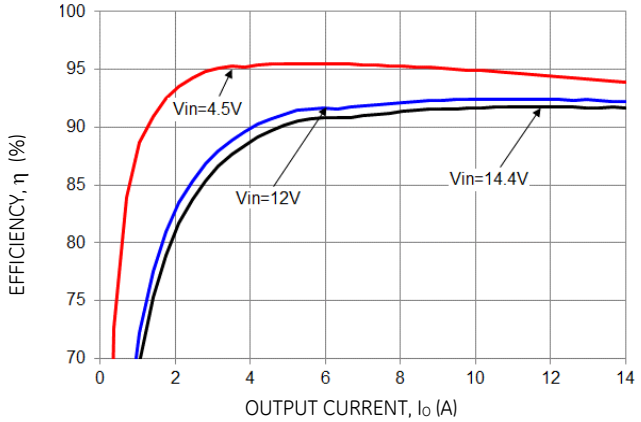

Figure 19. Converter Efficiency versus Output Current.

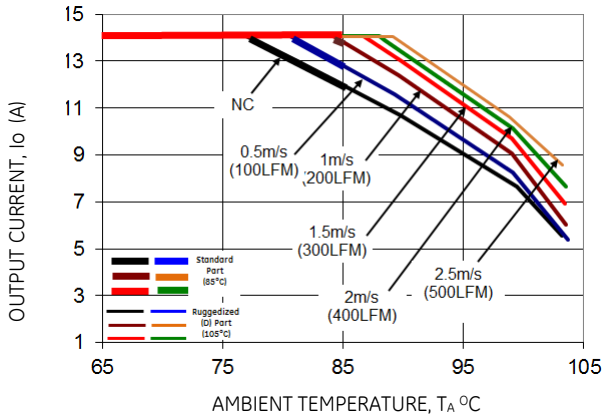

Figure 20. Derating Output Current versus Ambient Temperature and Airflow.

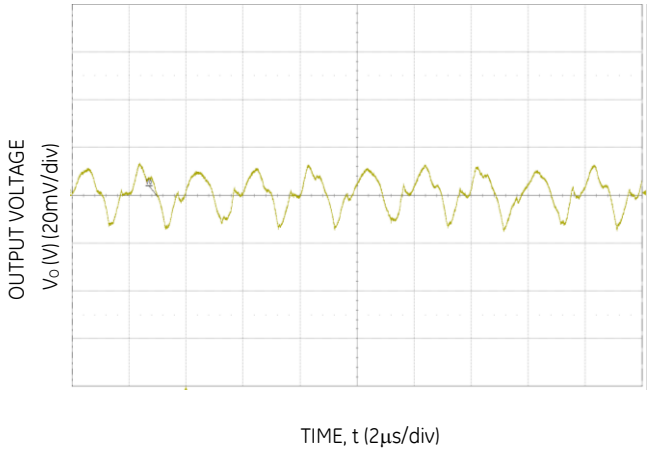

Figure 21. Typical output ripple and noise (C_O=5x22µF ceramic, V_{IN} = 12V, I_o = $I_{o,max}$,).

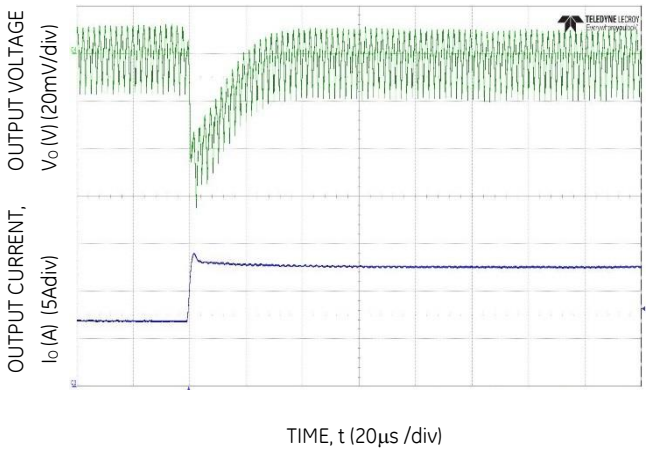

Figure 22. Transient Response to Dynamic Load Change from 50% to 100% at 12Vin, Cout =4x47uF+1x330uF CTune=1.2nF, RTune=300Ω

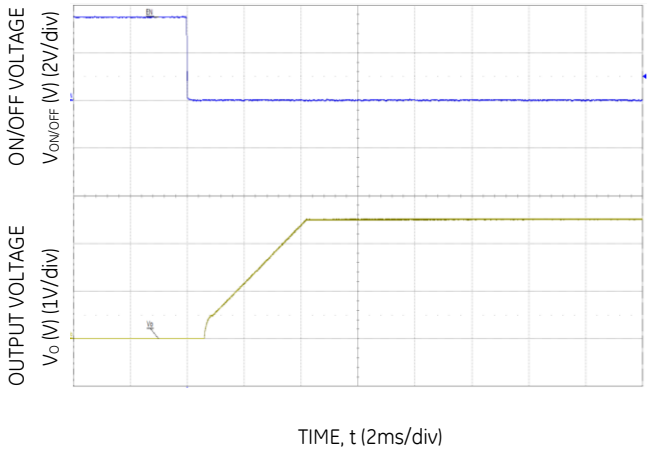

Figure 23. Typical Start-up Using On/Off Voltage (I_o = $I_{o,max}$).

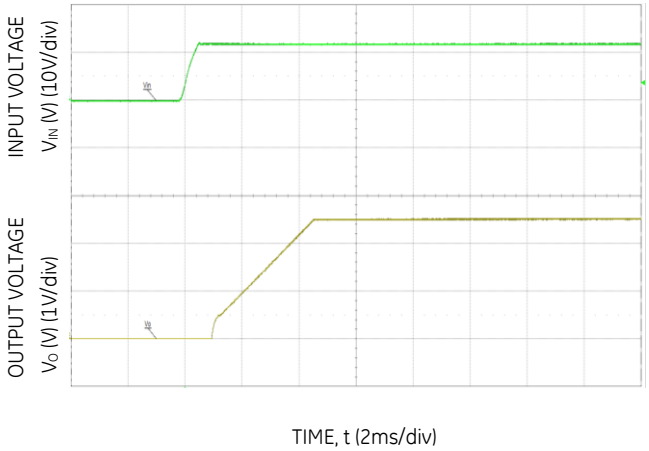

Figure 24. Typical Start-up Using Input Voltage (V_{IN} = 12V, I_o = $I_{o,max}$).

©2017 General Electric Company. All rights reserved.

14A Digital PicoDLynxII™: Non-Isolated DC-DC Power Modules

4.5Vdc –14.4Vdc input; 0.51Vdc to 5.5Vdc output; 14A Output Current

Characteristic Curves

The following figures provide typical characteristics for the 14A Digital PicoDLynxII™ at 3.3Vo and 25°C.

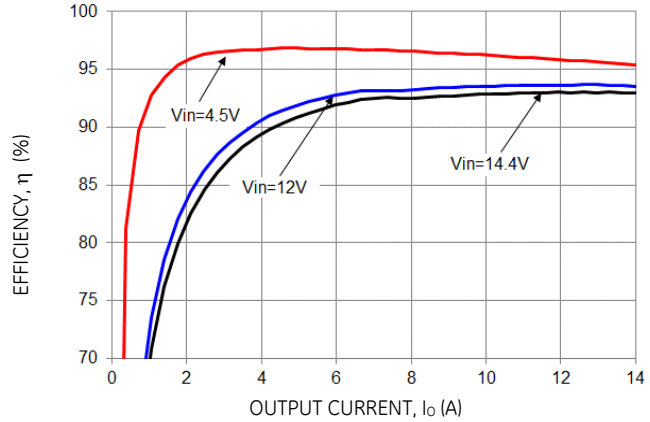

Figure 25. Converter Efficiency versus Output Current.

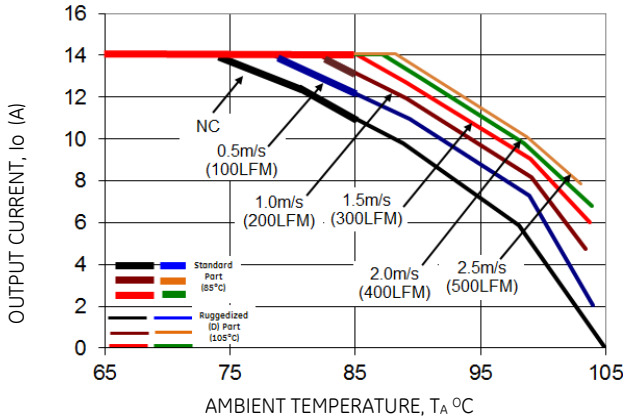

Figure 26. Derating Output Current versus Ambient Temperature and Airflow.

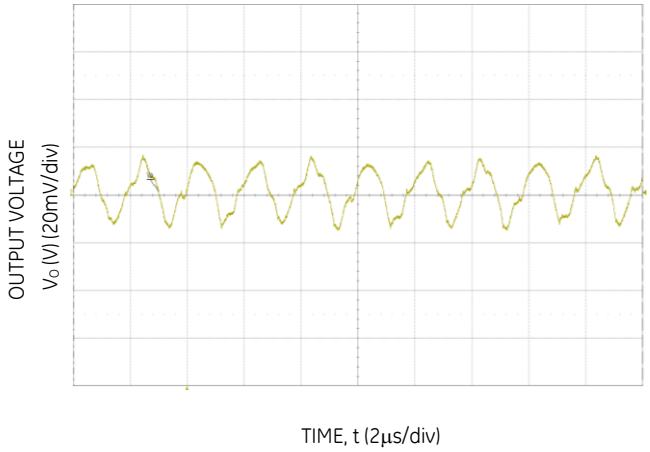

Figure 27. Typical output ripple and noise (C_O=5x22µF ceramic, V_{IN} = 12V, I_o = $I_{o,max}$,).

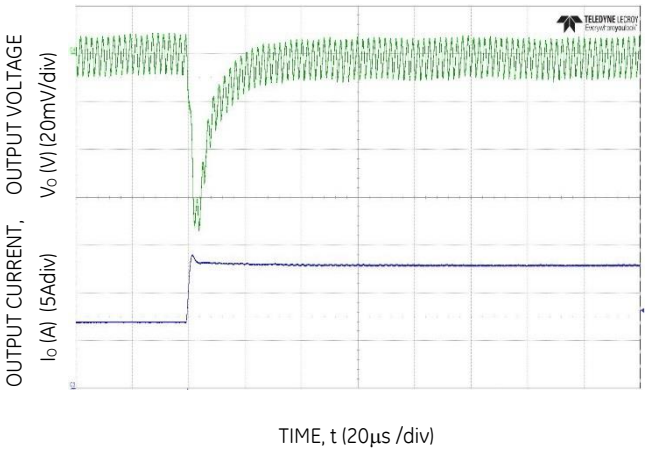

Figure 28 Transient Response to Dynamic Load Change from 50% to 100% at 12Vin, Cout=8x47uF, CTune=1.2nF, RTune=300Ω

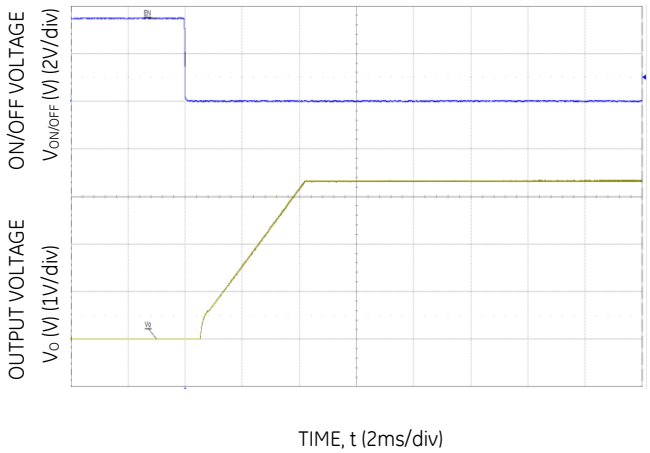

Figure 29. Typical Start-up Using On/Off Voltage (I_o = $I_{o,max}$).

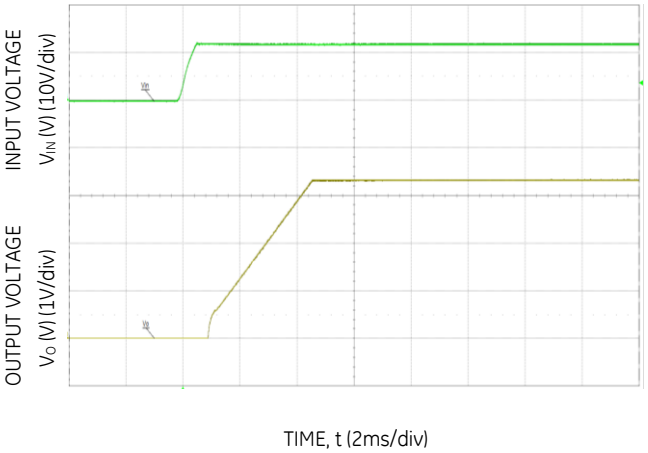

Figure 30. Typical Start-up Using Input Voltage (V_{IN} = 12V, I_o = $I_{o,max}$).

©2017 General Electric Company. All rights reserved.

14A Digital PicoDLynxII™: Non-Isolated DC-DC Power Modules

4.5Vdc –14.4Vdc input; 0.51Vdc to 5.5Vdc output; 14A Output Current

Characteristic Curves

The following figures provide typical characteristics for the 14A Digital PicoDLynxII™ at 5.0Vo and 25°C.

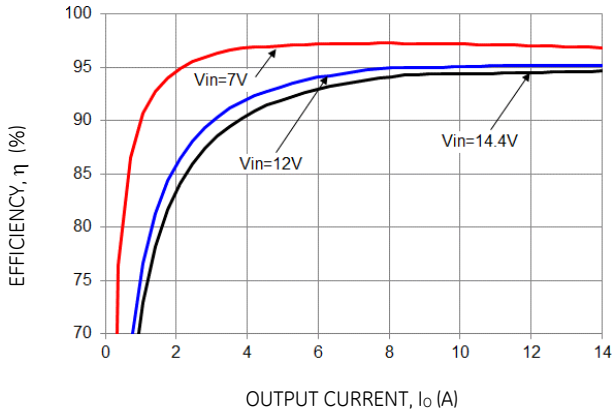

Figure 31. Converter Efficiency versus Output Current.

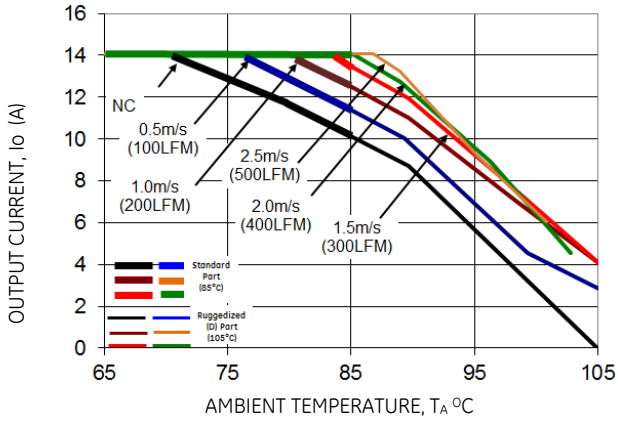

Figure 32. Derating Output Current versus Ambient Temperature and Airflow.

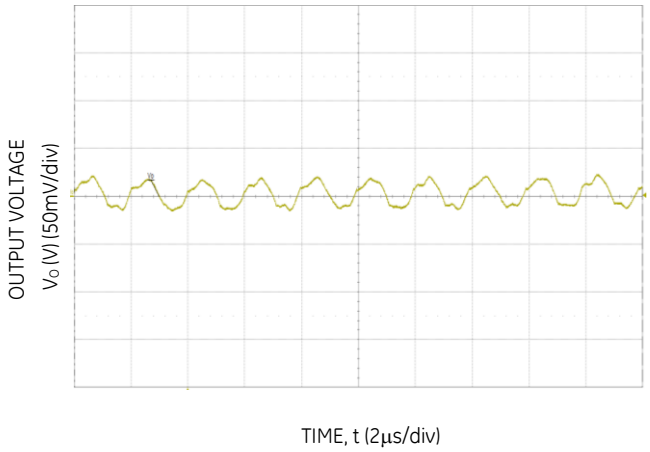

Figure 33. Typical output ripple and noise (C_O=5x22µF ceramic, V_{IN} = 12V, I_o = $I_{o,max}$,).

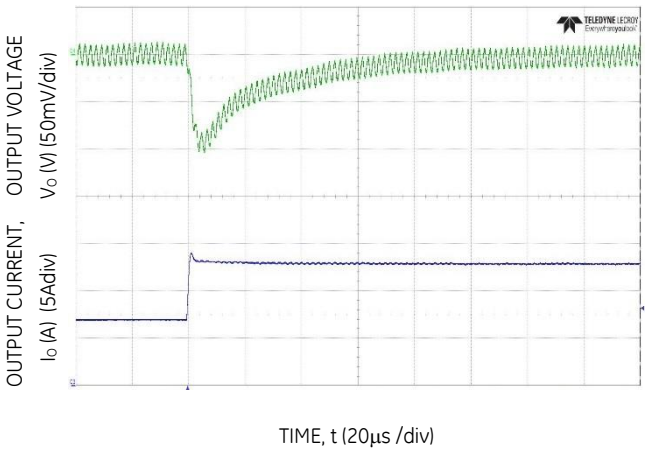

Figure 34 Transient Response to Dynamic Load Change from 50% to 100% at 12Vin, Cout=8x47uF, CTune=470pF, RTune=300Ω

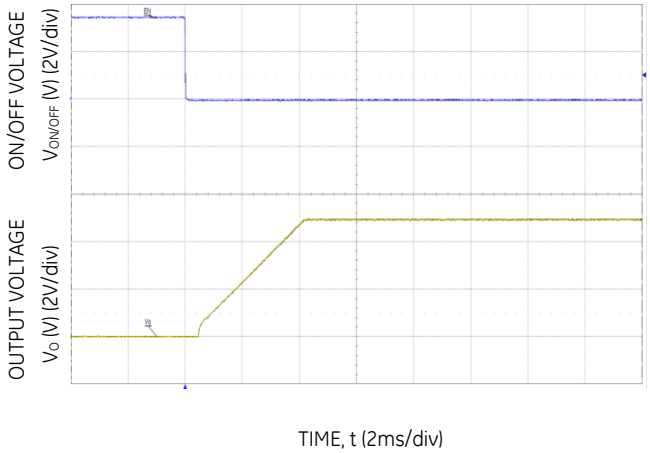

Figure 35. Typical Start-up Using On/Off Voltage (I_o = $I_{o,max}$).

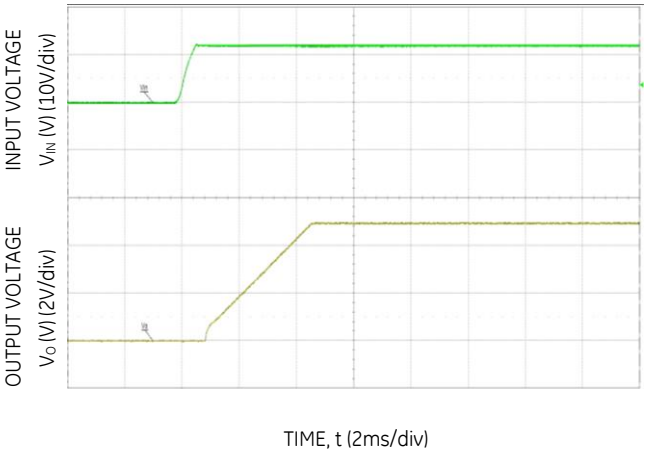

Figure 36. Typical Start-up Using Input Voltage (V_{IN} = 12V, I_o = $I_{o,max}$).

©2017 General Electric Company. All rights reserved.

14A Digital PicoDLynxII™: Non-Isolated DC-DC Power Modules

4.5Vdc –14.4Vdc input; 0.51Vdc to 5.5Vdc output; 14A Output Current

Design Considerations

Input Filtering

The 14A Digital PicoDLynxII™ module should be connected to a low ac-impedance source. A highly inductive source can affect the stability of the module. An input capacitance must be placed directly adjacent to the input pin of the module, to minimize input ripple voltage and ensure module stability.

To minimize input voltage ripple, ceramic capacitors are recommended at the input of the module. Figure 31 shows the input ripple voltage for various output voltages at 14A of load current with 2x22 µF or 4x22 µF ceramic capacitors and an input of 12V.

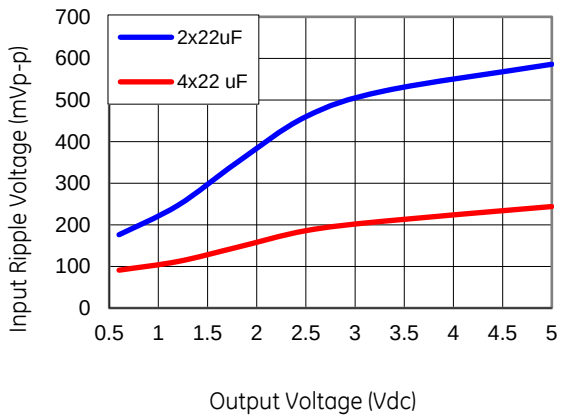

Figure 37. Input ripple voltage for various output voltages with 2x22 µF or 4x22 µF ceramic capacitors at the input (14A load). Input voltage is 12V.

Output Filtering

These modules are designed for low output ripple voltage and will meet the maximum output ripple specification with 0.1 µF ceramic and 5x22 µF ceramic capacitors at the output of the module. However, additional output filtering may be required by the system designer for a number of reasons. First, there may be a need to further reduce the output ripple and noise of the module. Second, the dynamic response characteristics may need to be customized to a particular load step change.

To reduce the output ripple and improve the dynamic response to a step load change, additional capacitance at the output can be used. Low ESR polymer and ceramic capacitors are recommended to improve the dynamic response of the module. Figure 32 provides output ripple information for different external capacitance values at various Vo and a full load current of 14A. For stable operation of the module, limit the capacitance to less than the maximum output capacitance as specified in the electrical specification table. Optimal performance of the module can be achieved by using the Tunable Loop™ feature described later in this data sheet.

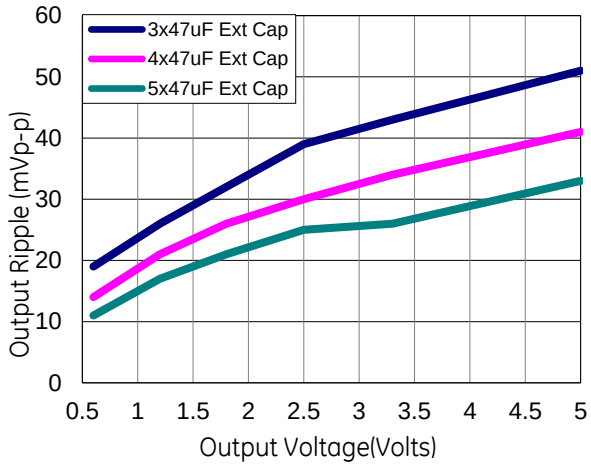

Figure 38. Output ripple voltage for various output voltages with external 3x47 µF, 4x47 µF or 5x47 µF ceramic capacitors at the output (14A load). Input voltage is 12V.

Safety Considerations

For safety agency approval the power module must be installed in compliance with the spacing and separation requirements of the end-use safety agency standards, i.e., ANSI/UL 60950-1 2nd Revised October 14, 2014, CSA C22.2 No. 60950-1-07, Second Ed. + A2:2014 (MOD), DIN EN 60950-1:2006 + A11:2009 + A1:2010 +A12:2011, + A2:2013 (VDE0805 Teil 1: 2014-08)(pending).

For the converter output to be considered meeting the requirements of safety extra-low voltage (SELV), the input must meet SELV requirements. The power module has extra-low voltage (ELV) outputs when all inputs are ELV.

An external 30A Littelfuse 456 series fast-acting fuse or equivalent is recommended on the ungrounded input lead.

©2017 General Electric Company. All rights reserved.

Analog Feature Descriptions

Remote On/Off

The module can be turned ON and OFF either by using the ON/OFF pin (Analog interface) or through the PMBus interface (Digital). The module can be configured in a number of ways through the PMBus interface to react to the two ON/OFF inputs:

- Module ON/OFF can be controlled only through the analog interface (digital interface ON/OFF commands are ignored)
- Module ON/OFF can be controlled only through the PMBus interface (analog interface is ignored)
- Module ON/OFF can be controlled by either the analog or digital interface

The default state of the module (as shipped from the factory) is to be controlled by the analog interface only. If the digital interface is to be enabled, or the module is to be controlled only through the digital interface, this change must be made through the PMBus. These changes can be made and written to non-volatile memory on the module so that it is remembered for subsequent use.

Analog On/Off

The 14A Digital PicoDLynxII™ power modules feature an On/Off pin for remote On/Off operation. Two On/Off logic options are available. In the Positive Logic On/Off option, (device code suffix "4" – see Ordering Information), the module turns ON during a logic High on the On/Off pin and turns OFF during a logic Low. With the Negative Logic On/Off option, (no device code suffix, see Ordering Information), the module turns OFF during logic High and ON during logic Low. The On/Off signal should be always referenced to ground. For either On/Off logic option, leaving the On/Off pin disconnected will turn the module ON when input voltage is present.

For positive logic modules, the circuit configuration for using the On/Off pin is shown in Figure 39. When the external transistor Q1 is in the OFF state, the internal PWM #Enable is pulled up internally, thus turning the module ON. When transistor Q1 is turned ON, the On/Off pin is pulled low, and consequently the internal PWM Enable signal is pulled low and the module is OFF.

For negative logic On/Off modules, the circuit configuration is shown in Fig. 40. The On/Off pin should be pulled high with an external pull-up resistor. When transistor Q2 is in the OFF state, the On/Off pin is pulled high, which pulls the internal ENABLE# High and the module is OFF. To turn the module ON, Q2 is turned ON pulling the On/Off pin low resulting in the PWM ENABLE# pin going Low. The maximum voltage allowed on the On/Off pin is 7V. If Vin is used as a source, then a suitable external resistor R1 must be used to ensure that the voltage on the On/Off pin does not exceed 7V.

Digital On/Off

Please see the Digital Feature Descriptions section.

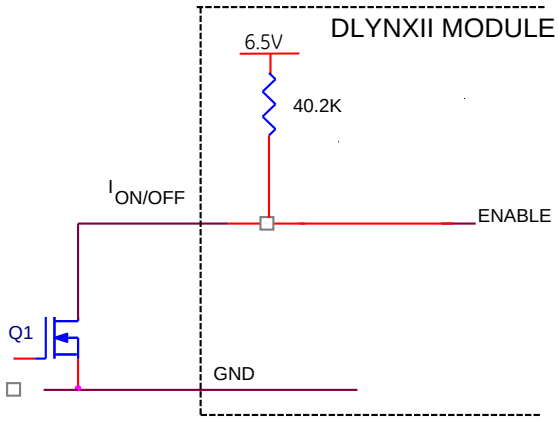

Figure 39. Circuit configuration for using positive On/Off logic.

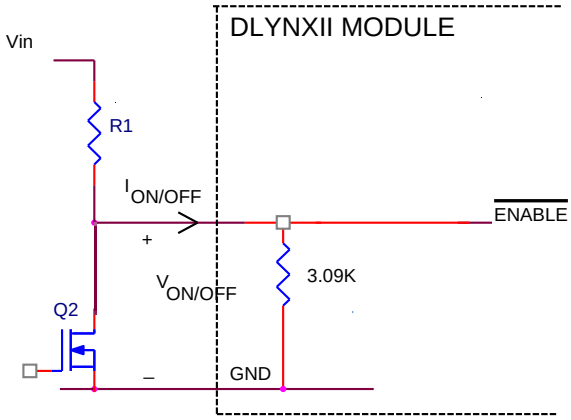

Figure 40. Circuit configuration for using negative On/Off logic.

Monotonic Start-up and Shutdown

The module has monotonic start-up and shutdown behavior for any combination of rated input voltage, output current and operating temperature range.

Startup into Pre-biased Output

The module can start into a prebiased output as long as the prebias voltage is 0.5V less than the set output voltage.

Analog Output Voltage Programming

The output voltage of the module is programmable to any voltage from 0.6dc to 5.5Vdc by connecting a resistor between the Trim and SIG_GND pins of the module. Certain restrictions apply on the output voltage set point depending on the input voltage. These are shown in the Output Voltage vs. Input Voltage Set Point Area plot in Fig. 35. The Upper Limit curve shows that for output voltages lower than 1V, the input voltage must be lower than the maximum of 14.4V. The Lower Limit curve shows that for output voltages

©2017 General Electric Company. All rights reserved.

higher than 3.3V, the input voltage needs to be higher than the minimum of 4.5V.

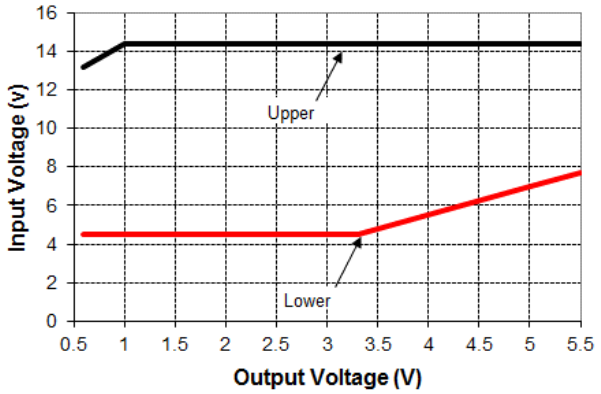

Figure 41. Output Voltage vs. Input Voltage Set Point Area plot showing limits where the output voltage can be set for different input voltages.

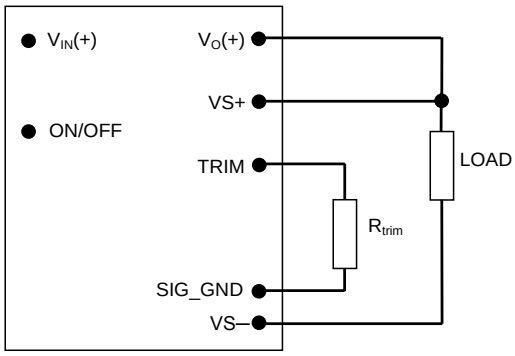

Caution *– Do not connect SIG_GND to GND elsewhere in the layout*

Figure 42. Circuit configuration for programming output voltage using an external resistor.

Without an external resistor between Trim and SIG_GND pins, the output of the module will be 0.6Vdc. To calculate the value of the trim resistor, *Rtrim* for a desired output voltage, should be as per the following equation:

$$Rtrim = \left[\frac{12}{(Vo - 0.6)}\right] k\Omega$$

Rtrim is the external resistor in kΩ

Vo is the desired output voltage.

Table 1 provides Rtrim values required for some common output voltages.

Table 1

$V_{O,\,set}$ (V)	*Rtrim* (KΩ)
0.6	Open
0.9	40
1.0	30
1.2	20
1.5	13.33
1.8	10
2.5	6.316
3.3	4.444
5.0	2.727

Digital Output Voltage Adjustment

Please see the Digital Feature Descriptions section.

Remote Sense

The power module has a Remote Sense feature to minimize the effects of distribution losses by regulating the voltage between the sense pins (VS+ and VS-). The voltage drop between the sense pins and the VOUT and GND pins of the module should not exceed 0.5V.

Analog Voltage Margining

Output voltage margining can be implemented in the module by connecting a resistor, $R_{margin\text{-}up}$, from the Trim pin to the ground pin for margining-up the output voltage and by connecting a resistor, $R_{margin\text{-}down}$, from the Trim pin to output pin for margining-down. Figure 43 shows the circuit configuration for output voltage margining. The POL Programming Tool or Power Module Wizard(PMW), available at www.gecriticalpower.com under the Downloads section, also calculates the values of $R_{margin\text{-}up}$ and $R_{margin\text{-}down}$ for a specific output voltage and % margin. Please consult your local GE technical representative for additional details.

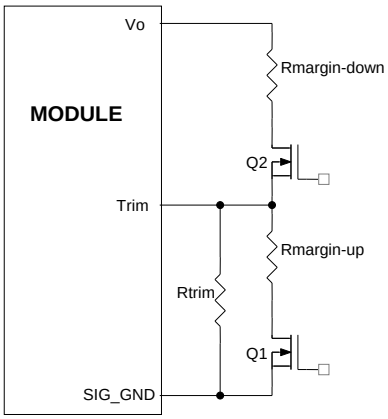

Figure 43. Circuit Configuration for margining Output voltage.

©2017 General Electric Company. All rights reserved.

Digital Output Voltage Margining

Please see the Digital Feature Descriptions section.

Output Voltage Sequencing

The power module includes a sequencing feature, EZ-SEQUENCE that enables users to implement various types of output voltage sequencing in their applications. This is accomplished via an additional sequencing pin. When not using the sequencing feature, leave it unconnected.

When an analog voltage is applied to the SEQ pin, the output voltage tracks this voltage until the output reaches the set-point voltage. The final value of the SEQ voltage must be set higher than the set-point voltage of the module. The output voltage follows the voltage on the SEQ pin on a one-to-one basis. By connecting multiple modules together, multiple modules can track their output voltages to the voltage applied on the SEQ pin.

For proper voltage sequencing, first, input voltage is applied to the module. The On/Off pin of the module is left unconnected (or tied to GND for negative logic modules or tied to V_{IN} for positive logic modules) so that the module is ON by default. After applying input voltage to the module, a minimum 10msec delay is required before applying voltage on the SEQ pin. This delay gives the module enough time to complete its internal power-up soft-start cycle. During the delay time, the SEQ pin should be held close to ground (nominally 50mV ± 20 mV). This is required to keep the internal op-amp out of saturation thus preventing output overshoot during the start of the sequencing ramp. By selecting resistor R1 (see fig. 44) according to the following equation

$$R1 = \frac{26150}{6.5 - 0.05} = 4052\text{ohms, (4.02K Std.)}$$

the voltage at the sequencing pin will be 50mV when the sequencing signal is at zero.

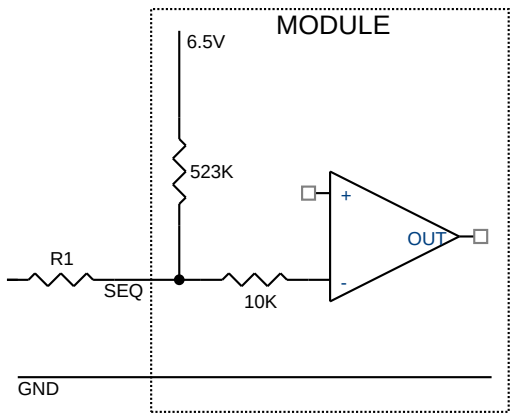

Figure 44. Circuit showing connection of the sequencing signal to the SEQ pin.

After the 10msec delay, an analog voltage is applied to the SEQ pin and the output voltage of the module will track this voltage on a one-to-one volt bases until the output reaches the set-point voltage. To initiate simultaneous shutdown of the modules, the SEQ pin voltage is lowered in a controlled manner. The output voltage of the modules tracks the voltages below their set-point voltages on a one-to-one basis. A valid input voltage must be maintained until the tracking and output voltages reach ground potential.

When using the EZ-SEQUENCE™ feature to control start-up of the module, pre-bias immunity during start-up is disabled. The pre-bias immunity feature of the module relies on the module being in the diode-mode during start-up. When using the EZ-SEQUENCE™ feature, modules goes through an internal set-up time of 10msec, and will be in synchronous rectification mode when the voltage at the SEQ pin is applied. This will result in the module sinking current if a pre-bias voltage is present at the output of the module. When pre-bias immunity during start-up is required, the EZ-SEQUENCE™ feature must be disabled. For additional guidelines on using the EZ-SEQUENCE™ feature please refer to Application Note AN04-008 "Application Guidelines for Non-Isolated Converters: Guidelines for Sequencing of Multiple Modules", or contact the GE technical representative for additional information.

Overcurrent Protection

To provide protection in a fault (output overload) condition, the unit is equipped with internal current-limiting circuitry and can endure current limiting continuously. At the point of current-limit inception, the unit enters hiccup mode. The unit operates normally once the output current is brought back into its specified range.

Digital Adjustable Overcurrent Warning

Please see the Digital Feature Descriptions section.

Overtemperature Protection

To provide protection in a fault condition, the unit is equipped with a thermal shutdown circuit. The unit will shut down if the over-temperature threshold of 135°C (typ) is exceeded at the thermal reference point T_{ref} .Please refer to Electrical characteristic table, over-temperature section on page 5. Once the unit goes into thermal shutdown it will then wait to cool before attempting to restart.

Digital Temperature Status via PMBus

Please see the Digital Feature Descriptions section.

Digitally Adjustable Output Over and Under Voltage Protection

Please see the Digital Feature Descriptions section.

Input Undervoltage Lockout

At input voltages below the input undervoltage lockout limit, the module operation is disabled. The module will begin to

©2017 General Electric Company. All rights reserved.

operate at an input voltage above the undervoltage lockout turn-on threshold.

Digitally Adjustable Input Undervoltage Lockout

Please see the Digital Feature Descriptions section.

Digitally Adjustable Power Good Thresholds

Please see the Digital Feature Descriptions section.

Synchronization

The module switching frequency can be synchronized to a signal with an external frequency within a specified range. Synchronization can be done by using the external signal applied to the SYNC pin of the module as shown in Fig. 45, with the converter being synchronized by the rising edge of the external signal. The module switches at half the SYNC frequency. The Electrical Specifications table specifies the requirements of the external SYNC signal. If the SYNC pin is not used, the module will free run at the default switching frequency. **If synchronization is not being used, connect the SYNC pin to Sig_GND**.

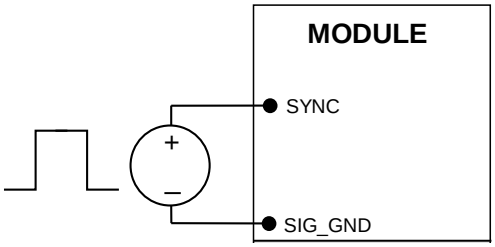

Figure 45. External source connections to synchronize switching frequency of the module.

Measuring Output Current, Output Voltage and Temperature.

Please see the Digital Feature Descriptions section.

Dual Layout

Identical dimensions and pin layout of Analog and Digital PicoDLynxII modules permit migration from one to the other without needing to change the layout. In both cases the trim resistor is connected between trim and signal ground. The output of the analog module cannot be trimmed down to 0.51V

Tunable Loop™

The module has a feature that optimizes transient response of the module called Tunable Loop™.

External capacitors are usually added to the output of the module for two reasons: to reduce output ripple and noise (see Figure 38) and to reduce output voltage deviations from the steady-state value in the presence of dynamic load current changes. Adding external capacitance however affects the voltage control loop of the module, typically causing the loop to slow down with sluggish response. Larger values of external capacitance could also cause the module to become unstable.

The Tunable Loop™ allows the user to externally adjust the voltage control loop to match the filter network connected to the output of the module. The Tunable Loop™ is implemented by connecting a series R-C between the VS+ and TRIM pins of the module, as shown in Fig. 46. This R-C allows the user to externally adjust the voltage loop feedback compensation of the module.

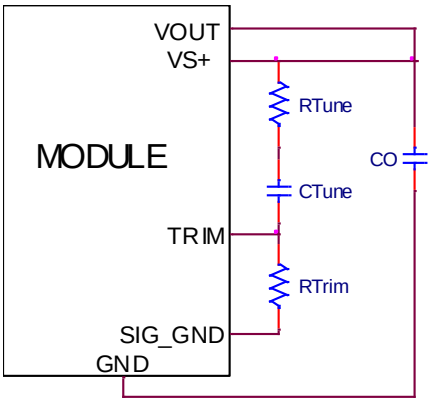

Figure. 46. Circuit diagram showing connection of R_{TUME} and C_{TUNE} to tune the control loop of the module.

Recommended values of R_{TUNE} and C_{TUNE} for different output capacitor combinations are given in Tables 2 and 3. Table 3 shows the recommended values of R_{TUNE} and C_{TUNE} for different values of ceramic output capacitors up to 1000uF that might be needed for an application to meet output ripple and noise requirements. Selecting R_{TUNE} and C_{TUNE} according to Table 3 will ensure stable operation of the module.
In applications with tight output voltage limits in the presence of dynamic current loading, additional output capacitance will be required. Table 3 lists recommended values of R_{TUNE} and C_{TUNE} in order to meet 2% output voltage deviation limits for some common output voltages in the presence of a 7A to 14A step change (50% of full load), with an input voltage of 12V.

Please contact your GE technical representative to obtain more details of this feature as well as for guidelines on how to select the right value of external R-C to tune the module for best transient performance and stable operation for other output capacitance values.

Table 2. General recommended values of of R_{TUNE} and C_{TUNE} for Vin=12V and various external ceramic capacitor combinations.

Co	4x47µF	6x47µF	8x47µF	10x47µF	20x47µF
R_{TUNE}	300	300	300	300	300
C_{TUNE}	220p	330p	390p	470p	1n

Table 3. Recommended values of R_{TUNE} and C_{TUNE} to obtain transient deviation of 2% of Vout for a 7A step load with Vin=12V.

©2017 General Electric Company. All rights reserved.

14A Digital PicoDLynxII™: Non-Isolated DC-DC Power Modules

4.5Vdc –14.4Vdc input; 0.51Vdc to 5.5Vdc output; 14A Output Current

Vo	5V	3.3V	2.5V	1.8V	1.2V	0.6V
Co	8x47uf	8x47uF	4x47uF + 1x330uF	8x47uF + 2x330uF	8x47uF + 3x330uF	8x47uF + 8x330uF
R_{TUNE}	300	300	300	300	300	300
C_{TUNE}	470pF	1200pF	1200pF	1800pF	3.9nF	27nF
ΔV	72mV	47mV	37mV	25mV	17mV	9mV

Note: The capacitors used in the Tunable Loop tables are 47 µF/3 mΩ ESR ceramic and 330 µF/9 mΩ ESR polymer capacitors.

Power Module Wizard

GE offers a free web based easy to use tool that helps users simulate the Tunable Loop performance of the PJT014. Go to http://ge.transim.com/pmd/Home and sign up for a free account and use the module selector tool. The tool also offers downloadable Simplis/Simetrix models that can be used to assess transient performance, module stability, etc.

©2017 General Electric Company. All rights reserved.

Digital Feature Descriptions

PMBus Interface Capability

The 14A Digital PicoDLynxII™ power modules have a PMBus interface that supports both communication and control. The PMBus Power Management Protocol Specification can be obtained from www.pmbus.org. The modules support a subset of version 1.1 of the specification (see Table 6 for a list of the specific commands supported). Most module parameters can be programmed using PMBus and stored as defaults for later use.

All communication over the module PMBus interface must support the Packet Error Checking (PEC) scheme. The PMBus master must generate the correct PEC byte for all transactions, and check the PEC byte returned by the module.

The module also supports the SMBALERT# response protocol whereby the module can alert the bus master if it wants to talk. For more information on the SMBus alert response protocol, see the System Management Bus (SMBus) specification.

The module has non-volatile memory that is used to store configuration settings. Not all settings programmed into the device are automatically saved into this non-volatile memory, only those specifically identified as capable of being stored can be saved (see Table 6 for which command parameters can be saved to non-volatile storage).

PMBus Data Format

For commands that set thresholds, voltages or report such quantities, the module supports the "Linear" data format among the three data formats supported by PMBus. The Linear Data Format is a two byte value with an 11-bit, two's complement mantissa and a 5-bit, two's complement exponent. The format of the two data bytes is shown below:

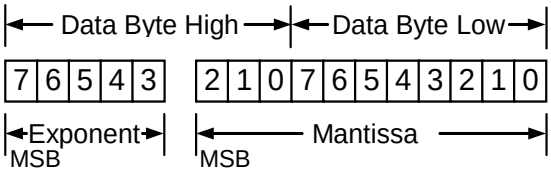

The value is of the number is then given by

$$\text{Value} = \text{Mantissa} \times 2^{\text{Exponent}}$$

PMBus Addressing

The power module can be addressed through the PMBus using a device address. The module has 64 possible addresses (0 to 63 in decimal) which can be set using resistors connected from the ADDR0 and ADDR1 pins to GND. Note that some of these addresses (0, 1, 2, 3, 4, 5, 6, 7, 8, 9, 10, 11 12, 40, 44, 45, 55 in decimal) are reserved according to the SMBus specifications and may not be useable. The address is set in the form of two octal (0 to 7) digits, with each pin setting one digit. The ADDR1 pin sets the high order digit and ADDR0 sets the low order digit. The resistor values suggested for each digit are shown in Table 4 (1% tolerance resistors are recommended). Note that if either address resistor value is outside the range specified in Table 4, the module will respond to address 127.

Table 4

Digit	Resistor Value (KΩ)
0	11
1	18.7
2	27.4
3	38.3
4	53.6
5	82.5
6	127
7	187

The user must know which I²C addresses are reserved in a system for special functions and set the address of the module to avoid interfering with other system operations. Both 100kHz and 400kHz bus speeds are supported by the module. Connection for the PMBus interface should follow the High Power DC specifications given in section 3.1.3 in the SMBus specification V2.0 for the 400kHz bus speed or the Low Power DC specifications in section 3.1.2. The complete SMBus specification is available from the SMBus web site, smbus.org.

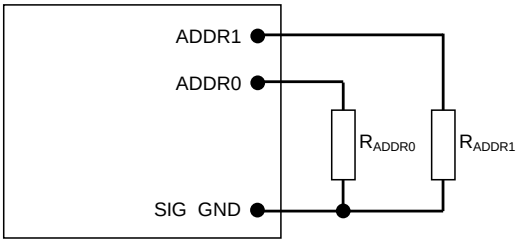

Figure 47. Circuit showing connection of resistors used to set the PMBus address of the module.

Operation (01h)

This is a paged register. The OPERATION command can be use to turn the module on or off in conjunction with the ON/OFF pin input. It is also used to margin up or margin down the output voltage

PMBus Enabled On/Off

The module can also be turned on and off via the PMBus interface. The OPERATION command is used to actually turn the module on and off via the PMBus, while the ON_OFF_CONFIG command configures the combination of analog ON/OFF pin input and PMBus commands needed to turn the module on and off. Bit [7] in the OPERATION command data byte enables the module, with the following functions:

0 : Output is disabled
1 : Output is enabled

This module uses the lower five bits of the ON_OFF_CONFIG data byte to set various ON/OFF options as follows:

©2017 General Electric Company. All rights reserved.

Bit Position	4	3	2	1	0
Access	r/w	r/w	r/w	r/w	r
Function	PU	CMD	CPR	POL	CPA
Default Value	***1***	***0***	***1***	***1***	***0***

PU: Sets the default to either operate any time input power is present or for the ON/OFF to be controlled by the analog ON/OFF input and the PMBus OPERATION command. This bit is used together with the CP, CMD and ON bits to determine startup.

Bit Value	Action
0	Module powers up any time power is present regardless of state of the analog ON/OFF pin
1	Module does not power up until commanded by the analog ON/OFF pin and the OPERATION command as programmed in bits [2:0] of the ON_OFF_CONFIG register.

CMD: The CMD bit controls how the device responds to the OPERATION command.

Bit Value	Action
0	Module ignores the ON bit in the OPERATION command
1	Module responds to the ON bit in the OPERATION command

CPR: Sets the response of the analog ON/OFF pin. This bit is used together with the CMD, PU and ON bits to determine startup.

Bit Value	Action
0	Module ignores the analog ON/OFF pin, i.e. ON/OFF is only controlled through the PMBUS via the OPERATION command
1	Module requires the analog ON/OFF pin to be asserted to start the unit

CPA: Sets the action of the analog ON/OFF pin when turning the controller OFF. This bit is internally read and cannot be modified by the user

PMBus Adjustable Soft Start Rise Time

The soft start rise time can be adjusted in the module via PMBus. When setting this parameter, make sure that the charging current for output capacitors can be delivered by the module in addition to any load current to avoid nuisance tripping of the overcurrent protection circuitry during startup. The TON_RISE command sets the rise time in ms, and allows choosing soft start times between 600µs and 9ms, with possible values listed in Table 5. Note that the exponent is fixed at -4 (decimal) and the upper two bits of the mantissa are also fixed at 0.

Table 5

Rise Time	Exponent	Mantissa
600µs	11100	00000001010
900µs	11100	00000001110
1.2ms	11100	00000010011
1.8ms	11100	00000011101
2.7ms	11100	00000101011
4.2ms	11100	00001000011
6.0ms	11100	00001100000
9.0ms	11100	00010010000

©2017 General Electric Company. All rights reserved.

Output Voltage Adjustment Using the PMBus

The VREF_TRIM parameter is important for a number of PMBus commands related to output voltage trimming, and margining. Each of the 2 output voltages of the module can be set as the combination of the voltage divider formed by RTrim and a 20kΩ upper divider resistor inside the module, and the internal reference voltage of the module. The reference voltage V_{REF} is be nominally set at 600mV, and the output regulation voltage is then given by:

$$V_{OUT} = \left[\frac{20000 + RTrim}{RTrim}\right] \times V_{REF}$$

Hence the module output voltage is dependent on the value of RTrim which is connected external to the module.

The VREF_TRIM parameter is used to apply a fixed offset voltage to the reference voltage can be specified using the "Linear" format and two bytes. The exponent is fixed at –9 (decimal). The resolution of the adjustment is 7 bits, with a resulting step size of approximately 0.4%. The maximum trim range is -20% to +10% of the nominal reference voltage(600mV) in 2mV steps. Possible values range from -120mV to +60mV. The exception is at 0.6Vout where the allowable trim range is only -90mV to +60mV to prevent the module from operating at lower than 0.51Vdc. When trimming the voltage below 0.6V, the module max. input voltage operating point also reduces proportionally. As shown earlier in Fig.41, the maximum permissible input voltage is 13V. For any voltage trimmed below 0.6V, the maximum input voltage will have to be reduced by the same factor.

When PMBus commands are used to trim or margin the output voltage, the value of V_{REF} is what is changed inside the module, which in turn changes the regulated output voltage of the module.

The nominal output voltage of the module is adjustable with a minimum step size of 0.4% over a +10% to -20% range from nominal using the VREF_TRIM command over the PMBus.

The VREF_TRIM command can be used to apply a fixed offset voltage to either of the output voltage command value using the "Linear" mode with the exponent fixed at –9 (decimal). The value of the offset voltage is given by

$$V_{REF\,(offset)} = VREF_TRIM \times 2^{-9}$$

This offset voltage is added to the voltage set through the divider ratio and nominal V_{REF} to produce the trimmed output voltage. If a value outside of the +10%/-20% adjustment range is given with this command, the module will set it's output voltage to the upper or lower limit value (as if VOUT_TRIM, assert SMBALRT#, set the CML bit in STATUS_BYTE and the invalid data bit in STATUS_CML.

Applications Example

For a design where the output voltage is 1.8V and the output needs to be trimmed down by 20mV.

• The internal reference voltage is 0.6V. So we need to determine how the 20mV translates to a change in the internal reference voltage.

- Divider Ratio = Vref/Vout = 0.6/1.8 = 0.33
- Hence a 20mV change at 1.8Vo requires a 0.33x20mV = 6.6mV change in the reference voltage.
- Vref(offset) = - (6.6)/1000 = - 0.0066 Volts (- sign since we are trimming down)
- $V_{ref(offset)} = V_{ref_Trim} \times 2^{-9}$
- $V_{ref_Trim} = V_{ref(offset)} \times 512$
- V_{ref_Trim} = -0.0066 x 512 = -3.3 = -3 (rounded to nearest integer

Output Voltage Margining Using the PMBus

The module can also have its output margined via PMBus commands. The command STEP_VREF_MARGIN_HIGH will set the margin high voltage, while the command STEP_VREF_MARGIN_LOW sets the margin low voltage. Both the STEP_VREF_MARGIN_HIGH and STEP_VREF_MARGIN_LOW commands will use the "Linear" mode with the exponent fixed at –9 (decimal). Two bytes are used for the mantissa with the upper bit [7] of the high byte fixed at 0. The actual margined output voltage is a combination of the STEP_VREF_MARGIN_HIGH or STEP_VREF_MARGIN_LOW and the VREF_TRIM values as shown below. The net permissible voltage range change is -30% to +10% for the margin high command and -20% to 0% for the margin low command

$$V_{REF\,(MH)} = (STEP_VREF_MARGIN_HIGH + VREF_TRIM) \times 2^{-9}$$

Applications Example

For a design where the output voltage is 1.2V and the output needs to be trimmed up by 100mV (within 10% of Vo).

• The internal reference voltage is 0.6V. So we need to determine how the 100mV translates to a change in the internal reference voltage.

- Divider Ratio = Vref/Vout = 0.6/1.2 = 0.5
- Hence a 100mV change at 1.2Vo requires a 0.5x100mV = 50mV change in the reference voltage.
- $V_{REF(MH)}$ = (50)/1000 = 0.05 Volts
- $V_{REF(MH)} = (Step_V_{ref_margin_high} + V_{ref_trim}) \times 2^{-9}$
- Assume V_{ref_Trim} = 0 here
- $Step_V_{ref_margin_high} = V_{REF(MH)} \times 512$
- $Step_V_{ref_margin_high}$ = 0.05 x 25.6 = 26 (rounded to nearest integer

$$V_{REF\,(ML)} = (STEP_VREF_MARGIN_LOW + VREF_TRIM) \times 2^{-9}$$

Applications Example

For a design where the output voltage is 1.8V and the output needs to be trimmed down by 100mV (within -20% of Vo).

• The internal reference voltage is 0.6V. So we need to determine how the 100mV translates to a change in the internal reference voltage.

- Divider Ratio = Vref/Vout = 0.6/1.8 = 0.33
- Hence a 100mV change at 1.2Vo requires a 0.33x100mV = 33mV change in the reference voltage.

©2017 General Electric Company. All rights reserved.

- $V_{REF(MH)}$ = -(33)/1000 = - 0.033 Volts (- sign since we are margining down)
- $V_{REF(ML)}$ = (Step_$V_{ref_margin_low}$ + V_{ref_trim}) x 2^{-9}
- Assume V_{ref_Trim} = - 3 here (from V_{Ref_Trim} example earlier)
- Step_$V_{ref_margin_low}$ = $V_{REF(ML)}$ x 512 - V_{ref_trim}
- Step_$V_{ref_margin_low}$ = -0.033 x 512 – (-3) = -16.9+3 = -13.9 = -14 (rounded to nearest integer

The module will support the margined high or low voltages using the OPERATION command. Bits [5:2] are used to enable margining as follows:

- 00XX : Margin Off
- 0101 : Margin Low (Act on Fault)
- 0110 : Margin Low (Act on Fault)
- 1001 : Margin High (Act on Fault)
- 1010 : Margin High (Act on Fault)

PMBus Adjustable Overcurrent Warning

The module can provide an overcurrent warning via the PMBus. The threshold for the overcurrent warning can be set using the parameter IOUT_OC_WARN_LIMIT. This command uses the "Linear" data format with a two byte data word where the upper five bits [7:3] of the high byte represent the exponent and the remaining three bits of the high byte [2:0] and the eight bits in the low byte represent the mantissa. The exponent is fixed at –1 (decimal). The upper five bits of the mantissa are fixed at 0 while the lower six bits are programmable with a default value of 19A (decimal). The resolution of this warning limit is 500mA. The value of the IOUT_OC_WARN_LIMIT can be stored to non-volatile memory using the STORE_DEFAULT_ALL command

Temperature Status via PMBus

The module will provide information related to temperature of the module through the READ_TEMPERATURE_2 command. The command returns external temperature in degrees Celsius. This command will use the "Linear" data format with a two byte data word where the upper five bits [7:3] of the high byte will represent the exponent and the remaining three bits of the high byte [2:0] and the eight bits in the low byte will represent the mantissa. The exponent is fixed at 0 (decimal). The lower 11 bits are the result of the ADC conversion of the external temperature

PMBus Adjustable Output Over, Under Voltage Protection and Power Good

The module has a common command to set the PGOOD, VOUT_UNDER_VOLTAGE(UV) and VOUT_OVER_VOLTAGE (OV) limits as a percentage of nominal. Refer to Table 6 of the next section for the available settings. The PMBus command VOUT_OVER_VOLTAGE (OV) is used to set the output over voltage threshold from two possible values: +12.5% or +16.67% of the commanded output voltage for each output.

The module provides a Power Good (PGOOD) that is implemented with an open-drain output to indicate that the output voltage is within the regulation limits of the power module. The PGOOD signal is de-asserted to a low state if any condition such as overtemperature, overcurrent or loss of regulation occurs that would result in the output voltage going outside the specified thresholds. The PGOOD thresholds are user selectable via the PMBus (the default values are as shown in the Feature Specifications Section). Each threshold is set up symmetrically above and below the nominal value. The PGL (POWERGOODLOW) command will set the output voltage level above which PGOOD is asserted (lower threshold). The PGH(POWERGOODHIGH) command will set the level above which the PGOOD command is de-asserted. This command will also set two thresholds symmetrically placed around the nominal output voltage. Normally, the PGL threshold is set higher than the PGH threshold.

The PGOOD terminal can be connected through a pullup resistor (suggested value 100KΩ) to a source of 5VDC or lower. The current through the PGood terminal should be limited to a max value of 5mA

PMBus Adjustable Input Undervoltage Lockout

The module allows for adjustment of the input under voltage lockout and hysteresis. The command VIN_ON allows setting the input voltage turn on threshold for each output, while the VIN_OFF command will set the input voltage turn off threshold. For the VIN_ON command, possible values are 4.25V to 16V in variable steps. For the VIN_OFF command, possible values are 4V to 15.75V in 0.5V steps. If other values are entered for either command, they is mapped to the closest of the allowed values.

Both the VIN_ON and VIN_OFF commands use the "Linear" format with two data bytes. The upper five bits will represent the exponent (fixed at -2) and the remaining 11 bits will represent the mantissa. For the mantissa, the four most significant bits are fixed at 0.

Measurement of Output Current and Voltage .

The module is capable of measuring key module parameters such as output current and voltage and providing this information through the PMBus interface.

Measuring Output Current Using the PMBus

The module measures current by using the inductor winding resistance as a current sense element. The inductor winding resistance is then the current gain factor used to scale the measured voltage into a current reading. This gain factor is the argument of the IOUT_CAL_GAIN command, and consists of two bytes in the linear data format. The exponent uses the upper five bits [7:3] of the high data byte in two-s complement format and is fixed at –4 (decimal). The remaining 11 bits in two's complement binary format represent the mantissa. During manufacture, each module is calibrated by measuring and storing the current gain factor into non-volatile storage. DONOT CHANGE THE FACTORY PROGRAMMED VALUE.

The current measurement accuracy is also improved by each module being calibrated during manufacture with the offset in the current reading. The IOUT_CAL_OFFSET command is used to store and read the current offset. The

©2017 General Electric Company. All rights reserved.

argument for this command consists of two bytes composed of a 5-bit exponent (fixed at -4d) and a 11-bit mantissa. This command has a resolution of 62.5mA and a range of -4000mA to +3937.5mA. DONOT CHANGE THE FACTORY PROGRAMMED VALUE.

The READ_IOUT command provides module average output current information. This command only supports positive or current sourced from the module. If the converter is sinking current a reading of 0 is provided. The READ_IOUT command returns two bytes of data in the linear data format. The resolution of the command is 62.5mA. The exponent uses the upper five bits [7:3] of the high data byte in two-s complement format and is fixed at –4 (decimal). The remaining 11 bits in two's complement binary format represent the mantissa with the 11th bit fixed at 0 since only positive numbers are considered valid.

Measuring Output Voltage Using the PMBus

The module provides output voltage information using the READ_VOUT command for each output. In this module the output voltage is sensed at the remote sense amplifier output pin so voltage drop to the load is not accounted for. The command will return two bytes of data all representing the mantissa while the exponent is fixed at -9 (decimal).

Reading the Status of the Module using the PMBus

The module supports a number of status information commands implemented in PMBus. However, not all features are supported in these commands. A 1 in the bit position indicates the fault that is flagged.

STATUS_BYTE : Returns one byte of information with a summary of the most critical device faults.

Bit Position	Flag	Default Value
7	X	0
6	OFF	0
5	VOUT Overvoltage	0
4	IOUT Overcurrent	0
3	VIN Undervoltage	0
2	Temperature	0
1	CML (Comm. Memory Fault)	0
0	None of the above	0

STATUS_WORD : Returns two bytes of information with a summary of the module's fault/warning conditions.

Low Byte

Bit Position	Flag	Default Value
7	X	0
6	OFF	0
5	VOUT Overvoltage	0
4	IOUT Overcurrent	0
3	VIN Undervoltage	0
2	Temperature	0
1	CML (Comm. Memory Fault)	0
0	None of the above	0

High Byte

Bit Position	Flag	Default Value
7	VOUT fault or warning	0
6	IOUT fault or warning	0
5	X	0
4	MFR	0
3	POWER_GOOD# (is negated)	0
2	X	0
1	X	0
0	X	0

STATUS_VOUT : Returns one byte of information relating to the status of the module's output voltage related faults.

Bit Position	Flag	Default Value
7	VOUT OV Fault	0
6	X	0
5	X	0
4	VOUT UV Fault	0
3	X	0
2	X	0
1	X	0
0	X	0

STATUS_IOUT : Returns one byte of information relating to the status of the module's output voltage related faults.

Bit Position	Flag	Default Value
7	IOUT OC Fault	0
6	X	0
5	IOUT OC Warning	0
4	X	0
3	X	0
2	X	0
1	X	0
0	X	0

STATUS_TEMPERATURE : Returns one byte of information relating to the status of the module's temperature related faults.

Bit Position	Flag	Default Value
7	OT Fault	0
6	OT Warning	0
5	X	0
4	X	0
3	X	0
2	X	0
1	X	0
0	X	0

STATUS_CML : Returns one byte of information relating to the status of the module's communication related faults.

Bit Position	Flag	Default Value

©2017 General Electric Company. All rights reserved.

7	Invalid/Unsupported Command	0
6	Invalid/Unsupported Command	0
5	Packet Error Check Failed	0
4	Memory Fault Detected	0
3	X	0
2	X	0
1	Other Communication Fault	0
0	X	0

MFR_VIN_MIN : Returns minimum input voltage as two data bytes of information in Linear format (upper five bits are exponent – fixed at -2, and lower 11 bits are mantissa in two's complement format – fixed at 12)

MFR_VOUT_MIN : Returns minimum output voltage as two data bytes of information in Linear format (upper five bits are exponent – fixed at -10, and lower 11 bits are mantissa in two's complement format – fixed at 614)

MFR_SPECIFIC_00 : Returns information related to the type of module and revision number. Bits [7:2] in the Low Byte indicate the module type (010001 corresponds to the PJT014 series of module), while bits [7:3] indicate the revision number of the module.

Low Byte

Bit Position	Flag	Default Value
7:2	Module Name	010001
1:0	Reserved	10

High Byte

Bit Position	Flag	Default Value
7:3	Module Revision Number	None
2:0	Reserved	000

©2017 General Electric Company. All rights reserved.

Summary of Supported PMBus Commands

Please refer to the PMBus 1.1 specification for more details of these commands.

Table 6

<table>
<tr><th>Hex Code</th><th>Command</th><th>Brief Description</th><th>Non-Volatile Memory Storage</th></tr>
<tr><td>01</td><td>OPERATION</td><td>Turn Module on or off. Also used to margin the output voltage
<table>
<tr><th>Format</th><th colspan="8">Unsigned Binary</th></tr>
<tr><td>Bit Position</td><td>7</td><td>6</td><td>5</td><td>4</td><td>3</td><td>2</td><td>1</td><td>0</td></tr>
<tr><td>Access</td><td>r/w</td><td>r</td><td>r/w</td><td>r/w</td><td>r/w</td><td>r/w</td><td>r</td><td>r</td></tr>
<tr><td>Function</td><td>On</td><td>X</td><td colspan="4">Margin</td><td>X</td><td>X</td></tr>
<tr><td>Default Value</td><td>0</td><td>0</td><td>0</td><td>0</td><td>0</td><td>0</td><td>X</td><td>X</td></tr>
</table>
Bit 7: 0 Output switching disabled
1 Output switching enabled
Margin: 00XX Margin Off
0101 Margin Low (Act on fault)
0110 Margin Low (Act on fault)
1001 Margin High (Act on fault)
1010 Margin High (Act on fault)</td><td></td></tr>
<tr><td>02</td><td>ON_OFF_CONFIG</td><td>Configures the ON/OFF functionality as a combination of analog ON/OFF pin and PMBus commands
<table>
<tr><th>Format</th><th colspan="8">Unsigned Binary</th></tr>
<tr><td>Bit Position</td><td>7</td><td>6</td><td>5</td><td>4</td><td>3</td><td>2</td><td>1</td><td>0</td></tr>
<tr><td>Access</td><td>r</td><td>r</td><td>r</td><td>r/w</td><td>r/w</td><td>r/w</td><td>r/w</td><td>r</td></tr>
<tr><td>Function</td><td>X</td><td>X</td><td>X</td><td>pu</td><td>cmd</td><td>cpr</td><td>pol</td><td>cpa</td></tr>
<tr><td>Default Value</td><td>0</td><td>0</td><td>0</td><td>1</td><td>0</td><td>1</td><td>1</td><td>0</td></tr>
</table>
Refer to Page 19 for details on pu, cmd, cpr, pol and cpa</td><td>YES</td></tr>
<tr><td>03</td><td>CLEAR_FAULTS</td><td>Clear any fault bits that may have been set, also releases the SMBALERT# signal if the device has been asserting it.</td><td></td></tr>
<tr><td>10</td><td>WRITE_PROTECT</td><td>Used to control writing to the module via PMBus. Copies the current register setting in the module whose command code matches the value in the data byte into non-volatile memory (EEPROM) on the module
<table>
<tr><th>Format</th><th colspan="8">Unsigned Binary</th></tr>
<tr><td>Bit Position</td><td>7</td><td>6</td><td>5</td><td>4</td><td>3</td><td>2</td><td>1</td><td>0</td></tr>
<tr><td>Access</td><td>r/w</td><td>r/w</td><td>r/w</td><td>x</td><td>x</td><td>x</td><td>x</td><td>x</td></tr>
<tr><td>Function</td><td>bit7</td><td>bit6</td><td>bit5</td><td>X</td><td>X</td><td>X</td><td>X</td><td>X</td></tr>
<tr><td>Default Value</td><td>0</td><td>0</td><td>0</td><td>X</td><td>X</td><td>X</td><td>X</td><td>X</td></tr>
</table>
Bit5: 0 – Enables all writes as permitted in bit6 or bit7
1 – Disables all writes except the WRITE_PROTECT, PAGE OPERATION and ON_OFF_CONFIG (bit 6 and bit7 must be 0)
Bit 6: 0 – Enables all writes as permitted in bit5 or bit7
1 – Disables all writes except for the WRITE_PROTECT, PAGE and OPERATION commands (bit5 and bit7 must be 0)
Bit7: 0 – Enables all writes as permitted in bit5 or bit6
1 – Disables all writes except for the WRITE_PROTECT command (bit5 and bit6 must be 0)</td><td>YES</td></tr>
<tr><td>15</td><td>STORE_USER_ALL</td><td>Stores all of the current storable register settings in the EEPROM memory as the new defaults on power up</td><td></td></tr>
<tr><td>16</td><td>RESTORE_USER_ALL</td><td>Restores all of the storable register settings from the non-volatile memory (EEPROM). The command should not be used while the device is actively switching</td><td></td></tr>
<tr><td>19</td><td>CAPABILITY</td><td>This command helps the host system/GUI/CLI determine key capabilities of the module
<table>
<tr><th>Format</th><th colspan="8">Unsigned Binary</th></tr>
<tr><td>Bit Position</td><td>7</td><td>6</td><td>5</td><td>4</td><td>3</td><td>2</td><td>1</td><td>0</td></tr>
<tr><td>Access</td><td>r</td><td>r</td><td>r</td><td>r</td><td>r</td><td>r</td><td>r</td><td>r</td></tr>
<tr><td>Function</td><td>PEC</td><td colspan="2">SPD</td><td>ALRT</td><td colspan="4">Reserved</td></tr>
<tr><td>Default Value</td><td>1</td><td>0</td><td>1</td><td>1</td><td>0</td><td>0</td><td>0</td><td>0</td></tr>
</table>
PEC – 1 Supported
SPD -01 – max of 400kHZ
ALRT – 1 – SMBALERT# supported</td><td></td></tr>
</table>

©2017 General Electric Company. All rights reserved.

<table>
<tr><th>Hex Code</th><th>Command</th><th>Brief Description</th><th>Non-Volatile Memory Storage</th></tr>
<tr><td>20</td><td>VOUT_MODE</td><td>The module has MODE set to Linear and Exponent set to -10. These values cannot be changed
<table>
<tr><td>Bit Position</td><td>7</td><td>6</td><td>5</td><td>4</td><td>3</td><td>2</td><td>1</td><td>0</td></tr>
<tr><td>Access</td><td>r</td><td>r</td><td>r</td><td>r</td><td>r</td><td>r</td><td>r</td><td>r</td></tr>
<tr><td>Function</td><td colspan="3">Mode</td><td colspan="5">Exponent</td></tr>
<tr><td>Default Value</td><td>0</td><td>0</td><td>0</td><td>1</td><td>0</td><td>1</td><td>1</td><td>1</td></tr>
</table>
Mode: Value fixed at 000, linear mode
Exponent: Value fixed at 10111, Exponent for linear mode values is -9</td><td></td></tr>
<tr><td>35</td><td>VIN_ON</td><td>Sets the value of input voltage at which the module turns on
<table>
<tr><td>Format</td><td colspan="7">Linear, two's complement binary</td></tr>
<tr><td>Bit Position</td><td>7</td><td>6</td><td>5</td><td>4</td><td>3</td><td>2</td><td>1</td><td>0</td></tr>
<tr><td>Access</td><td>r</td><td>r</td><td>r</td><td>r</td><td>r</td><td>r</td><td>r</td><td>r</td></tr>
<tr><td>Function</td><td colspan="5">Exponent</td><td colspan="3">Mantissa</td></tr>
<tr><td>Default Value</td><td>1</td><td>1</td><td>1</td><td>1</td><td>0</td><td>0</td><td>0</td><td>0</td></tr>
<tr><td>Bit Position</td><td>7</td><td>6</td><td>5</td><td>4</td><td>3</td><td>2</td><td>1</td><td>0</td></tr>
<tr><td>Access</td><td>r</td><td>r/w</td><td>r/w</td><td>r/w</td><td>r/w</td><td>r/w</td><td>r/w</td><td>r/w</td></tr>
<tr><td>Function</td><td colspan="8">Mantissa</td></tr>
<tr><td>Default Value</td><td>0</td><td>0</td><td>0</td><td>1</td><td>0</td><td>0</td><td>0</td><td>1</td></tr>
</table>
Exponent -2 (dec), fixed
Mantissa
The upper four bits are fixed at 0
The lower seven are programmable with a default value of 9(dec). This corresponds to a default of 4.25V. Allowable values are

4.25, in steps of 0.25V upto 9.5V.
9.5V to 13V in increments of 0.5V
13V to 16V in increments of 1V
</td><td>YES</td></tr>
<tr><td>36</td><td>VIN_OFF</td><td>Sets the value of input voltage at which the module turns off
<table>
<tr><td>Format</td><td colspan="7">Linear, two's complement binary</td></tr>
<tr><td>Bit Position</td><td>7</td><td>6</td><td>5</td><td>4</td><td>3</td><td>2</td><td>1</td><td>0</td></tr>
<tr><td>Access</td><td>r</td><td>r</td><td>r</td><td>r</td><td>r</td><td>r</td><td>r</td><td>r</td></tr>
<tr><td>Function</td><td colspan="5">Exponent</td><td colspan="3">Mantissa</td></tr>
<tr><td>Default Value</td><td>1</td><td>1</td><td>1</td><td>1</td><td>0</td><td>0</td><td>0</td><td>0</td></tr>
<tr><td>Bit Position</td><td>7</td><td>6</td><td>5</td><td>4</td><td>3</td><td>2</td><td>1</td><td>0</td></tr>
<tr><td>Access</td><td>r</td><td>r/w</td><td>r/w</td><td>r/w</td><td>r/w</td><td>r/w</td><td>r/w</td><td>r/w</td></tr>
<tr><td>Function</td><td colspan="8">Mantissa</td></tr>
<tr><td>Default Value</td><td>0</td><td>0</td><td>0</td><td>0</td><td>1</td><td>0</td><td>0</td><td>0</td></tr>
</table>
Exponent -2 (dec), fixed
Mantissa
The upper four bits are fixed at 0
The lower seven are programmable with a default value of 8(dec). This corresponds to a default of 4.0V.
Allowable values are

4.00, in steps of 0.25V upto 9.75V.
10.25V to 11.75V in increments of 0.5V
12V
13.75V to 15.75V in increments of 1V
</td><td>YES</td></tr>
<tr><td>38</td><td>IOUT_CAL_GAIN</td><td>Returns the value of the gain correction term used to correct the measured output current
<table>
<tr><td>Format</td><td colspan="7">Linear, two's complement binary</td></tr>
<tr><td>Bit Position</td><td>7</td><td>6</td><td>5</td><td>4</td><td>3</td><td>2</td><td>1</td><td>0</td></tr>
<tr><td>Access</td><td>r</td><td>r</td><td>r</td><td>r</td><td>r</td><td>r</td><td>r</td><td>r/w</td></tr>
<tr><td>Function</td><td colspan="5">Exponent</td><td colspan="3">Mantissa</td></tr>
<tr><td>Default Value</td><td>1</td><td>0</td><td>0</td><td>0</td><td>1</td><td>0</td><td>0</td><td>V</td></tr>
<tr><td>Bit Position</td><td>7</td><td>6</td><td>5</td><td>4</td><td>3</td><td>2</td><td>1</td><td>0</td></tr>
<tr><td>Access</td><td>r/w</td><td>r/w</td><td>r/w</td><td>r/w</td><td>r/w</td><td>r/w</td><td>r/w</td><td>r/w</td></tr>
<tr><td>Function</td><td colspan="8">Mantissa</td></tr>
<tr><td>Default Value</td><td colspan="8">V: Variable based on factory calibration</td></tr>
</table></td><td>YES</td></tr>
</table>

©2017 General Electric Company. All rights reserved.

<table>
<tr><th>Hex Code</th><th>Command</th><th>Brief Description</th><th>Non-Volatile Memory Storage</th></tr>
<tr><td>39</td><td>IOUT_CAL_OFFSET</td><td>Returns the value of the offset correction used to correct the measured output current
<table>
<tr><th>Format</th><th colspan="8">Linear, two's complement binary</th></tr>
<tr><td>Bit Position</td><td>7</td><td>6</td><td>5</td><td>4</td><td>3</td><td>2</td><td>1</td><td>0</td></tr>
<tr><td>Access</td><td>r</td><td>r</td><td>r</td><td>r</td><td>r</td><td>r/w</td><td>r</td><td>r</td></tr>
<tr><td>Function</td><td colspan="5">Exponent</td><td colspan="3">Mantissa</td></tr>
<tr><td>Default Value</td><td>1</td><td>1</td><td>1</td><td>0</td><td>0</td><td>V</td><td>V</td><td>V</td></tr>
<tr><td>Bit Position</td><td>7</td><td>6</td><td>5</td><td>4</td><td>3</td><td>2</td><td>1</td><td>0</td></tr>
<tr><td>Access</td><td>r</td><td>r</td><td>r/w</td><td>r/w</td><td>r/w</td><td>r/w</td><td>r/w</td><td>r/w</td></tr>
<tr><td>Function</td><td colspan="8">Mantissa</td></tr>
<tr><td>Default Value</td><td colspan="8">V: Variable based on factory calibration</td></tr>
</table></td><td>YES</td></tr>
<tr><td>46</td><td>IOUT_OC_FAULT_LIMIT

Value maybe locked</td><td>Sets the output overcurrent fault level in A (cannot be changed)
<table>
<tr><th>Format</th><th colspan="8">Linear, two's complement binary</th></tr>
<tr><td>Bit Position</td><td>7</td><td>6</td><td>5</td><td>4</td><td>3</td><td>2</td><td>1</td><td>0</td></tr>
<tr><td>Access</td><td>r</td><td>r</td><td>r</td><td>r</td><td>r</td><td>r</td><td>r</td><td>r</td></tr>
<tr><td>Function</td><td colspan="5">Exponent</td><td colspan="3">Mantissa</td></tr>
<tr><td>Default Value</td><td>1</td><td>1</td><td>1</td><td>1</td><td>1</td><td>0</td><td>0</td><td>0</td></tr>
<tr><td>Bit Position</td><td>7</td><td>6</td><td>5</td><td>4</td><td>3</td><td>2</td><td>1</td><td>0</td></tr>
<tr><td>Access</td><td>r</td><td>r/w</td><td>r/w</td><td>r/w</td><td>r/w</td><td>r/w</td><td>r/w</td><td>r/w</td></tr>
<tr><td>Function</td><td colspan="8">Mantissa</td></tr>
<tr><td>Default Value</td><td>0</td><td>0</td><td>1</td><td>0</td><td>1</td><td>1</td><td>1</td><td>1</td></tr>
</table></td><td>YES</td></tr>
<tr><td>47</td><td>IOUT_OC_FAULT_RESPONSE</td><td>Determines module action in response to an IOU_OC_FAULT_LIMIT or a VOUT undervoltage (UV) fault
<table>
<tr><th>Format</th><th colspan="8">Unsigned Binary</th></tr>
<tr><td>Bit Position</td><td>7</td><td>6</td><td>5</td><td>4</td><td>3</td><td>2</td><td>1</td><td>0</td></tr>
<tr><td>Access</td><td>r</td><td>r</td><td>r/w</td><td>r/w</td><td>r/w</td><td>r</td><td>r</td><td>r</td></tr>
<tr><td>Function</td><td>X</td><td>X</td><td>RS [2]</td><td>RS [1]</td><td>RS [0]</td><td>x</td><td>X</td><td>X</td></tr>
<tr><td>Default Value</td><td>0</td><td>0</td><td>1</td><td>1</td><td>1</td><td>1</td><td>0</td><td>0</td></tr>
</table>
RS[2:0] – Retry Setting
000 Unit does not attempt to restart
111 Unit goes through normal soft start continuously
Any other value is not acceptable</td><td>YES</td></tr>
<tr><td>4A</td><td>IOUT_OC_WARN_LIMIT

Value may be locked</td><td>Sets the output overcurrent warning level in A
<table>
<tr><th>Format</th><th colspan="8">Linear, two's complement binary</th></tr>
<tr><td>Bit Position</td><td>7</td><td>6</td><td>5</td><td>4</td><td>3</td><td>2</td><td>1</td><td>0</td></tr>
<tr><td>Access</td><td>r</td><td>r</td><td>r</td><td>r</td><td>r</td><td>r</td><td>r</td><td>r</td></tr>
<tr><td>Function</td><td colspan="5">Exponent</td><td colspan="3">Mantissa</td></tr>
<tr><td>Default Value</td><td>1</td><td>1</td><td>1</td><td>1</td><td>1</td><td>0</td><td>0</td><td>0</td></tr>
<tr><td>Bit Position</td><td>7</td><td>6</td><td>5</td><td>4</td><td>3</td><td>2</td><td>1</td><td>0</td></tr>
<tr><td>Access</td><td>r</td><td>r/w</td><td>r/w</td><td>r/w</td><td>r/w</td><td>r/w</td><td>r/w</td><td>r/w</td></tr>
<tr><td>Function</td><td colspan="8">Mantissa</td></tr>
<tr><td>Default Value</td><td>0</td><td>0</td><td>1</td><td>0</td><td>1</td><td>1</td><td>0</td><td>0</td></tr>
</table></td><td></td></tr>
<tr><td>4F</td><td>OT_FAULT_LIMIT

Value may be locked</td><td>Sets the overtemperature fault level in °C
<table>
<tr><th>Format</th><th colspan="8">Linear, two's complement binary</th></tr>
<tr><td>Bit Position</td><td>7</td><td>6</td><td>5</td><td>4</td><td>3</td><td>2</td><td>1</td><td>0</td></tr>
<tr><td>Access</td><td>r</td><td>r</td><td>r</td><td>r</td><td>r</td><td>r</td><td>r</td><td>r</td></tr>
<tr><td>Function</td><td colspan="5">Exponent</td><td colspan="3">Mantissa</td></tr>
<tr><td>Default Value</td><td>0</td><td>0</td><td>0</td><td>0</td><td>0</td><td>0</td><td>0</td><td>0</td></tr>
<tr><td>Bit Position</td><td>7</td><td>6</td><td>5</td><td>4</td><td>3</td><td>2</td><td>1</td><td>0</td></tr>
<tr><td>Access</td><td>r/w</td><td>r/w</td><td>r/w</td><td>r/w</td><td>r/w</td><td>r/w</td><td>r/w</td><td>r/w</td></tr>
<tr><td>Function</td><td colspan="8">Mantissa</td></tr>
<tr><td>Default Value</td><td>0</td><td>1</td><td>1</td><td>1</td><td>1</td><td>0</td><td>0</td><td>0</td></tr>
</table></td><td>YES</td></tr>
</table>

Table 6 (Continued)

©2017 General Electric Company. All rights reserved.

<table>
<tr><th>Hex Code</th><th>Command</th><th>Brief Description</th><th>Non-Volatile Memory Storage</th></tr>
<tr><td>51</td><td>OT_WARN_LIMIT

Value may be locked</td><td>Sets the over temperature warning level in °C
<table>
<tr><th>Format</th><th colspan="8">Linear, two's complement binary</th></tr>
<tr><td>Bit Position</td><td>7</td><td>6</td><td>5</td><td>4</td><td>3</td><td>2</td><td>1</td><td>0</td></tr>
<tr><td>Access</td><td>r</td><td>r</td><td>r</td><td>r</td><td>r</td><td>r</td><td>r</td><td>r</td></tr>
<tr><td>Function</td><td colspan="5">Exponent</td><td colspan="3">Mantissa</td></tr>
<tr><td>Default Value</td><td>0</td><td>0</td><td>0</td><td>0</td><td>0</td><td>0</td><td>0</td><td>0</td></tr>
<tr><td>Bit Position</td><td>7</td><td>6</td><td>5</td><td>4</td><td>3</td><td>2</td><td>1</td><td>0</td></tr>
<tr><td>Access</td><td>r/w</td><td>r/w</td><td>r/w</td><td>r/w</td><td>r/w</td><td>r/w</td><td>r/w</td><td>r/w</td></tr>
<tr><td>Function</td><td colspan="8">Mantissa</td></tr>
<tr><td>Default Value</td><td>0</td><td>1</td><td>1</td><td>1</td><td>0</td><td>0</td><td>1</td><td>1</td></tr>
</table></td><td>YES</td></tr>
<tr><td>61</td><td>TON_RISE</td><td>Sets the rise time of the output voltage during startup.
Supported Values – 0.6, 0.9, 1.2, 1.8, 2.7, 4.2, 6.0, 9.0msec. Value of 0 instructs unit to bring its output to programmed value as quickly as possible
<table>
<tr><th>Format</th><th colspan="8">Linear, two's complement binary</th></tr>
<tr><td>Bit Position</td><td>7</td><td>6</td><td>5</td><td>4</td><td>3</td><td>2</td><td>1</td><td>0</td></tr>
<tr><td>Access</td><td>r</td><td>r</td><td>r</td><td>r</td><td>r</td><td>r</td><td>r</td><td>r/w</td></tr>
<tr><td>Function</td><td colspan="5">Exponent</td><td colspan="3">Mantissa</td></tr>
<tr><td>Default Value</td><td>1</td><td>1</td><td>1</td><td>0</td><td>0</td><td>0</td><td>0</td><td>0</td></tr>
<tr><td>Bit Position</td><td>7</td><td>6</td><td>5</td><td>4</td><td>3</td><td>2</td><td>1</td><td>0</td></tr>
<tr><td>Access</td><td>r/w</td><td>r/w</td><td>r/w</td><td>r/w</td><td>r/w</td><td>r/w</td><td>r/w</td><td>r/w</td></tr>
<tr><td>Function</td><td colspan="8">Mantissa</td></tr>
<tr><td>Default Value</td><td>0</td><td>1</td><td>0</td><td>0</td><td>0</td><td>0</td><td>1</td><td>1</td></tr>
</table></td><td>YES</td></tr>
<tr><td>78</td><td>STATUS_BYTE</td><td>Returns one byte of information with a summary of the most critical module faults
<table>
<tr><th>Format</th><th colspan="8">Unsigned Binary</th></tr>
<tr><td>Bit Position</td><td>7</td><td>6</td><td>5</td><td>4</td><td>3</td><td>2</td><td>1</td><td>0</td></tr>
<tr><td>Access</td><td>r</td><td>r</td><td>r</td><td>r</td><td>r</td><td>r</td><td>r</td><td>r</td></tr>
<tr><td>Flag</td><td>X</td><td>OFF</td><td>VOUT_OV</td><td>IOUT_OC</td><td>VIN_UV</td><td>TEMP</td><td>CML</td><td>None of the Above</td></tr>
<tr><td>Default Value</td><td>0</td><td>0</td><td>0</td><td>0</td><td>0</td><td>0</td><td>0</td><td>0</td></tr>
</table></td><td></td></tr>
<tr><td>79</td><td>STATUS_WORD</td><td>Returns two bytes of information with a summary of the module's fault/warning conditions
<table>
<tr><th>Format</th><th colspan="8">Unsigned Binary</th></tr>
<tr><td>Bit Position</td><td>7</td><td>6</td><td>5</td><td>4</td><td>3</td><td>2</td><td>1</td><td></td></tr>
<tr><td>Access</td><td>r</td><td>r</td><td>r</td><td>r</td><td>r</td><td>r</td><td>r</td><td></td></tr>
<tr><td>Flag</td><td>VOUT</td><td>IOUT/POUT</td><td>X</td><td>MFR</td><td>$\overline{\text{PGOOD}}$</td><td>X</td><td>X</td><td></td></tr>
<tr><td>Default Value</td><td>0</td><td>0</td><td>0</td><td>0</td><td>0</td><td>0</td><td>0</td><td></td></tr>
<tr><td>Bit Position</td><td>7</td><td>6</td><td>5</td><td>4</td><td>3</td><td>2</td><td>1</td><td></td></tr>
<tr><td>Access</td><td>r</td><td>r</td><td>r</td><td>r</td><td>r</td><td>r</td><td>r</td><td></td></tr>
<tr><td>Flag</td><td>X</td><td>OFF</td><td>VOUT_OV</td><td>IOUT_OC</td><td>VIN_UV</td><td>TEMP</td><td>CML</td><td>Na
ab</td></tr>
<tr><td>Default Value</td><td>0</td><td>X</td><td>0</td><td>0</td><td>0</td><td>0</td><td>0</td><td></td></tr>
</table></td><td></td></tr>
<tr><td>7A</td><td>STATUS_VOUT</td><td>Returns one byte of information with the status of the module's output voltage related faults
<table>
<tr><th>Format</th><th colspan="8">Unsigned Binary</th></tr>
<tr><td>Bit Position</td><td>7</td><td>6</td><td>5</td><td>4</td><td>3</td><td>2</td><td>1</td><td>0</td></tr>
<tr><td>Access</td><td>r</td><td>r</td><td>r</td><td>r</td><td>r</td><td>r</td><td>r</td><td>r</td></tr>
<tr><td>Flag</td><td>VOUT_OV</td><td>X</td><td>X</td><td>VOUT_UV</td><td>X</td><td>X</td><td>X</td><td>X</td></tr>
<tr><td>Default Value</td><td>0</td><td>0</td><td>0</td><td>0</td><td>0</td><td>0</td><td>0</td><td>0</td></tr>
</table></td><td></td></tr>
<tr><td>7B</td><td>STATUS_IOUT</td><td>Returns one byte of information with the status of the module's output current related faults
<table>
<tr><th>Format</th><th colspan="8">Unsigned Binary</th></tr>
<tr><td>Bit Position</td><td>7</td><td>6</td><td>5</td><td>4</td><td>3</td><td>2</td><td>1</td><td>0</td></tr>
<tr><td>Access</td><td>r</td><td>r</td><td>r</td><td>r</td><td>r</td><td>r</td><td>r</td><td>r</td></tr>
<tr><td>Flag</td><td>IOUT_OC Fault</td><td>X</td><td>IOUT OC Warning</td><td>X</td><td>X</td><td>X</td><td>X</td><td>X</td></tr>
<tr><td>Default Value</td><td>0</td><td>0</td><td>0</td><td>0</td><td>0</td><td>0</td><td>0</td><td>0</td></tr>
</table></td><td></td></tr>
</table>

©2017 General Electric Company. All rights reserved.

<table>
<tr><th>Hex Code</th><th>Command</th><th>Brief Description</th><th>Non-Volatile Memory Storage</th></tr>
<tr><td>7D</td><td>STATUS_TEMPERATURE</td><td>Returns one byte of information with the status of the module's temperature related faults
<table>
<tr><th>Format</th><th colspan="8">Unsigned Binary</th></tr>
<tr><td>Bit Position</td><td>7</td><td>6</td><td>5</td><td>4</td><td>3</td><td>2</td><td>1</td><td>0</td></tr>
<tr><td>Access</td><td>r</td><td>r</td><td>r</td><td>r</td><td>r</td><td>r</td><td>r</td><td>r</td></tr>
<tr><td>Flag</td><td>OT_FAULT</td><td>OT_WARN</td><td>X</td><td>X</td><td>X</td><td>X</td><td>X</td><td>X</td></tr>
<tr><td>Default Value</td><td>0</td><td>0</td><td>0</td><td>0</td><td>0</td><td>0</td><td>0</td><td>0</td></tr>
</table></td><td></td></tr>
<tr><td>7E</td><td>STATUS_CML</td><td>Returns one byte of information with the status of the module's communication related faults
<table>
<tr><th>Format</th><th colspan="8">Unsigned Binary</th></tr>
<tr><td>Bit Position</td><td>7</td><td>6</td><td>5</td><td>4</td><td>3</td><td>2</td><td>1</td><td>0</td></tr>
<tr><td>Access</td><td>r</td><td>r</td><td>r</td><td>r</td><td>r</td><td>r</td><td>r</td><td>r</td></tr>
<tr><td>Flag</td><td>Invalid Command</td><td>Invalid Data</td><td>PEC Fail</td><td>Memory fault detected</td><td>X</td><td>X</td><td>Other Comm Fault</td><td>X</td></tr>
<tr><td>Default Value</td><td>0</td><td>0</td><td>0</td><td>0</td><td>0</td><td>0</td><td>0</td><td>0</td></tr>
</table></td><td></td></tr>
<tr><td>80</td><td>STATUS_MFR_SPECIFIC</td><td>Returns one byte of information with the status of the module specific faults or warning
<table>
<tr><th>Format</th><th colspan="8">Unsigned Binary</th></tr>
<tr><td>Bit Position</td><td>7</td><td>6</td><td>5</td><td>4</td><td>3</td><td>2</td><td>1</td><td>0</td></tr>
<tr><td>Access</td><td>r</td><td>r</td><td>r</td><td>r</td><td>r</td><td>r</td><td>r</td><td>R</td></tr>
<tr><td>Flag</td><td>OTFI</td><td>x</td><td>X</td><td>IVADDR</td><td>X</td><td>X</td><td>X</td><td>TWOPH_EN</td></tr>
<tr><td>Default Value</td><td>0</td><td>0</td><td>0</td><td>0</td><td>0</td><td>0</td><td>0</td><td>0</td></tr>
</table>
OTFI – Internal Temperature above Thermal Shutdown threshold
IVADDR – PMBUs address is not valid
TWOPH_EN – Module is in 2 phase mode</td><td></td></tr>
<tr><td>8B</td><td>READ_VOUT</td><td>Returns the value of the output voltage of the module. Exponent is fixed at -9.
<table>
<tr><th>Format</th><th colspan="8">Linear, two's complement binary</th></tr>
<tr><td>Bit Position</td><td>7</td><td>6</td><td>5</td><td>4</td><td>3</td><td>2</td><td>1</td><td>0</td></tr>
<tr><td>Access</td><td>r</td><td>r</td><td>r</td><td>r</td><td>r</td><td>r</td><td>r</td><td>r</td></tr>
<tr><td>Function</td><td colspan="8">Mantissa</td></tr>
<tr><td>Default Value</td><td>0</td><td>0</td><td>0</td><td>0</td><td>0</td><td>0</td><td>0</td><td>0</td></tr>
<tr><td>Bit Position</td><td>7</td><td>6</td><td>5</td><td>4</td><td>3</td><td>2</td><td>1</td><td>0</td></tr>
<tr><td>Access</td><td>r</td><td>r</td><td>r</td><td>r</td><td>r</td><td>r</td><td>r</td><td>r</td></tr>
<tr><td>Function</td><td colspan="8">Mantissa</td></tr>
<tr><td>Default Value</td><td>0</td><td>0</td><td>0</td><td>0</td><td>0</td><td>0</td><td>0</td><td>0</td></tr>
</table></td><td></td></tr>
<tr><td>8C</td><td>READ_IOUT</td><td>Returns the value of the output current of the module
<table>
<tr><th>Format</th><th colspan="8">Linear, two's complement binary</th></tr>
<tr><td>Bit Position</td><td>7</td><td>6</td><td>5</td><td>4</td><td>3</td><td>2</td><td>1</td><td>0</td></tr>
<tr><td>Access</td><td>r</td><td>r</td><td>r</td><td>r</td><td>R</td><td>r</td><td>r</td><td>r</td></tr>
<tr><td>Function</td><td colspan="5">Exponent</td><td colspan="3">Mantissa</td></tr>
<tr><td>Default Value</td><td>1</td><td>1</td><td>1</td><td>0</td><td>0</td><td>V</td><td>V</td><td>V</td></tr>
<tr><td>Bit Position</td><td>7</td><td>6</td><td>5</td><td>4</td><td>3</td><td>2</td><td>1</td><td>0</td></tr>
<tr><td>Access</td><td>r</td><td>r</td><td>r</td><td>r</td><td>r</td><td>r</td><td>r</td><td>r</td></tr>
<tr><td>Function</td><td colspan="8">Mantissa</td></tr>
<tr><td>Default Value</td><td>V</td><td>V</td><td>V</td><td>V</td><td>V</td><td>V</td><td>V</td><td>0</td></tr>
</table>
V - Variable</td><td></td></tr>
</table>

©2017 General Electric Company. All rights reserved.

Table 6 (Continued)

<table>
<tr><th>Hex Code</th><th>Command</th><th>Brief Description</th><th>Non-Volatile Memory Storage</th></tr>
<tr><td>8E</td><td>READ_TEMPERATURE_2</td><td>Returns the value of the external temperature in degree Celsius
<table>
<tr><th>Format</th><th colspan="8">Linear, two's complement binary</th></tr>
<tr><td>Bit Position</td><td>7</td><td>6</td><td>5</td><td>4</td><td>3</td><td>2</td><td>1</td><td>0</td></tr>
<tr><td>Access</td><td>r</td><td>r</td><td>r</td><td>r</td><td>R</td><td>r</td><td>r</td><td>r</td></tr>
<tr><td>Function</td><td colspan="5">Exponent</td><td colspan="3">Mantissa</td></tr>
<tr><td>Default Value</td><td>0</td><td>0</td><td>0</td><td>0</td><td>0</td><td>V</td><td>V</td><td>V</td></tr>
<tr><td>Bit Position</td><td>7</td><td>6</td><td>5</td><td>4</td><td>3</td><td>2</td><td>1</td><td>0</td></tr>
<tr><td>Access</td><td>r</td><td>r</td><td>r</td><td>r</td><td>r</td><td>r</td><td>r</td><td>r</td></tr>
<tr><td>Function</td><td colspan="8">Mantissa</td></tr>
<tr><td>Default Value</td><td>V</td><td>V</td><td>V</td><td>V</td><td>V</td><td>V</td><td>V</td><td>0</td></tr>
</table>
V - Variable</td><td></td></tr>
<tr><td>98</td><td>PMBUS_REVISION</td><td>Returns one byte indicating the module is compliant to PMBus Spec. 1.1 (read only)
<table>
<tr><th>Format</th><th colspan="8">Unsigned Binary</th></tr>
<tr><td>Bit Position</td><td>7</td><td>6</td><td>5</td><td>4</td><td>3</td><td>2</td><td>1</td><td>0</td></tr>
<tr><td>Access</td><td>r</td><td>r</td><td>r</td><td>r</td><td>r</td><td>r</td><td>r</td><td>r</td></tr>
<tr><td>Default Value</td><td>0</td><td>0</td><td>0</td><td>1</td><td>0</td><td>0</td><td>0</td><td>1</td></tr>
</table></td><td></td></tr>
<tr><td>D0</td><td>MFR_SPECIFIC_00</td><td>Returns module name information
<table>
<tr><th>Format</th><th colspan="8">Unsigned Binary</th></tr>
<tr><td>Bit Position</td><td>7</td><td>6</td><td>5</td><td>4</td><td>3</td><td>2</td><td>1</td><td>0</td></tr>
<tr><td>Access</td><td>r</td><td>r</td><td>r</td><td>r</td><td>r</td><td>r</td><td>r</td><td>r</td></tr>
<tr><td>Function</td><td colspan="8">Reserved</td></tr>
<tr><td>Default Value</td><td>0</td><td>0</td><td>0</td><td>0</td><td>0</td><td>0</td><td>0</td><td>0</td></tr>
<tr><td>Bit Position</td><td>7</td><td>6</td><td>5</td><td>4</td><td>3</td><td>2</td><td>1</td><td>0</td></tr>
<tr><td>Access</td><td>r</td><td>r</td><td>r</td><td>r</td><td>r</td><td>r</td><td>r</td><td>r</td></tr>
<tr><td>Function</td><td colspan="6">Module Name</td><td colspan="2">Reserved</td></tr>
<tr><td>Default Value</td><td>0</td><td>1</td><td>0</td><td>0</td><td>0</td><td>1</td><td>1</td><td>0</td></tr>
</table></td><td>YES</td></tr>
<tr><td>D4</td><td>VREF_TRIM</td><td>Applies a fixed offset to the reference voltage. Max trim range is -20% to +10% in 2mV steps. Permissible values range between -120mV and +60mV. The offset is calculated as VREF_TRIMx2^{-9}. Exponent fixed at -9(dec)
<table>
<tr><th>Format</th><th colspan="8">Linear, two's complement binary</th></tr>
<tr><td>Bit Position</td><td>7</td><td>6</td><td>5</td><td>4</td><td>3</td><td>2</td><td>1</td><td>0</td></tr>
<tr><td>Access</td><td>r/w</td><td>r</td><td>r</td><td>r</td><td>r</td><td>r</td><td>r</td><td>r</td></tr>
<tr><td>Function</td><td colspan="8">Mantissa</td></tr>
<tr><td>Default Value</td><td>V</td><td>V</td><td>V</td><td>V</td><td>V</td><td>V</td><td>V</td><td>V</td></tr>
<tr><td>Bit Position</td><td>7</td><td>6</td><td>5</td><td>4</td><td>3</td><td>2</td><td>1</td><td>0</td></tr>
<tr><td>Access</td><td>r</td><td>r</td><td>r/w</td><td>r/w</td><td>r/w</td><td>r/w</td><td>r/w</td><td>r/w</td></tr>
<tr><td>Function</td><td colspan="8">Mantissa</td></tr>
<tr><td>Default Value</td><td>V</td><td>V</td><td>V</td><td>V</td><td>V</td><td>V</td><td>V</td><td>V</td></tr>
</table></td><td>YES</td></tr>
<tr><td>D5</td><td>STEP_VREF_MARGIN_HIGH</td><td>Applies a fixed offset to the reference voltage. Adjustment is 0% to +10% in 2mV steps. Permissible values range between 0mV and +60mV. The offset is calculated as (STEP_VREF_MARGIN_HIGH + VREF_TRIM)x2^{-9}. Exponent fixed at -9(dec). Net output voltage includes VREF_TRIM adjustment and ranges from -30% to 10%
<table>
<tr><th>Format</th><th colspan="8">Linear, two's complement binary</th></tr>
<tr><td>Bit Position</td><td>7</td><td>6</td><td>5</td><td>4</td><td>3</td><td>2</td><td>1</td><td>0</td></tr>
<tr><td>Access</td><td>r</td><td>r</td><td>r</td><td>r</td><td>r</td><td>r</td><td>r</td><td>r</td></tr>
<tr><td>Function</td><td colspan="8">Mantissa</td></tr>
<tr><td>Default Value</td><td>V</td><td>V</td><td>V</td><td>V</td><td>V</td><td>V</td><td>V</td><td>V</td></tr>
<tr><td>Bit Position</td><td>7</td><td>6</td><td>5</td><td>4</td><td>3</td><td>2</td><td>1</td><td>0</td></tr>
<tr><td>Access</td><td>r</td><td>r</td><td>r</td><td>r/w</td><td>r/w</td><td>r/w</td><td>r/w</td><td>r/w</td></tr>
<tr><td>Function</td><td colspan="8">Mantissa</td></tr>
<tr><td>Default Value</td><td>V</td><td>V</td><td>V</td><td>V</td><td>V</td><td>V</td><td>V</td><td>V</td></tr>
</table></td><td>YES</td></tr>
</table>

©2017 General Electric Company. All rights reserved.

Table 6 (Continued)

<table>
<tr><th>Hex Code</th><th>Command</th><th>Brief Description</th><th>Non-Volatile Memory Storage</th></tr>
<tr><td>D6</td><td>STEP_VREF_MARGIN_LOW</td><td>Applies a fixed negative offset to the reference voltage. Adjustment is -20% to 0% in 2mV steps. Permissible values range between -120mV and 0mV) The offset is calculated as (STEP_VREF_MARGIN_LOW + VREF_TRIM)x2^{-9}.Exponent fixed at -9(dec). Net output voltage includes VREF_TRIM adjustment and ranges from -30% to 10%
<table>
<tr><th>Format</th><th colspan="8">Linear, two's complement binary</th></tr>
<tr><td>Bit Position</td><td>7</td><td>6</td><td>5</td><td>4</td><td>3</td><td>2</td><td>1</td><td>0</td></tr>
<tr><td>Access</td><td>r</td><td>r</td><td>r</td><td>r</td><td>r</td><td>r</td><td>r</td><td>r</td></tr>
<tr><td>Function</td><td colspan="8">Mantissa</td></tr>
<tr><td>Default Value</td><td>V</td><td>V</td><td>V</td><td>V</td><td>V</td><td>V</td><td>V</td><td>V</td></tr>
<tr><td>Bit Position</td><td>7</td><td>6</td><td>5</td><td>4</td><td>3</td><td>2</td><td>1</td><td>0</td></tr>
<tr><td>Access</td><td>r</td><td>r</td><td>r/w</td><td>r/w</td><td>r/w</td><td>r/w</td><td>r/w</td><td>r/w</td></tr>
<tr><td>Function</td><td colspan="8">Mantissa</td></tr>
<tr><td>Default Value</td><td>V</td><td>V</td><td>V</td><td>V</td><td>V</td><td>V</td><td>V</td><td>V</td></tr>
</table></td><td>YES</td></tr>
<tr><td>D7</td><td>PCT_VOUT_FAULT_PG_LIMIT</td><td>Single command to set PGOOD, VOUT_UNDER_VOLTAGE(UV) and VOUT_OVER_VOLTAGE(OV) limits as percentage of nominal
<table>
<tr><th>Format</th><th colspan="8">Unsigned Binary</th></tr>
<tr><td>Bit Position</td><td>7</td><td>6</td><td>5</td><td>4</td><td>3</td><td>2</td><td>1</td><td>0</td></tr>
<tr><td>Access</td><td>r</td><td>r</td><td>r</td><td>r</td><td>r</td><td>r</td><td>r/w</td><td>r/w</td></tr>
<tr><td>Function</td><td>X</td><td>X</td><td>X</td><td>X</td><td>X</td><td>X</td><td>PCT_ MSB</td><td>PCT_ LSB</td></tr>
<tr><td>Default Value</td><td>0</td><td>X</td><td>X</td><td>X</td><td>X</td><td>X</td><td>X</td><td>0</td></tr>
</table>
PAGE Command Truth Table
<table>
<tr><th>PCT_MSB</th><th>PCT_LSB</th><th>UV (%)</th><th>PGL LOW (%)</th><th>PGL HIGH (%)</th><th>PGH HIGH (%)</th><th>PGH LOW (%)</th><th>OV (%)</th></tr>
<tr><td>0</td><td>0</td><td>-16.67</td><td>-12.5</td><td>-8.33</td><td>12.5</td><td>8.33</td><td>16.67</td></tr>
<tr><td>0</td><td>1</td><td>-12.5</td><td>-8.33</td><td>-4.17</td><td>8.33</td><td>4.17</td><td>12.5</td></tr>
<tr><td>1</td><td>0</td><td>-29.17</td><td>-20.83</td><td>-16.67</td><td>8.33</td><td>4.17</td><td>12.5</td></tr>
<tr><td>1</td><td>1</td><td>-41.67</td><td>-37.5</td><td>-33.33</td><td>8.33</td><td>4.17</td><td>12.5</td></tr>
</table></td><td></td></tr>
<tr><td>D8</td><td>SEQUENCE_TON_TOFF_DELAY</td><td>Used to set delay to turn-on or turn-off modules as a ratio of TON_RISE. Values can range from 0 to 7 and are a multiple of TON_RISE TIME
<table>
<tr><th>Format</th><th colspan="8">Unsigned Binary</th></tr>
<tr><td>Bit Position</td><td>7</td><td>6</td><td>5</td><td>4</td><td>3</td><td>2</td><td>1</td><td>0</td></tr>
<tr><td>Access</td><td>r/w</td><td>r/w</td><td>r/w</td><td>r</td><td>r/w</td><td>r/w</td><td>r/w</td><td>r</td></tr>
<tr><td>Function</td><td colspan="3">TON_DELAY</td><td></td><td colspan="3">TOFF_DELAY</td><td></td></tr>
<tr><td>Default Value</td><td>0</td><td>0</td><td>0</td><td>0</td><td>0</td><td>0</td><td>0</td><td>0</td></tr>
</table></td><td></td></tr>
</table>

Digital Power Insight (DPI)

GE offers a software tool that set helps users evaluate and simulate the PMBus performance of the PJT014 modules without the need to write software.

The software can be downloaded for free at http://go.ge-energy.com/DigitalPowerInsight.html. A GE USB to I2C adapter and associated cable set are required for proper functioning of the software suite. For first time users, the GE DPI Evaluation Kit can be purchased from leading distributors at a nominal price and can be used across the entire range of GE Digital POL Module.

©2017 General Electric Company. All rights reserved.

Thermal Considerations

Power modules operate in a variety of thermal environments; however, sufficient cooling should always be provided to help ensure reliable operation.

Considerations include ambient temperature, airflow, module power dissipation, and the need for increased reliability. A reduction in the operating temperature of the module will result in an increase in reliability. The thermal data presented here is based on physical measurements taken in a wind tunnel. The test set-up is shown in Figure 48. The preferred airflow direction for the module is in Figure 49.

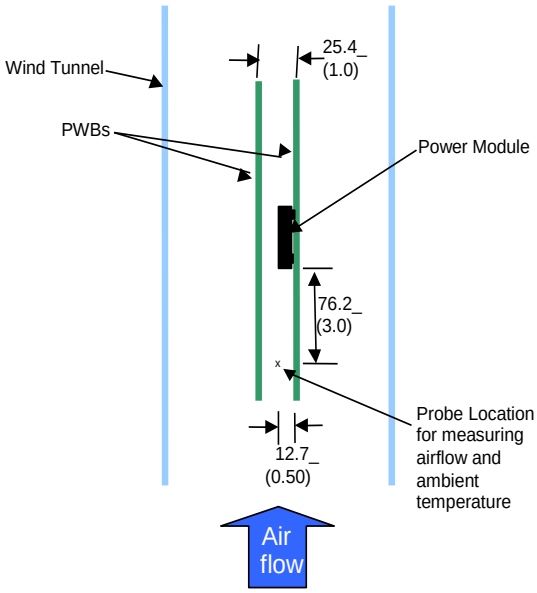

Figure 48. Thermal Test Setup.

The thermal reference points, T_{ref} used in the specifications are also shown in Figure 49. For reliable operation the temperatures at these points should not exceed 120°C. The output power of the module should not exceed the rated power of the module (Vo,set x Io,max).

Please refer to the Application Note "Thermal Characterization Process For Open-Frame Board-Mounted Power Modules" for a detailed discussion of thermal aspects including maximum device temperatures.

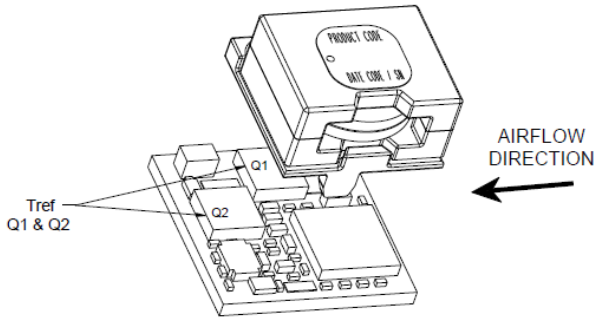

Figure 49. Preferred airflow direction and location of hot-spot of the module (Tref).

©2017 General Electric Company. All rights reserved.

Shock and Vibration

The ruggedized (-D version) of the modules are designed to withstand elevated levels of shock and vibration to be able to operate in harsh environments. The ruggedized modules have been successfully tested to the following conditions:

Non operating random vibration:
Random vibration tests conducted at 25C, 10 to 2000Hz, for 30 minutes each level, starting from 30Grms (Z axis) and up to 50Grms (Z axis). The units were then subjected to two more tests of 50Grms at 30 minutes each for a total of 90 minutes.

Operating shock to 40G per Mil Std. 810G, Method 516.4 Procedure I:
The modules were tested in opposing directions along each of three orthogonal axes, with waveform and amplitude of the shock impulse characteristics as follows:

All shocks were half sine pulses, 11 milliseconds (ms) in duration in all 3 axes.

Units were tested to the Functional Shock Test of MIL-STD-810, Method 516.4, Procedure I - Figure 516.4-4. A shock magnitude of 40G was utilized. The operational units were subjected to three shocks in each direction along three axes for a total of eighteen shocks.

Operating vibration per Mil Std 810G, Method 514.5 Procedure I:

The ruggedized (-D version) modules are designed and tested to vibration levels as outlined in MIL-STD-810G, Method 514.5, and Procedure 1, using the Power Spectral Density (PSD) profiles as shown in Table 7 and Table 8 for all axes. Full compliance with performance specifications was required during the performance test. No damage was allowed to the module and full compliance to performance specifications was required when the endurance environment was removed. The module was tested per MIL-STD-810, Method 514.5, Procedure I, for functional (performance) and endurance random vibration using the performance and endurance levels shown in Table 7 and Table 8 for all axes. The performance test has been split, with one half accomplished before the endurance test and one half after the endurance test (in each axis). The duration of the performance test was at least 16 minutes total per axis and at least 120 minutes total per axis for the endurance test. The endurance test period was 2 hours minimum per axis.

Table 7: Performance Vibration Qualification - All Axes

Frequency (Hz)	PSD Level (G2/Hz)	Frequency (Hz)	PSD Level (G2/Hz)	Frequency (Hz)	PSD Level (G2/Hz)
10	1.14E-03	170	2.54E-03	690	1.03E-03
30	5.96E-03	230	3.70E-03	800	7.29E-03
40	9.53E-04	290	7.99E-04	890	1.00E-03
50	2.08E-03	340	1.12E-02	1070	2.67E-03
90	2.08E-03	370	1.12E-02	1240	1.08E-03
110	7.05E-04	430	8.84E-04	1550	2.54E-03
130	5.00E-03	490	1.54E-03	1780	2.88E-03
140	8.20E-04	560	5.62E-04	2000	5.62E-04

Table 8: Endurance Vibration Qualification - All Axes

Frequency (Hz)	PSD Level (G2/Hz)	Frequency (Hz)	PSD Level (G2/Hz)	Frequency (Hz)	PSD Level (G2/Hz)
10	0.00803	170	0.01795	690	0.00727
30	0.04216	230	0.02616	800	0.05155
40	0.00674	290	0.00565	890	0.00709
50	0.01468	340	0.07901	1070	0.01887
90	0.01468	370	0.07901	1240	0.00764
110	0.00498	430	0.00625	1550	0.01795
130	0.03536	490	0.01086	1780	0.02035
140	0.0058	560	0.00398	2000	0.00398

©2017 General Electric Company. All rights reserved.

14A Digital PicoDLynxII™: Non-Isolated DC-DC Power Modules

4.5Vdc –14.4Vdc input; 0.51Vdc to 5.5Vdc output; 14A Output Current

Example Application Circuit

Requirements:

Vin:	**12V**
Vout:	**1.8V**
Iout:	**10.5A max., worst case load transient is from 7A to 10.5A**
ΔVout:	**1.5% of Vout (27mV) for worst case load transient**
Vin, ripple	**1.5% of Vin (180mV, p-p)**

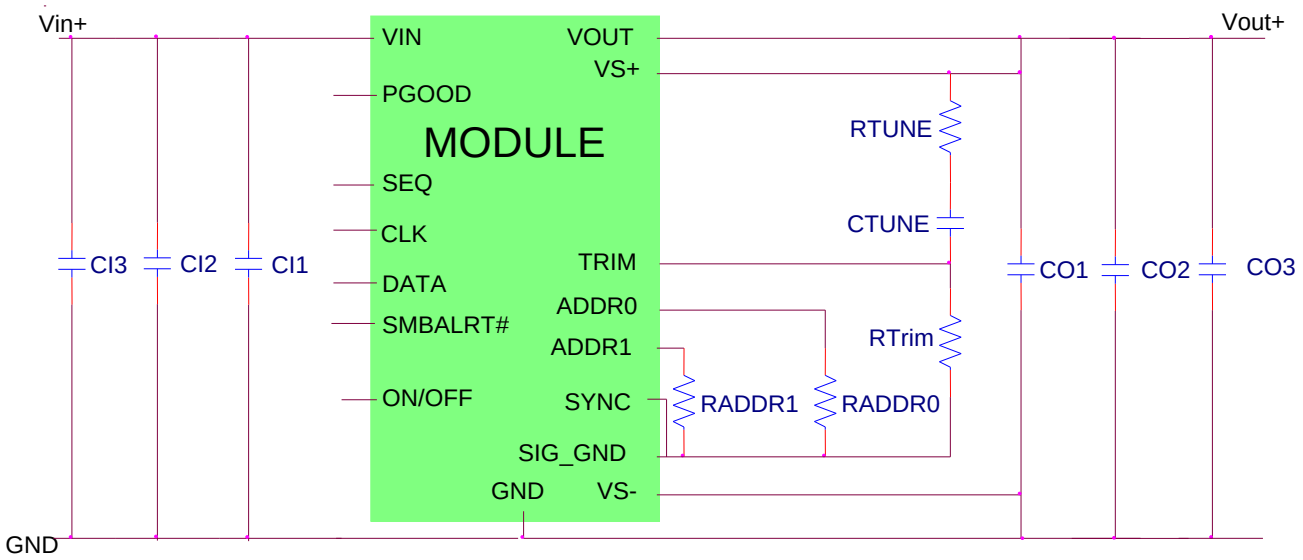

CI1	Decoupling caps - 1x0.047µF/16V ceramic(e.g. Murata LLL185R71C473MA01) + 1x0.1uF/16V 0402 ceramic
CI2	4x22µF/16V ceramic capacitor (e.g. Murata GRM32ER61C226KE20)
CI3	47µF/16V bulk electrolytic
CO1	Decoupling caps - 1x0.047µF/16V ceramic (e.g. Murata LLL185R71C473MA01) + 1x0.1uF/16V 0402 ceramic
CO2	4 x 47uF/6.3V 1210 ceramic capacitors
CO3	1 x 330uF/6V POSCAP
CTune	1000 pF ceramic capacitor (can be 1206, 0805 or 0603 size)
RTune	300Ω SMT resistor (can be 1206, 0805 or 0603 size)
RTrim	10kΩ SMT resistor (can be 1206, 0805 or 0603 size, recommended tolerance of 0.1%)

Note: The DATA, CLK and SMBALRT pins do not have any pull-up resistors inside the module. Typically, the SMBus master controller will have the pull-up resistors as well as provide the driving source for these signals.

©2017 General Electric Company. All rights reserved.

14A Digital PicoDLynxII™: Non-Isolated DC-DC Power Modules

4.5Vdc –14.4Vdc input; 0.51Vdc to 5.5Vdc output; 14A Output Current

Mechanical Outline

Dimensions are in millimeters and (inches).

Tolerances: x.x mm ± 0.5 mm (x.xx in. ± 0.02 in.) [unless otherwise indicated]

x.xx mm ± 0.25 mm (x.xxx in ± 0.010 in.)

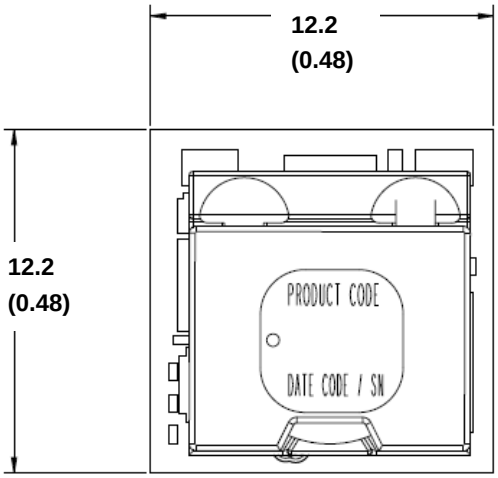

TOP VIEW

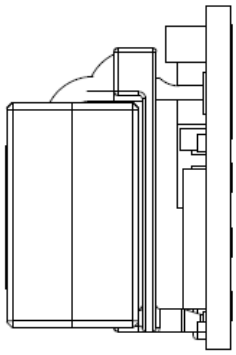

SIDE VIEW

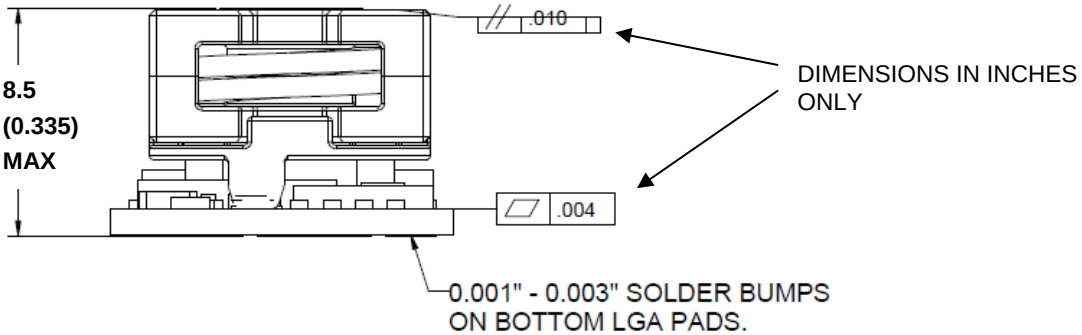

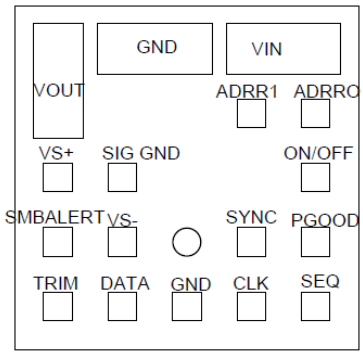

BOTTOM VIEW

PIN	FUNCTION	PIN	FUNCTION
1	ON/OFF	10	PGOOD
2	VIN	11	SYNC[1]
3	GND	12	VS-
4	VOUT	13	SIG_GND
5	VS+ (SENSE)	14	SMBALERT#
6	TRIM	15	DATA
7	GND	16	ADDR0
8	CLK	17	ADDR1
9	SEQ		

[1] If unused, connect directly to SIG_GND

©2017 General Electric Company. All rights reserved.

14A Digital PicoDLynxII™: Non-Isolated DC-DC Power Modules

4.5Vdc –14.4Vdc input; 0.51Vdc to 5.5Vdc output; 14A Output Current

Recommended Pad Layout

Dimensions are in millimeters and (inches).

Tolerances: x.x mm ± 0.5 mm (x.xx in. ± 0.02 in.) [unless otherwise indicated]

x.xx mm ± 0.25 mm (x.xxx in ± 0.010 in.)

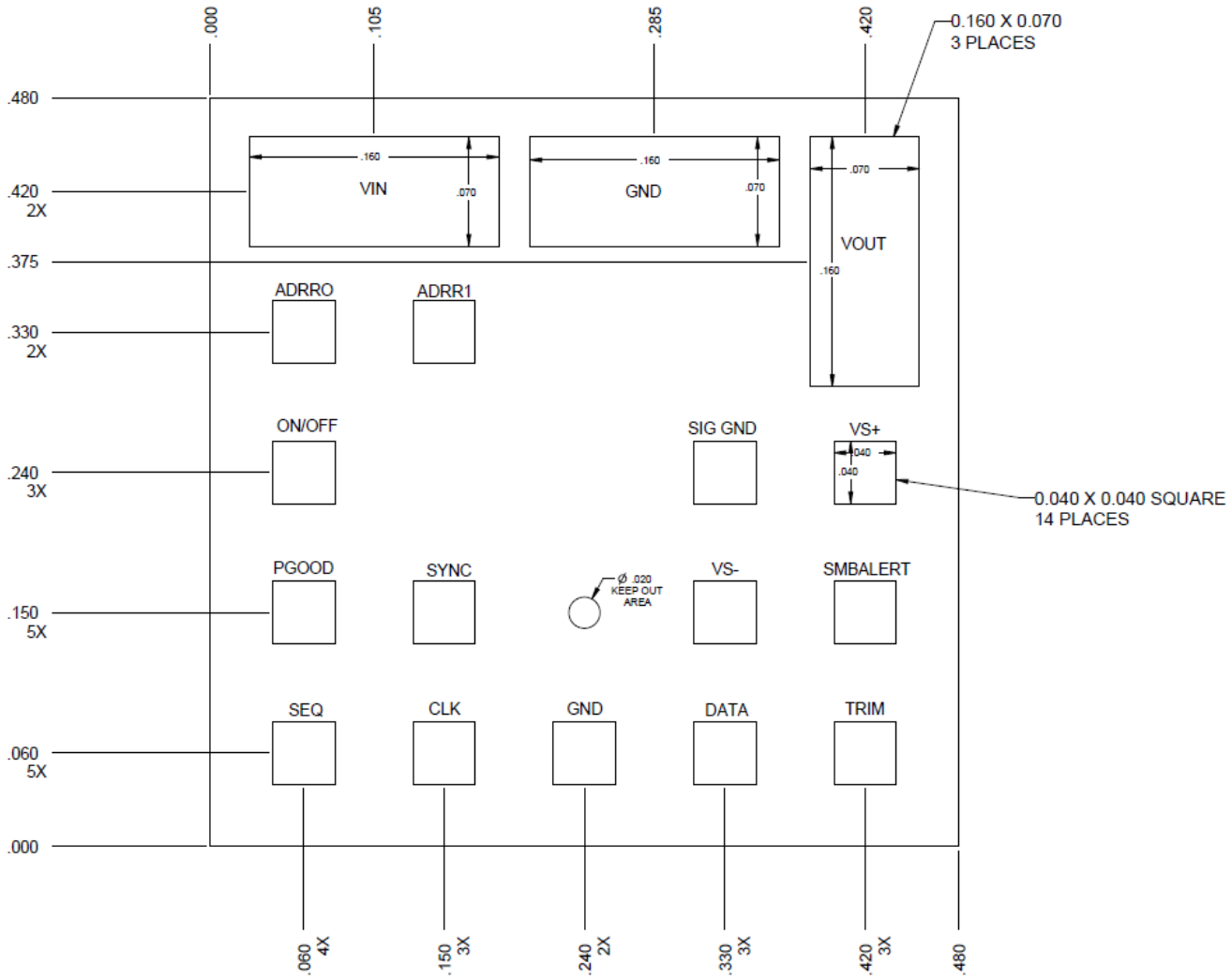

PIN	FUNCTION	PIN	FUNCTION
1	ON/OFF	10	PGOOD
2	VIN	11	SYNC[2]
3	GND	12	VS-
4	VOUT	13	SIG_GND
5	VS+ (SENSE)	14	SMBALERT#
6	TRIM	15	DATA
7	GND	16	ADDR0
8	CLK	17	ADDR1
9	SEQ		

[2] If unused, connect to Sig_GND.

©2017 General Electric Company. All rights reserved.

14A Digital PicoDLynxII™: Non-Isolated DC-DC Power Modules

4.5Vdc –14.4Vdc input; 0.51Vdc to 5.5Vdc output; 14A Output Current

Packaging Details

The 12V Digital PicoDLynxII™ 14A modules are supplied in tape & reel as standard. Modules are shipped in quantities of 200 modules per reel.

All Dimensions are in millimeters and (in inches).

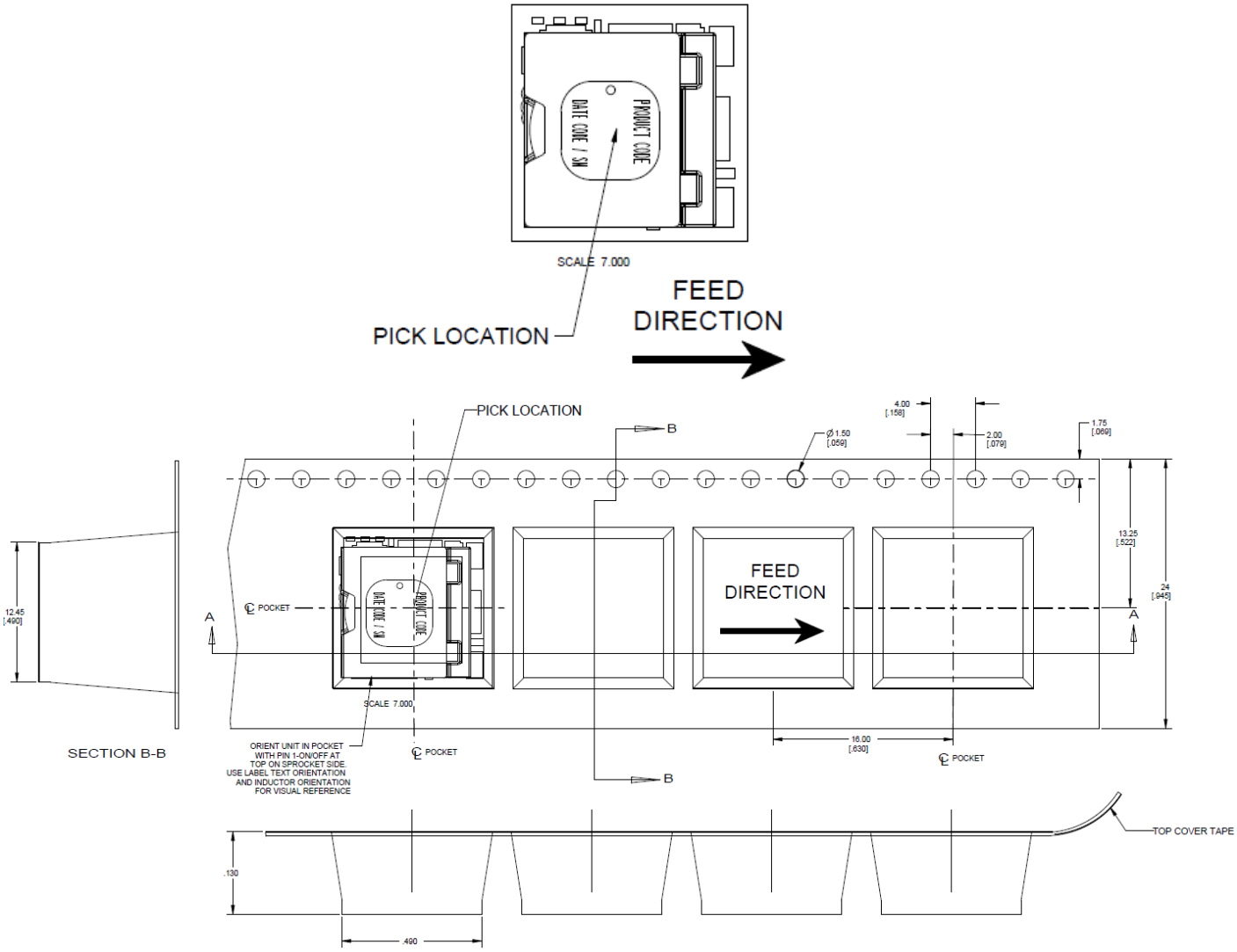

Reel Dimensions:

Outside Dimensions:	330.2 mm (13.00)
Inside Dimensions:	177.8 mm (7.00")
Tape Width:	24.00 mm (0.945")

©2017 General Electric Company. All rights reserved.

Surface Mount Information

Pick and Place

The 14A Digital PicoDLynxII™ modules use an open frame construction and are designed for a fully automated assembly process. The modules are fitted with a label designed to provide a large surface area for pick and place operations. The label meets all the requirements for surface mount processing, as well as safety standards, and is able to withstand reflow temperatures of up to 300°C. The label also carries product information such as product code, serial number and the location of manufacture.

Nozzle Recommendations

The module weight has been kept to a minimum by using open frame construction. Variables such as nozzle size, tip style, vacuum pressure and placement speed should be considered to optimize this process. The minimum recommended inside nozzle diameter for reliable operation is 3mm. The maximum nozzle outer diameter, which will safely fit within the allowable component spacing, is 7 mm.

Bottom Side / First Side Assembly

This module is not recommended for assembly on the bottom side of a customer board. If such an assembly is attempted, components may fall off the module during the second reflow process.

Lead Free Soldering

The modules are lead-free (Pb-free) and RoHS compliant and fully compatible in a Pb-free soldering process. Failure to observe the instructions below may result in the failure of or cause damage to the modules and can adversely affect long-term reliability.

Pb-free Reflow Profile

Power Systems will comply with J-STD-020 Rev. C (Moisture/Reflow Sensitivity Classification for Nonhermetic Solid State Surface Mount Devices) for both Pb-free solder profiles and MSL classification procedures. This standard provides a recommended forced-air-convection reflow profile based on the volume and thickness of the package (table 4-2). The suggested Pb-free solder paste is Sn/Ag/Cu (SAC). For questions regarding Land grid array(LGA) soldering, solder volume; please contact GE for special manufacturing process instructions. The recommended linear reflow profile using Sn/Ag/Cu solder is shown in Fig. 44. Soldering outside of the recommended profile requires testing to verify results and performance.

MSL Rating

The 14A Digital PicoDLynxII™ modules have a MSL rating of 2A.

Storage and Handling

The recommended storage environment and handling procedures for moisture-sensitive surface mount packages is detailed in J-STD-033 Rev. A (Handling, Packing, Shipping and Use of Moisture/Reflow Sensitive Surface Mount Devices). Moisture barrier bags (MBB) with desiccant are required for MSL ratings of 2 or greater. These sealed packages should not be broken until time of use. Once the original package is broken, the floor life of the product at conditions of ≤ 30°C and 60% relative humidity varies according to the MSL rating (see J-STD-033A). The shelf life for dry packed SMT packages will be a minimum of 12 months from the bag seal date, when stored at the following conditions: < 40° C, < 90% relative humidity.

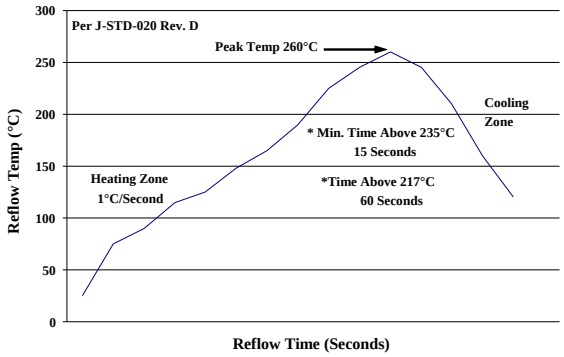

Figure 50. Recommended linear reflow profile using Sn/Ag/Cu solder.

Post Solder Cleaning and Drying Considerations

Post solder cleaning is usually the final circuit-board assembly process prior to electrical board testing. The result of inadequate cleaning and drying can affect both the reliability of a power module and the testability of the finished circuit-board assembly. For guidance on appropriate soldering, cleaning and drying procedures, refer to *Board Mounted Power Modules: Soldering and Cleaning* Application Note (AN04-001).

©2017 General Electric Company. All rights reserved.

14A Digital PicoDLynxII™: Non-Isolated DC-DC Power Modules

4.5Vdc –14.4Vdc input; 0.51Vdc to 5.5Vdc output; 14A Output Current

Ordering Information

Please contact your GE Sales Representative for pricing, availability and optional features.

Table 9. Device Codes

Device Code	Input Voltage Range	Output Voltage	Output Current	On/Off Logic	Sequencing	Comcodes
PJT014A0X3-SRZ	4.5 – 14.4Vdc	0.51 – 5.5Vdc	14A	Negative	Yes	150051524
PJT014A0X3-SRDZ	4.5 – 14.4Vdc	0.51 – 5.5Vdc	14A	Negative	Yes	150052348
PJT014A0X43-SRZ	4.5 – 14.4Vdc	0.51 – 5.5Vdc	14A	Positive	Yes	150051527
PJT014A0X43-SRDZ	4.5 – 14.4Vdc	0.51 – 5.5Vdc	14A	Positive	Yes	150052966

-Z refers to RoHS compliant parts

Table 10. Coding Scheme

Package Identifier	Family	Sequencing Option	Output current	Output voltage	On/Off logic	Remote Sense	Options		ROHS Compliance
P	**J**	**T**	**014A0**	**X**		**3**	**-SR**		**Z**
P=Pico U=Pico M=Mega G=Giga	J=DLynx II Digital K = DLynxII Analog.	T=with EZ Sequence X=without sequencing	14A	X = programmable output	4 = positive No entry = negative	3 = Remote Sense	S = Surface Mount R = Tape & Reel	D = 40G operating shock as per MIL Std 810G and 105°C operating ambient,	Z = ROHS6

GE Digital Non-Isolated DC-DC products use technology licensed from Power-One, protected by US patents: US20040246754, US2004090219A1, US2004093533A1, US2004123164A1, US2004123167A1, US2004178780A1, US2004179382A1, US20050200344, US20050223252, US2005289373A1, US20060061214, US2006015616A1, US20060174145, US20070226526, US20070234095, US20070240000, US20080052551, US20080072080, US20080186006, US6741099, US6788036, US6936999, US6949916, US7000125, US7049798, US7068021, US7080265, US7249267, US7266709, US7315156, US7372682, US7373527, US7394445, US7456617, US7459892, US7493504, US7526660.

Outside the US the Power-One licensed technology is protected by patents: AU3287379AA, AU3287437AA, AU3290643AA, AU3291357AA, CN10371856C, CN1045261OC, CN10458656C, CN10459360C, CN10465848C, CN11069332A, CN11124619A, CN11346682A, CN1685299A, CN1685459A, CN1685582A, CN1685583A, CN1698023A, CN1802619A, EP1561156A1, EP1561268A2, EP1576710A1, EP1576711A1, EP1604254A4, EP1604264A4, EP1714369A2, EP1745536A4, EP1769382A4, EP1899789A2, EP1984801A2, W004044718A1, W004045042A3, W004045042C1, W004062061 A1, W004062062A1, W004070780A3, W004084390A3, W004084391A3, W005079227A3, W005081771A3, W006019569A3, W02007001584A3, W02007094935A3

Contact Us

For more information, call us at

USA/Canada:

+1 888 546 3243, or +1 972 244 9288

Asia-Pacific:

+86.021.54279977*808

Europe, Middle-East and Africa:

+49.89.878067-280

imagination at work

www.gecriticalpower.com

GE Critical Power reserves the right to make changes to the product(s) or information contained herein without notice, and no liability is assumed as a result of their use or application. No rights under any patent accompany the sale of any such product(s) or information.

 ©2017 General Electric Company. All International rights reserved.

ООО «ЛайфЭлектроникс» “LifeElectronics” LLC

ИНН 7805602321 КПП 780501001 Р/С 40702810122510004610 ФАКБ "АБСОЛЮТ БАНК" (ЗАО) в г.Санкт-Петербурге К/С 30101810900000000703 БИК 044030703

Компания «Life Electronics» занимается поставками электронных компонентов импортного и отечественного производства от производителей и со складов крупных дистрибьюторов Европы, Америки и Азии.

С конца 2013 года компания активно расширяет линейку поставок компонентов по направлению коаксиальный кабель, кварцевые генераторы и конденсаторы (керамические, пленочные, электролитические), за счёт заключения дистрибьюторских договоров

Мы предлагаем:

- *Конкурентоспособные цены и скидки постоянным клиентам.*
- *Специальные условия для постоянных клиентов.*
- *Подбор аналогов.*
- *Поставку компонентов в любых объемах, удовлетворяющих вашим потребностям.*

- *Приемлемые сроки поставки, возможна ускоренная поставка.*
- *Доставку товара в любую точку России и стран СНГ.*
- *Комплексную поставку.*
- *Работу по проектам и поставку образцов.*
- *Формирование склада под заказчика.*

- *Сертификаты соответствия на поставляемую продукцию (по желанию клиента).*
- *Тестирование поставляемой продукции.*
- *Поставку компонентов, требующих военную и космическую приемку.*
- *Входной контроль качества.*
- *Наличие сертификата ISO.*

В составе нашей компании организован Конструкторский отдел, призванный помогать разработчикам, и инженерам.

Конструкторский отдел помогает осуществить:

- *Регистрацию проекта у производителя компонентов.*
- *Техническую поддержку проекта.*
- *Защиту от снятия компонента с производства.*
- *Оценку стоимости проекта по компонентам.*
- *Изготовление тестовой платы монтаж и пусконаладочные работы.*

Тел: +7 (812) 336 43 04 (многоканальный)
Email: org@lifeelectronics.ru

www.lifeelectronics.ru