MCP19116/7

Digitally Enhanced Power Analog Synchronous Low-Side PWM Controller with Improved 8k Word Core

Features

- Input Voltage: +4.5V to +42V
- Can be configured with multiple topologies including but not limited to:
  - Flyback
  - Ćuk
  - Boost
  - SEPIC (Single-Ended Primary-Inductor Converter)
- Capable of Quasi-Resonant or Fixed-Frequency Operation
- Low Quiescent Current: 5 mA Typical
- Low Sleep Current: 50 µA Typical
- Low-Side Gate Drivers:
  - +5V gate drive with 0.5A sink/source current
  - +10V gate drive with 1A sink/source current
- Peak Current Mode Control
- Differential Remote Output Sense
- Multiple Output Systems:
  - Master or Slave
- AEC-Q100 Qualified
- Configurable Parameters:
  - V_{REF}, Precision I_{OUT}/V_{OUT} Set Point (DAC)
  - ADC Reference Switch (V_{DD} or AV_{DD})
  - Input Undervoltage Lockout (UVLO)
  - Input Overvoltage Lockout (OVLO)
  - Detection and protection
  - Primary current leading edge blanking (0 ns, 50 ns, 100 ns and 200 ns)
  - Gate drive dead time (16 ns to 256 ns)
  - Fixed switching frequency range: 31.25 kHz to 2.0 MHz
  - Slope compensation
  - Quasi-Resonant configuration with built-in comparator and programmable offset voltage adjustment
  - Primary current offset adjustment
  - GPIO pin options
- Integrated Low-Side Differential Current-Sense Amplifier
- Better than 5% Current Regulation
- Thermal Shutdown

Microcontroller Features

- Precision 8 MHz Internal Oscillator Block:
  - Factory-calibrated to ±1%, typical
- Interrupt-Capable:
  - Firmware
  - Interrupt-on-change pins
- Only 35 Instructions to Learn
- 8192 Words On-Chip Program Memory
- High-Endurance Flash:
  - 100,000 write Flash endurance
  - Flash retention: > 40 years
- Watchdog Timer (WDT) with Independent Oscillator for Reliable Operation
- Programmable Code Protection
- In-Circuit Serial Programming™ (ICSP™) via Two Pins
- Eight I/O Pins and One Input-Only Pin:
  - Two open-drain pins
- Analog-to-Digital Converter (ADC):
  - 10-bit resolution
  - Five external channels
- Timer0: 8-bit Timer/Counter with 8-bit Prescaler
- Enhanced Timer1:
  - 16-bit timer with prescaler
  - Two selectable clock sources
- Timer2: 8-Bit Timer with Prescaler:
  - 8-bit period register
- I^2C Communication:
  - 7-bit address masking
  - Two dedicated address registers
- Addressable Universal Synchronous Receiver Transmitter (AUSART) Modes
  - Asynchronous (Full Duplex)
  - Synchronous - Master (Half Duplex)
  - Synchronous - Slave (Half Duplex)

© 2015-2018 Microchip Technology Inc.

Pin Diagram – 24-Pin QFN (MCP19116)

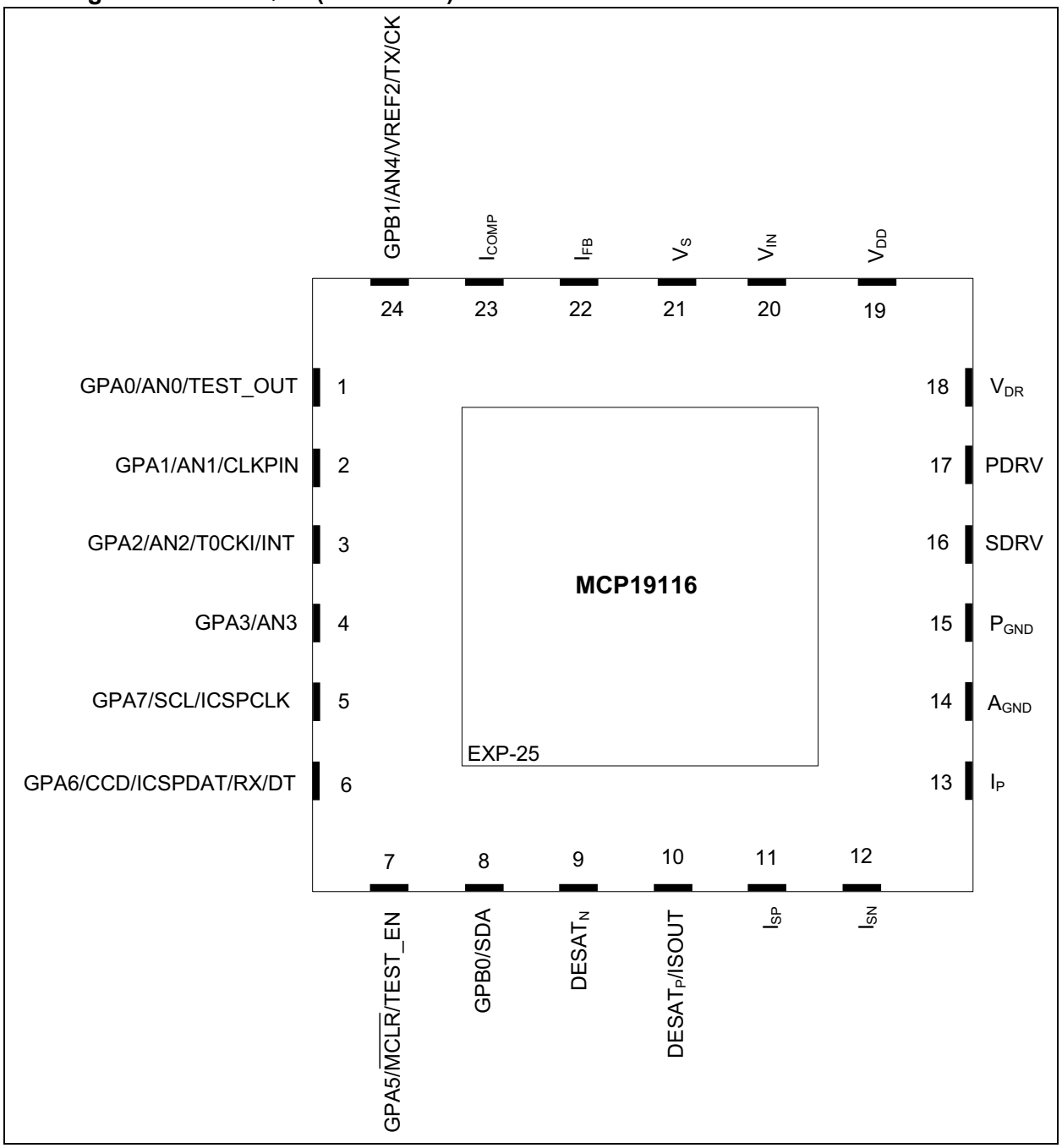

© 2015-2018 Microchip Technology Inc.

TABLE 1: 24-PIN QFN (MCP19116) SUMMARY

I/O	24-Pin QFN	ANSEL	A/D	Timers	MSSP/AUSART	Interrupt	Pull-Up	Basic	Additional
GPA0	1	Y	AN0	—	—	IOC	Y	—	Analog/Digital Debug Output (1)
GPA1	2	Y	AN1	—	—	IOC	Y	—	Sync Signal In/Out (2)
GPA2	3	Y	AN2	T0CKI	—	IOC INT	Y	—	—
GPA3	4	Y	AN3	—	—	IOC	Y	—	—
GPA5	7	N	—	—	—	IOC (3)	Y (4)	$\overline{MCLR}$	Test Enable Input
GPA6	6	N	—	—	RX/DT	IOC	Y	ICSPDAT	Dual Capture Input / Single Compare 1 Output
GPA7	5	N	—	—	SCL	IOC	N	ICSPCLK	—
GPB0	8	N	—	—	SDA	IOC	N	—	—
GPB1	24	Y	AN4	—	TX/CK	IOC	Y	—	V_{REF2} (5)
$DESAT_N$	9	N	—	—	—	—	—	—	DESAT Negative Input
$DESAT_P$/ I_{SOUT}	10	N	—	—	—	—	—	—	$DESAT_P$ Input or I_{SOUT} Output (6)
I_{SP}	11	N	—	—	—	—	Y	—	Current Sense Amplifier Positive Input
I_{SN}	12	N	—	—	—	—	—	—	Current Sense Amplifier Negative Input
I_P	13	N	—	—	—	—	—	—	Primary Input Current Sense
A_{GND}	14	N	—	—	—	—	—	A_{GND}	Small Signal Ground
P_{GND}	15	N	—	—	—	—	—	P_{GND}	Large Signal Ground
SDRV	16	N	—	—	—	—	—	—	Secondary LS Gate Drive Output
PDRV	17	N	—	—	—	—	—	—	Primary LS Gate Drive Output
V_{DR}	18	N	—	—	—	—	—	V_{DR}	Gate Drive Supply Voltage
V_{DD}	19	N	—	—	—	—	—	V_{DD}	V_{DD} Output
V_{IN}	20	N	—	—	—	—	—	V_{IN}	Input Supply Voltage
V_S	21	N	—	—	—	—	—	—	Output Voltage Sense
I_{FB}	22	N	—	—	—	—	—	—	Error Amplifier Feedback Input
I_{COMP}	23	N	—	—	—	—	—	—	Error Amplifier Output

Note 1: The Analog/Digital Debug Output is selected through the control of the ABECON register.

2: Selected when functioning as master or slave by proper configuration of the MSC<1:0> bits in the MODECON register.

3: The IOC is disabled when $\overline{MCLR}$ is enabled.

4: Weak pull-up always enabled when $\overline{MCLR}$ is enabled, otherwise the pull-up is under user control.

5: V_{REF2} output selected when configured as master by proper configuration of the MSC<1:0> bits in the MODECON register.

6: When RFB of MODECON<5> = `0`, the internal feedback resistor and $DESAT_P$ input are enabled. When RFB = `1`, I_{SOUT} is enabled.

Pin Diagram – 28-Pin QFN (MCP19117)

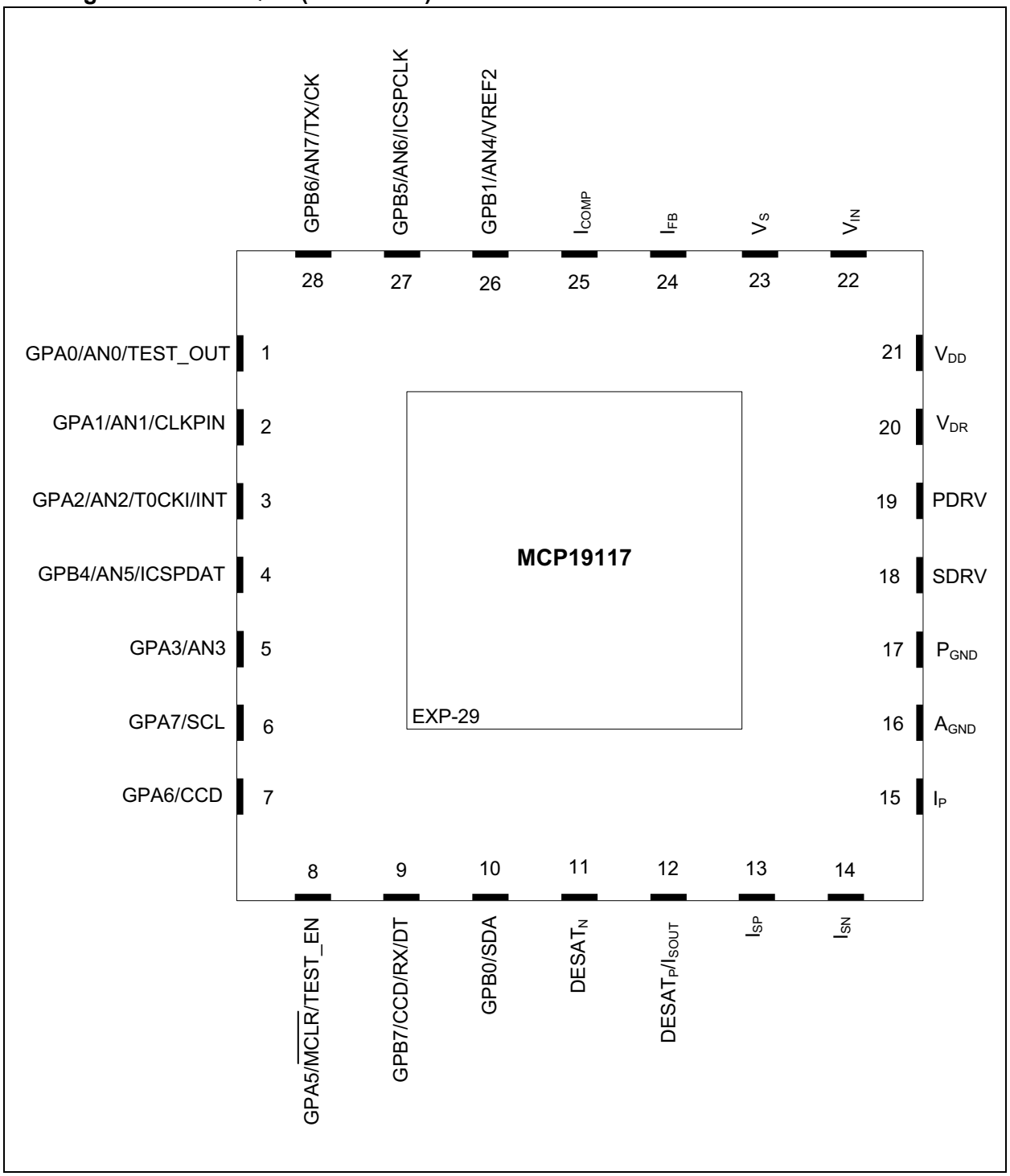

© 2015-2018 Microchip Technology Inc.

TABLE 2: 28-PIN QFN (MCP19117) SUMMARY

I/O	28-Pin QFN	ANSEL	A/D	Timers	MSSP/AUSART	Interrupt	Pull-Up	Basic	Additional
GPA0	1	Y	AN0	—	—	IOC	Y	—	Analog/Digital Debug Output (1)
GPA1	2	Y	AN1	—	—	IOC	Y	—	Sync Signal In/Out (2)
GPA2	3	Y	AN2	T0CKI	—	IOC INT	Y	—	—
GPA3	5	Y	AN3	—	—	IOC	Y	—	—
GPA5	8	N	—	—	—	IOC (3)	Y (4)	$\overline{MCLR}$	Test Enable Input
GPA6	7	N	—	—	—	IOC	Y	—	Dual Capture Input / Single Compare 1 Output
GPA7	6	N	—	—	SCL	IOC	N	—	—
GPB0	10	N	—	—	SDA	IOC	N	—	—
GPB1	26	Y	AN4	—	—	IOC	Y	—	V_{REF2} (5)
GPB4	4	Y	AN5	—	—	IOC	Y	ICSPDAT	—
GPB5	27	Y	AN6	—	—	IOC	Y	ICSPCLK	—
GPB6	28	Y	AN7	—	TX/CK	IOC	Y	—	—
GPB7	9	Y	—	—	RX/DT	IOC	Y	—	Single Compare2 Output
$DESAT_P$/ I_{SOUT}	12	N	—	—	—	—	—	—	$DESAT_P$ Input or I_{SOUT} Output (6)
$DESAT_N$	11	N	—	—	—	—	—	—	DESAT Negative Input
I_{SP}	13	N	—	—	—	—	Y	—	Current Sense Amplifier Non-inverting Input
I_{SN}	14	N	—	—	—	—	—	—	Current Sense Amplifier Inverting Input
I_P	15	N	—	—	—	—	—	—	Primary Input Current Sense
A_{GND}	16	N	—	—	—	—	—	A_{GND}	Small Signal Ground
P_{GND}	17	N	—	—	—	—	—	P_{GND}	Large Signal Ground
SDRV	18	N	—	—	—	—	—	—	Secondary LS Gate Drive Output
PDRV	19	N	—	—	—	—	—	—	Primary LS Gate Drive Output
V_{DR}	20	N	—	—	—	—	—	V_{DR}	Gate Drive Supply Voltage
V_{DD}	21	N	—	—	—	—	—	V_{DD}	V_{DD} Output
V_{IN}	22	N	—	—	—	—	—	V_{IN}	Input Supply Voltage
V_S	23	N	—	—	—	—	—	—	Output Voltage Sense
I_{FB}	24	N	—	—	—	—	—	—	Error Amplifier Feedback input
I_{COMP}	25	N	—	—	—	—	—	—	Error Amplifier Output

Note 1: The Analog/Digital Debug Output is selected through the control of the ABECON register.

2: Selected when functioning as master or slave by proper configuration of the MSC<1:0> bits in the MODECON register.

3: The IOC is disabled when $\overline{MCLR}$ is enabled.

4: Weak pull-up always enabled when $\overline{MCLR}$ is enabled, otherwise the pull-up is under user control.

5: V_{REF2} output selected when configured as master by proper configuration of the MSC<1:0> bits in the MODECON register.

6: When RFB of MODECON<6> = `0`, the internal feedback resistor is enabled allow with $DESAT_P$ input. When RFB = `1`, I_{SOUT} is enabled.

Table of Contents

Features 1
1.0 Device Overview 9
2.0 Pin Description 13
3.0 Functional Description 19
4.0 Electrical Characteristics 22
5.0 Digital Electrical Characteristics 31
5.0 Digital Electrical Characteristics 39
6.0 Configuring the MCP19116/7 39
7.0 Typical Performance Curves 53
8.0 System Bench Testing 57
9.0 Device Calibration 59
10.0 Addressable USART Module 69
11.0 Memory Organization 81
12.0 Device Configuration 93
13.0 Oscillator Modes 95
14.0 Resets 97
15.0 Interrupts 105
16.0 Power-Down Mode (Sleep) 115
17.0 Watchdog Timer (WDT) 117
18.0 Flash Program Memory Control 119
19.0 I/O Ports 125
20.0 Interrupt-On-Change 133
21.0 Internal Temperature Indicator Module 137
22.0 Analog-to-Digital Converter (ADC) Module 139
23.0 Timer0 Module 149
24.0 Timer1 Module 151
25.0 Timer2 Module 155
26.0 Enhanced PWM Module 157
27.0 Dual Capture/Compare (CCD) Module 161
28.0 PWM Control Logic 165
29.0 Master Synchronous Serial Port (MSSP) Module 167
30.0 Instruction Set Summary 211
31.0 In-Circuit Serial Programming™ (ICSP™) 221
32.0 Development Support 223
33.0 Packaging Information 227
Appendix A: Revision History 233
INDEX 235
The Microchip Web Site 241
Customer Change Notification Service 241
Customer Support 241
Product Identification System 243
Trademarks 245
Worldwide Sales and Service 246

© 2015-2018 Microchip Technology Inc.

TO OUR VALUED CUSTOMERS

It is our intention to provide our valued customers with the best documentation possible to ensure successful use of your Microchip products. To this end, we will continue to improve our publications to better suit your needs. Our publications will be refined and enhanced as new volumes and updates are introduced.

If you have any questions or comments regarding this publication, please contact the Marketing Communications Department via E-mail at **docerrors@microchip.com**. We welcome your feedback.

Most Current Data Sheet

To obtain the most up-to-date version of this data sheet, please register at our Worldwide Web site at:

http://www.microchip.com

You can determine the version of a data sheet by examining its literature number found on the bottom outside corner of any page. The last character of the literature number is the version number, (e.g., DS30000000A is version A of document DS30000000).

Errata

An errata sheet, describing minor operational differences from the data sheet and recommended workarounds, may exist for current devices. As device/documentation issues become known to us, we will publish an errata sheet. The errata will specify the revision of silicon and revision of document to which it applies.

To determine if an errata sheet exists for a particular device, please check with one of the following:

- Microchip's Worldwide Web site; **http://www.microchip.com**
- Your local Microchip sales office (see last page)

When contacting a sales office, please specify which device, revision of silicon and data sheet (include literature number) you are using.

Customer Notification System

Register on our web site at **www.microchip.com** to receive the most current information on all of our products.

NOTES:

© 2015-2018 Microchip Technology Inc.

1.0 DEVICE OVERVIEW

The MCP19116/7 devices are highly integrated, mixed-signal low-side synchronous controllers that operate from +4.5V to +42V. The family features an analog PWM controller with an integrated microcontroller core used for LED lighting systems, battery chargers and other low-side switch PWM applications. The MCP19116/7 devices are derived from the MCP19114/5, which share the same features and characteristics except for the addition of larger program memory (8k words vs. 4k words) and several design enhancements. These enhancements were added to the MCP19116/7 devices to improve calibration, increase accuracy and provide greater flexibility. The devices feature an analog internal PWM controller similar to the MCP1631, and a standard PIC® microcontroller similar to the PIC12F617.

Complete customization of device operating parameters, start-up or shutdown profiles, protection levels and fault handling procedures are accomplished by setting digital registers using Microchip's MPLAB® X Integrated Development Environment software and one of Microchip's many in-circuit debugger and device programmers.

The MCP19116/7 mixed-signal low-side synchronous controllers feature integrated programmable input UVLO/OVLO, programmable output overvoltage (OV), two low-side gate drive outputs with independent programmable dead time, programmable leading edge blanking (four steps), programmable 6-bit slope compensation and an integrated internal programmable oscillator for fixed-frequency applications.

An integrated 8-bit reference voltage (V_{REF}) is used for setting output current or voltage. An internal comparator supports quasi-resonant applications. Additional Capture and Compare modules are integrated for increased control, including enhanced dimming capability.

The MCP19116/7 devices contain two internal LDOs. A 5V LDO (V_{DD}) is used to power the internal processor and provide 5V externally. A 4V LDO (AV_{DD}) is used to power the internal analog circuitry. Either V_{DD} or AV_{DD} can be connected internally to the 10-bit Analog-to-Digital Converter reference input. The 5V external output can be used to supply the gate drive. An analog filter between the V_{DD} output and the V_{DR} input is recommended when implementing a 5V gate drive supplied from V_{DD}. Two 4.7 µF capacitors are recommended with one placed as close as possible to V_{DD} and one as close as possible to V_{DR}, separated by a 10Ω isolation resistor. DO NOT exceed 10 µF on the V_{DD}. An external supply is required to implement higher gate drive voltages.

By utilizing a Microchip Technology Incorporated TC1240A voltage doubler supplied from V_{DD} to provide V_{DR}, a 10V gate drive can be achieved.

A 4V LDO is used to power the internal analog circuitry. The two low-side drivers can be used to operate the power converter in bidirectional mode, enabling the "shaping" of LED dimming current in LED applications or developing bidirectional power converters for battery-powered applications.

The MCP19116 is packaged in a 24-lead 4 mm x 4 mm QFN. The MCP19117 is packaged in a 28-lead 5 mm x 5 mm QFN.

The ability for system designers to configure application-specific features allows users of the MCP19116/7 devices to save costly board real estate and additional component costs.

The General Purpose Input/Output (GPIO) of the MCP19116/7 can be configured to offer a status output:

- a device enable, to control an external switch
- a switching frequency synchronization output or input
- and even a device status or "heartbeat" indicator

With integrated features like output current adjustment and dynamic output voltage positioning, the MCP19116/7 family has the best in-class performance and highest integration level currently available.

Power trains supported by this architecture include but are not limited to boost, flyback, quasi-resonant flyback, SEPIC, Ćuk, etc.

Two low-side gate drivers are capable of sinking and sourcing 1A at 10V V_{DR}. With a 5V gate drive, the driver is capable of 0.5A sink and source. The user has the option to allow the V_{IN} UVLO to shut down the drivers by setting the UVLOEN bit. When this bit is not set, the device drivers will ride through the UVLO condition and continue to operate until V_{DR} reaches the gate drive UVLO value. This value is selectable at 2.7V or 5.4V and is always enabled. An internal reset for the microcontroller core is set to 2.0V. An internal comparator module is used to sense the desaturation of the flyback transformer to synchronize switching for quasi-resonant applications.

The operating input voltage for normal device operation ranges from +4.5V to +42V with an absolute maximum of 44V. The maximum transient voltage is 48V for 500 ms. An I^2C serial bus is used for device communications from the PWM controller to the system.

FIGURE 1-1: MCP19116/7 FLYBACK SYNCHRONOUS QUASI-RESONANT BLOCK DIAGRAM

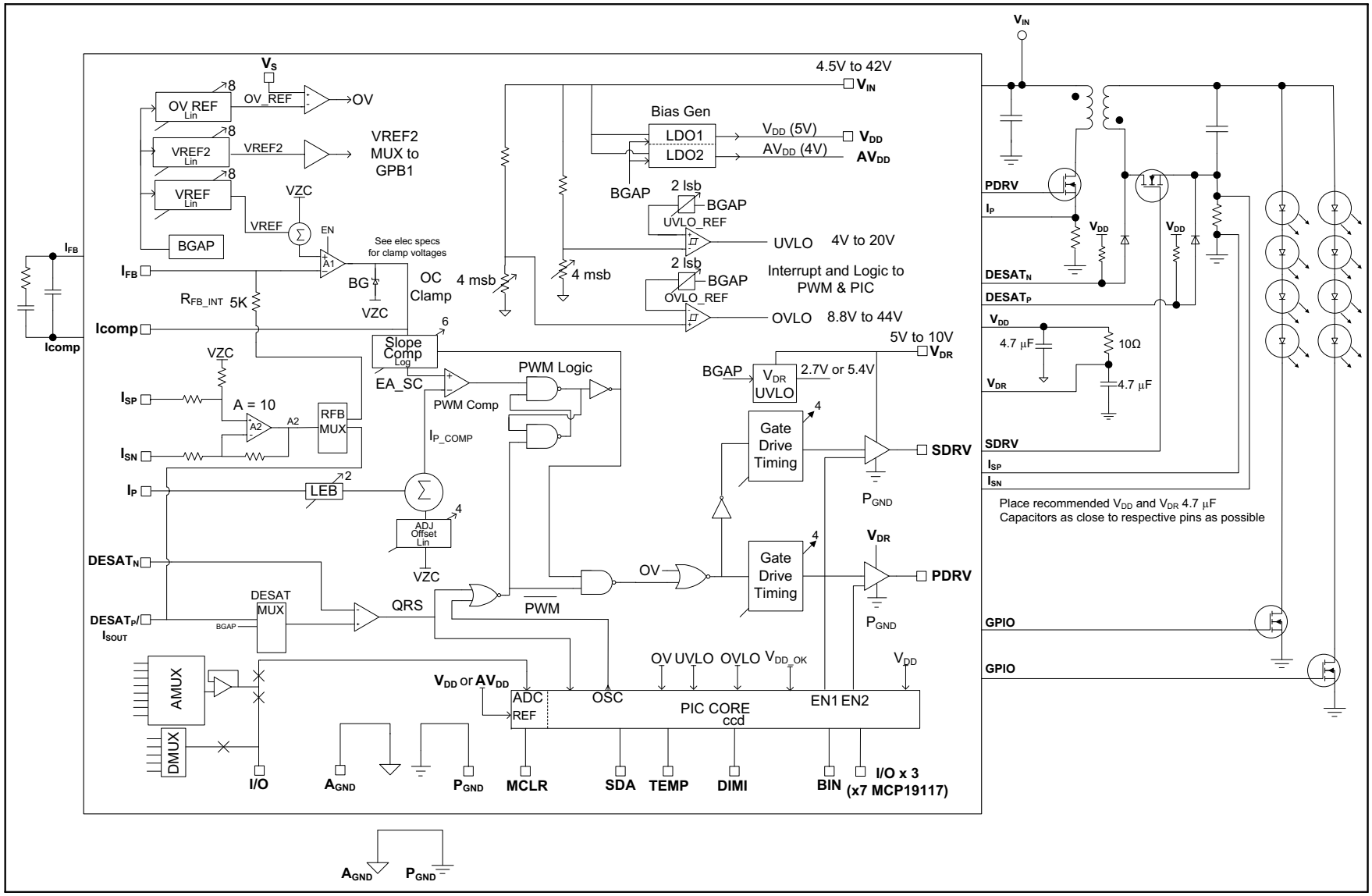

© 2015-2018 Microchip Technology Inc.

FIGURE 1-2: MCP19116 ĆUK SYNCHRONOUS POSITIVE OUTPUT APPLICATION DIAGRAM

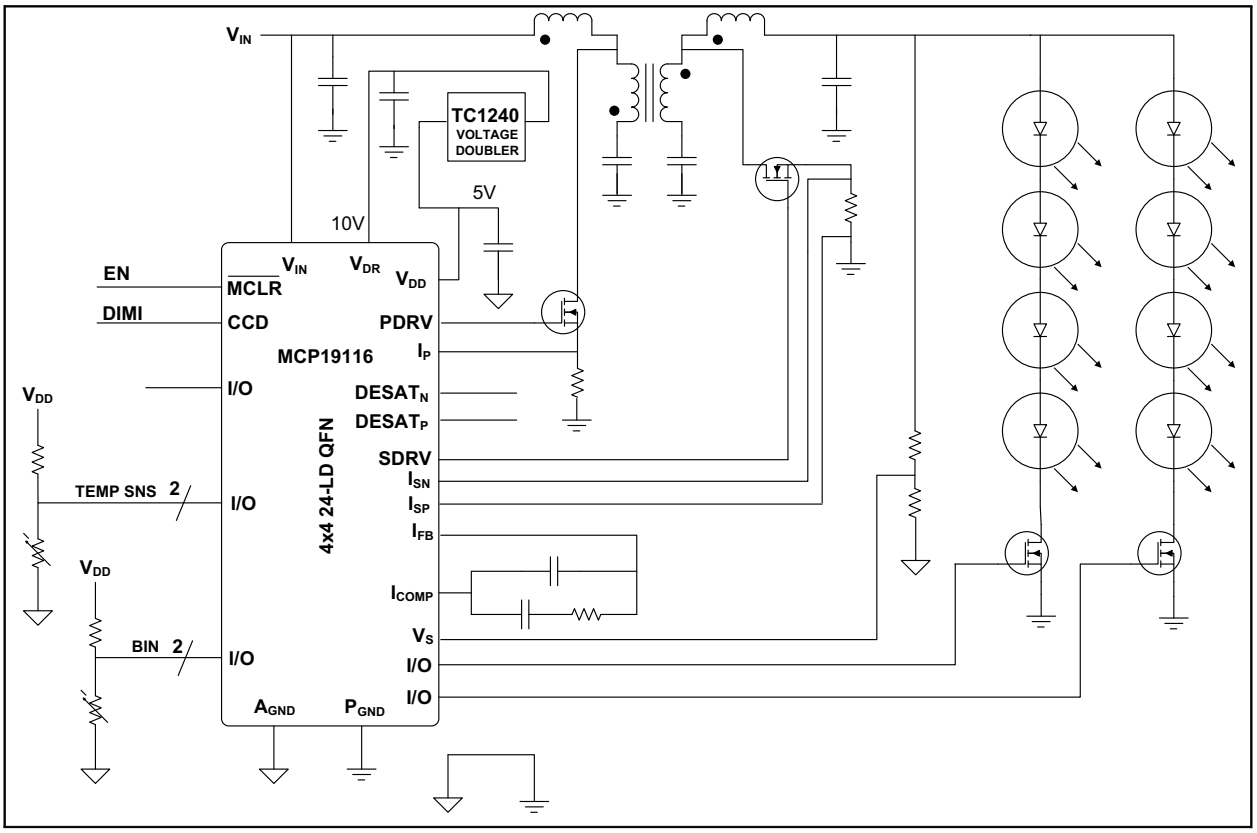

FIGURE 1-3: MCP19116 BOOST QUASI-RESONANT APPLICATION DIAGRAM

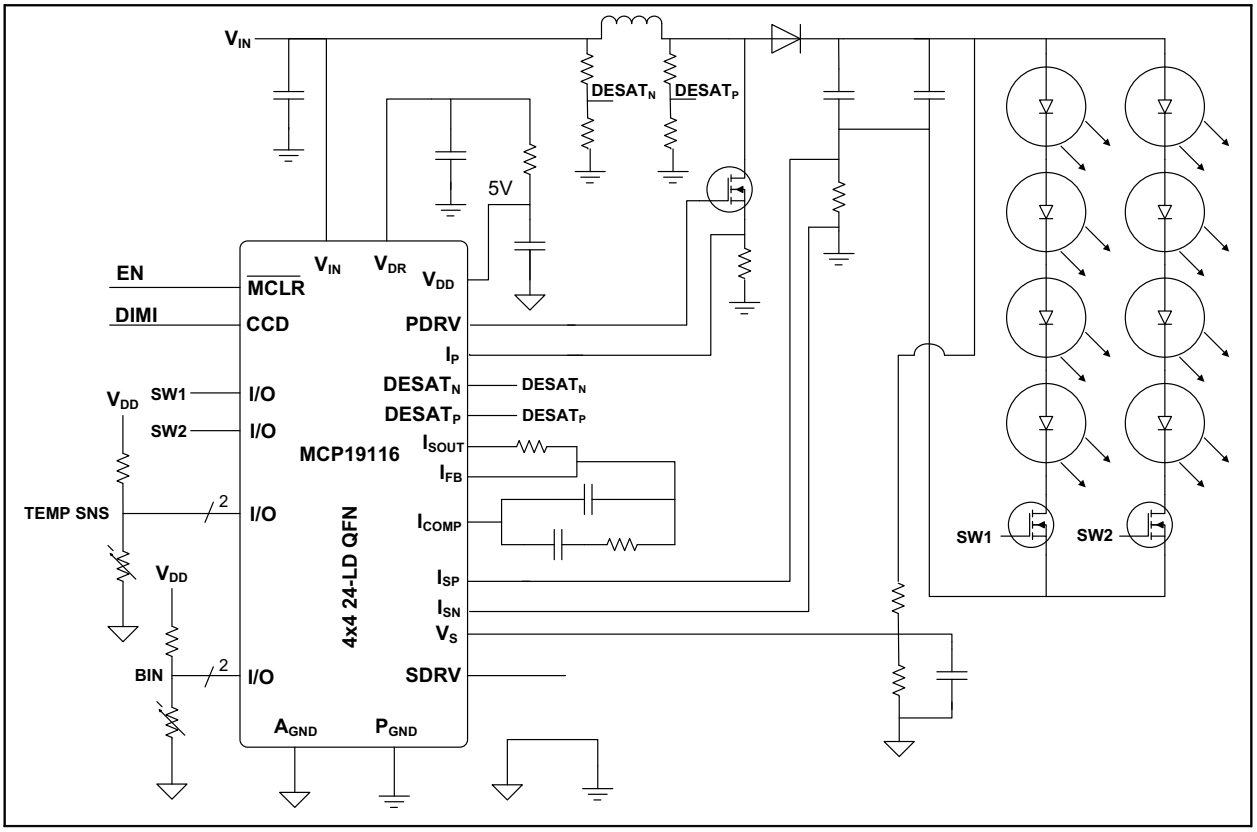

FIGURE 1-4: MICROCONTROLLER CORE BLOCK DIAGRAM

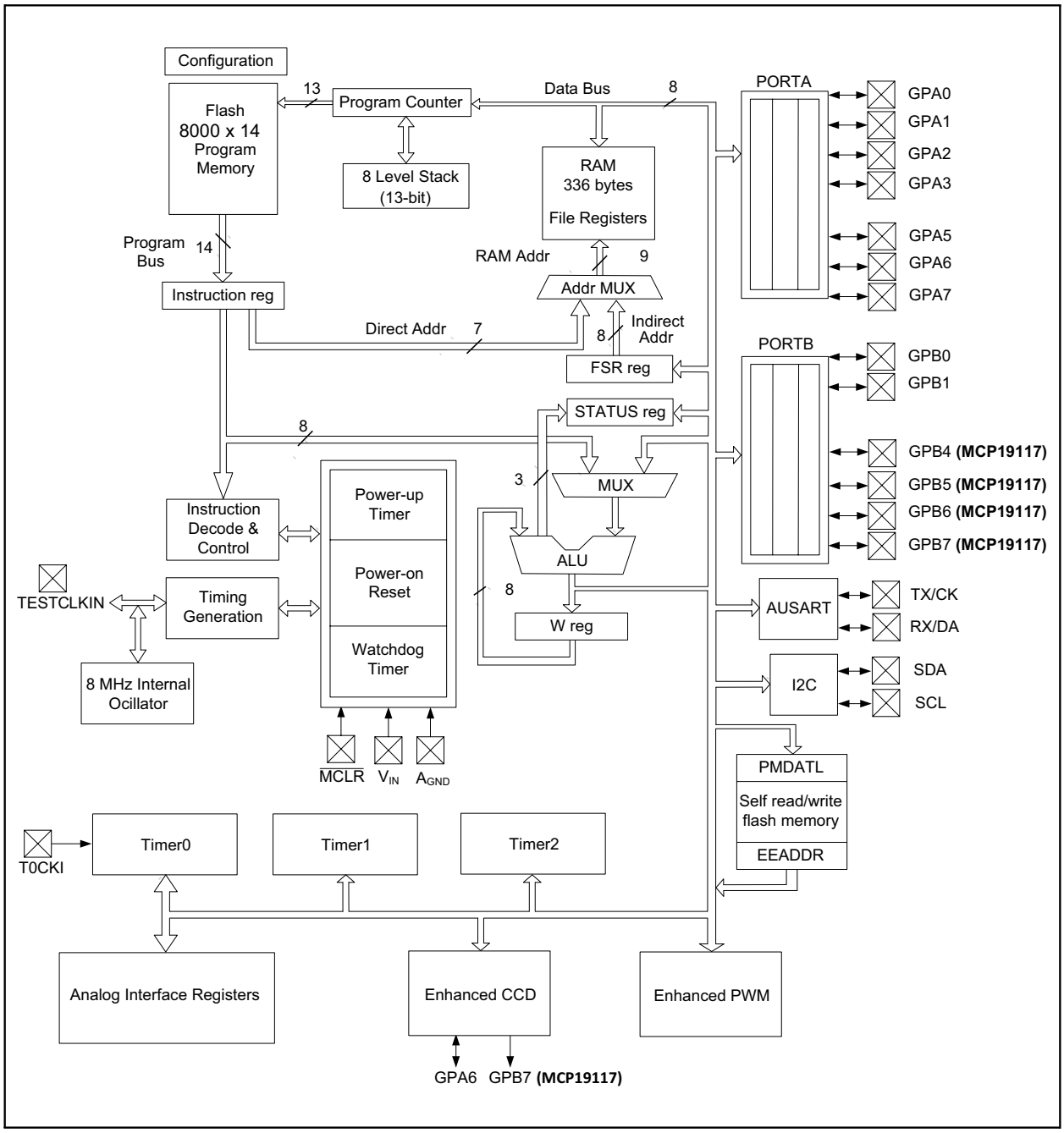

© 2015-2018 Microchip Technology Inc.

2.0 PIN DESCRIPTION

The 24-lead MCP19116 and 28-lead MCP19117 devices feature pins that have multiple functions associated with each pin. Table 2-1 provides a description of the different functions. Refer to **Section 2.1 "Detailed Pin Functional Description"** for detailed information.

TABLE 2-1: MCP19116/7 PINOUT DESCRIPTION

Name	Function	Input Type	Output Type	Description
GPA0/AN0/TEST_OUT	GPA0	TTL	CMOS	General purpose I/O
	AN0	AN	—	A/D Channel 0 input
	TEST_OUT	—	—	Internal analog/digital signal multiplexer output (1)
GPA1/AN1/CLKPIN	GPA1	TTL	CMOS	General purpose I/O
	AN1	AN	—	A/D Channel 1 input
	CLKPIN	ST	CMOS	Switching-frequency clock input or output (2)
GPA2/AN2/T0CKI/INT	GPA2	ST	CMOS	General purpose I/O
	AN2	AN	—	A/D Channel 2 input
	T0CKI	ST	—	Timer0 clock input
	INT	ST	—	External interrupt
GPA3/AN3	GPA3	TTL	CMOS	General purpose I/O
	AN3	AN	—	A/D Channel 3 input
GPA5/$\overline{\text{MCLR}}$	GPA5	TTL	—	General purpose input only
	$\overline{\text{MCLR}}$	ST	—	Master Clear with internal pull-up
GPA6/CCD/ICSPDAT/RX/DT	GPA6	ST	CMOS	General purpose I/O
ICSPDAT/RX/DT (**MCP19116** Only)	ICSPDAT	ST	CMOS	Serial Programming Data I/O (**MCP19116** only)
	CCD	ST	CMOS	Dual Capture Input. CCD1 Single Compare output
	RX	ST	—	USART asynchronous serial receive (**MCP19116** only)
	DT	ST	CMOS	USART synchronous serial data (**MCP19116** only)
GPA7/SCL/ICSPCLK	GPA7	ST	OD	General purpose open drain I/O
ICSPCLK (**MCP19116** only)	SCL	I^2C	OD	I^2C clock
	ICSPCLK	ST	—	Serial Programming Clock (**MCP19116** only)
GPB0/SDA	GPB0	TTL	OD	General purpose I/O
	SDA	I^2C	OD	I^2C data input/output
GPB1/AN4/VREF2/TX/CK	GPB1	TTL	CMOS	General-purpose I/O
TX/CK (**MCP19116** Only)	AN4	AN	—	A/D Channel 4 input
	VREF2	—	AN	VREF2 DAC Output (3)
	TX	—	CMOS	USART asynchronous serial transmit (**MCP19116** only)
	CK	ST	CMOS	USART synchronous serial clock (**MCP19116** only)

Legend: AN = Analog input or output; CMOS = CMOS compatible input or output; OD = Open-Drain; TTL = TTL compatible input; ST = Schmitt Trigger input with CMOS levels; I^2C = Schmitt Trigger input with I^2C

Note 1: The Analog/Digital Debug Output is selected through the control of the ABECON register.

2: Selected when functioning as master or slave by proper configuration of the MSC<1:0> bits in the MODECON register.

3: VREF2 output selected when configured as master by proper configuration of the MSC<1:0> bits in the MODECON register.

TABLE 2-1: MCP19116/7 PINOUT DESCRIPTION (CONTINUED)

Name	Function	Input Type	Output Type	Description
GPB4/AN5/ICSPDAT (**MCP19117** Only)	GPB4	TTL	CMOS	General purpose I/O
	AN5	AN	—	A/D Channel 5 input
	ICSPDAT	ST	CMOS	Primary Serial Programming Data I/O
GPB5/AN6/ICSPCLK (**MCP19117** Only)	GPB5	TTL	CMOS	General purpose I/O
	AN6	AN	—	A/D Channel 6 input
	ISCPCLK	ST	—	Primary Serial Programming Clock
GPB6/AN7/TX/CK (**MCP19117** Only)	GPB6	TTL	CMOS	General purpose I/O
	AN7	AN	—	A/D Channel 7 input
	TX	—	CMOS	USART asynchronous serial transmit
	CK	ST	CMOS	USART synchronous serial clock
GPB7/CCD/RX/DT (**MCP19117** Only)	GPB7	TTL	CMOS	General purpose I/O
	CCD	ST	CMOS	CCD2 Single Compare output.
	RX	ST	—	USART asynchronous serial receive
	DT	ST	CMOS	USART synchronous serial data
V_{IN}	V_{IN}	—	—	Device input supply voltage
V_{DD}	V_{DD}	—	—	Internal +5V LDO output pin
V_{DR}	V_{DR}	—	—	Gate drive supply voltage
A_{GND}	A_{GND}	—	—	Small signal quiet ground
P_{GND}	P_{GND}	—	—	Large signal power ground
PDRV	PDRV	—	—	Primary low-side MOSFET gate drive
SDRV	SDRV	—	—	Secondary low-side MOSFET gate drive
I_P	I_P	—	—	Primary input current sense
I_{SN}	I_{SN}	—	—	Secondary-current sense-amplifier negative input
I_{SP}	I_{SP}	—	—	Secondary-current sense-amplifier positive input
V_S	V_S	—	—	Sense voltage compared to overvoltage DAC
I_{FB}	I_{FB}	—	—	Error amplifier feedback input
I_{COMP}	I_{COMP}	—	—	Error amplifier output
$DESAT_P/I_{SOUT}$	$DESAT_P/I_{SOUT}$	—	—	$DESAT_P$: DESAT detect comparator positive input I_{SOUT}: Secondary-current sense-amplifier output
$DESAT_N$	$DESAT_N$	—	—	$DESAT_N$: DESAT detect comparator negative input

Legend: AN = Analog input or output CMOS = CMOS compatible input or output OD = Open-Drain
TTL = TTL compatible input ST = Schmitt Trigger input with CMOS levels I^2C = Schmitt Trigger input with I^2C

Note 1: The Analog/Digital Debug Output is selected through the control of the ABECON register.

2: Selected when functioning as master or slave by proper configuration of the MSC<1:0> bits in the MODECON register.

3: VREF2 output selected when configured as master by proper configuration of the MSC<1:0> bits in the MODECON register.

© 2015-2018 Microchip Technology Inc.

2.1 Detailed Pin Functional Description

2.1.1 GPA0 PIN

GPA0 is a general-purpose TTL input or CMOS output pin whose data direction is controlled in TRISGPA. An internal weak pull-up and interrupt-on-change are also available.

AN0 is an input to the A/D. To configure this pin to be read by the A/D on channel 0, bits TRISA0 and ANSA0 must be set.

The ABECON register can be configured to set this pin to the TEST_OUT function. It is a buffered output of the internal analog or digital signal multiplexers. Analog signals present on this pin are controlled by the ADCON0 register. Digital signals present on this pin are controlled by the ABECON register.

2.1.2 GPA1 PIN

GPA1 is a general-purpose TTL input or CMOS output pin whose data direction is controlled in TRISGPA. An internal weak pull-up and interrupt-on-change are also available.

AN1 is an input to the A/D. To configure this pin to be read by the A/D on channel 1, bits TRISA1 and ANSA1 must be set.

When the MCP19116/7 are configured as a master or slave, this pin is configured to be the switching-frequency synchronization input or output (CLKPIN).

2.1.3 GPA2 PIN

GPA2 is a general-purpose ST input or CMOS output pin whose data direction is controlled in TRISGPA. An internal weak pull-up and interrupt-on-change are also available.

AN2 is an input to the A/D. To configure this pin to be read by the A/D on channel 2, bits TRISA2 and ANSA2 must be set.

When bit T0CS is set in the OPTION_REG register, the T0CKI function is enabled. Refer to **Section 23.0 "Timer0 Module"** for more information.

GPA2 can also be configured as an external interrupt by setting the INTE bit. Refer to **Section 15.2 "GPA2/INT Interrupt"** for more information.

2.1.4 GPA3 PIN

GPA3 is a general purpose TTL input or CMOS output pin whose data direction is controlled in TRISGPA. An internal weak pull-up and interrupt-on-change are also available.

AN3 is an input to the A/D. To configure this pin to be read by the A/D on channel 3, bits TRISA3 and ANSA3 must be set.

2.1.5 GPA5 PIN

GPA5 is a general purpose TTL input only pin. An internal weak pull-up and interrupt-on-change are also available.

For programming purposes, this pin is to be connected to the $\overline{\text{MCLR}}$ pin of the serial programmer. Refer to **Section 31.0 "In-Circuit Serial Programming™ (ICSP™)"** for more information.

This pin is $\overline{\text{MCLR}}$ when the MCLRE bit is set in the CONFIG register.

2.1.6 GPA6 PIN

GPA6 is a general-purpose CMOS output ST input pin whose data direction is controlled in TRISGPA.

ICSPDAT is a serial programming data I/O function. This can be used in conjunction with ICSPCLK to serial-program the device.

MCP19116 Only: RX is the USART Asynchronous serial receive.

MCP19116 Only: DT is the USART Synchronous serial clock.

GPA6 is the Dual Capture input and CCD1 output compare. For more information, refer to **Section 27.0 "Dual Capture/Compare (CCD) Module"**.

2.1.7 GPA7 PIN

GPA7 is a true open-drain general purpose pin whose data direction is controlled in TRISGPA. There is no internal connection between this pin and device V_{DD}. This pin does not have a weak pull-up, but interrupt-on-change is available.

This pin is the primary ICSPCLK input. This can be used in conjunction with ICSPDAT to serial program the device.

When the MCP19116/7 is configured for I^2C communication, GPA7 functions as the I^2C clock (SCL). This pin must be configured as an input to allow proper operation. For more information, refer to **Section 29.2 "I^2C Mode Overview"**

2.1.8 GPB0 PIN

GPB0 is a true open-drain general-purpose pin whose data direction is controlled in TRISGPB. There is no internal connection between this pin and device V_{DD}. This pin does not have a weak pull-up, but interrupt-on-change is available. When the MCP19116/7 are configured for I^2C communication, GPB0 functions as the I^2C data (SDA). This pin must be configured as an input to allow proper operation. For more information, refer to **Section 29.2 "I^2C Mode Overview"**.

2.1.9 GPB1 PIN

GPB1 is a general-purpose TTL input or CMOS output pin whose data direction is controlled in TRISGPB. An internal weak pull-up and interrupt-on-change are also available.

AN4 is an input to the A/D. To configure this pin to be read by the A/D on channel 4, bits TRISB1 and ANSB1 must be set.

MCP19116 Only: TX is the USART Asynchronous serial transmit.

MCP19116 Only: CK is the USART Synchronous serial clock.

When the MCP19116/7 are configured as a master, this pin is configured to be the V_{REF2} DAC output.

2.1.10 GPB4 PIN **(MCP19117 ONLY)**

GPB4 is a general-purpose TTL input or CMOS output pin whose data direction is controlled in TRISGPB. An internal weak pull-up and interrupt-on-change are also available.

AN5 is an input to the A/D. To configure this pin to be read by the A/D on channel 5, bits TRISB4 and ANSB4 must be set.

ICSPDAT is the primary serial-programming data I/O function. This is used in conjunction with ICSPCLK to serial program the device.

2.1.11 GPB5 PIN **(MCP19117 ONLY)**

GPB5 is a general-purpose TTL input or CMOS output pin whose data direction is controlled in TRISGPB. An internal weak pull-up and interrupt-on-change are also available.

AN6 is an input to the A/D. To configure this pin to be read by the A/D on channel 6, bits TRISB5 and ANSB5 must be set.

ICSPCLK is the primary serial-programming clock function. This is used in conjunction with ICSPDAT to serial program the device.

2.1.12 GPB6 PIN **(MCP19117 ONLY)**

GPB6 is a general-purpose TTL input or CMOS output pin whose data direction is controlled in TRISGPB. An internal weak pull-up and interrupt-on-change are also available.

AN7 is an input to the A/D. To configure this pin to be read by the A/D on channel 7, bits TRISB6 and ANSB6 must be set.

MCP19117 Only: TX is the USART Asynchronous serial transmit.

MCP19117 Only: CK is the USART Synchronous serial clock.

2.1.13 GPB7 PIN **(MCP19117 ONLY)**

GPB7 is a general purpose TTL input or CMOS output pin whose data direction is controlled in TRISGPB. An internal weak pull-up and interrupt-on-change are also available.

RX is the USART Asynchronous serial receive.

DT is the USART Synchronous serial clock.

For more information, refer to **Section 10.0 "Addressable USART Module"**

GPB7 is the CCD2 output Compare. For more information, refer to **Section 27.0 "Dual Capture/Compare (CCD) Module"**.

2.1.14 $DESAT_N$ PIN

Internal comparator inverting input. Used during Quasi-Resonant operation for desaturation detection.

2.1.15 $DESAT_P/I_{SOUT}$ PIN

When using the internal comparator for desaturation detection during Quasi-Resonant operation, this pin connects to the comparator's noninverting input. The output of the remote sense current-sense amplifier gets configured to utilize the 5 kΩ internal feedback resistor. When not utilizing the internal comparator and not configured to use the 5 kΩ internal feedback resistor, the current sense amplifier gets connected to this pin and is I_{SOUT}.

2.1.16 I_{SP} PIN

The noninverting input to internal current-sense amplifier, typically used to differentially remote-sense secondary current. This pin can be internally pulled-up to V_{DD} by setting the <ISPUEN> bit in the PE1 register.

2.1.17 I_{SN} PIN

The inverting input to internal current-sense amplifier, typically used to differentially remote-sense secondary current.

© 2015-2018 Microchip Technology Inc.

2.1.18 I_P PIN

Primary input current-sense for current mode control and peak current limit. For voltage mode control, this pin can be connected to an artificial ramp.

2.1.19 A_{GND} PIN

A_{GND} is the small signal ground connection pin. This pin should be connected to the exposed pad on the bottom of the package.

2.1.20 P_{GND} PIN

Connect all large-signal level ground returns to P_{GND}. These large-signal level ground traces should have a small loop area and minimal length to prevent coupling of switching noise to sensitive traces.

2.1.21 SDRV PIN

The gate of the low-side secondary MOSFET is connected to SDRV. The PCB trace connecting SDRV to the gate must be of minimal length and appropriate width to handle the high-peak drive current and fast voltage transitions.

2.1.22 PDRV PIN

The gate of the low-side primary MOSFET is connected to PDRV. The PCB tracing connecting PDRV to the gate must be of minimal length and appropriate width to handle the high-peak drive currents and fast voltage transitions.

2.1.23 V_{DR} PIN

The supply for the low-side drivers is connected to this pin and has an absolute maximum rating of +13.5V. This pin can be connected by an RC filter to the V_{DD} pin.

2.1.24 V_{DD} PIN

The output of the internal +5.0V regulator is connected to this pin. It is recommended that a 1.0 µF minimum/ 10 µF maximum bypass capacitor be connected between this pin and the GND pin of the device. The bypass capacitor should be physically placed close to the device.

2.1.25 V_{IN} PIN

Input power connection pin of the device. It is recommended that capacitance be placed between this pin and the GND pin of the device.

2.1.26 V_S PIN

Analog input connected to the non-inverting input of the overvoltage comparator. Typically used as output-voltage overvoltage protection. The inverting input of the overvoltage comparator is controlled by the OV REF DAC.

2.1.27 I_{FB} PIN

Error-amplifier inverting feedback connection.

2.1.28 I_{COMP} PIN

Error-amplifier output signal.

2.1.29 EXPOSED PAD (EP)

It is recommended to connect the exposed pad to A_{GND}.

NOTES:

© 2015-2018 Microchip Technology Inc.

3.0 FUNCTIONAL DESCRIPTION

3.1 Linear Regulators

The operating input voltage for the MCP19116/7 ranges from +4.5V to +42V. There are two internal Low Dropout (LDO) voltage regulators. A 5V LDO is used to power the internal processor and provide a 5V output for external usage. A second LDO (AV_{DD}) is a 4V regulator and is used to power the remaining analog internal circuitry. AV_{DD} is factory calibrated and is the default ADC reference voltage. The ADC reference is switchable between AV_{DD} and V_{DD}. Using an LDO to power the MCP19116/7, the input voltage is monitored using a resistor divider. The MCP19116/7 also incorporate brown-out protection. Refer to **Section 14.3 "Brown-Out Reset (BOR)"** for details. The PIC core will reset at 2.0V V_{DD}.

3.2 Output Drive Circuitry

The MCP19116/7 integrate two low-side drivers used to drive the external low-side N-Channel power MOSFETs for synchronous applications, such as synchronous fly-back and synchronous Ćuk converters. Both converter types can be configured for non-synchronous control by replacing the synchronous FET with a diode. The fly-back is also capable of quasi-resonant operation. The MCP19116/7 can also be configured as a Boost or SEPIC switch-mode power supply (SMPS). In Boost mode, nonsynchronous fixed-frequency or nonsynchronous quasi-resonant control can be utilized. This device can also be used as a SEPIC SMPS in fixed-frequency nonsynchronous mode. The low-side drive is capable of switching the MOSFET at high frequency in typical SMPS applications. The gate drive (V_{DR}) can be supplied from 5V to 10V. The drive strength is capable of up to 1A sink/source with 10V gate drive and down to 0.5A sink/source with 5V gate drive. A programmable delay is used to set the gate turn-on dead time. This prevents overlap and shoot-through currents that can decrease the converter efficiency. Each driver has its own EN input controlled by the microcontroller core.

3.3 Current Sense

The output current is differentially sensed by the MCP19116/7. In low-current applications, this helps maintain high system efficiency by minimizing power dissipation in current-sense resistors. Differential current sensing also minimizes external ground-shift errors. The internal differential amplifier has a typical gain of 10 V/V and is factory trimmed.

3.4 Peak Current Mode

The MCP19116/7 is a peak current mode controlled device with the current-sensing element in series with the primary side MOSFET. Programmable leading edge blanking can be implemented to blank current spikes resulting from turn on. The blank time is controlled from the ICLEBCON register.

Primary-input current-offset adjust is also available via user programmability, thus limiting peak primary input current. This offset adjustment is controlled by the ICOACON register.

3.5 Magnetic Desaturation Detection

An internal comparator module is used to detect power train magnetic desaturation for quasi-resonant applications. The comparator output is used as a signal to synchronize the start of the next switching cycle. This operation differs from the traditional fixed-frequency application. The DESAT comparator output can be enabled and routed into the PWM circuitry or disabled for fixed-frequency applications. During Quasi-Resonant (QR) operation, the DESAT comparator output is enabled and combined with a pair of one-shot timers and a flip-flop to sustain PWM operation. Timer2 (TMR2) must be initialized and set to run at a frequency lower than the minimum QR operating frequency. When the CDSWDE bit is set in the DESATCON register, TMR2 serves as a watchdog.

An example of the order of events for a Flyback SMPS in synchronous QR operation is as follows:

- the primary gate drive (PDRV) goes high
- the output of the DESAT comparator is high
- the primary current increases until I_P reaches the level of the Error Amp and causes PWM comparator output to go low
- the PDRV goes low and the secondary gate drive (SDRV) goes high (after programmed dead time). This triggers the first one-shot to send a 200 ns pulse that resets the flip-flop and TMR2 (WDM_RESET)
- the 200 ns one-shot pulse design is implemented to mask any spurious transitions at the DESAT comparator output caused by switching noise
- the SDRV stays high until the secondary winding completely runs out of energy, at which time the output capacitance begins to source current back through the winding and secondary MOSFET
- the DESAT comparator detects this and its output goes low. This sets the flip-flop and triggers the second one-shot to send a 33 ns pulse to the control logic, causing the SDRV to go low and the PDRV to go high (after programmed dead time)
- the cycle then repeats. If, for any reason, the reset one-shot does not fire, the WDM_RESET signal stays low and TMR2 is allowed to run until the PWM signal kicks off a new cycle

The desaturation comparator module is controlled by the DESATCON register.

3.6 Start-Up

To control the output current during start-up, the MCP19116/7 devices have the capability to monotonically increase system current at the user's discretion. This is accomplished through the control of the reference voltage DAC (V_{REF}). Users also have firmware control over the switching frequency through Timer2 and the PR2 register. Maximum duty-cycle control is established through the PWMRL register. Refer to **Section 26.0, Enhanced PWM Module** for details. The entire start-up profile is under user control via software.

3.7 Driver Control Circuitry

The internal driver control circuitry of the MCP19116/7 is comprised of an error amplifier (EA), a high-speed comparator and a latch similar to the MCP1631.

The error amplifier generates the control voltage used by the high-speed PWM comparator. There is an internally generated reference voltage, V_{REF}. The difference or error between this internal reference voltage and the actual feedback voltage is the control voltage. Some applications will implement parked times where the gate drives are not active. For example, when changing between LED strings and after voltage repositioning, the user can disable the gate drives and park the error amplifier output low. During the time when the EA is parked, its output will be clamped low (1 * BG) such that it is in a known state when reactivated. Before the output switches are re-enabled, it may be necessary to re-enable the EA some time prior to enabling the output drivers. This prior-EA enable time will allow the EA to slew towards the intended target and prevent the secondary switch from turning on for an extensive period of time, unintentionally discharging the output capacitance and pulling the output voltage down. External compensation is used to stabilize the control system.

Since the MCP19116/7 devices are peak current mode controlled, the comparator compares the primary peak current waveform (I_P) that is based upon the current flowing in the primary side with the error amplifier control output voltage. This error amplifier control output voltage also has user-programmable slope compensation subtracted from it. In fixed-frequency applications, the slope compensation signal is generated to be greater than 1/2 the down slope of the inductor current waveform and is controlled by the SLPCRCON register. Offset adjust ability is also available to set the peak current limit of the primary switch for overcurrent protection. The range of the slope compensation ramp is specified. When the current sense signal reaches the level of the control voltage minus slope compensation, the ON cycle is terminated and the external PDRV switch is latched off until the beginning of the next cycle which begins at the next clock cycle.

To improve current regulation at low levels, a pedestal voltage (VZC) set to the BG (1.23V) is implemented. This virtual ground serves as the reference for the error amplifier (A1), slope compensation, current sense amplifier (A2) and the I_P offset adjustment.

An S-R latch (Set-Rest-Flip-Flop) is used to prevent the PWM circuitry from turning the external switch on until the beginning of the next clock cycle.

3.8 Fixed PWM Frequency

The switching frequency of the MCP19116/7 while not controlled by the DESAT comparator output is generated by using a single edge of the 8 MHz internal clock. The user sets the MCP19116/7 switching frequency by configuring the PR2 register. The maximum allowable PDRV duty cycle is adjustable and is controlled by the PWMRL register. The programmable range of the switching frequency will be 31.25 kHz to 2 MHz. The available switching frequency below 2 MHz is defined as F_{SW} = 8 MHz/N, where N is a whole number between $4 \leq N \leq 256$. Refer to **Section 26.0 "Enhanced PWM Module"** for details.

3.9 V_{REF}

This reference is used to generate the voltage connected to the noninverting input of the error amplifier. The entire analog control loop is raised to a virtual ground pedestal equal to the Band Gap voltage (1.23V).

3.10 OV REF

This reference is used to set the output overvoltage set point. It is compared to the V_S input pin, which is typically proportional to the output voltage based on a resistor divider. OV protection, when enabled, can be set to a value for the protection of system circuitry, or it can be used to "ripple" regulate the converter output voltage for repositioning purposes. For details, refer to Register 6-4.

3.11 Independent Gate Drive with Programmable Delay

Two independent low-side gate drives are integrated for synchronous applications. Programmable delay has been implemented to improve efficiency and prevent shoot-through currents. Each gate drive has an independent enable input controlled by the PE1 register and programmable dead time controlled by the DEADCON register.

© 2015-2018 Microchip Technology Inc.

3.12 Temperature Management

3.12.1 THERMAL SHUTDOWN

To protect the MCP19116/7 from overtemperature conditions, a 150°C junction temperature thermal shutdown has been implemented. When the junction temperature reaches this limit, the device disables the output drivers. In Shutdown mode, both PDRV and SDRV outputs are disabled and the overtemperature flag (OTIF) is set in the PIR2 register. When the junction temperature is reduced by 20°C to 130°C, the MCP19116/7 can resume normal output drive switching.

3.12.2 TEMPERATURE REPORTING

The MCP19116/7 devices have a second on-chip temperature monitoring circuit that can be read by the ADC through the analog test MUX. Refer to **Section 21.0 "Internal Temperature Indicator Module"** for details on this internal temperature monitoring circuit.

4.0 ELECTRICAL CHARACTERISTICS

4.1 ABSOLUTE MAXIMUM RATINGS †

V_{IN} - V_{GND} (DC) ..... –0.3V to +44V
V_{IN} (transient < 500 ms) ..... +48V
PDRV ..... (GND - 0.3V) to (V_{DR} + 0.3V)
SDRV ..... (GND - 0.3V) to (V_{DR} + 0.3V)
V_{DD} Internally Generated ..... +6.5V
V_{DR} Externally Generated ..... +13.5V
Voltage on $\overline{MCLR}$ with respect to GND ..... -0.3V to +13.5V
Maximum voltage: any other pin ..... +(V_{GND} - 0.3V) to (V_{DD} + 0.3V)
Maximum output current sunk by any single I/O pin ..... 25 mA
Maximum output current sourced by any single I/O pin ..... 25 mA
Maximum current sunk by all GPIO ..... 90 mA
Maximum current sourced by all GPIO ..... 35 mA
Storage Temperature ..... –65°C to +150°C
Maximum Junction Temperature ..... +150°C
Operating Junction Temperature ..... –40°C to +125°C
ESD protection on all pins (HBM) ..... 1.0 kV
ESD protection on all pins (MM) 200V

† Notice: Stresses above those listed under “Maximum Ratings” may cause permanent damage to the device. This is a stress rating only and functional operation of the device at those or any other conditions above those indicated in the operational listings of this specification is not implied. Exposure to maximum rating conditions for extended periods may affect device reliability.

4.2 Electrical Characteristics

Electrical Specifications: Unless otherwise noted, V_{IN} = 12V, F_{SW} = 150 kHz, T_A = +25°C. **Boldface** specifications apply over the T_A range of –40°C to +125°C.

Parameters	Sym.	Min.	Typ.	Max.	Units	Conditions
Input						
Input Voltage	V_{IN}	**4.5**	—	**42**	V	
Input Quiescent Current	I_Q	—	6	**7.5**	mA	V_{IN} = 12V, Not switching
		—	6	**7.5**		V_{IN} = 20V, Not switching
Shutdown Current	I_{SHDN}	—	50	**80**	µA	V_{IN} = 12V **(Note 1)**
Linear Regulator V_{DD}						
Internal Circuitry Bias Voltage	V_{DD}	**4.75**	5.1	**5.5**	V	V_{IN} = 6.0V to 42V
Maximum External V_{DD} Output Current	I_{DD_OUT}	**35**	—	—	mA	V_{IN} = 6.0V to 42V **(Note 2)**
Internal Circuitry Bias Voltage during SLEEP	V_{DD_SLEEP}	**2.4**	—	**4**	V	V_{IN} = 4.5V to 42V I_{DD_OUT} = 1mA
Maximum Available External V_{DD} Output Current During SLEEP	$I_{DD_OUT_SLEEP}$	**1**	—	—	mA	V_{IN} = 6.0V to 42V V_{DD} = V_{DD_SLEEP}

Note 1: Refer to **Section 16.0, Power-Down Mode (Sleep)**.
2: V_{DD} is the voltage present at the V_{DD} pin.
3: Dropout voltage is defined as the input-to-output voltage differential at which the output voltage drops 2% below its nominal value measured at a 1V differential between V_{IN} and V_{DD}.
4: Ensured by design, not production tested.
5: These parameters are characterized, but not production tested.
6: The V_{DD} LDO will limit the total source current to a maximum of 35 mA. Individually each pin can source a maximum of 15 mA.

© 2015-2018 Microchip Technology Inc.

4.2 Electrical Characteristics (Continued)

Electrical Specifications: Unless otherwise noted, V_{IN} = 12V, F_{SW} = 150 kHz, T_A = +25°C. **Boldface** specifications apply over the T_A range of –40°C to +125°C.

Parameters	Sym.	Min.	Typ.	Max.	Units	Conditions
Line Regulation	$\Delta V_{DD\text{-}OUT}$/ ($V_{DD\text{-}OUT}$ * ΔV_{IN})	**–0.1**	0.002	**0.1**	%/V	(V_{DD} + 1.0V) ≤ V_{IN} ≤ 20V **(Note 2)**
Load Regulation	$\Delta V_{DD\text{-}OUT}$/ $V_{DD\text{-}OUT}$	**–1.0**	0.1	**1.0**	%	I_{DD_OUT} = 1 mA to 20 mA **(Note 2)**
Output Short-Circuit Current	I_{DD_SC}	—	50	—	mA	V_{IN} = (V_{DD} + 1.0V) **(Note 2)**
Dropout Voltage	$V_{IN} – V_{DD}$	—	0.3	**0.5**	V	I_{DD_OUT} = 20 mA **(Notes 2 and 3)**
Power Supply Rejection Ratio	$PSRR_{LDO}$	—	60	—	dB	f ≤ 1000 Hz I_{DD_OUT} = 25 mA C_{IN} = 0 µF, C_{DD} = 1 µF
Linear Regulator AV_{DD}						
Internal Analog Supply Voltage	AV_{DD}	—	4.096	—	V	
AV_{DD} Tolerance	AV_{DD_TOL}	–2.5	±0.5	2.5	%	Trimmed at 25°C, 0°C to 125°C
		–3.3	—	3.3	%	-40°C to 0°C
Band Gap Voltage	BG	—	1.23	—	V	Trimmed at 1.0% tolerance
Band Gap Tolerance	BG_{TOL}	**–2.5**	—	**2.5**	%	
Input UVLO Voltage						
UVLO Range	$UVLO_{ON}$	**4**	—	**20**	V	V_{IN} Falling
$UVLO_{ON}$ Trip Tolerance	$UVLO_{TOL}$	**–14**	—	**14**	%	V_{IN} Falling UVLO trip set to 9V VINUVLO = 0x21h
UVLO Hysteresis	$UVLO_{HYS}$	**1**	4	**8**	%	Hysteresis is based upon the $UVLO_{ON}$ setting UVLO trip set to 9V VINUVLO = 0x21h
Resolution	nbits	—	6	—	bits	Logarithmic Steps
UVLO Comparator						
Input-to-Output Delay	TD	—	5	—	µs	100 ns rise time to 1V overdrive on V_{IN} V_{IN} > UVLO to flag set
Input OVLO Voltage						
OVLO Range	$OVLO_{ON}$	**8.8**	—	**44**	V	V_{IN} Rising
$OVLO_{ON}$ Trip Tolerance	$OVLO_{TOL}$	**–14**	—	**14**	%	V_{IN} Rising OVLO trip set to 18V VINOVLO = 0x1Fh

Note 1: Refer to **Section 16.0, Power-Down Mode (Sleep)**.

2: V_{DD} is the voltage present at the V_{DD} pin.

3: Dropout voltage is defined as the input-to-output voltage differential at which the output voltage drops 2% below its nominal value measured at a 1V differential between V_{IN} and V_{DD}.

4: Ensured by design, not production tested.

5: These parameters are characterized, but not production tested.

6: The V_{DD} LDO will limit the total source current to a maximum of 35 mA. Individually each pin can source a maximum of 15 mA.

4.2 Electrical Characteristics (Continued)

Electrical Specifications: Unless otherwise noted, V_{IN} = 12V, F_{SW} = 150 kHz, T_A = +25°C. **Boldface** specifications apply over the T_A range of –40°C to +125°C.

Parameters	Sym.	Min.	Typ.	Max.	Units	Conditions
OVLO Hysteresis	$OVLO_{HYS}$	**1**	5	**8**	%	Hysteresis is based upon the $OVLO_{ON}$ setting OVLO trip set to 18V VINOVLO = 0x1Fh
Resolution	nbits	—	6	—	bits	Logarithmic Steps
OVLO Comparator						
Input-to-Output Delay	TD	—	5	—	µs	100 ns rise time to 1V overdrive on V_{IN} V_{IN} > OVLO to flag set
Output OV DAC						
Resolution	nbits	—	8	—	bits	Linear DAC
Full-Scale Range	FSR	0	—	2 * BG	V	
Tolerance	$OVREF_{TOL}$	–2.0	±0.3	2.0	%	Trimmed @ code = 0xCC at 25°C, 0°C to 125°C
		–3.3	—	3.3	%	–40°C to 0°C
Output OV Comparator						
OV Hysteresis	OV_{HYS}	—	50	—	mV	
Input Bias Current	I_{BIAS}	—	±1	—	µA	
Common-Mode Input Voltage Range	V_{CMR}	**0**	—	**3.0**	V	**Note 4**
Input-to-Output Delay	TD	—	200	—	ns	100 ns rise time to 1V overdrive on V_S V_S > OV to flag set **(Note 4)**
Voltage Reference DAC (V_{REF})						
Resolution	nbits	—	8	—	bits	Linear DAC
Full-Scale Range	FSR	BG	—	2 * BG	V	Pedestal set to BG
Tolerance	V_{REF_TOL}	–2.0	±0.2	2.0	%	Trimmed @ code = 0xCC at 25°C, 0°C to 125°C
		–3.3	—	3.3	%	–40°C to 0°C

Note 1: Refer to **Section 16.0, Power-Down Mode (Sleep)**.

2: V_{DD} is the voltage present at the V_{DD} pin.

3: Dropout voltage is defined as the input-to-output voltage differential at which the output voltage drops 2% below its nominal value measured at a 1V differential between V_{IN} and V_{DD}.

4: Ensured by design, not production tested.

5: These parameters are characterized, but not production tested.

6: The V_{DD} LDO will limit the total source current to a maximum of 35 mA. Individually each pin can source a maximum of 15 mA.

© 2015-2018 Microchip Technology Inc.

4.2 Electrical Characteristics (Continued)

Electrical Specifications: Unless otherwise noted, V_{IN} = 12V, F_{SW} = 150 kHz, T_A = +25°C. **Boldface** specifications apply over the T_A range of –40°C to +125°C.

Parameters	Sym.	Min.	Typ.	Max.	Units	Conditions
Voltage Reference DAC (V_{REF2})						
Resolution	nbits	—	8	—	bits	Linear DAC
Full-Scale Range	FSR	0	—	BG	V	
Tolerance	V_{REF2_TOL}	–2.2	±0.2	2.2	%	Trimmed @ code = 0xCC at 25°C, 0°C to 125°C
		–3.3	—	3.3	%	–40°C to 0°C
Sink Current	I_{SINK}	**–3.0**	—	—	mA	V_{REF2} = 0x29 I_{SINK} = 3 mA ΔV_{REF2} < 60 mV
Source Current	I_{SOURCE}	**3.0**	—	—	mA	V_{REF2} = 0xFF I_{SOURCE} = 3 mA ΔV_{REF2} < 60mV
Current Sense Amplifier (A2)						
Input Offset Voltage	V_{OS}	—	2	—	mV	Trimmed
Amplifier PSRR	PSRR	—	65	—	dB	V_{CM} = 2 * BG
Closed-Loop Voltage Gain	$A2_{VCL}$	—	10	—	V/V	R_L = 5 kΩ to 2.048V, 100 mV < A2 < AV_{DD} – 100 mV, V_{CM} = BG
Closed Loop Voltage Gain Tolerance	$A2_{VCL_TOL}$	**–2.0**	0.5	**2.0**	%	Trimmed
Low-Level Output	V_{OL}	—	300	—	mV	R_L = 5 kΩ to 2.048V
Gain-Bandwidth Product	GBWP	—	10	—	MHz	AV_{DD} = 4V
Input Impedance	R_{IN}	—	10	—	kΩ	
Sink Current	I_{SINK}	**–3.0**	—	—	mA	I_{SP} = I_{SN} = GND R_L = 300Ω to 2 * BG
Source Current	I_{SOURCE}	**3.0**	—	—	mA	I_{SP} = I_{SN} = GND R_L = 300Ω to GND
Common-Mode Range	V_{CMR}	**GND–0.3**	—	**V_{BG}+0.3**	V	**Note 4**
Common-Mode Rejection Ratio	CMRR	—	70	—	dB	
Internal Feedback Resistor	R_{FB_INT}	—	5	—	kΩ	
Internal Feedback Resistor Tolerance	$R_{FB_INT_TOL}$	—	2	—	%	Trimmed

Note 1: Refer to **Section 16.0, Power-Down Mode (Sleep)**.

2: V_{DD} is the voltage present at the V_{DD} pin.

3: Dropout voltage is defined as the input-to-output voltage differential at which the output voltage drops 2% below its nominal value measured at a 1V differential between V_{IN} and V_{DD}.

4: Ensured by design, not production tested.

5: These parameters are characterized, but not production tested.

6: The V_{DD} LDO will limit the total source current to a maximum of 35 mA. Individually each pin can source a maximum of 15 mA.

4.2 Electrical Characteristics (Continued)

Electrical Specifications: Unless otherwise noted, V_{IN} = 12V, F_{SW} = 150 kHz, T_A = +25°C. **Boldface** specifications apply over the T_A range of –40°C to +125°C.

Parameters	Sym.	Min.	Typ.	Max.	Units	Conditions
Pedestal Voltage						
Pedestal Voltage Level	VZC	—	V_{BG}	—	V	
Error Amplifier (EA)						
Input Offset Voltage	V_{OS}	—	2	—	mV	Trimmed
Common-Mode Rejection Ratio	CMRR	—	65	—	dB	V_{CM} = 0V to BG
Open-Loop Voltage Gain	A_{VOL}	—	70	—	dB	**Note 4**
Low-Level Clamp Value	V_{OL}	**BG – 0.35**	BG - 0.22	**BG – 0.1**	V	R_L = 5 kΩ to 2.048V
Gain-Bandwidth Product	GBWP	—	3.5	—	MHz	
Error Amplifier Sink Current	I_{SINK}	**–3**	—	—	mA	V_{REF} = BG, I_{FB} = I_{COMP} R_L = 150Ω to 1.5 * BG
Error Amplifier Source Current	I_{SOURCE}	**3**	—	—	mA	V_{REF} = 2 * BG I_{FB} = I_{COMP} R_L = 150Ω to 1.5 * BG
Maximum Error Amplifier Output High-Level Clamp	V_{EA_MAX}	—	2 x BG	—	V	EA Output clamped to 2 x BG Voltage
Peak Current Sense Input						
Maximum Primary Current Sense Signal Voltage	V_{IP_MAX}	—	BG	1.5	V	**Note 4**
PWM Comparator						
Input-to-Output Delay	TD	—	11	**20**	ns	**Note 4**
Peak Current Leading Edge Blanking						
Resolution	LEB	—	2	—	bits	
Blanking Time Adjustable Range	LEB_{RANGE}	0	—	256	ns	4-Step Programmable Range: 0, 50,100, and 200 ns **(Note 4)**
Offset Adjustment (I_P Sense)						
Resolution	OS_{ADJ}	—	4	—	bits	
Offset Adjustment Range	OS_{ADJ_RANGE}	0	—	750	mV	
Offset Adjustment Step Size	OS_{ADJ_STEP}	—	50	—	mV	Linear Steps

Note 1: Refer to **Section 16.0, Power-Down Mode (Sleep)**.
2: V_{DD} is the voltage present at the V_{DD} pin.
3: Dropout voltage is defined as the input-to-output voltage differential at which the output voltage drops 2% below its nominal value measured at a 1V differential between V_{IN} and V_{DD}.
4: Ensured by design, not production tested.
5: These parameters are characterized, but not production tested.
6: The V_{DD} LDO will limit the total source current to a maximum of 35 mA. Individually each pin can source a maximum of 15 mA.

© 2015-2018 Microchip Technology Inc.

4.2 Electrical Characteristics (Continued)

Electrical Specifications: Unless otherwise noted, V_{IN} = 12V, F_{SW} = 150 kHz, T_A = +25°C. **Boldface** specifications apply over the T_A range of –40°C to +125°C.

Parameters	Sym.	Min.	Typ.	Max.	Units	Conditions
Adjustable Slope Compensation						
Resolution	SC_{RES}	—	6	—	bits	Log Steps
Slope	m	3.14	—	432.5	mV/µs	
Slope Step Size	SC_{STEP}	—	8	—	%	Log Steps
Ramp Set Point Tolerance	m_{TOL}	—	±1	±30	%	Code 16d at 15.4mV/us Code 32d at 52.8mV/us
Desaturation Detection Comparator						
Input Offset Voltage	V_{OS}	—	±1	—	mV	Trimmed, 5-bits adjustable
Input Bias Current	I_{BIAS}	—	±1	—	µA	Internal Circuit Dependent
Common-Mode Input Voltage Range	V_{CMR}	GND – 0.3V	—	2.7	V	**Note 4**
Input-to-Output Delay	TD	—	20	—	ns	
V_{DR_UVLO}						
V_{DR} Resistance	V_{DR_RIN}	—	220	—	kΩ	
V_{DR_UVLO} (2.7V V_{DR} Falling)	$V_{DR_UVLO_2.7_F}$	2.45	—	2.9	V	
V_{DR_UVLO} (2.7 V_{DR} Rising)	$V_{DR_UVLO_2.7_R}$	2.68	—	3.23	V	
V_{DR_UVLO} (2.7V Hysteresis)	$V_{DR_UVLO\ 2.7\ HYS}$	190	—	415	mV	
V_{DR_UVLO} (5.4V V_{DR} Falling)	$V_{DR_UVLO_5.4_F}$	4.7	—	5.96	V	
V_{DR_UVLO} (5.4V V_{DR} Rising)	$V_{DR_UVLO_5.4_R}$	5.15	—	6.56	V	
V_{DR_UVLO} (5.4V Hysteresis)	$V_{DR_UVLO\ 5.4\ HYS}$	380	—	830	mV	
Output Driver (PDRV and SDRV)						
PDRV/SDRV Gate Drive Source Resistance	$R_{DR\text{-}SRC}$	—	—	**13.5**	Ω	V_{DR} = 4.5V **(Note 4)**
PDRV/SDRV Gate Drive Sink Resistance	$R_{DR\text{-}SINK}$	—	—	**12**	Ω	V_{DR} = 4.5V **(Note 4)**
PDRV/SDRV Gate Drive Source Current	$I_{DR\text{-}SRC}$	—	0.5	—	A	V_{DR} = 5V
		—	1.0	—		V_{DR} = 10V **(Note 4)**
PDRV/SDRV Gate Drive Sink Current	$I_{DR\text{-}SINK}$	—	0.5	—	A	V_{DR} = 5V
		—	1.0	—		V_{DR} = 10V **(Note 4)**

Note 1: Refer to **Section 16.0, Power-Down Mode (Sleep)**.

2: V_{DD} is the voltage present at the V_{DD} pin.

3: Dropout voltage is defined as the input-to-output voltage differential at which the output voltage drops 2% below its nominal value measured at a 1V differential between V_{IN} and V_{DD}.

4: Ensured by design, not production tested.

5: These parameters are characterized, but not production tested.

6: The V_{DD} LDO will limit the total source current to a maximum of 35 mA. Individually each pin can source a maximum of 15 mA.

© 2015-2018 Microchip Technology Inc.

4.2 Electrical Characteristics (Continued)

Electrical Specifications: Unless otherwise noted, V_{IN} = 12V, F_{SW} = 150 kHz, T_A = +25°C. **Boldface** specifications apply over the T_A range of –40°C to +125°C.

Parameters	Sym.	Min.	Typ.	Max.	Units	Conditions
Dead-Time Adjustment						
Resolution	DT_{RES}	—	4	—	bits	
Dead-Time Adjustable Range	DT_{RANGE}	16	—	256	ns	
Dead-Time Step Size	DT_{STEP}	—	16	—	ns	Linear Steps
Dead-Time Tolerance	DT_{TOL}	—	±8	—	ns	
Oscillator/PWM						
Internal Oscillator Frequency	F_{OSC}	**7.60**	8.00	**8.40**	MHz	
Switching Frequency	F_{SW}	—	F_{OSC}/N	—	MHz	
Switching Frequency Range Select	N	4	—	255	—	F_{MAX} = 2 MHz
A/D Converter (ADC) Characteristics						
Resolution	N_R	—	—	10	bits	
Integral Error	E_{IL}	—	—	**±1**	LSb	V_{REF_ADC} = AV_{DD} V_{REF_ADC} = V_{DD}
Differential Error	E_{DL}	—	—	**±1**	LSb	No missing code in 10 bits V_{REF_ADC} = AV_{DD} V_{REF_ADC} = V_{DD} **(Note 5)**
Offset Error	E_{OFF}	—	+3.0	**+7**	LSb	V_{REF_ADC} = AV_{DD} V_{REF_ADC} = V_{DD}
Gain Error	E_{GN}	—	±2	**±6**	LSb	V_{REF_ADC} = AV_{DD} V_{REF_ADC} = V_{DD}
Selectable ADC Reference Voltage	V_{REF_ADC}	—	AV_{DD}	—	V	AV_{DD} = 4V ADCON1<VCFG=0>
			V_{DD}	—	V	V_{DD} = 5V ADCON1<VCFG=0>
Full-Scale Range	$FSR_{A/D}$	GND	—	AV_{DD}	V	AV_{DD} selected as ADC Reference
		GND	—	V_{DD}	V	V_{DD} selected as ADC Reference

Note 1: Refer to **Section 16.0, Power-Down Mode (Sleep)**.

2: V_{DD} is the voltage present at the V_{DD} pin.

3: Dropout voltage is defined as the input-to-output voltage differential at which the output voltage drops 2% below its nominal value measured at a 1V differential between V_{IN} and V_{DD}.

4: Ensured by design, not production tested.

5: These parameters are characterized, but not production tested.

6: The V_{DD} LDO will limit the total source current to a maximum of 35 mA. Individually each pin can source a maximum of 15 mA.

© 2015-2018 Microchip Technology Inc.

4.2 Electrical Characteristics (Continued)

Electrical Specifications: Unless otherwise noted, V_{IN} = 12V, F_{SW} = 150 kHz, T_A = +25°C. **Boldface** specifications apply over the T_A range of –40°C to +125°C.

Parameters	Sym.	Min.	Typ.	Max.	Units	Conditions
GPIO Pins						
Maximum GPIO Sink Current	I_{SINK_GPIO}	—	—	90	mA	**Note 6**
Maximum GPIO Source Current	I_{SOURCE_GPIO}	—	—	35	mA	**Note 6**
GPIO Weak Pull-Up Current	$I_{PULL\text{-}UP_GPIO}$	50	250	400	µA	
GPIO Input Low Voltage	V_{GPIO_IL}	**GND**	—	**0.8**	V	I/O Port with TTL buffer V_{DD} = 5V
		GND	—	**0.2 V_{DD}**	V	I/O Port with Schmitt Trigger buffer, V_{DD} = 5V
		GND	—	**0.2 V_{DD}**	V	$\overline{MCLR}$
GPIO Input High Voltage	V_{GPIO_IH}	**2.0**	—	**V_{DD}**	V	I/O Port with TTL buffer, V_{DD} = 5V
		0.8V_{DD}	—	**V_{DD}**	V	I/O Port with Schmitt Trigger buffer, V_{DD} = 5V
		0.8V_{DD}	—	**V_{DD}**	V	$\overline{MCLR}$
GPIO Output Low Voltage	V_{GPIO_OL}	—	—	**0.12 V_{DD}**	V	I_{OL} = 7 mA, V_{DD} = 5V
GPIO Output High Voltage	V_{GPIO_OH}	V_{DD} – 0.7	—	—	V	I_{OH} = 2.5 mA V_{DD} = 5V
GPIO Input Leakage Current	$GPIO_I_{IL}$	—	±0.1	**±1**	µA	Negative current is defined as current sourced by the pin.
POR						
Power-on Reset Voltage	V_{POR}	—	2.13	—	V	V_{DD} Rising
Power-on Reset Voltage Hysteresis	V_{POR_HYS}	—	100	—	mV	
Thermal Shutdown						
Thermal Shutdown	T_{SHD}	—	150	—	°C	
Thermal Shutdown Hysteresis	T_{SHD_HYS}	—	20	—	°C	

Note 1: Refer to **Section 16.0, Power-Down Mode (Sleep)**.

2: V_{DD} is the voltage present at the V_{DD} pin.

3: Dropout voltage is defined as the input-to-output voltage differential at which the output voltage drops 2% below its nominal value measured at a 1V differential between V_{IN} and V_{DD}.

4: Ensured by design, not production tested.

5: These parameters are characterized, but not production tested.

6: The V_{DD} LDO will limit the total source current to a maximum of 35 mA. Individually each pin can source a maximum of 15 mA.

4.3 Thermal Specifications

Parameters	Sym.	Min.	Typ.	Max.	Units
Temperature Ranges					
Specified Temperature Range	T_A	-40	—	+125	°C
Operating Junction Temperature Range	T_J	-40	—	+125	°C
Maximum Junction Temperature	T_J	—	—	+150	°C
Storage Temperature Range	T_A	-65	—	+150	°C
Thermal Package Resistances					
Thermal Resistance, 24L-QFN 4x4	θ_{JA}	—	42	—	°C/W
Thermal Resistance, 28L-QFN 5x5	θ_{JA}	—	35.3	—	°C/W

© 2015-2018 Microchip Technology Inc.

5.0 DIGITAL ELECTRICAL CHARACTERISTICS

5.1 Timing Parameter Symbology

The timing parameter symbols have been created with one of the following formats:

1. TppS2ppS
2. TppS
3. $T_{CC:ST}$ (I^2C specifications only)
4. Ts (I^2C specifications only)

T			
F	Frequency	T	Time

Lowercase letters (pp) and their meanings:

pp			
cc	CCP1	osc	OSC1
ck	CLKOUT	rd	$\overline{RD}$
cs	$\overline{CS}$	rw	$\overline{RD}$ or $\overline{WR}$
di	SDI	sc	SCK
do	SDO	ss	$\overline{SS}$
dt	Data in	t0	T0CKI
io	I/O port	wr	$\overline{WR}$
mc	$\overline{MCLR}$		

Uppercase letters and their meanings:

S			
F	Fall	P	Period
H	High	R	Rise
I	Invalid (high-impedance)	V	Valid
L	Low	Z	High-Impedance
I^2C only			
AA	Output Access	High	High
BUF	Bus Free	Low	Low

$T_{CC:ST}$ (I^2C specifications only)

CC			
HD	Hold	SU	Setup
ST			
DAT	DATA Input Hold	STO	STOP Condition
STA	START Condition		

FIGURE 5-1: LOAD CONDITIONS

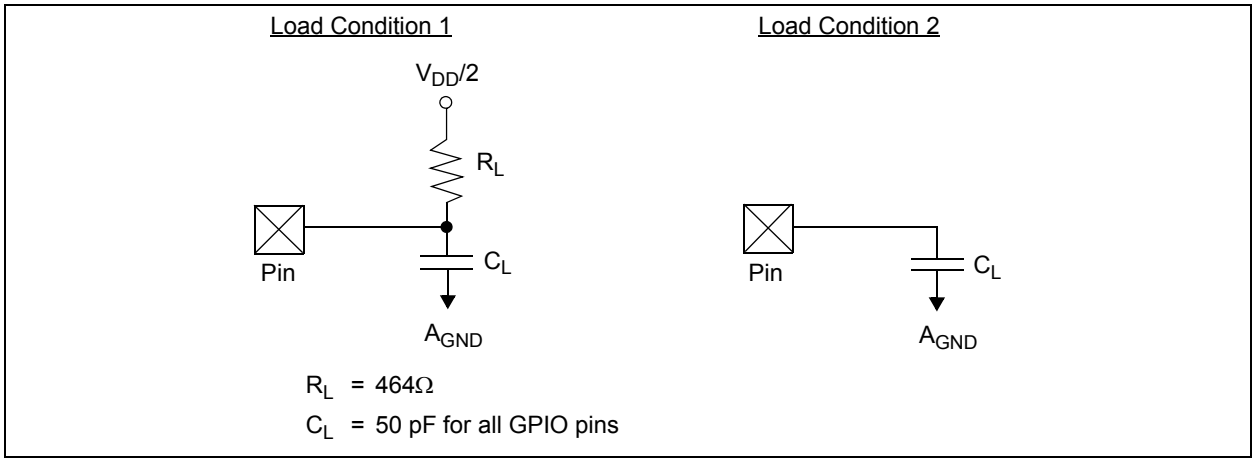

5.2 AC Characteristics: MCP19116 (Industrial, Extended)

FIGURE 5-2: EXTERNAL CLOCK TIMING

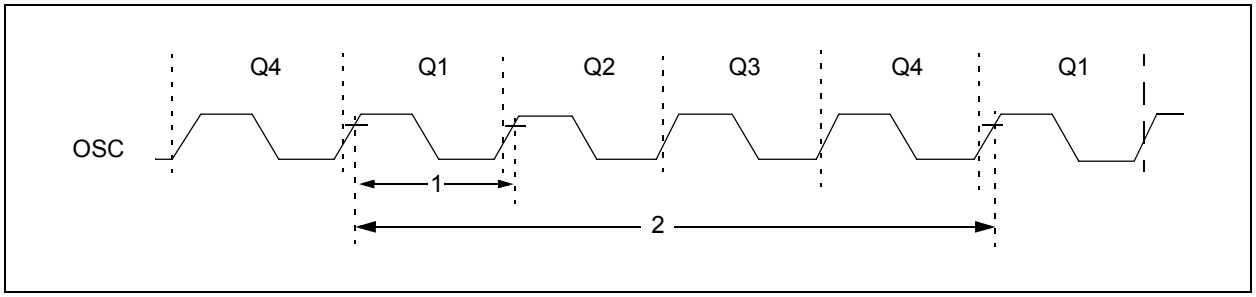

TABLE 5-1: EXTERNAL CLOCK TIMING REQUIREMENTS

Param. No.	Sym.	Characteristic	Min.	Typ.†	Max.	Units	Conditions
1	F_{OSC}	Oscillator Frequency (1)	—	8	—	MHz	
2	T_{OSC}	Oscillator Period (1)	—	250	—	ns	
3	T_{CY}	Instruction Cycle Time (1, 2)	—	T_{CY}	∞	ns	$T_{CY} = 4 * T_{OSC}$

* These parameters are characterized but not tested.

† Data in "Typ." column is at V_{IN} = 12V (V_{DD} = 5V), 25°C unless otherwise stated. These parameters are for design guidance only and are not tested.

Note 1: All specified values are based on characterization data for that particular oscillator type under standard operating conditions with the device executing code.

2: Instruction cycle period (T_{CY}) equals four times the input oscillator time base period.

© 2015-2018 Microchip Technology Inc.

FIGURE 5-3: I/O TIMING

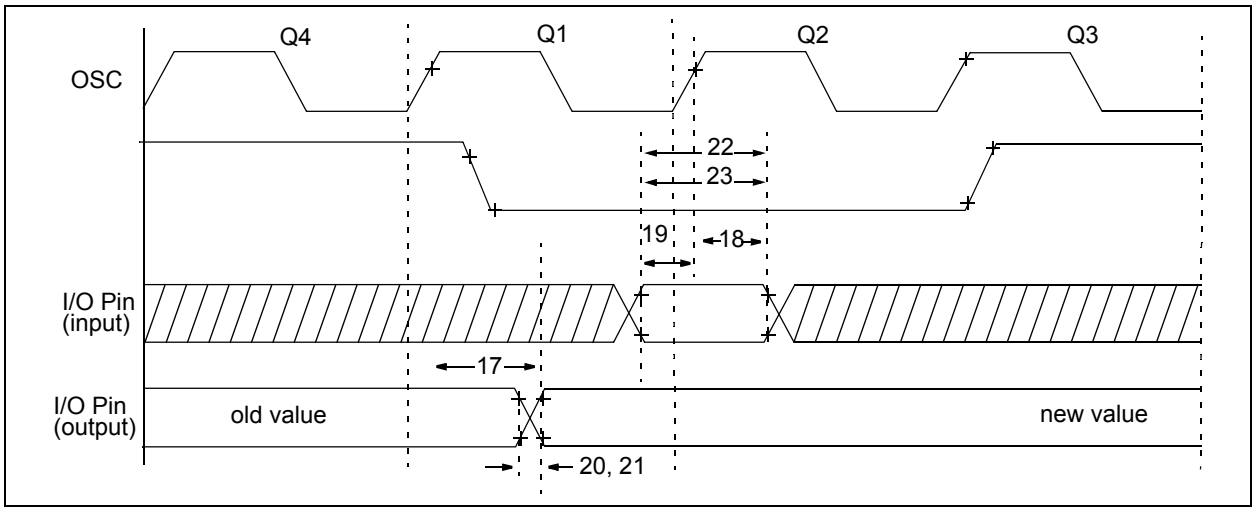

TABLE 5-2: I/O TIMING REQUIREMENTS

Param. No.	Sym.	Characteristic	Min.	Typ.†	Max.	Units	Conditions
17	TosH2ioV	OSC1↑ (Q1 cycle) to Port out valid	—	50	70*	ns	
18	TosH2ioI	OSC1↑ (Q2 cycle) to Port input invalid (I/O in hold time)	50	—	—	ns	
19	TioV2osH	Port input valid to OSC1↑ (I/O in setup time)	20	—	—	ns	
20	TioR	Port output rise time	—	32	40	ns	
21	TioF	Port output fall time	—	15	30	ns	
22*	Tinp	INT pin high or low time	25	—	—	ns	
23*	T_{RABP}	GPIO interrupt-on-change new input level time	T_{CY}	—	—	ns	

† Data in “Typ” column is at V_{IN} = 12V (V_{DD} = 5V), 25°C unless otherwise stated.

* These parameters are characterized but not tested.

FIGURE 5-4: RESET, WATCHDOG TIMER, OSCILLATOR START-UP TIMER AND POWER-UP TIMER TIMING

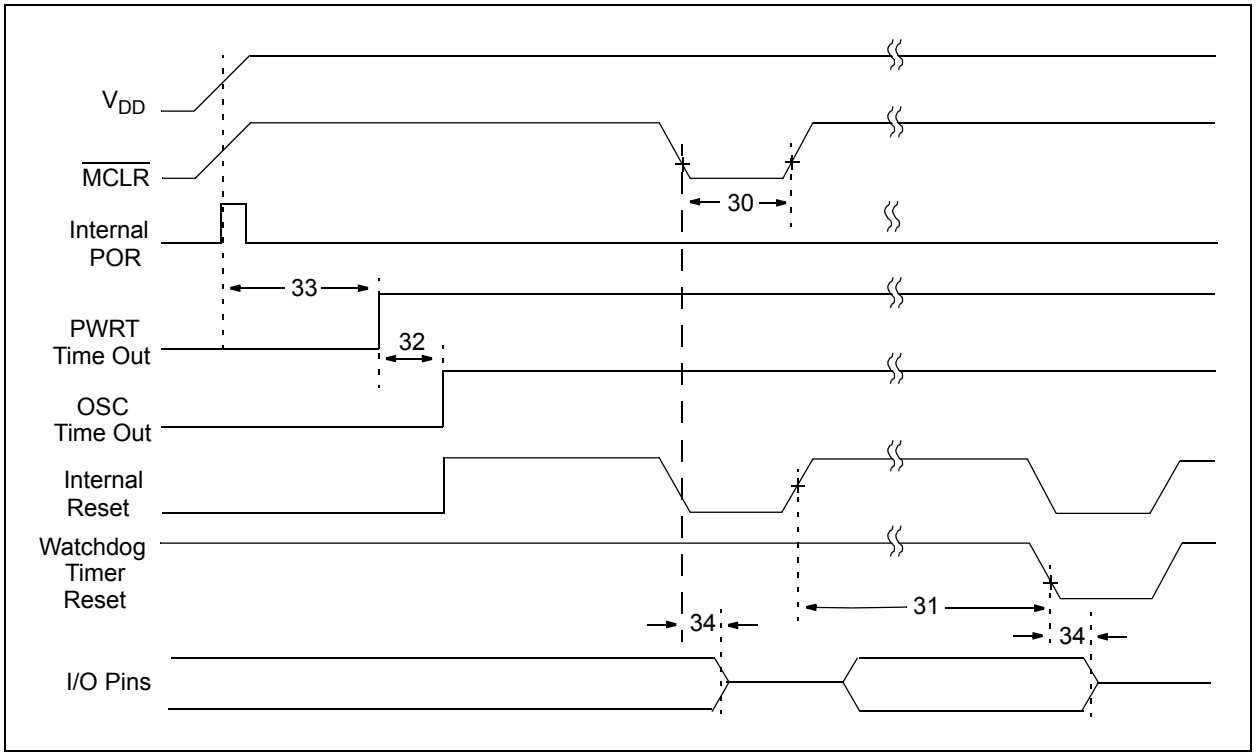

FIGURE 5-5: BROWN-OUT RESET TIMING AND CHARACTERISTICS

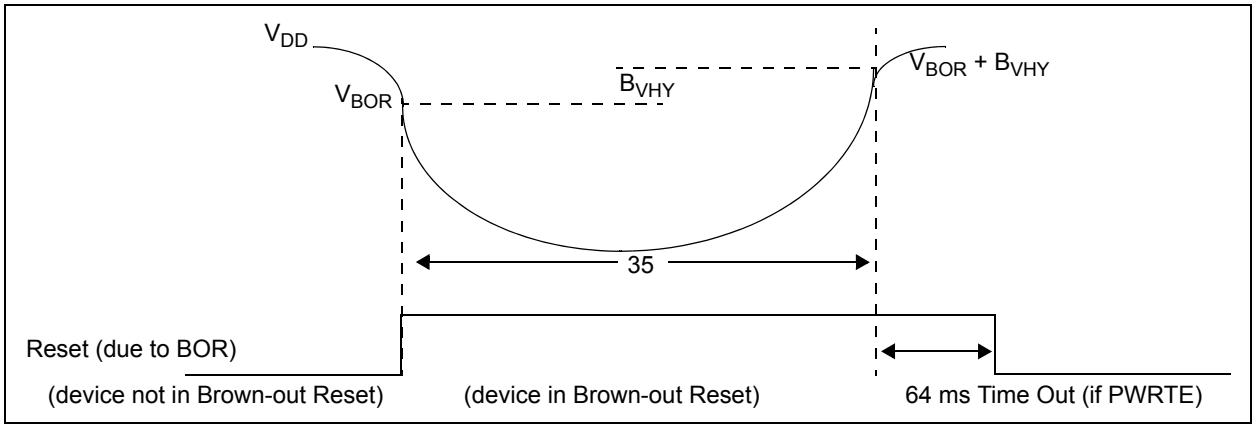

© 2015-2018 Microchip Technology Inc.

TABLE 5-3: RESET, WATCHDOG TIMER, OSCILLATOR START-UP TIMER AND POWER-UP TIMER REQUIREMENTS

Param. No.	Sym.	Characteristic	Min.	Typ.†	Max.	Units	Conditions
30	T_{MCL}	$\overline{MCLR}$ Pulse Width (low)	2	—	—	µs	V_{DD} = 5V –40°C to +85°C
31	T_{WDT}	Watchdog Timer Time-Out Period (No Prescaler)	7	18	33	ms	V_{DD} = 5V –40°C to +85°C
32	T_{OST}	Oscillation Start-Up Timer Period	—	$1024T_{OSC}$	—	—	T_{OSC} = OSC1 period
33*	T_{PWRT}	Power-up Timer Period (4 x T_{WDT})	28	72	132	ms	V_{DD} = 5V –40°C to +85°C
34	T_{IOZ}	I/O high impedance from $\overline{MCLR}$ Low or Watchdog Timer Reset	—	—	2.0	µs	
	V_{BOR}	Brown-Out Reset voltage	—	2.7	—	V	
	B_{VHY}	Brown-Out Hysteresis	—	100	—	mV	
35	T_{BCR}	Brown-Out Reset pulse width	100*	—	—	µs	$V_{DD} \leq V_{BOR}$ (D005)
48	$TCKEZ_{TMR}$	Delay from clock edge to timer increment	$2T_{OSC}$	—	$7T_{OSC}$		

* These parameters are characterized but not tested.

† Data in "Typ." column is at V_{IN} = 12V (V_{DD} = 5V, AV_{DD} = 4V), 25°C unless otherwise stated. These parameters are for design guidance only and are not tested.

FIGURE 5-6: TIMER0 AND TIMER1 EXTERNAL CLOCK TIMING

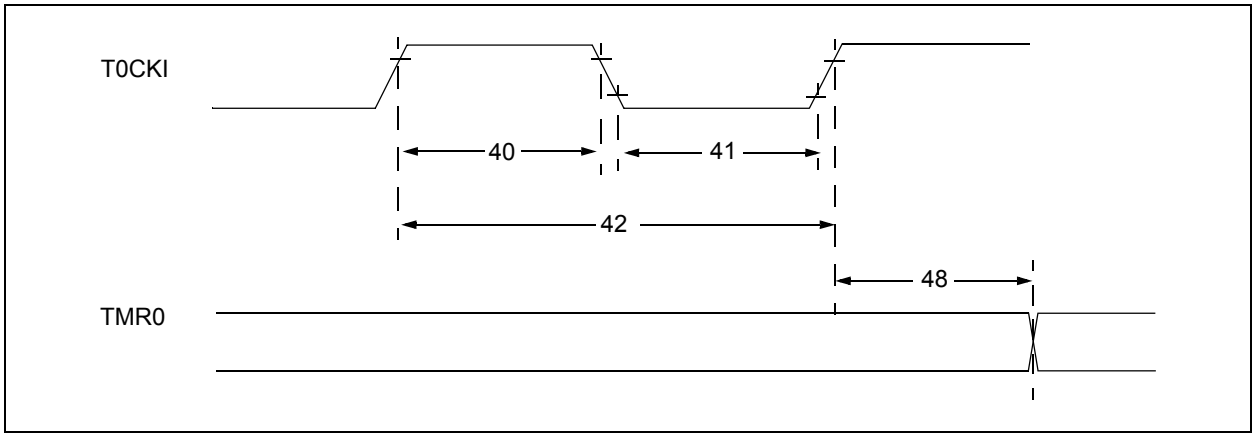

TABLE 5-4: TIMER0 EXTERNAL CLOCK REQUIREMENTS

Param. No.	Sym.	Characteristic		Min.	Typ.†	Max.	Units	Conditions
40*	Tt0H	T0CKI High Pulse Width	No Prescaler	$0.5T_{CY} + 20$	—	—	ns	
			With Prescaler	10	—	—	ns	
41*	Tt0L	T0CKI Low Pulse Width	No Prescaler	$0.5T_{CY} + 20$	—	—	ns	
			With Prescaler	10	—	—	ns	
42*	Tt0P	T0CKI Period		Greater of: 20 or $\frac{T_{CY} + 40}{N}$	—	—	ns	N = prescale value (2, 4, ..., 256)

* These parameters are characterized but not tested.

† Data in “Typ.” column is at V_{IN} = 12V, 25°C unless otherwise stated. These parameters are for design guidance only and are not tested.

FIGURE 5-7: PWM TIMINGS

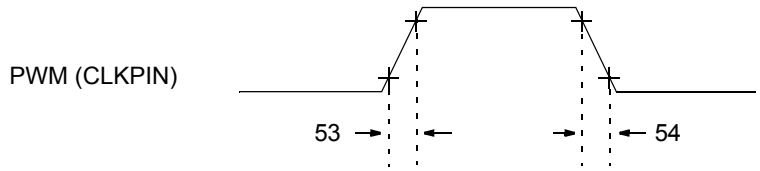

Note: Refer to Figure 5-1 for load conditions.

TABLE 5-5: PWM REQUIREMENTS

Param. No.	Sym.	Characteristic	Min.	Typ.†	Max.	Units	Conditions
53*	TccR	PWM (CLKPIN) output rise time	—	10	25	ns	
54*	TccF	PWM (CLKPIN) output fall time	—	10	25	ns	

* These parameters are characterized but not tested.

† Data in “Typ” column is at V_{IN} = 12V (AV_{DD} = 4V), 25°C unless otherwise stated. Parameters are for design guidance only and are not tested.

© 2015-2018 Microchip Technology Inc.

TABLE 5-6: MCP19116/7 A/D CONVERTER (ADC) CHARACTERISTICS (1)

Electrical Specifications: Unless otherwise noted, operating temperature = -40°C ≤ T_A ≤ +125°C							
Param. No.	**Sym.**	**Characteristic**	**Min.**	**Typ.†**	**Max.**	**Units**	**Conditions**
AD01	N_R	Resolution	—	—	10 bits	bit	
AD02	E_{IL}	Integral Error (2)	—	—	±**1**	LSb	$V_{REF_ADC} = AV_{DD}$ $V_{REF_ADC} = V_{DD}$
AD03	E_{DL}	Differential Error (2)	—	—	±**1**	LSb	No missing codes to 10 bits (3) $V_{REF_ADC} = AV_{DD}$ $V_{REF_ADC} = V_{DD}$
AD04	E_{OFF}	Offset Error (2)	—	+3.0	**+7**	LSb	$V_{REF_ADC} = AV_{DD}$ $V_{REF_ADC} = V_{DD}$
AD07	E_{GN}	Gain Error (2)	—	±2	±**6**	LSb	$V_{REF_ADC} = AV_{DD}$ $V_{REF_ADC} = V_{DD}$
AD07	V_{AIN}	Full-Scale Range	A_{GND}	—	AV_{DD}	V	AV_{DD} selected as ADC reference
			A_{GND}	—	V_{DD}	V	V_{DD} selected as ADC reference
AD08	Z_{AIN}	Recommended Impedance of Analog Voltage Source	—	—	10	kΩ	

* These parameters are characterized but not tested.

† Data in 'Typ.' column is at V_{IN} = 12V (V_{DD} = 5V, AV_{DD} = 4V), 25°C unless otherwise stated. These parameters are for design guidance only and are not tested.

Note 1: When ADC is off, it will not consume any current other than leakage current. The power-down current specification includes any such leakage from the ADC module. To minimize Sleep current, the ADC reference must be set to the default AV_{DD}.

2: Total Absolute Error includes integral, differential, offset and gain errors.

3: The A/D conversion result never decreases with an increase in the input voltage and has no missing codes.

TABLE 5-7: MCP19116/7 A/D CONVERSION REQUIREMENTS

Electrical Specifications: Unless otherwise noted, operating temperature = -40°C ≤ T_A ≤ +125°C							
Param. No.	**Sym.**	**Characteristic**	**Min.**	**Typ.†**	**Max.**	**Units**	**Conditions**
AD130*	T_{AD}	A/D Clock Period	1.6	—	9.0	μs	T_{OSC}-based
		A/D Internal RC Oscillator Period	1.6	4.0	6.0	μs	ADCS<1:0> = 11 (ADRC mode)
AD131	T_{CNV}	Conversion Time (not including Acquisition Time) (1)	—	11	—	T_{AD}	Set GO/$\overline{DONE}$ bit to new data in A/D Result registers
AD132*	T_{ACQ}	Acquisition Time	—	11.5	—	μs	
AD133*	T_{AMP}	Amplifier Settling Time	—	—	5	μs	
AD134	T_{GO}	Q4 to A/D Clock Start	—	$T_{OSC}/2$	—	—	

† Data in 'Typ.' column is at V_{IN} = 12V (V_{DD} = 5V, AV_{DD} = 4V), 25°C unless otherwise stated. These parameters are for design guidance only and are not tested.

* These parameters are characterized but not tested.

Note 1: ADRESH and ADRESL registers may be read on the following T_{CY} cycle.

FIGURE 5-8: A/D CONVERSION TIMING

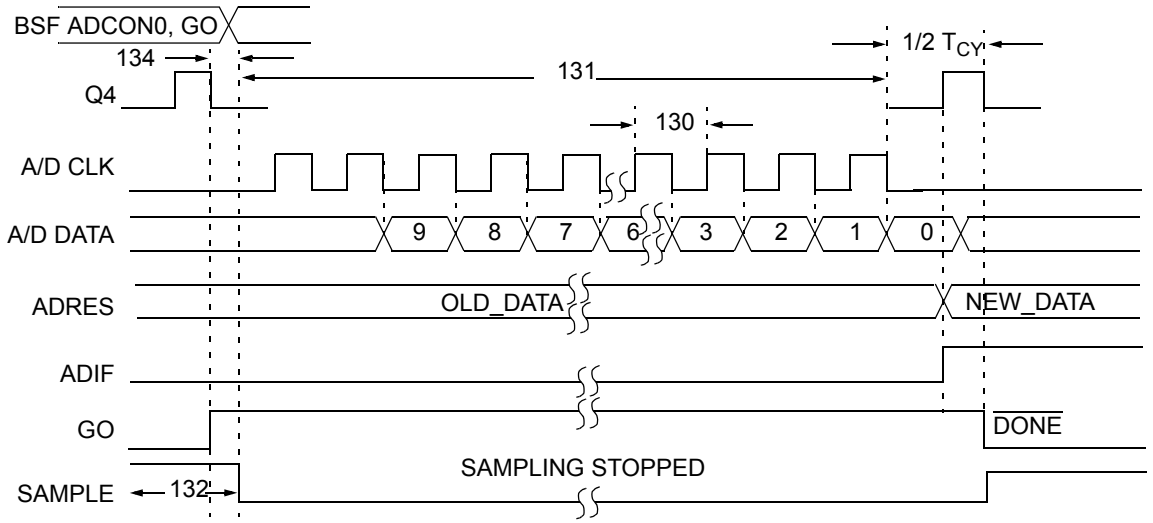

Note 1: If the A/D clock source is selected as RC, a time of T_{CY} is added before the A/D clock starts. This allows the SLEEP instruction to be executed.

© 2015-2018 Microchip Technology Inc.

6.0 CONFIGURING THE MCP19116/7

The MCP19116/7 devices are analog controllers with a digital peripheral. This means that device configuration is handled through register settings instead of adding external components. There are several internal configurable comparator modules used to interface analog circuits to digital processing that are very similar to a standard comparator module found in many PIC processors today (i.e., PIC16F1824/1828). The following sections detail how to set the analog control registers for all the configurable parameters.

6.1 Input Undervoltage and Overvoltage Lockout (UVLO and OVLO)

VINCON is the comparator control register for both the VINUVLO and VINOVLO registers. It contains the enable bits, the polarity edge detection bits and the status output bits for both protection circuits. The interrupt flags <UVLOIF> and <OVLOIF> in the PIR2 register are independent of the enable <UVLOEN> and <OVLOEN> bits in the VINCON register. The <UVLOOUT> Undervoltage Lockout Status Output bit in the VINCON register indicates if an UVLO event has occurred. The <OVLOOUT> Overvoltage Lockout Status Output bit in the VINCON register indicates if an OVLO event has occurred.

The VINUVLO register contains the digital value that sets the input undervoltage lockout. UVLO has a range of 4V to 20V. For V_{IN} values below this range and above processor come-alive (V_{DD} = 2V), the UVLO comparator and the UVLOOUT Status bit will indicate an undervoltage condition. If using UVLO to determine power-up V_{IN}, it is recommended to poll the UVLOOUT bit for status. When the input voltage on the V_{IN} pin to the MCP19116/7 is below this programmed level and the <UVLOEN> bit in the VINCON register is set, both PDRV and SDRV gate drivers are disabled. This bit is automatically cleared when the MCP19116/7 V_{IN} voltage rises above this programmed level.

The VINOVLO register contains the digital value that sets the input overvoltage lockout. OVLO has a range of 8.8V to 44V. When the input voltage on the V_{IN} pin to the MCP19116/7 is above this programmed level and the <OVLOEN> bit in the VINCON register is set, both PDRV and SDRV gate drivers are disabled. This bit is automatically cleared when the MCP19116/7 V_{IN} voltage drops below this programmed level.

Note:	The UVLOIF and OVLOIF interrupt flag bits are set when an interrupt condition occurs, regardless of the state of its corresponding enable bit or the Global Enable bit (GIE) in the INTCON register.

REGISTER 6-1: VINCON: UVLO AND OVLO COMPARATOR CONTROL REGISTER

R/W-0	R-0	R/W-0	R/W-0	R/W-0	R-0	R/W-0	R/W-0
UVLOEN	UVLOOUT	UVLOINTP	UVLOINTN	OVLOEN	OVLOOUT	OVLOINTP	OVLOINTN
bit 7							bit 0

Legend:		
R = Readable bit	W = Writable bit	U = Unimplemented bit, read as ‘0’
u = Bit is unchanged	x = Bit is unknown	-n = Value at POR
‘1’ = Bit is set	‘0’ = Bit is cleared	

bit 7 **UVLOEN:** UVLO Comparator Module Logic Enable bit
1 = UVLO Comparator Module Logic enabled
0 = UVLO Comparator Module Logic disabled

bit 6 **UVLOOUT:** Undervoltage Lockout Status Output
1 = UVLO event has occurred
0 = No UVLO event has occurred

bit 5 **UVLOINTP:** UVLO Comparator Interrupt on Positive Going Edge Enable bit
1 = The UVLOIF interrupt flag will be set upon a positive going edge of the UVLO
0 = No UVLOIF interrupt flag will be set upon a positive going edge of the UVLO

bit 4 **UVLOINTN:** UVLO Comparator Interrupt on Negative Going Edge Enable bit
1 = The UVLOIF interrupt flag will be set upon a negative going edge of the UVLO
0 = No UVLOIF interrupt flag will be set upon a negative going edge of the UVLO

REGISTER 6-1: VINCON: UVLO AND OVLO COMPARATOR CONTROL REGISTER (CONTINUED)

bit 3 **OVLOEN:** OVLO Comparator Module Logic enable bit
1 = OVLO Comparator Module Logic enabled
0 = OVLO Comparator Module Logic disabled

bit 2 **OVLOOUT:** Overvoltage Lockout Status Output bit
1 = OVLO event has occurred
0 = No OVLO event has occurred

bit 1 **OVLOINTP:** OVLO Comparator Interrupt on Positive Going Edge Enable bit
1 = The OVLOIF interrupt flag will be set upon a positive going edge of the OVLO
0 = No OVLOIF interrupt flag will be set upon a positive going edge of the OVLO

bit 0 **OVLOINTN:** OVLO Comparator Interrupt on Negative Going Edge Enable bit
1 = The OVLOIF interrupt flag will be set upon a negative going edge of the OVLO
0 = No OVLOIF interrupt flag will be set upon a negative going edge of the OVLO

REGISTER 6-2: VINUVLO: INPUT UNDERVOLTAGE LOCKOUT REGISTER

U-0	U-0	R/W-x	R/W-x	R/W-x	R/W-x	R/W-x	R/W-x
—	—	UVLO5	UVLO4	UVLO3	UVLO2	UVLO1	UVLO0
bit 7							bit 0

Legend:		
R = Readable bit	W = Writable bit	U = Unimplemented bit, read as ‘0’
u = Bit is unchanged	x = Bit is unknown	-n = Value at POR
‘1’ = Bit is set	‘0’ = Bit is cleared	

bit 7-6 **Unimplemented:** Read as ‘0’

bit 5-0 **UVLO<5:0>:** Undervoltage Lockout Configuration bits
UVLO(V) = 3.5472 * (1.0285^N) where N = the decimal value written to the VINUVLO Register from 0 to 63

REGISTER 6-3: VINOVLO: INPUT OVERVOLTAGE LOCKOUT REGISTER

U-0	U-0	R/W-x	R/W-x	R/W-x	R/W-x	R/W-x	R/W-x
—	—	OVLO5	OVLO4	OVLO3	OVLO2	OVLO1	OVLO0
bit 7							bit 0

Legend:		
R = Readable bit	W = Writable bit	U = Unimplemented bit, read as ‘0’
u = Bit is unchanged	x = Bit is unknown	-n = Value at POR
‘1’ = Bit is set	‘0’ = Bit is cleared	

bit 7-6 **Unimplemented:** Read as ‘0’

bit 5-0 **OVLO<5:0>:** Overvoltage Lockout Configuration bits
OVLO(V) = 7.4847 * (1.0286^N) where N = the decimal value written to the VINOVLO Register from 0 to 63

© 2015-2018 Microchip Technology Inc.

6.2 Output Overvoltage Protection

The MCP19116/7 devices feature output overvoltage protection. This feature also utilizes a comparator module similar to the standard PIC comparator module. This is used to prevent the power system from being damaged when the load is disconnected. The OVREFCON register contains the digital value that sets the analog DAC voltage at the inverting input of the comparator. By comparing the divided down power train output voltage connected to the noninverting input (V_S) of the comparator with the OVREF reference voltage, the user can determine when an overvoltage event has occurred and can automatically take action.

The OVCON register contains the interrupt flag polarity and OV enable bits along with the Output Status bit just as VINCON does for the input voltage UVLO and OVLO. When <OVEN> bit in the OVCON register is set and an overvoltage occurs, the control logic automatically sets the secondary gate drive output (SDRV) high and the primary gate drive output (PDRV) low.

Note: The OVIF Interrupt Flag bit is set when an interrupt condition occurs, regardless of the state of its corresponding enable bit or the Global Enable bit (GIE) in the INTCON register.

REGISTER 6-4: OVCON: OUTPUT OVERVOLTAGE COMPARATOR CONTROL REGISTER

U-0	U-0	U-0	U-0	R/W-0	R-0	R/W-0	R/W-0
—	—	—	—	OVEN	OVOUT	OVINTP	OVINTN
bit 7							bit 0

Legend:		
R = Readable bit	W = Writable bit	U = Unimplemented bit, read as ‘0’
u = Bit is unchanged	x = Bit is unknown	-n = Value at POR
‘1’ = Bit is set	‘0’ = Bit is cleared	

bit 7-4 **Unimplemented:** Read as ‘0’

bit 3 **OVEN:** OV Comparator Output Enable bit
1 = OV Comparator output is enabled
0 = OV Comparator output is not enabled

bit 2 **OVOUT:** Output Overvoltage Status Output bit
1 = Output Overvoltage has occurred
0 = No Output Overvoltage has occurred

bit 1 **OVINTP:** OV Comparator Interrupt on Positive Going Edge Enable bit
1 = The OVIF interrupt flag will be set upon a positive going edge of the OV
0 = No OVIF interrupt flag will be set upon a positive going edge of the OV

bit 0 **OVINTN:** OV Comparator Interrupt on Negative Going Edge Enable bit
1 = The OVIF interrupt flag will be set upon a negative going edge of the OV
0 = No OVIF interrupt flag will be set upon a negative going edge of the OV

REGISTER 6-5: OVREFCON: OUTPUT OVERVOLTAGE DETECT LEVEL REGISTER

R/W-x	R/W-x	R/W-x	R/W-x	R/W-x	R/W-x	R/W-x	R/W-x
OOV7	OOV6	OOV5	OOV4	OOV3	OOV2	OOV1	OOV0
bit 7							bit 0

Legend:		
R = Readable bit	W = Writable bit	U = Unimplemented bit, read as ‘0’
u = Bit is unchanged	x = Bit is unknown	-n = Value at POR
‘1’ = Bit is set	‘0’ = Bit is cleared	

bit 7-0 **OOV<7:0>:** Output Overvoltage Detect Level Configuration bits

$V_{OV_REF(V)} = 2 * V_{BG} * N/255$ where N is the decimal value written to the OVREFCON Register <OOV7:OOV0> from 0 to 255.

© 2015-2018 Microchip Technology Inc.

6.3 Desaturation Detection for Quasi-Resonant Operation

The MCP19116/7 have been designed with a built-in desaturation detection comparator module custom made for quasi-resonant topologies. This is especially useful for LED-type applications. Through the use of the MCP19116/7, both synchronous and asynchronous quasi-resonant topologies can be implemented. The DESAT comparator module has the same features as the UVLO/OVLO and OV comparator modules, except that it includes some additional programmable parameters.

The DESATCON register holds the setup control bits for this module. Common control bits are the polarity edge trigger for the interrupt flag <CDSINTP><CDSINTN>, comparator output polarity control <CDSPOL>, output enable <CDSOE> and output status <CDSOUT> bits. As with the other comparator modules, the CDSIF is independent of the CDSOE enable bit. On the front end connected to the DESAT comparator non-inverting input, there is a two-channel MUX that connects either to the $DESAT_P$ pin or to the fixed internally generated band gap voltage. Additionally, the input offset voltage of the DESAT comparator is factory-trimmed to within ±1 mV typically. These factory-trimmed values are stored in the CALWD2 register at address 2081h. Firmware must read these values into the DSTCAL register (196h). If more offset is desired, the user can adjust the values written to the DSTCAL per their implementation.

REGISTER 6-6: DESATCON: DESATURATION COMPARATOR CONTROL REGISTER

R/W-0	R/W-0	R/W-0	R/W-0	R/W-0	R/W-0	R/W-0	R/W-0
CDSMUX	CDSWDE	Reserved	CDSPOL	CDSOE	CDSOUT	CDSINTP	CDSINTN
bit 7							bit 0

Legend:		
R = Readable bit	W = Writable bit	U = Unimplemented bit, read as ‘0’
u = Bit is unchanged	x = Bit is unknown	-n = Value at POR
‘1’ = Bit is set	‘0’ = Bit is cleared	

bit 7 **CDSMUX:** DESAT Comparator Module Multiplexer Channel Selection bit
1 = BG Selected
0 = $DESAT_P$ Selected **(Default)**

bit 6 **CDSWDE:** DESAT Comparator Watch Dog Enable bit
1 = Watch Dog signal enables PWM Reset
0 = Watch Dog signal does not allow PWM reset

bit 5 Reserved

bit 4 **CDSPOL:** DESAT Comparator Polarity Select bit
1 = DESAT Comparator output is inverted
0 = DESAT Comparator output is not inverted

bit 3 **CDSOE:** DESAT Comparator output enable bit
1 = DESAT Comparator output PWM is enabled
0 = DESAT Comparator output PWM is not enabled

bit 2 **CDSOUT**: DESAT Comparator Output Status bit
<u>If CDSPOL = 1 (inverted polarity)</u>
1 = CDSVP < CDSVN (DESAT detected)
0 = CDSVP > CDSVN (DESAT not detected)
<u>If CDSPOL = 0 (non-inverted polarity)</u>
1 = CDSVP > CDSVN (DESAT not detected)
0 = CDSVP < CDSVN (DESAT detected)

bit 1 **CDSINTP:** CDSIF Comparator Interrupt on Positive Going Edge Enable bit
1 = The CDSIF interrupt flag will be set upon a positive going edge
0 = No CDSIF interrupt flag will be set upon a positive going edge

bit 0 **CDSINTN:** CDSIF Comparator Interrupt on Negative Going Edge Enable bit
1 = The CDSIF interrupt flag will be set upon a negative going edge
0 = No CDSIF interrupt flag will be set upon a negative going edge

6.4 Primary Input Current Offset Adjust

Primary input current offset adjust provides the ability to add offset to the primary input current signal, thus setting a peak primary current limit. This offset adjust is controlled by means of the four bits in the ICOACON register.

REGISTER 6-7: ICOACON: INPUT CURRENT OFFSET ADJUST CONTROL REGISTER

U-0	U-0	U-0	U-0	R/W-x	R/W-x	R/W-x	R/W-x
—	—	—	—	ICOAC3	ICOAC2	ICOAC1	ICOAC0
bit 7							bit 0

Legend:		
R = Readable bit	W = Writable bit	U = Unimplemented bit, read as ‘0’
u = Bit is unchanged	x = Bit is unknown	-n = Value at POR
‘1’ = Bit is set	‘0’ = Bit is cleared	

bit 7-4 **Unimplemented:** Read as ‘0’

bit 3-0 **ICOAC<3:0>:** Input Current Offset Adjustment Configuration bits

0000 = 0 mV
0001 = 50 mV
0010 = 100 mV
0011 = 150 mV
0100 = 200 mV
0101 = 250 mV
0110 = 300 mV
0111 = 350 mV
1000 = 400 mV
1001 = 450 mV
1010 = 500 mV
1011 = 550 mV
1100 = 600 mV
1101 = 650 mV
1110 = 700 mV
1111 = 750 mV

© 2015-2018 Microchip Technology Inc.

6.5 Leading Edge Blanking

The adjustable Leading Edge Blanking (LEB) is used to blank primary current spikes resulting from primary switch turn-on. Implementing adjustable LEB allows the system to ignore turn-on noise to best suit the application without primary current sense distortion from RC filtering. There are four settings available for LEB, including zero. These settings are controlled via two bits in the ICLEBCON register.

REGISTER 6-8: ICLEBCON: INPUT CURRENT LEADING EDGE BLANKING CONTROL REGISTER

U-0	U-0	U-0	U-0	U-0	U-0	R/W-x	R/W-x
—	—	—	—	—	—	ICLEBC1	ICLEBC0
bit 7							bit 0

Legend:		
R = Readable bit	W = Writable bit	U = Unimplemented bit, read as ‘0’
u = Bit is unchanged	x = Bit is unknown	-n = Value at POR
‘1’ = Bit is set	‘0’ = Bit is cleared	

bit 7-2 **Unimplemented:** Read as ‘0’

bit 1-0 **ICLEBC<1:0>:** Input current Leading Edge Blanking Configuration bits

00 = 0 ns
01 = 50 ns
10 = 100 ns
11 = 200 ns

6.6 Slope Compensation

A negative voltage slope is added to the output of the error amplifier. This is done to prevent subharmonic instability when:

1. the operating duty cycle is greater than 50%
2. wide changes in duty cycle occur

The amount of negative slope added to the error amplifier output is controlled by the slope compensation slew rate control bits.

The slope compensation is enabled by clearing the SLPBY bit in the SLPCRCON register.

REGISTER 6-9: SLPCRCON: SLOPE COMPENSATION RAMP CONTROL REGISTER

U-0	R/W-0	R/W-x	R/W-x	R/W-x	R/W-x	R/W-x	R/W-x
—	SLPBY	SLPS5	SLPS4	SLPS3	SLPS2	SLPS1	SLPS0
bit 7							bit 0

Legend:		
R = Readable bit	W = Writable bit	U = Unimplemented bit, read as ‘0’
u = Bit is unchanged	x = Bit is unknown	-n = Value at POR
‘1’ = Bit is set	‘0’ = Bit is cleared	

bit 7 **Unimplemented:** Read as ‘0’

bit 6 **SLPBY:** Slope Compensation Bypass Control bit
1 = Slope compensation is bypassed
0 = Slope compensation is not bypassed **(Default)**

bit 5-0 **SLPS<5:0>:** Slope Compensation Slew Rate Control bits
SLPS (mV/µs) = $4.5 * 1.08^N$ where N is the decimal value written to the SLPCRCON Register <SLPS5:SLPS0> from 0 to 63.

© 2015-2018 Microchip Technology Inc.

6.7 MOSFET Driver Programmable Dead Time

The turn-on dead time of both PDRV and SDRV low-side drive signals can be configured independently to allow different MOSFETs and circuit board layouts to be used to construct an optimized system (refer to Figure 6-1).

Clearing the PDRVBY and SDRVBY bits in the PE1 register enables the PDRV and SDRV low-side dead timers, respectively. The amount of dead time added is controlled in the DEADCON register.

FIGURE 6-1: MOSFET DRIVER DEAD TIME

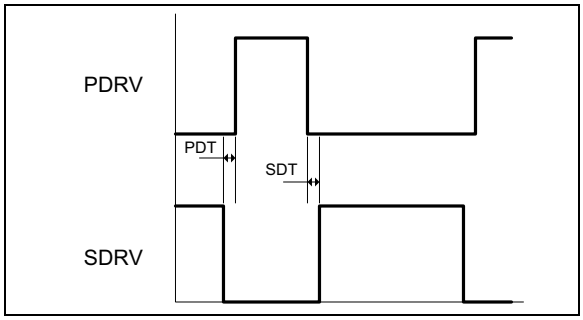

REGISTER 6-10: DEADCON: DRIVER DEAD TIME CONTROL REGISTER

R/W-x	R/W-x	R/W-x	R/W-x	R/W-x	R/W-x	R/W-x	R/W-x
PDRVDT3	PDRVDT2	PDRVDT1	PDRVDT0	SDRVDT3	SDRVDT2	SDRVDT1	SDRVDT0
bit 7							bit 0

Legend:		
R = Readable bit	W = Writable bit	U = Unimplemented bit, read as ‘0’
u = Bit is unchanged	x = Bit is unknown	-n = Value at POR
‘1’ = Bit is set	‘0’ = Bit is cleared	

bit 7-4 **PDRVDT<3:0>:** PDRV Dead Time Configuration bits (t_{TD_1})

`0000` = 16 ns delay
`0001` = 32 ns delay
`0010` = 48 ns delay
`0011` = 64 ns delay
`0100` = 80 ns delay
`0101` = 96 ns delay
`0110` = 112 ns delay
`0111` = 128 ns delay
`1000` = 144 ns delay
`1001` = 160 ns delay
`1010` = 176 ns delay
`1011` = 192 ns delay
`1100` = 208 ns delay
`1101` = 224 ns delay
`1110` = 240 ns delay
`1111` = 256 ns delay

© 2015-2018 Microchip Technology Inc.

REGISTER 6-10: DEADCON: DRIVER DEAD TIME CONTROL REGISTER (CONTINUED)

bit 3-0 **SDRVDT<3:0>:** SDRV Dead Time Configuration bits (t_{TD_2})

0000 = 16 ns delay
0001 = 32 ns delay
0010 = 48 ns delay
0011 = 64 ns delay
0100 = 80 ns delay
0101 = 96 ns delay
0110 = 112 ns delay
0111 = 128 ns delay
1000 = 144 ns delay
1001 = 160 ns delay
1010 = 176 ns delay
1011 = 192 ns delay
1100 = 208 ns delay
1101 = 224 ns delay
1110 = 240 ns delay
1111 = 256 ns delay

6.8 Output Regulation Reference Voltage Configuration

The VREFCON register controls the error amplifier reference voltage. This reference is used to set the current or voltage regulation set point. VREFCON holds the digital value used by an 8-bit linear DAC, setting the analog equivalent that gets summed with the pedestal voltage (VZC) at the noninverting node of the error amplifier. VZC is equal to the band gap voltage (1.23V). The output of the current sense amplifier A2 is also raised on the pedestal voltage, effectively canceling its effect on the input. The pedestal is implemented throughout the analog control loop to improve accuracy at low levels. The V_{REF} DAC can be adjusted in 255 steps of 4.8 mV/step.

REGISTER 6-11: VREFCON: CURRENT/VOLTAGE REGULATION SET POINT CONTROL REGISTER

R/W-0	R/W-0	R/W-0	R/W-0	R/W-0	R/W-0	R/W-0	R/W-0
VREF7	VREF6	VREF5	VREF4	VREF3	VREF2	VREF1	VREF0
bit 7							bit 0

Legend:		
R = Readable bit	W = Writable bit	U = Unimplemented bit, read as ‘0’
u = Bit is unchanged	x = Bit is unknown	-n = Value at POR
‘1’ = Bit is set	‘0’ = Bit is cleared	

bit 7-0 **VREF<7:0>:** Voltage-Controlling Current Regulation Set Point bits

$V_{REF(V)} = V_{BG} * N/255$ where N is the decimal value written to the VREFCON Register <VREF7:VREF0> from 0 to 255

© 2015-2018 Microchip Technology Inc.

6.9 V_{REF2} Voltage Reference

The VREF2CON register controls a second reference DAC that can be used externally. For example, it can be sent off-chip and used to set the current regulation set point for a MCP1631 Pulse-Width Modulator. The MCP19116/7 must be configured in Master Mode with bits MSC<0:1> = 01 in the MODECON register to connect V_{REF2} to GPB1. In Stand-Alone mode, V_{REF2} is not accessible. VREFCON2 holds the digital value used to set the VREF2 DAC. Since this reference is intended to go off-chip, there is no pedestal offset associated with it and it is referenced to GND. It is an 8-bit linear DAC and has a range from 0V to 1.23V (BG) equating to 255 steps at 4.8 mV/step.

REGISTER 6-12: VREF2CON: V_{REF2} VOLTAGE SET POINT REGISTER

R/W-0	R/W-0	R/W-0	R/W-0	R/W-0	R/W-0	R/W-0	R/W-0
VREF27	VREF26	VREF25	VREF24	VREF23	VREF22	VREF21	VREF20
bit 7							bit 0

Legend:		
R = Readable bit	W = Writable bit	U = Unimplemented bit, read as ‘0’
u = Bit is unchanged	x = Bit is unknown	-n = Value at POR
‘1’ = Bit is set	‘0’ = Bit is cleared	

bit 7-0 **VREF2<7:0>:** Voltage Controlling Current Regulation Set Point bits
$V_{REF2(V)} = V_{BG} * N/255$ where N is the decimal value written to the VREF2CON Register <VREF27:VREF20> from 0 to 255

6.10 Analog Peripheral Control

The MCP19116/7 devices have several analog peripherals, such as the PDRV and SDRV peripherals, and a weak pull-up on the I_{SP} input.

PDRV and SDRV peripherals are enabled using single bits, PDRVEN and SDRVEN. The weak pull-up on the I_{SP} input is enabled using the ISPUEN bit.

These peripherals can be configured to allow customizable operation. Refer to Register 6-13 for more information.

6.10.1 MOSFET GATE DRIVER ENABLES

The MCP19116/7 can enable and/or disable the MOSFET gate driver outputs for the primary drive (PDRV) and the secondary drive (SDRV) independently. Setting the <PDRVEN> bit in the PE1 register enables the primary drive. Setting the <SDRVEN> bit in the PE1 register enables the secondary drive. Refer to Register 6-13 for details.

6.10.2 MOSFET DRIVER DEAD TIME

The MOSFET drive dead time can be adjusted as described in **Section 6.7 “MOSFET Driver Programmable Dead Time”**. The dead time can be set independently for each driver from 16 ns to 256 ns in increments of 16 ns using the DEADCON register. Dead time can also be disabled for each driver independently by setting the bypass bits <PDRVBY> and <SDRVBY> in the PE1 register.

6.10.3 SECONDARY CURRENT POSITIVE SENSE PULL-UP

A high-impedance pull-up on the I_{SP} pin can be configured by setting the <ISPUEN> bit in the PE1 register. When set, the I_{SP} pin is internally pulled-up to V_{DD}. Refer to Register 6-13 for details.

6.10.4 PWM STEERING

The MCP19116/7 devices have additional control circuitry to allow open-loop repositioning of the output. The PWMSTR_PEN bit enables a primary-only PWM signal of fixed frequency and duty cycle to reposition the output voltage up. The PWMSTR_SEN bit enables a secondary-only PWM signal of fixed frequency and duty cycle to reposition the output voltage down. When repositioning output voltage down, the output overvoltage protection must be active along with PWMSTR_SEN for the PWM to pulse the SDRV. Frequency and duty cycle are controlled through TMR2 registers PR2 and TMR1L. PWMSTPR_PEN and PWMSTR_SEN should never be active at the same time, therefore PWMSTPR_PEN is the dominant bit. For quasi-resonant operation during open-loop repositioning, the DESAT comparator output should be disabled with the <CDSOE> bit in the DEADCON register.

REGISTER 6-13: PE1: ANALOG PERIPHERAL ENABLE1 CONTROL REGISTER

R/W-0	R/W-0	R/W-0	R/W-0	U-0	R/W-0	R/W-0	R/W-0
PDRVEN	SDRVEN	PDRVBY	SDRVBY	—	ISPUEN	PWMSTR_PEN	PWMSTR_SEN
bit 7							bit 0

Legend:		
R = Readable bit	W = Writable bit	U = Unimplemented bit, read as ‘0’
u = Bit is unchanged	x = Bit is unknown	-n = Value at POR
‘1’ = Bit is set	‘0’ = Bit is cleared	

bit 7 **PDRVEN:** PDRV Gate Drive Enable bit
1 = PDRV gate drive is enabled
0 = PDRV gate drive is disabled

bit 6 **SDRVEN:** SDRV Gate Drive Enable bit
1 = SDRV gate drive is enabled
0 = SDRV gate drive is disabled

bit 5 **PDRVBY:** PDRV Dead Time Bypass bit
1 = PDRV dead time is bypassed
0 = PDRV dead time is not bypassed

bit 4 **SDRVBY:** SDRV Dead Time Bypass bit
1 = SDRV dead time is bypassed
0 = SDRV dead time is not bypassed.

bit 3 **Unimplemented:** Read as ‘0’

bit 2 **ISPUEN:** I_{SP} Weak Pull-Up Enable bit
1 = I_{SP} weak pull-up is enabled
0 = I_{SP} weak pull-up is disabled

bit 1 **PWMSTR_PEN:** PDRV PWM Steering bit
1 = Enables open-loop PWM control to the PDRV
0 = Disables open-loop PWM control to the PDRV

bit 0 **PWMSTR_SEN:** SDRV PWM Steering bit
1 = Enables open-loop PWM control to the SDRV
0 = Disables open-loop PWM control to the SDRV

6.11 Analog and Digital Test Signal Enable and Control

Various analog and digital test signals can be enabled or disabled, as shown in Register 6-14. These signals can be configured to GPA0. Setting the <DIGOEN> bit enables the digital test signals to be connected to GPA0. <DSEL2:0> selects the digital channels. Setting <ANAOEN> enables the analog test signals to be connected to GPA0. If <ANAOEN> and <DIGOEN> both get set, the DIGOEN bit takes priority. When ANAOEN is set and DIGOEN is not set, the analog test signals are connected to the internal ADC. The analog test channel selections are controlled through the ADCON0 register.

6.11.1 MOSFET DRIVER UNDERVOLTAGE LOCKOUT SELECTION

The MOSFET gate drivers have internal undervoltage protection that is controlled by the <DRUVSEL> bit in Register 6-14. Since the gate drive supply is provided externally through the V_{DR} pin, the drivers are capable of driving logic level FETs or higher 10V (13.5V maximum) FETs. <DRUVSEL> defaults to clear, therefore selecting a gate drive UVLO of 2.7V. Setting <DRUVSEL> selects the higher 5.4V gate drive UVLO. Refer to **Section 4.2 “Electrical Characteristics”** for additional electrical specifications.

© 2015-2018 Microchip Technology Inc.

6.11.2 ERROR AMPLIFIER DISABLE

The error amplifier can be disabled such that its output is parked to a known state. The <EADIS> bit defaults to zero and the error amp is enabled during normal operation. In case the user wants to disable the error amplifier, setting the EADIS bit parks the error amplifier output to just below the low clamp voltage. Under normal operation, the error amplifier output runs between 2 * BG (upper clamp value) and 1 * BG – 150 mV (lower clamp value). The analog feedback circuitry utilizes an offset pedestal (1 * BG) to improve accuracy at low levels.

REGISTER 6-14: ABECON: ANALOG BLOCK ENABLE CONTROL REGISTER

R/W-0	R/W-0	R/W-0	R/W-0	R/W-0	U-0	R/W-0	R/W-0
DIGOEN	DSEL2	DSEL1	DSEL0	DRUVSEL	—	EADIS	ANAOEN
bit 7							bit 0

Legend:		
R = Readable bit	W = Writable bit	U = Unimplemented bit, read as ‘0’
u = Bit is unchanged	x = Bit is unknown	-n = Value at POR
‘1’ = Bit is set	‘0’ = Bit is cleared	

bit 7 **DIGOEN:** DIG Test MUX to GPA0 connection control
`1` = DIG Test MUX output is connected to external pin GPA0
`0` = DIG Test MUX output is not connected to external pin GPA0

bit 6-4 **DSEL<2:0>** Digital Test Signals
`000` = QRS (output of DESAT comparator)
`001` = PWM_L (PWM output after monostable)
`010` = PWM (oscillator output from the microcontroller)
`011` = TMR2EQ (when TMR2 equals PR2)
`100` = OV (overvoltage comparator output)
`101` = SWFRQ (switching frequency output)
`110` = SDRV_ON_ONESHOT (200 ns one-shot signal to reset WDM logic)
`111` = Unimplemented

bit 3 **DRUVSEL**: Selects gate drive undervoltage lockout level
`1` = Gate Drive UVLO set to 5.4V
`0` = Gate Drive UVLO set to 2.7V

bit 2 **Unimplemented:** Read as ‘`0`’

bit 1 **EADIS:** Error Amplifier Disable bit
`1` = Disables the error amplifier (Output parked low, clamped to 1 * BG)
`0` = Enables the error amplifier (Normal operation)

bit 0 **ANAOEN:** Analog MUX Output Control bit
`1` = Analog MUX output is connected to external pin GPA0
`0` = Analog MUX output is not connected to external pin GPA0

6.12 Mode and RFB MUX Control

The MODECON register controls the Master/Slave configuration and the internal resistor feedback MUX for the current sense amplifier while in quasi-resonant mode.

In Master mode, it allows the V_{REF2} signal of the Master MCP19116/7 device to be buffered and connected to a GPIO pin. This output signal can be connected to a Slave PWM driver (MCP1631) at the V_{REF} input to regulate current via the Slave PWM Controller. In Master mode, the CLKOUT sync signal is routed to GPA1. In Semi-Master Mode, users have the option to implement V_{REF2} and CLKOUT independently. In Stand-Alone mode, the V_{REF2} unity gain buffer and CLKOUT signals are not connected to GPIO Pins.

The RFB MUX selects the output of A2 current sense amplifier to be connected to the internal 5 kΩ feedback resistor or to the I_{SOUT} pin.

REGISTER 6-15: MODECON: MASTER/SLAVE AND RFB MUX CONTROL REGISTER

R/W-0	R/W-0	R/W-0	U-0	R/W-0	U-0	U-0	U-0
MSC1	MSC0	RFB	—	MSC2	—	—	—
bit 7							bit 0

Legend:		
R = Readable bit	W = Writable bit	U = Unimplemented bit, read as ‘0’
u = Bit is unchanged	x = Bit is unknown	-n = Value at POR
‘1’ = Bit is set	‘0’ = Bit is cleared	

bit 7-6 **MSC<1:0>:** Master/Slave Configuration bits
- 00 = Device set as stand-alone unit (VREF2 disabled, Switching frequency internally generated)
- 01 = Device set as MASTER (VREF2 to GPB1, CLKOUT sync to GPA1)
- 10 = Device set as SLAVE MODE (CLKIN switching frequency sync signal to GPA1)
- 11 = Device set to SEMI-MASTER MODE

bit 5 **RFB:** Current Sense Amplifier (A2) Output Resistor Feedback MUX Configuration bit
- 0 = R_{FB_INT} 5 kΩ
- 1 = I_{SOUT}

bit 4 **Unimplemented:** Read as ‘0’

bit 3 **MSC<2>:** Semi-Master mode options
- 0 = GPB1 is VREF2 Output, GPA1 is general purpose I/O
- 1 = GPB1 is general purpose output, GPA1 is CLKOUT

bit 2-0 **Unimplemented:** Read as ‘0’

© 2015-2018 Microchip Technology Inc.

7.0 TYPICAL PERFORMANCE CURVES

Note: The graphs and tables provided following this note are a statistical summary based on a limited number of samples and are provided for informational purposes only. The performance characteristics listed herein are not tested or guaranteed. In some graphs or tables, the data presented may be outside the specified operating range (e.g., outside specified power supply range) and therefore, outside the warranted range.

Note: Unless otherwise indicated, V_{IN} = 12V, F_{SW} = 150 kHz, T_A = +25°C.

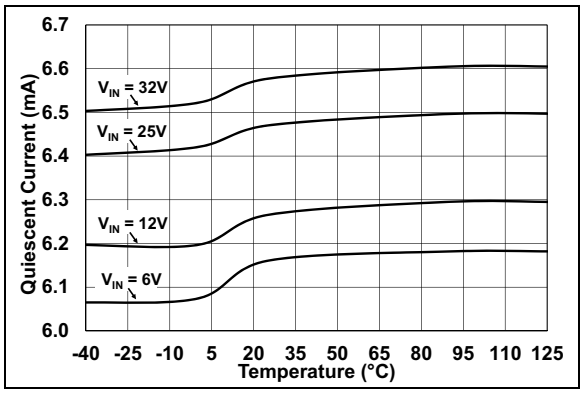

FIGURE 7-1: *I_Q vs. Temperature.*

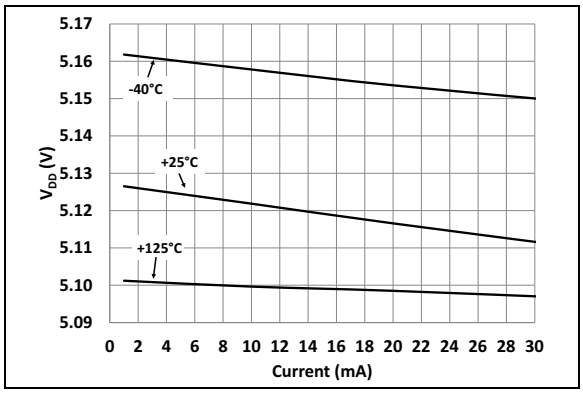

FIGURE 7-4: *Load Regulation.*

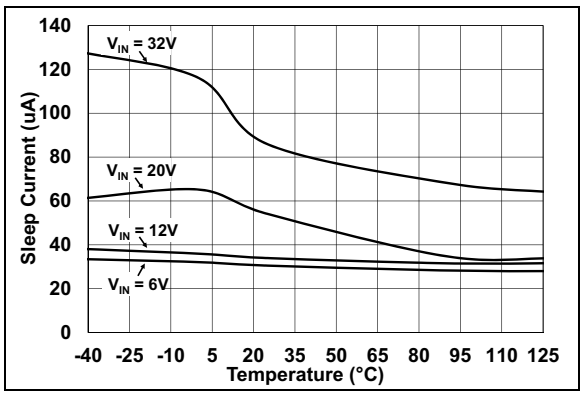

FIGURE 7-2: *IQ vs. Temperature in Sleep Mode.*

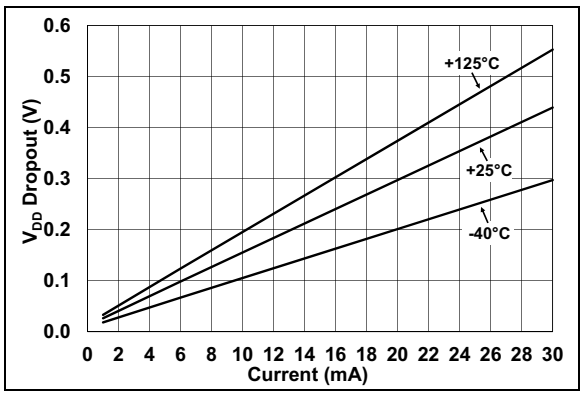

FIGURE 7-5: *V_{DD} Dropout Voltage vs. Output Current (mA).*

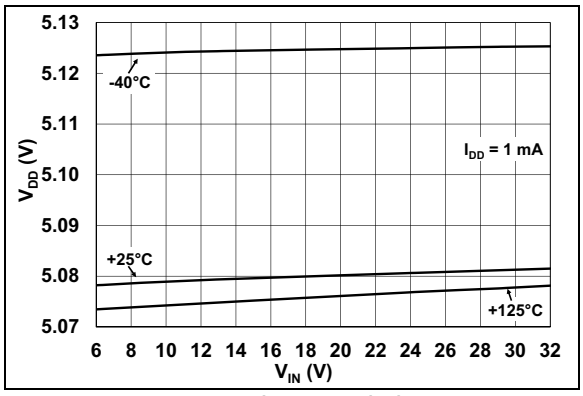

FIGURE 7-3: *Line Regulation.*

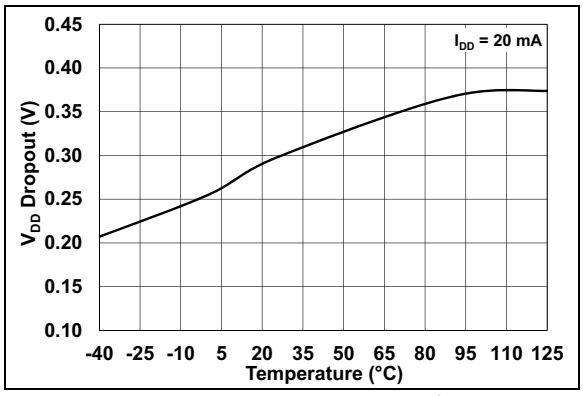

FIGURE 7-6: *V_{DD} Dropout Voltage vs. Temperature.*

Note: Unless otherwise indicated, V_{IN} = 12V, F_{SW} = 150 kHz, T_A = +25°C.

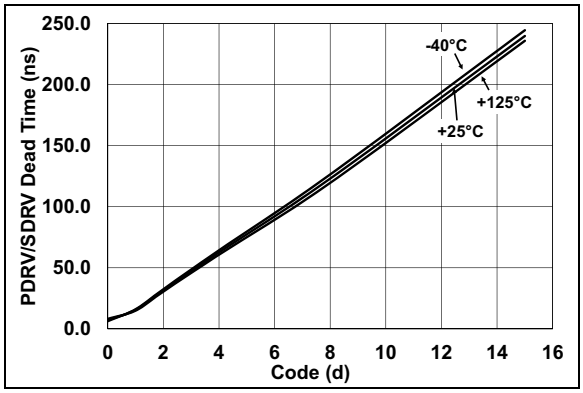

FIGURE 7-7: *Output Driver Dead Time vs. Code and Temperature.*

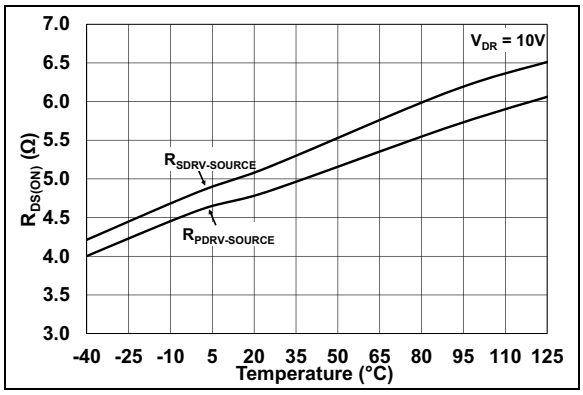

FIGURE 7-8: *Sourcing Output Driver $R_{DS(ON)}$ vs. Temperature.*

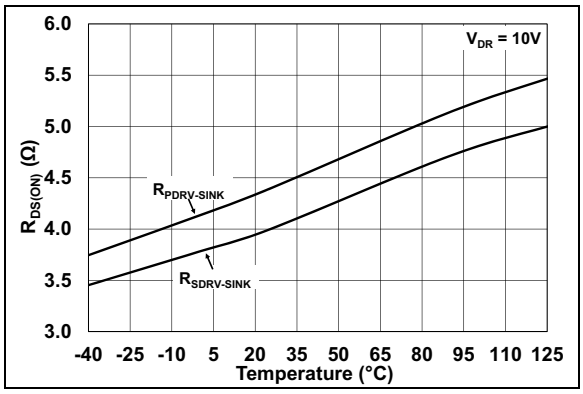

FIGURE 7-9: *Sinking Output Driver $R_{DS(ON)}$ vs. Temperature.*

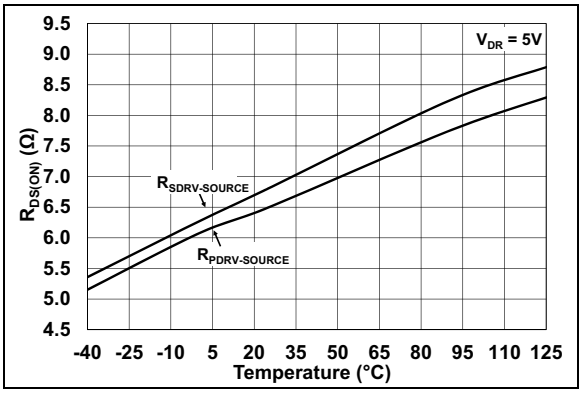

FIGURE 7-10: *Sourcing Output Driver $R_{DS(ON)}$ vs. Temperature.*

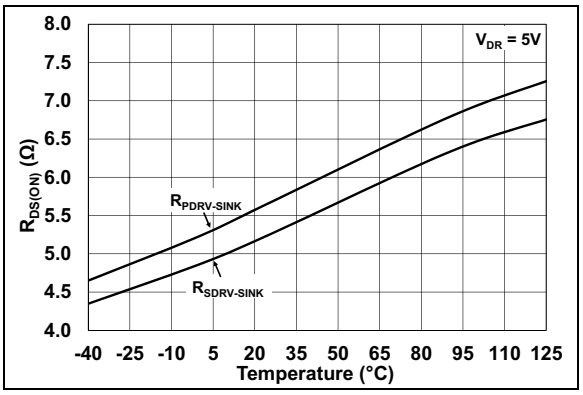

FIGURE 7-11: *Sinking Output Driver $R_{DS(ON)}$ vs. Temperature.*

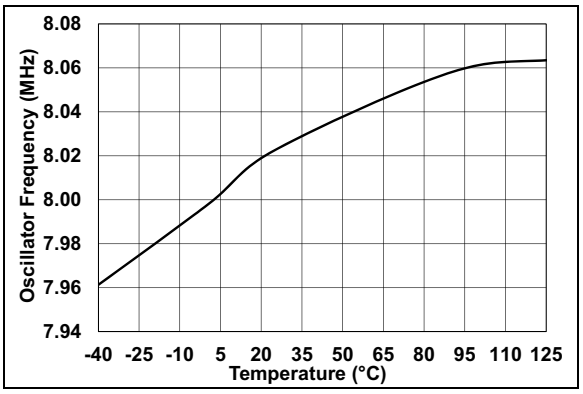

FIGURE 7-12: *Oscillator Frequency vs. Temperature.*

© 2015-2018 Microchip Technology Inc.

Note: Unless otherwise indicated, V_{IN} = 12V, F_{SW} = 150 kHz, T_A = +25°C.

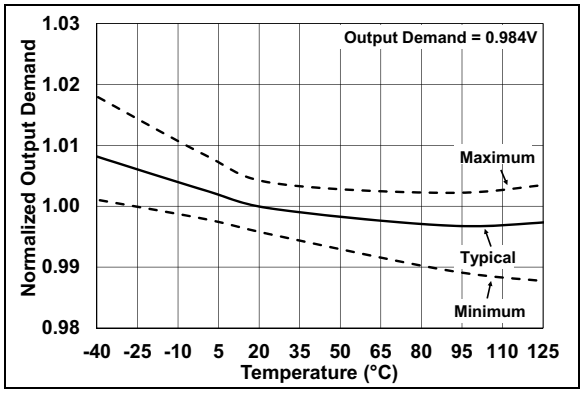

FIGURE 7-13: *Normalized Output Demand vs. Temperature.*

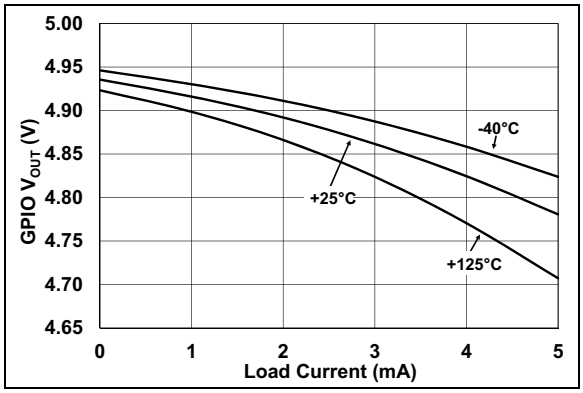

FIGURE 7-16: *Average GPIO Output Voltage vs. Current.*

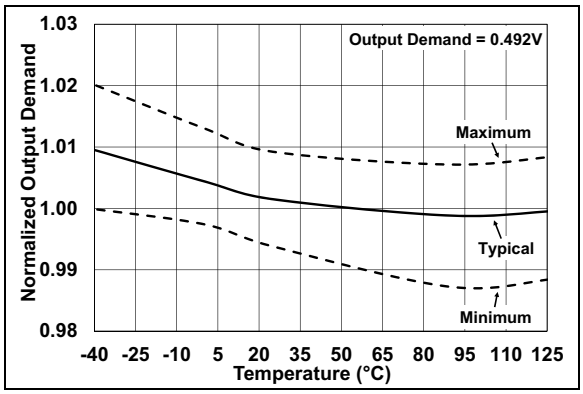

FIGURE 7-14: *Normalized Output Demand vs. Temperature.*

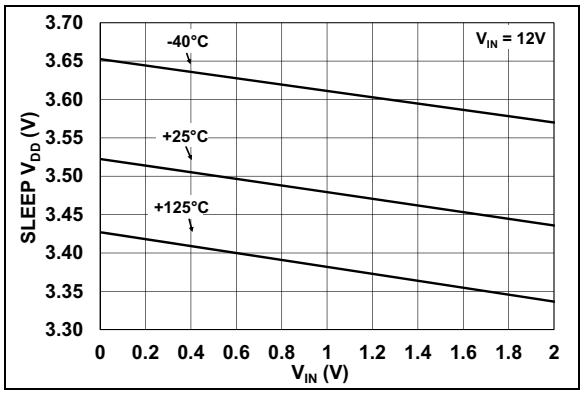

FIGURE 7-17: *Average SLEEP V_{DD} Output Voltage vs. Current.*

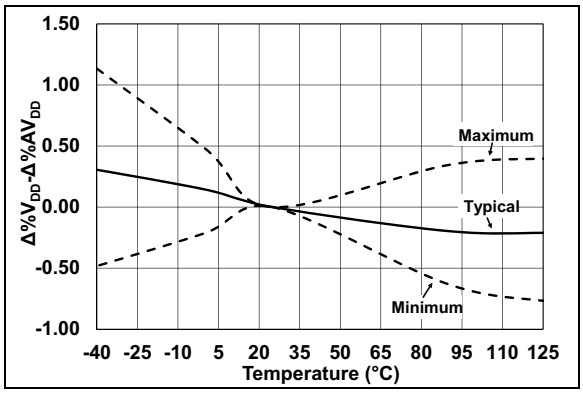

FIGURE 7-15: *V_{DD} vs. AV_{DD} Temperature Drift Tracking.*

NOTES:

© 2015-2018 Microchip Technology Inc.

8.0 SYSTEM BENCH TESTING

To allow for easier system design and bench testing, the MCP19116/7 devices feature a multiplexer used to output various internal analog signals. These signals can be measured on the GPA0 pin through a unity gain buffer. The configuration control of the GPA0 pin is found in the ABECON register (Register 6-14).

Control of the signals present at the output of the unity gain analog buffer is found in the ADCON0 register (Register 8-1).

REGISTER 8-1: ADCON0: ANALOG-TO-DIGITAL CONTROL REGISTER

U-0	R/W-0	R/W-0	R/W-0	R/W-0	R/W-0	R/W-0	R/W-0
—	CHS4	CHS3	CHS2	CHS1	CHS0	GO/$\overline{\text{DONE}}$	ADON
bit 7							bit 0

Legend:		
R = Readable bit	W = Writable bit	U = Unimplemented bit, read as ‘0’
u = Bit is unchanged	x = Bit is unknown	-n = Value at POR
‘1’ = Bit is set	‘0’ = Bit is cleared	

bit 7 **Unimplemented:** Read as ‘0’

bit 6-2 **CHS<4:0>:** Analog Channel Select bits
00000 = V_{IN}/n analog voltage measurement (V_{IN}/15.5)
00001 = V_{REF} + VZC (DAC reference voltage + VZC pedestal setting current regulation level)
00010 = OV_REF (reference for overvoltage comparator)
00011 = V_{BGR} (band gap reference)
00100 = V_S (voltage proportional to V_{OUT})
00101 = EA_SC (error amplifier after slope compensation output)
00110 = A2 (secondary current sense amplifier output at R_{FB_INT} connection)
00111 = Pedestal (Pedestal Voltage)
01000 = Reserved
01001 = Reserved
01010 = IP_ADJ (IP after Pedestal and Offset Adjust (at PWM Comparator))
01011 = IP_OFF_REF (IP Offset Reference)
01100 = V_{DR}/n (V_{DR}/n analog driver voltage measurement = 0.23V/V * V_{DR})
01101 = TEMP_SNS (analog voltage representing internal temperature)
01110 = DLL_VCON (Delay Locked Loop Voltage Reference - control voltage for dead time)
01111 = SLPCMP_REF (slope compensation reference)
10000 = Unimplemented
10001 = Unimplemented
10010 = Unimplemented
10011 = Unimplemented
10100 = Unimplemented
10101 = Unimplemented
10110 = Unimplemented
10111 = Unimplemented
11000 = GPA0/AN0
11001 = GPA1/AN1
11010 = GPA2/AN2
11011 = GPA3/AN3
11100 = GPB1/AN4
11101 = GPB4/AN5 (**MCP19117 only**)
11110 = GPB5/AN6 (**MCP19117 only**)
11111 = GPB6/AN7 (**MCP19117 only**)

REGISTER 8-1: ADCON0: ANALOG-TO-DIGITAL CONTROL REGISTER (CONTINUED)

bit 1 **GO/$\overline{\text{DONE}}$:** A/D Conversion Status bit
1 = A/D conversion cycle in progress. Setting this bit starts an A/D conversion cycle.
This bit is automatically cleared by hardware when the A/D conversion has completed.
0 = A/D conversion completed/not in progress

bit 0 **ADON:** A/D Conversion Status bit
1 = A/D converter module is operating
0 = A/D converter is shut off and consumes no operating current

© 2015-2018 Microchip Technology Inc.

9.0 DEVICE CALIBRATION

Read-only memory locations 2080h through 208Fh contain factory calibration data. Refer to **Section 18.0 "Flash Program Memory Control"** for information on how to read from these memory locations.

9.1 Calibration Word 1

Calibration Word 1 is at memory location 2080h. The DCSRFB<6:0> bits set the offset calibration for the current sense differential amplifier (A2) when configured using the internal feedback resistor. A calibration range of ±30 mV is provided with 20h and 00h being midscale (no offset). The MSB is polarity only. Firmware must read these values and copy them into the DCSCAL Special Function Register located in Bank 3 at 199h.

REGISTER 9-1: CALWD1: CALIBRATION WORD 1 REGISTER

U-0	U-0	U-0	U-0	U-0	U-0
—	—	—	—	—	—
bit 13					bit 8

U-0	R/P-1	R/P-1	R/P-1	R/P-1	R/P-1	R/P-1	R/P-1
—	DCSRFB6	DCSRFB5	DCSRFB4	DCSRFB3	DCSRFB2	DCSRFB1	DCSRFB0
bit 7							bit 0

Legend:			
R = Readable bit	P = Programmable bit	U = Unused bit, read as '0'	
-n = Value at POR	'1' = Bit is set	'0' = Bit is cleared	x = Bit is unknown

bit 13-7 **Unimplemented:** Read as '0'

bit 6-0 **DCSRFB<6:0>:** Input Differential Current Sense Calibration bits when configured using internal feedback resistor

9.2 Calibration Word 2

Calibration Word 2 is at memory location 2081h. It contains the calibration bits for the desaturation comparator current measurement input offset voltage. Firmware must read these values and write them into the DSTCAL register to implement the factory offset calibration. The factory offset calibration will minimize offset voltage. The desaturation comparator is one of the few examples where the user may want to implement their own offset voltage values. Writing user-defined values to the DSTCAL register provides this flexibility. Firmware must read these values and copy into the DSTCAL Special Function Register located in Bank 3 at 196h.

This register also contains the trim bits needed to trim the internal 5 kΩ feedback resistor to within 2% using the <RFBT5:0> bits. Firmware must read these values and copy them into the RFBTCAL Special Function Register located in Bank 3 at 197h.

REGISTER 9-2: CALWD2: CALIBRATION WORD 2 REGISTER

U-0	R/P-1	R/P-1	R/P-1	R/P-1	R/P-1
—	DST4	DST3	DST2	DST1	DST0
bit 13					bit 8

U-0	U-0	R/P-1	R/P-1	R/P-1	R/P-1	R/P-1	R/P-1
—	—	RFBT5	RFBT4	RFBT3	RFBT2	RFBT1	RFBT0
bit 7							bit 0

Legend:			
R = Readable bit	P = Programmable bit	U = Unused bit, read as ‘0’	
-n = Value at POR	‘1’ = Bit is set	‘0’ = Bit is cleared	x = Bit is unknown

bit 13 **Unimplemented:** Read as ‘0’

bit 12-8 **DST<4:0>:** Desaturation Comparator Current Measure Offset calibration bits
11111 = Maximum negative offset calibration (-30 mV)
•
•
•
10000 = Mid scale (0 mV)
00000 = Mid scale (0 mV)
•
•
•
01111 = Maximum positive offset calibration (+30 mV)

bit 7-6 **Unimplemented:** Read as ‘0’

bit 5-0 **RFBT<5:0>:** Internal Feedback Resistor Trim bits

© 2015-2018 Microchip Technology Inc.

9.3 Calibration Word 3

The BGR<4:0> bits at memory location 2082h calibrate the band gap reference. Firmware must read these values and copy them into the BGRCAL Special Function Register located in Bank 3 at 19Bh.

REGISTER 9-3: CALWD3: CALIBRATION WORD 3 REGISTER

U-0	U-0	U-0	U-0	U-0	U-0
—	—	—	—	—	—
bit 13					bit 8

U-0	U-0	U-0	R/P-1	R/P-1	R/P-1	R/P-1	R/P-1
—	—	—	BGR4	BGR3	BGR2	BGR1	BGR0
bit 7							bit 0

Legend:			
R = Readable bit	P = Programmable bit	U = Unused bit, read as ‘0’	
-n = Value at POR	‘1’ = Bit is set	‘0’ = Bit is cleared	x = Bit is unknown

bit 13-5 **Unused:** Read as ‘0’

bit 4-0 **BGR<4:0>:** Band Gap Reference Calibration bits

9.4 Calibration Word 4

The TTA<3:0> bits at memory location 2083h contain the calibration bits for the factory-set overtemperature threshold. Firmware must read these values and copy them into the TTACAL Special Function Register located in Bank 3 at 19Ah.

REGISTER 9-4: CALWD4: CALIBRATION WORD 4 REGISTER

U-0	U-0	U-0	U-0	U-0	U-0
—	—	—	—	—	—
bit 13					bit 8

U-0	U-0	U-0	U-0	R/P-1	R/P-1	R/P-1	R/P-1
—	—	—	—	TTA3	TTA2	TTA1	TTA0
bit 7							bit 0

Legend:			
R = Readable bit	P = Programmable bit	U = Unused bit, read as ‘0’	
-n = Value at POR	‘1’ = Bit is set	‘0’ = Bit is cleared	x = Bit is unknown

bit 13-4 **Unimplemented:** Read as ‘0’

bit 3-0 **TTA<3:0>:** Over-Temperature Threshold Calibration bits

9.5 Calibration Word 5

The TANA<9:0> bits at memory location 2084h contain the ADC reading from the internal temperature sensor when the silicon temperature is at 30°C. This 10-bit reading can be used to calibrate the ADC reading at any temperature. The temperature coefficient of the internal temperature sensor is 14.0 mV/°C.

REGISTER 9-5: CALWD5: CALIBRATION WORD 5 REGISTER

U-0	U-0	U-0	U-0	R/P-1	R/P-1
—	—	—	—	TANA9	TANA8
bit 13					bit 8

R/P-1	R/P-1	R/P-1	R/P-1	R/P-1	R/P-1	R/P-1	R/P-1
TANA7	TANA6	TANA5	TANA4	TANA3	TANA2	TANA1	TANA0
bit 7							bit 0

Legend:			
R = Readable bit	P = Programmable bit	U = Unused bit, read as ‘0’	
-n = Value at POR	‘1’ = Bit is set	‘0’ = Bit is cleared	x = Bit is unknown

bit 13-10 **Unimplemented:** Read as ‘0’

bit 9-0 **TANA<9:0>:** ADC reading of internal silicon temperature at 30°C Calibration bits

9.6 Calibration Word 6

The FCAL<6:0> bits at memory location 2085h set the internal oscillator calibration. Firmware must read these values and copy them into the OSCCAL Special Function Register located in Bank 3 at 198h.

REGISTER 9-6: CALWD6: CALIBRATION WORD 6 REGISTER

U-0	U-0	U-0	U-0	U-0	U-0
—	—	—	—	—	—
bit 13					bit 8

U-0	R/P-1	R/P-1	R/P-1	R/P-1	R/P-1	R/P-1	R/P-1
—	FCAL6	FCAL5	FCAL4	FCAL3	FCAL2	FCAL1	FCAL0
bit 7							bit 0

Legend:			
R = Readable bit	P = Programmable bit	U = Unused bit, read as ‘0’	
-n = Value at POR	‘1’ = Bit is set	‘0’ = Bit is cleared	x = Bit is unknown

bit 13-7 **Unimplemented:** Read as ‘0’

bit 6-0 **FCAL<6:0>:** Internal Oscillator Calibration bits

© 2015-2018 Microchip Technology Inc.

9.7 Calibration Word 7

The DCS<6:0> bits at memory location 2086h store the factory-set offset calibration for the current sense differential amplifier (A2) when configured using I_{SOUT}. Firmware must read these values and copy them into the DCSCAL Special Function Register located in Bank 3 at 199h. If using the internal feedback resistor, refer to Register 9-1.

REGISTER 9-7: CALWD7: CALIBRATION WORD 7 REGISTER

U-0	U-0	U-0	U-0	U-0	U-0
—	—	—	—	—	—
bit 13					bit 8

U-0	R/P-1	R/P-1	R/P-1	R/P-1	R/P-1	R/P-1	R/P-1
—	DCS6	DCS5	DCS4	DCS3	DCS2	DCS1	DCS0
bit 7							bit 0

Legend:			
R = Readable bit	P = Programmable bit	U = Unimplemented bit, read as ‘0’	
-n = Value at POR	‘1’ = Bit is set	‘0’ = Bit is cleared	x = Bit is unknown

bit 13-7 **Unimplemented:** Read as ‘0’

bit 6-0 **DCS<6:0>:** Differential Current Sense Amplifier Calibration bits when used with I_{SOUT}.

9.8 Calibration Word 8

Calibration Word 8 is at memory location 2087h and contains the calibration bits for the Error Amplifier Offset Voltage EAOFFCAL<4:0> and for the Current Sense Amplifier (A2) Gain while configured using the Internal Feedback Resistor A2GRFBCAL<3:0>. A2 Gain calibration trim bits set the 10V/V gain of the current sense amplifier (A2). If the user has configured the device using the internal Feedback Resistor, the A2GRFBCAL<3:0> calibration value must be read via firmware and copied into the A2GCAL Special Function Register located in Bank 3 at 19Eh. Firmware must also read the EAOFFCAL<4:0> values and copy them into the EAOFFCAL Special Function Register located in Bank 3 at 19Ch.

REGISTER 9-8: CALWD8: CALIBRATION WORD 8 REGISTER

U-0	U-0	R/P-1	R/P-1	R/P-1	R/P-1
—	—	A2GRFB-CAL3	A2GRFB-CAL2	A2GRFB-CAL1	A2GRFB-CAL0
bit 13					bit 8

U-0	U-0	U-0	R/P-1	R/P-1	R/P-1	R/P-1	R/P-1
—	—	—	EAOFFCAL4	EAOFFCAL3	EAOFFCAL2	EAOFFCAL1	EAOFFCAL0
bit 7							bit 0

Legend:			
R = Readable bit	P = Programmable bit	U = Unimplemented bit, read as ‘0’	
-n = Value at POR	‘1’ = Bit is set	‘0’ = Bit is cleared	x = Bit is unknown

bit 13-12 **Unimplemented:** Read as ‘0’

bit 11-8 **A2GRFBCAL<3:0>:** A2 Current Sense Amplifier Gain Calibration bits

bit 7-5 **Unimplemented:** Read as ‘0’

bit 4-0 **EAOFFCAL<4:0>:** Error Amplifier Offset Voltage Calibration bits

© 2015-2018 Microchip Technology Inc.

9.9 Calibration Word 9

Calibration Word 9 is at memory location 2088h and contains the calibration bits for the OVREF DAC span trim OVRSPCAL<4:0> and the Current Sense Amplifier while configured using I_{SOUT} A2GCAL<3:0>. The OVRSPCAL<4:0> is an individual adjustment specific to calibrating the OVREF DAC span. Firmware must read these values and copy them into the OVRSPCAL Special Function Register located in Bank 3 at 19Fh.

If the user has configured the device using the external feedback path utilizing I_{SOUT}, the A2GCAL<3:0> value must be read via firmware and copied into the A2GCAL Special Function Register located in Bank 3 at 19Eh.

REGISTER 9-9: CALWD9: CALIBRATION WORD 9 REGISTER

U-0	R/P-1	R/P-1	R/P-1	R/P-1	R/P-1
—	OVRSP-CAL4	OVRSP-CAL3	OVRSP-CAL2	OVRSP-CAL1	OVRSP-CAL0
bit 13					bit 8

U-0	U-0	U-0	U-0	R/P-1	R/P-1	R/P-1	R/P-1
—	—	—	—	A2GCAL3	A2GCAL2	A2GCAL1	A2GCAL0
bit 7							bit 0

Legend:			
R = Readable bit	P = Programmable bit	U = Unimplemented bit, read as ‘0’	
-n = Value at POR	‘1’ = Bit is set	‘0’ = Bit is cleared	x = Bit is unknown

bit 13 **Unimplemented:** Read as ‘0’

bit 12-8 **OVRSPCAL<4:0>:** OVREF Span Adjustment bits

bit 7-4 **Unimplemented:** Read as ‘0’

bit 3-0 **A2GCAL<3:0>:** A2 Current Sense Amplifier Gain Calibration bits

9.10 Calibration Word 10

Calibration word 10 at memory location 2089h contains the calibration bits for VREF2 DAC span trim VR2SPCAL<4:0> and the VREF DAC span trim VRSPCAL<4:0>. The VR2SPCAL<4:0> is an individual adjustment specific to calibrating the VREF2 DAC span. Firmware must read these values and copy them into the VR2SPCAL Special Function Register located in Bank 2 at 11Ah.

The VRSPCAL<4:0> is an individual adjustment specific to calibrating the VREF DAC span. Firmware must read these values and copy them into the VRSPCAL Special Function Register located in Bank 2 at 119h.

REGISTER 9-10: CALWD10: CALIBRATION WORD 10 REGISTER

U-0	R/P-1	R/P-1	R/P-1	R/P-1	R/P-1
—	VR2SPCAL4	VR2SPCAL3	VR2SPCAL2	VR2SPCAL1	VR2SPCAL0
bit 13					bit 8

U-0	U-0	U-0	R/P-1	R/P-1	R/P-1	R/P-1	R/P-1
—	—	—	VRSPCAL4	VRSPCAL3	VRSPCAL2	VRSPCAL1	VRSPCAL0
bit 7							bit 0

Legend:			
R = Readable bit	P = Programmable bit	U = Unimplemented bit, read as ‘0’	
-n = Value at POR	‘1’ = Bit is set	‘0’ = Bit is cleared	x = Bit is unknown

bit 13 **Unimplemented:** Read as ‘0’

bit 12-8 **VR2SPCAL<4:0>:** VREF2 Span Adjustment bits

bit 7-5 **Unimplemented:** Read as ‘0’

bit 4-0 **VRSPCAL<4:0>:** VREF Span Adjustment bits

© 2015-2018 Microchip Technology Inc.

9.11 Calibration Word 11

Calibration word 11 at memory location 208Ah contains the calibration bits for the 4V LDO (AV_{DD}) trim AVDDCAL<3:0> and the offset voltage of the analog test buffer BUFF<7:0>. AV_{DD} supplies the internal analog circuitry and is the default ADC Reference voltage. Firmware must read these values and copy them into the AVDDCAL Special Function Register located in Bank 3 at 19Dh.

Also stored at address 208Ah is the Analog test MUX buffer offset value. This is an 8-bit, two's complement word that represents the buffer's offset voltage in units of mV. This value can be used to correct for buffer offset of the analog test signal measurements. See **Section 8.0, System Bench Testing** for test signal details.

REGISTER 9-11: CALWD11: CALIBRATION WORD 11 REGISTER

U-0	U-0	R/P-1	R/P-1	R/P-1	R/P-1
—	—	AVDDCAL3	AVDDCAL2	AVDDCAL1	AVDDCAL0
bit 13					bit 8

R/P-1	R/P-1	R/P-1	R/P-1	R/P-1	R/P-1	R/P-1	R/P-1
BUFF7	BUFF6	BUFF5	BUFF4	BUFF3	BUFF2	BUFF1	BUFF0
bit 7							bit 0

Legend:			
R = Readable bit	P = Programmable bit	U = Unimplemented bit, read as '0'	
-n = Value at POR	'1' = Bit is set	'0' = Bit is cleared	x = Bit is unknown

bit 13-12 **Unimplemented:** Read as '0'

bit 11-8 **AVDDCAL<3:0>:** AV_{DD} 4.096V LDO Trim bits

bit 7-0 **BUFF<7:0>:** Analog Test MUX Buffer Offset bits
`11111111` = Mid scale (-1mV)
•
•
`10000000` = Largest negative offset (-128 mV)
`01111111` = Largest positive offset (+128 mV)
•
•
`00000000` = Mid scale (0 mV)

9.12 Calibration Word 12

The ADCCAL<13:0> bits at memory location 208Bh contain the calibration bits for the A/D Converter. Calibration Word 12 (ADCCAL<13:0>) contains the factory measurement of the full-scale ADC Reference. The value represents the number of A/D converter counts per volt. ADCC<4:0> bits represent the fraction of an A/D converter count, which can provide additional precision when oversampling the ADC for enhanced resolution. This calibration word can be used to calibrate signals read by the Analog-to-Digital Converter.

REGISTER 9-12: CALWD12: CALIBRATION WORD 12 REGISTER

R/P-1	R/P-1	R/P-1	R/P-1	R/P-1	R/P-1
ADCC13	ADCC12	ADCC11	ADCC10	ADCC9	ADCC8
bit 13					bit 8

R/P-1	R/P-1	R/P-1	R/P-1	R/P-1	R/P-1	R/P-1	R/P-1
ADCC7	ADCC6	ADCC5	ADCC4	ADCC3	ADCC2	ADCC1	ADCC0
bit 7							bit 0

Legend:			
R = Readable bit	P = Programmable bit	U = Unimplemented bit, read as ‘0’	
-n = Value at POR	‘1’ = Bit is set	‘0’ = Bit is cleared	x = Bit is unknown

bit 13-5 **ADCC<13:5>:** Whole number of A/D converter count
`111111111` = 511
•
•
•
`000000000` = 0

bit 4-0 **ADCC<4:0>:** Fraction number of A/D converter count
`11111` = 0.96875
•
•
•
`00001` = 0.03125
`00000` = 0.00000

© 2015-2018 Microchip Technology Inc.

10.0 ADDRESSABLE USART MODULE

The Addressable USART module described in this document is designed into the PIC16F91x.

The features of that module include:

- Asynchronous and Synchronous modes:
  - Asynchronous (full duplex)
  - Synchronous - Master (half duplex)
  - Synchronous - Slave (half duplex)
- 8- and 9-bit data operations
- Single and Continuous Receive modes
- Address detect
- Two-byte FIFOs for Transmit and Receive operations
- Majority bit detection in Asynchronous mode
- 8-bit Baud Rate generator with speed selection
  - Fosc/16 or Fosc/64 for Asynchronous mode
  - Fosc/4 for Synchronous mode
- Status bits for
  - Framing Error
  - Overrun Error
  - Transmit Shift Register Status

In addition, the existing USART features are altered. These features are changed as previous modules did not exhibit the desired behavior. These alterations include:

- Holding all USART state machines in Reset while SPEN (RCSTA<7>) = 0
- Clarification on the TRMT (TXSTA<1>) status bit

10.1 Module Reset

When the SPEN (RCSTA<7>) is cleared, all USART state machines are held in Reset. This allows for software re-initialization of the module by toggling the SPEN bit. This also causes all status bits to be reset. All other R/W bits are available to the user, which allows them to pre-configure the module prior to setting the SPEN bit.

10.2 Pin Placement and Port Interaction

The bidirectional TX/CK pin is located on GPB6. The bidirectional RX/DT pin is located on GPB7. If TRISC<6> and TRISC<7> are configured as inputs ('1'), the USART control will automatically reconfigure the pin from input to output as needed.

10.3 USART Asynchronous mode

In this mode, the USART uses standard non-return-to-zero (NRZ) format (one Start bit, eight or nine data bits, and one Stop bit). The BRG is used to derive the baud rate frequencies from the system clock. The USART transmits and receives the LSB first. The transmitter and receiver are functionally independent, but use the same data format and baud rate. The BRG produces a clock, either x4, x16 or x64 of the bit shift rate, depending on its configuration (see **Section 10.3.2, Asynchronous Receive Mode**). Parity is not supported by the hardware, but can be implemented in software using the ninth data bit option. Asynchronous mode is stopped during Sleep. Asynchronous mode is selected by clearing the SYNC (TXSTA<4>) bit.

10.3.1 ASYNCHRONOUS TRANSMIT MODE

The USART transmitter block diagram is shown in Figure 10-1. The heart of the transmitter is the transmit (serial) shift register (TSR). The shift register obtains its data from the read/write transmit buffer, TXREG. The TXREG register is loaded with data via software. The TSR register is not loaded until the Stop bit has been transmitted from the previous load. As soon as the Stop bit is transmitted, TSR is loaded with new data from the TXREG register (if available). The transmit register (TXREG) is double buffered. As the user writes to TXREG, the data is transferred from the buffer to the transmit shift register (TSR), thus freeing up the buffer register.

The interrupt flag TXIF is set as long as the TXEN (TXSTA<5>) bit is set and TXREG is empty, indicating that the transmit buffer register (TXREG) is enabled and free to accept another word. Flag bit TXIF (Transmit Buffer Empty) is read-only and will be set, regardless of the state of the TXIE bit, and cannot be cleared in software. It will be reset only when new data is loaded into TXREG.

Transmission is enabled by setting the enable bit TXEN. The actual transmission will not occur until the TXREG register has been loaded with data and the BRG has produced a shift clock (Figure 10-2). The transmission can also be started by first loading TXREG and then setting the enable bit TXEN. Normally, when transmission is first started, TSR is empty. At that point, transfer to TXREG will result in an immediate transfer to TSR, resulting in an empty TXREG. A back-to-back transfer is thus possible (Figure 10-3). Clearing the enable bit TXEN during a transmission will cause the transmission to be aborted and will reset the transmitter. As a result, the GPB6/TX/CK/AN7 pin will revert to hi-impedance.

If 9-bit transmission is desired, set the TX9 control bit. A set ninth data bit will indicate that the eight Least Significant data bits are an address when the receiver is set for address detection.

While TXIF indicates the status of the transmit buffer register, the TRMT (TXSTA<1>) bit indicates the status of the transmit operation. The TRMT bit is cleared automatically upon a byte transfer from TXREG to the Shift register, and is set at the end of a stop bit. A '1' value in the TRMT bit signifies that the transmit state machine is idle. The TRMT bit is read-only and is valid for both Asynchronous and Synchronous transmissions. No interrupt is associated with the TRMT bit.

When setting up an Asynchronous Transmission, follow these steps:

1. Initialize the SPBRG register for the appropriate baud rate. If a high-speed baud rate is desired, set bit BRGH.
2. Enable the asynchronous serial port by clearing bit SYNC and setting bit SPEN.
3. If interrupts are desired, then set enable bit TXIE.
4. If 9-bit transmission is desired, then set transmit bit TX9.
5. Enable the transmission by setting bit TXEN, which will also set bit TXIF.
6. If 9-bit transmission is selected, the ninth bit should be loaded in bit TX9D.
7. Load data to the TXREG register (starts transmission).
8. If using interrupts, set GIE (INTCON<7>) and PEIE (INTCON<6>) bits.

FIGURE 10-1: USART TRANSMIT BLOCK DIAGRAM

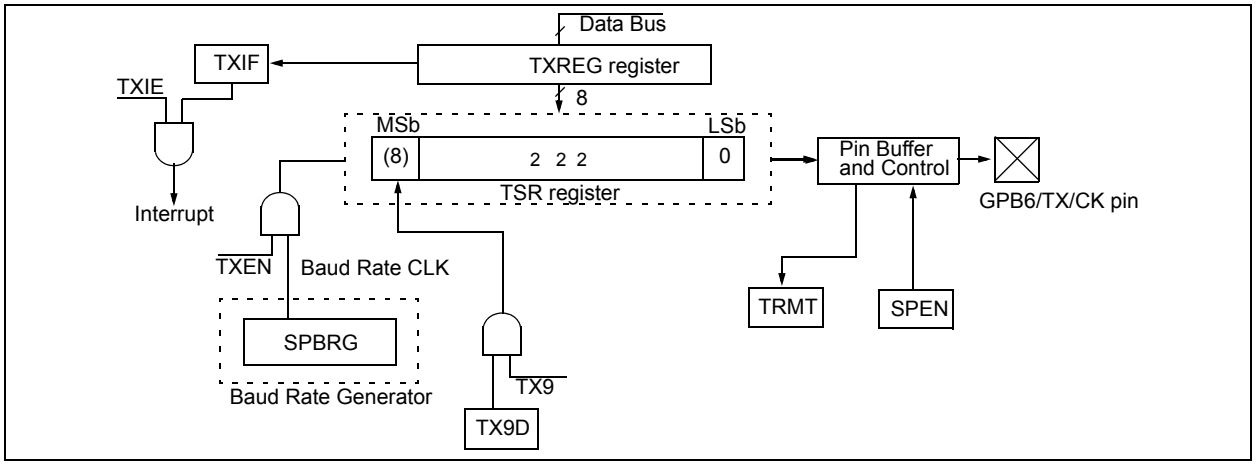

FIGURE 10-2: ASYNCHRONOUS MASTER TRANSMISSION

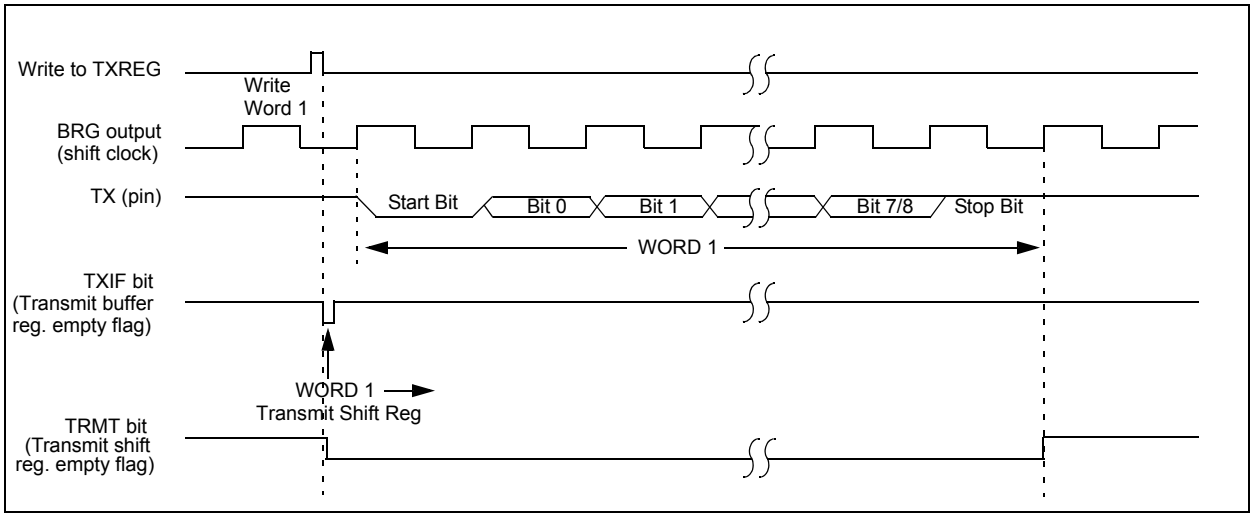

© 2015-2018 Microchip Technology Inc.

FIGURE 10-3: ASYNCHRONOUS TRANSMISSION (BACK TO BACK)

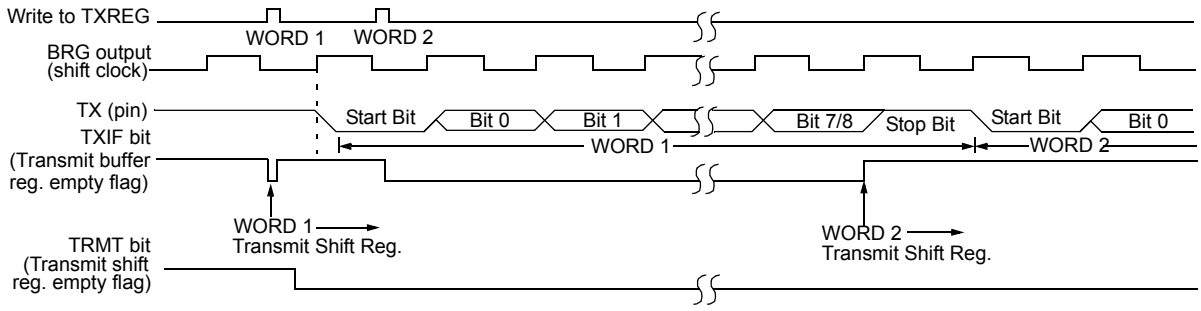

Note: This timing diagram shows two consecutive transmissions.

10.3.2 ASYNCHRONOUS RECEIVE MODE

The receiver block diagram is shown in Figure 10-4. The data is received on the GPB7/RX/DT/CCD pin and drives the data recovery block. The data recovery block is a shifter operating at x64, x16 or x4 times the baud rate. The main receive serial shifter operates at the bit rate or at Fosc. Once asynchronous mode is selected, reception is enabled by setting the CREN (RCSTA<4>) bit.

The heart of the receiver is the receive (serial) shift register (RSR). After sampling the Stop bit, the received data in the RSR is transferred to RCREG (if empty). If the transfer is complete, flag bit RCIF (PIR1<6>) is set. The interrupt can be enabled by setting the RCIE (PIE1<6>) bit. Flag bit RCIF is read-only and cleared by hardware. It is cleared when RCREG has been read and is empty. RCREG is double buffered (two deep FIFO). It is possible for two bytes of data to be received and transferred to the RCREG FIFO and a third byte to begin shifting to the RSR. On detection of the Stop bit of the third byte, if RCREG is full, the overrun error bit OERR (RCSTA<1>) will be set. The word in RSR will be lost. RCREG can be read twice to retrieve the two bytes in the FIFO. Overrun bit OERR has to be cleared in software. This is done by resetting the receive logic (CREN is cleared and then set). If bit OERR is set, transfers from the RSR register to RCREG are inhibited, and no further data will be received. The OERR bit can then be cleared in software. Framing error bit FERR (RCSTA<2>) is set if a Stop bit is detected as clear. The FERR bit and the ninth receive bit are buffered the same way as the receive data. Reading the RCREG will load bits RX9D and FERR with new values. The user will need to read the RCSTA register before reading RCREG in order to not lose the old FERR and RX9D data.

The USART module has a special provision for multi-processor communication. When the RX9 bit is set in the RCSTA register, nine bits are received and the ninth bit is placed in the RX9D status bit of the RSTA register. The port can be programmed such that when the Stop bit is received, the serial port interrupt will only activate if the RX9D bit is set. This feature is enabled by setting the ADDEN bit in the RCSTA register and can be used in a multi-processor system as indicated in this section.

To transmit a block of data in a multi-processor system, the master processor must first send an address byte that identifies the target slave. An address byte is identified by the RX9D bit being a ‘1’ (instead of a ‘0’ for a data byte). If the ADDEN bit is set in the slave’s RCSTA register, all data bytes will be ignored. However, if the ninth received bit is equal to a ‘1’, indicating that the received byte is an address, the slave will be interrupted and the contents of the Receive Shift Register (RSR) will be transferred into the receive buffer. This allows the slave to be interrupted only by addresses, so that the slave can examine the received byte to see if it is addressed. The addressed slave will then clear its ADDEN bit and prepare to receive data bytes from the master.

When the ADDEN bit is set, all data bytes are ignored. Following the Stop bit, the data will not be loaded into the receive buffer and no interrupt will occur. If another byte is shifted into the RSR, the previous data byte will be lost.

The ADDEN bit will only take affect when the receiver is configured in 9-bit mode.

To indicate that a reception is in progress, the RCIDL bit (BAUDCTL<6>) reflects the current state of the receive operation. This bit is cleared (‘0’) on the leading edge of a start bit and set (‘1’) upon the end of a Stop bit. A ‘1’ value in the RCIDL bit signifies that the receive state machine is idle. The RCIDL bit is read-only and is valid for both Asynchronous and Synchronous receptions. No interrupt is associated with the RCIDL bit. See Figures 10-5, 10-6 and 10-7 for timing details of the RCIDL signal.

When setting up an Asynchronous Reception, follow these steps:

1. Initialize the SPBRG register for the appropriate baud rate. If a high speed baud rate is desired, set bit BRGH.
2. Enable the asynchronous serial port by clearing bit SYNC and setting bit SPEN.
3. If interrupts are desired, then set enable bit RCIE.
4. If 9-bit reception is desired, then set bit RX9.
5. Set ADDEN if address detect is needed.
6. Enable the reception by setting bit CREN.
7. Flag bit RCIF will be set when reception is complete and an interrupt will be generated if enable bit RCIE is set.
8. Read the RCSTA register to get the ninth bit (if enabled) and determine if any error occurred during reception.
9. Read the 8-bit received data by reading the RCREG register.
10. If any error occurred, clear the error by clearing enable bit CREN.
11. If using interrupts, set GIE (INTCON<7>) and PEIE (INTCON<6>) bits.

FIGURE 10-4: USART RECEIVE BLOCK DIAGRAM

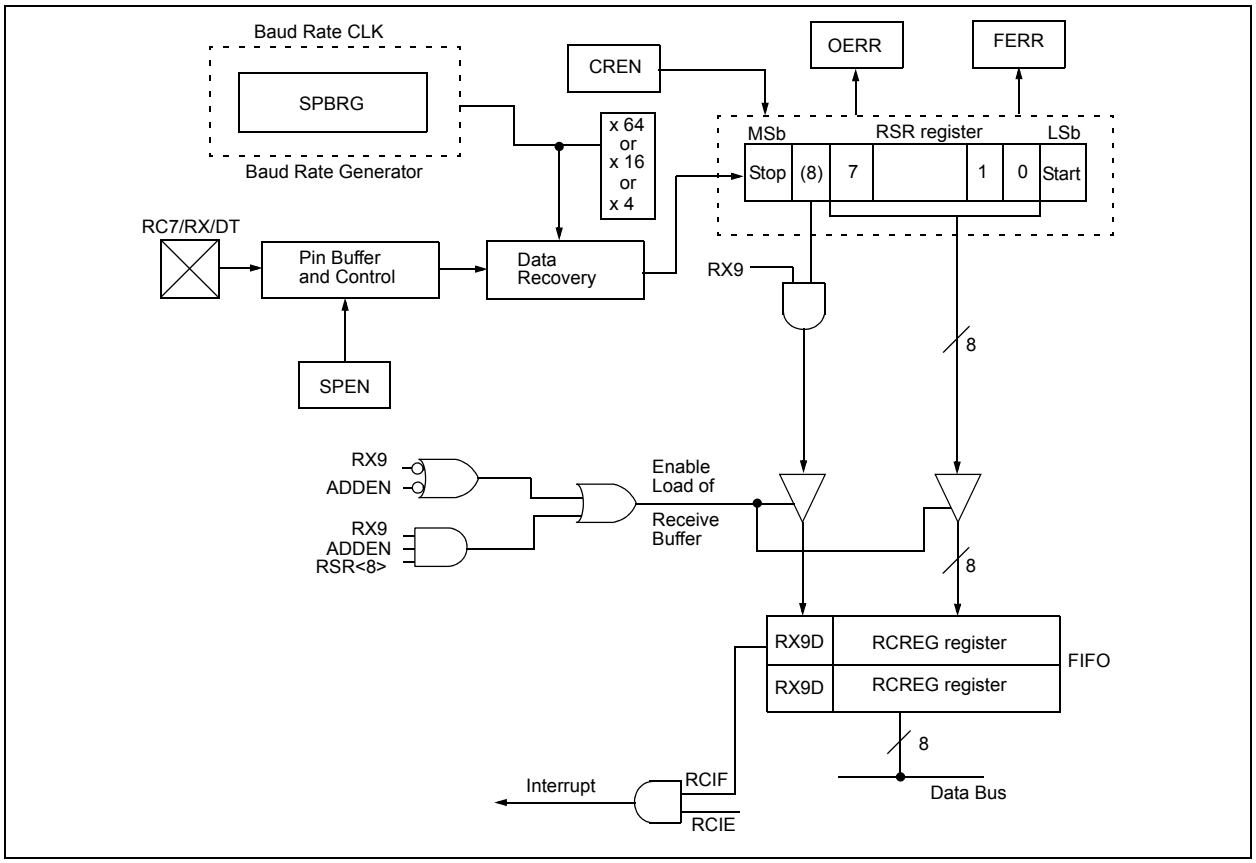

© 2015-2018 Microchip Technology Inc.

FIGURE 10-5: ASYNCHRONOUS RECEPTION

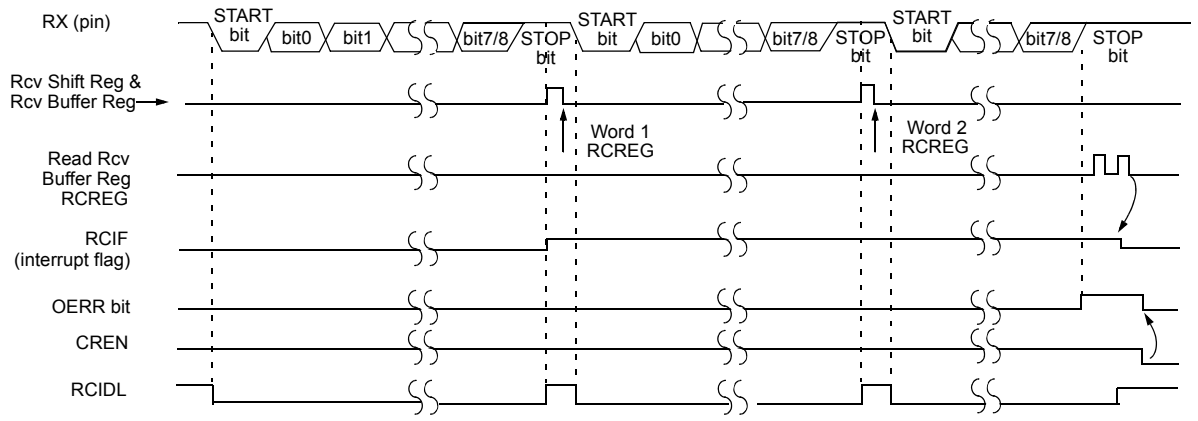

Note: This timing diagram shows three words appearing on the RX input. The RCREG (receive buffer) is read after the third word, causing the OERR (overrun) bit to be set.

FIGURE 10-6: ASYNCHRONOUS RECEPTION WITH ADDRESS DETECT

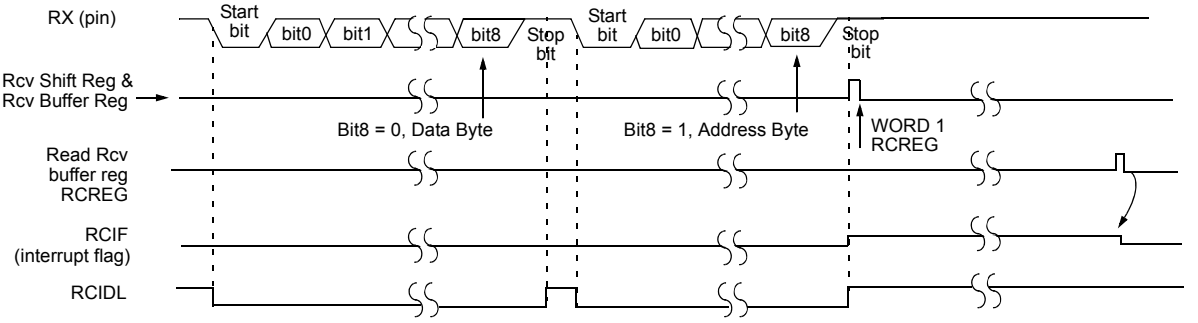

Note: This timing diagram shows a data byte followed by an address byte.The data byte is not read into the RCREG (receive buffer) because ADDEN = 0.

FIGURE 10-7: ASYNCHRONOUS RECEPTION WITH ADDRESS BYTE FIRST

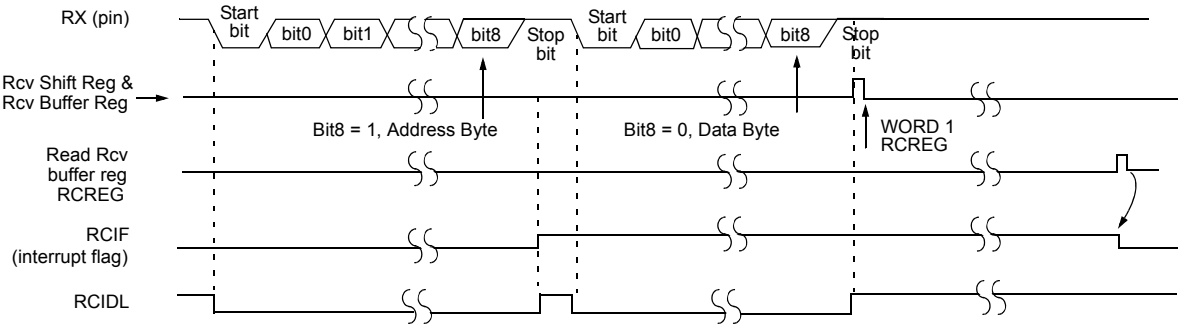

Note: This timing diagram shows an address byte followed by an data byte. The data byte is not read into the RCREG (receive buffer) because ADDEN was not updated and still = 0.

10.4 USART Synchronous Master Mode

In Synchronous Master mode, the data is transmitted in a half-duplex manner (i.e., transmission and reception do not occur at the same time). When transmitting data, the reception is inhibited and vice versa. Synchronous mode is entered by setting bit SYNC (TXSTA<4>). In addition, enable bit SPEN (RCSTA<7>) is set in order to configure the GPB6/TX/CK/AN7 and the GPB7/RX/DT/CCD I/O pins to CK (clock) and DT (data) lines, respectively. The Master mode indicates that the processor transmits the master clock on the CK line. The Master mode is entered by setting bit CSRC (TXSTA<7>).

10.4.1 SYNCHRONOUS MASTER TRANSMIT MODE

Synchronous Master Transmit mode works similarly to Asynchronous Transmit mode, see **Section 10.3.1 "Asynchronous Transmit Mode"**. In Synchronous Transmit mode, the first data byte is shifted out on the next available rising edge of the CK line. Data out is stable relative to the falling edge of the synchronous clock.

Clearing enable bit TXEN (TXSTA<5>) during a transmission causes the transmission to be aborted and resets the transmitter. The DT and CK pins revert to high-impedance. If either bit CREN (RCSTA<4>) or bit SREN (RCSTA<5>) is set during a transmission, the transmission is aborted and the DT pin reverts to a hi-impedance state (for a reception). The CK pin remains an output if bit CSRC (TXSTA<7>) is set (internal clock).

The transmitter logic, however, is not reset, although it is disconnected from the pins. In order to reset the transmitter, the user has to clear bit TXEN. If bit SREN is set (to interrupt an on-going transmission and receive a single word), then after the single word is received, bit SREN is cleared and the serial port reverts back to transmitting, since bit TXEN is still set. The DT line immediately switches from high-impedance Receive mode to transmit and start driving. To avoid this, it is recommended that the bit TXEN be cleared.

Steps to follow when setting up a Synchronous Master Transmission:

1. Initialize the SPBRG register for the appropriate baud rate.
2. Enable the synchronous master serial port by setting bits SYNC, SPEN and CSRC.
3. If interrupts are desired, set enable bit TXIE.
4. If 9-bit transmission is desired, set bit TX9.
5. Enable the transmission by setting bit TXEN.
6. If 9-bit transmission is selected, the ninth bit should be loaded in bit TX9D.
7. Start transmission by loading data to the TXREG register.
8. If using interrupts, ensure that GIE and PEIE (bits 7 and 6) of the INT-CON register are set.

FIGURE 10-1: SYNCHRONOUS TRANSMISSION

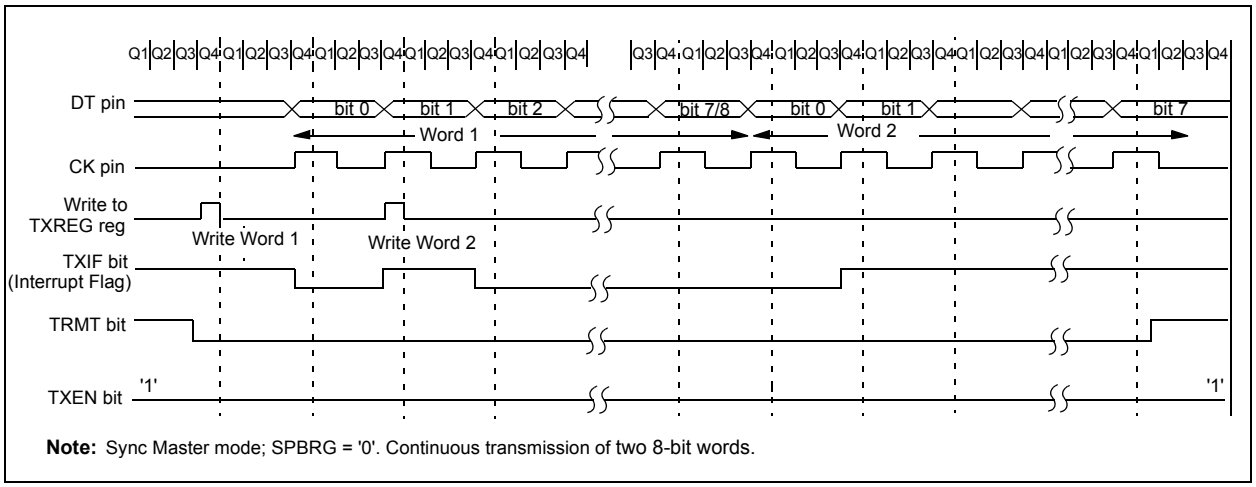

Note: Sync Master mode; SPBRG = '0'. Continuous transmission of two 8-bit words.

© 2015-2018 Microchip Technology Inc.

FIGURE 10-2: SYNCHRONOUS TRANSMISSION (THROUGH TXEN)

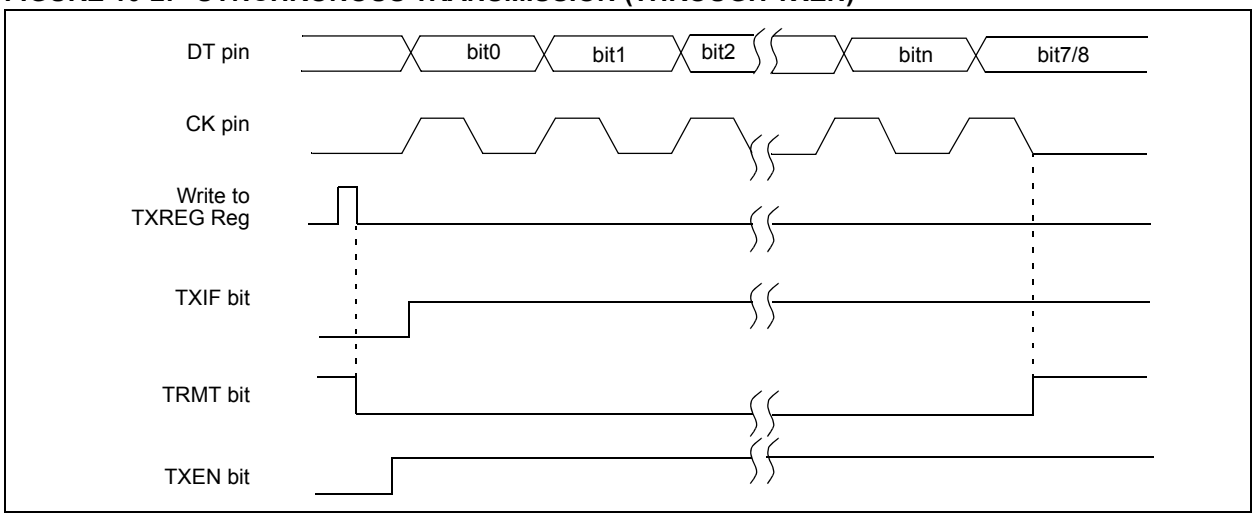

10.4.2 SYNCHRONOUS MASTER RECEIVE MODE

Synchronous Master Receive mode works similarly to Asynchronous Receive mode; see **Section 10.3.2 "Asynchronous Receive Mode"**. In Synchronous Receive mode, reception is enabled by setting either enable bit SREN (RCSTA<5>) or enable bit CREN (RCSTA<4>). Data is sampled on the GPB7/RX/DT/CCD pin on the falling edge of the clock. If enable bit SREN is set, then only a single word is received. If enable bit CREN is set, the reception is continuous until CREN is cleared. If both bits are set, CREN takes precedence.

When setting up a Synchronous Master Reception:

1. Initialize the SPBRG register for the appropriate baud rate.
2. Enable the synchronous master serial port by setting bits SYNC, SPEN and CSRC.
3. CREN and SREN bits are clear.
4. If interrupts are desired, then set enable bit RCIE.
5. If 9-bit reception is desired, then set bit RX9.
6. If a single reception is required, set bit SREN. For continuous reception, set bit CREN.
7. Interrupt flag bit RCIF is set when reception is complete and an interrupt is generated if enable bit RCIE was set.
8. Read the RCSTA register to get the ninth bit (if enabled) and determine if any error occurred during reception.
9. Read the 8-bit received data by reading the RCREG register.
10. If any error occurred, clear the error by clearing bit CREN.
11. If using interrupts, ensure that GIE and PEIE (bits 7 and 6) of the INTCON register are set.

FIGURE 10-3: SYNCHRONOUS RECEPTION (MASTER MODE, SREN)

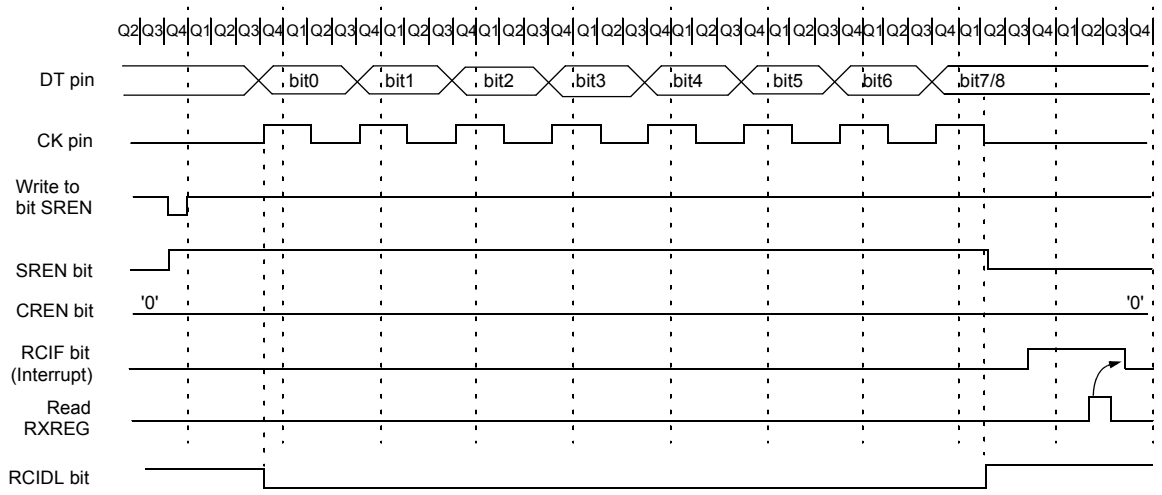

Note: Timing diagram demonstrates SYNC Master mode with bit SREN = '1' and bit BRG = '0'.

10.5 USART Synchronous Slave Mode

Synchronous Slave mode differs from the Master mode in the fact that the shift clock is supplied externally at the GPB6/TX/CK/AN7 pin (instead of being supplied internally in Master mode). This allows the device to transfer or receive data while in Sleep mode. Slave mode is entered by clearing bit CSRC (TXSTA<7>).

10.5.1 SYNCHRONOUS SLAVE TRANSMIT MODE

The operation of the Synchronous Master and Slave modes is identical, except in the case of the Sleep mode.

If two words are written to the TXREG and then the SLEEP instruction is executed, the following occurs:

a) The first word immediately transfers to the TSR register and transmits.
b) The second word remains in TXREG register.
c) Flag bit TXIF is not set.
d) When the first word has been shifted out of TSR, the TXREG register transfers the second word to the TSR and flag bit TXIF is not set.
e) If enable bit TXIE is set, the interrupt wakes the chip from Sleep and if the global interrupt is enabled, the program branches to the interrupt vector (0004h).

When setting up a Synchronous Slave Transmission, follow these steps:

1. Enable the synchronous slave serial port by setting bits SYNC and SPEN and clearing bit CSRC.
2. Clear bits CREN and SREN.
3. If interrupts are desired, then set enable bit TXIE.
4. If 9-bit transmission is desired, then set bit TX9.
5. Enable the transmission by setting enable bit TXEN.
6. If 9-bit transmission is selected, the ninth bit should be loaded in bit TX9D.
7. Start transmission by loading data to the TXREG register.
8. If using interrupts, ensure that GIE and PEIE (bits 7 and 6) of the INTCON register are set.

© 2015-2018 Microchip Technology Inc.

10.5.2 SYNCHRONOUS SLAVE RECEIVE MODE

The operation of the Synchronous Master and Slave modes is identical, except in the case of the Sleep mode. Bit SREN is a “don't care” in Slave mode.

If receive is enabled by setting bit CREN prior to the SLEEP instruction, then a word may be received during Sleep. On completely receiving the word, the RSR register will transfer the data to the RCREG register and if enable bit RCIE bit is set, the interrupt generated will wake the chip from Sleep. If the global interrupt is enabled, the program will branch to the interrupt vector (0004h).

When setting up a Synchronous Slave Reception, follow these steps:

1. Enable the synchronous master serial port by setting bits SYNC and SPEN and clearing bit CSRC.
2. If interrupts are desired, set enable bit RCIE.
3. If 9-bit reception is desired, set bit RX9.
4. To enable reception, set enable bit CREN.
5. Flag bit RCIF will be set when reception is complete and an interrupt will be generated, if enable bit RCIE was set.
6. Read the RCSTA register to get the ninth bit (if enabled) and determine if any error occurred during reception.
7. Read the 8-bit received data by reading the RCREG register.
8. If any error occurred, clear the error by clearing bit CREN.
9. If using interrupts, ensure that GIE and PEIE (bits 7 and 6) of the INTCON register are set.

REGISTER 10-1: RCSTA – RECEIVE STATUS AND CONTROL REGISTER

R/W-0	R/W-0	R/W-0	R/W-0	R/W-0	R-0	R-0	R-x
SPEN	RX9	SREN	CREN	ADDEN	FERR	OERR	RX9D
bit 7							bit 0

Legend:			
R = Readable bit	W = Writable bit	U = Unimplemented bit, read as ‘0’	
-n = Value at POR	‘1’ = Bit is set	‘0’ = Bit is cleared	x = Bit is unknown

bit 7 **SPEN** [(1)]**:** Serial Port Enable bit
1 = Serial port enabled - configures GPB7/RX/DT/CCD and GPB6/TX/CK/AN7 pins as serial port pins
0 = Serial port disabled - module and its state machines held in Reset

bit 6 **RX9:** 9-bit Receive Enable bit
1 = Selects 9-bit reception
0 = Selects 8-bit reception

bit 5 **SREN:** Single Receive Enable bit
Asynchronous mode:
Unused in this mode - value ignored
Synchronous mode - master:
1 = Enables single receive
0 = Disables single receive
This bit is cleared after reception is complete.
Synchronous mode - slave:
Unused in this mode - value ignored

bit 4 **CREN:** Continuous Receive Enable bit
Asynchronous mode:
1 = Enables continuous receive until enable bit CREN is cleared
0 = Disables continuous receive
Synchronous mode:
1 = Enables continuous receive until enable bit CREN is cleared (CREN overrides SREN)
0 = Disables continuous receive

bit 3 **ADDEN:** Address Detect Enable bit
RX9 = 1:
1 = Enables address detection - enable interrupt and load of the receive buffer when the ninth bit in the receive buffer is set
0 = Disables address detection - all bytes are received, and ninth bit can be used as parity bit
RX9 = 0:
Unused in this mode

bit 2 **FERR:** Framing Error bit
1 = Framing error (can be updated by reading RCREG register and receive next valid byte)
0 = No framing error

bit 1 **OERR:** Overrun Error bit
1 = Overrun error (can be cleared by clearing bit CREN)
0 = No overrun error

bit 0 **RX9D**: 9th bit of received data (can be parity bit)

Note 1: The USART module automatically changes the pin from tri-state to drive as needed. Configure TRISC<5> = 1 and TRISC<4> = 1.

© 2015-2018 Microchip Technology Inc.

REGISTER 10-2: TXSTA – TRANSMIT STATUS AND CONTROL REGISTER

R/W-0	R/W-0	R/W-0	R/W-0	U-0	R/W-0	R-1	R/W-0
CSRC	TX9	TXEN	SYNC	—	BRGH	TRMT	TX9D
bit 7							bit 0

Legend:			
R = Readable bit	W = Writable bit	U = Unimplemented bit, read as ‘0’	
-n = Value at POR	‘1’ = Bit is set	‘0’ = Bit is cleared	x = Bit is unknown

bit 7 **CSRC:** Clock Source Select bit
Asynchronous mode:
Unused in this mode - value ignored
Synchronous mode:
1 = Master mode - Clock generated internally from BRG
0 = Slave mode - Clock from external source

bit 6 **TX9:** 9-bit Transmit Enable bit
1 = Selects 9-bit transmission
0 = Selects 8-bit transmission

bit 5 **TXEN** (1)**:** Transmit Enable bit
1 = Transmit enabled
0 = Transmit disabled

bit 4 **SYNC:** USART Mode Select bit
1 = Synchronous mode
0 = Asynchronous mode

bit 3 **Unimplemented:** Read as ‘0’

bit 2 **BRGH:** High Baud Rate Select bit
Asynchronous mode:
1 = High speed
0 = Low speed
Synchronous mode:
Unused in this mode - value ignored

bit 1 **TRMT:** Transmit Operation Idle Status bit
1 = Transmit Operation Idle
0 = Transmit Operation Active

bit 0 **TX9D:** 9th bit of transmit data; can be used as parity bit

Note 1: SREN/CREN overrides TXEN in Synchronous mode.

NOTES:

© 2015-2018 Microchip Technology Inc.

11.0 MEMORY ORGANIZATION

There are two types of memory in the MCP19116/7:

- Program Memory
- Data Memory
  - Special Function Registers (SFRs)
  - General Purpose RAM

11.1 Program Memory Organization

The MCP19116/7 devices have a 13-bit program counter capable of addressing an 8000 x 14 program memory space. The Reset vector is at 0000h and the Interrupt vector is at 0004h (refer to Figure 11-1). The width of the program memory bus (instruction word) is 14 bits. Since all instructions are a single word, the MCP19116/7 devices have space for 8000 instructions.

FIGURE 11-1: PROGRAM MEMORY MAP AND STACK FOR MCP19116/7

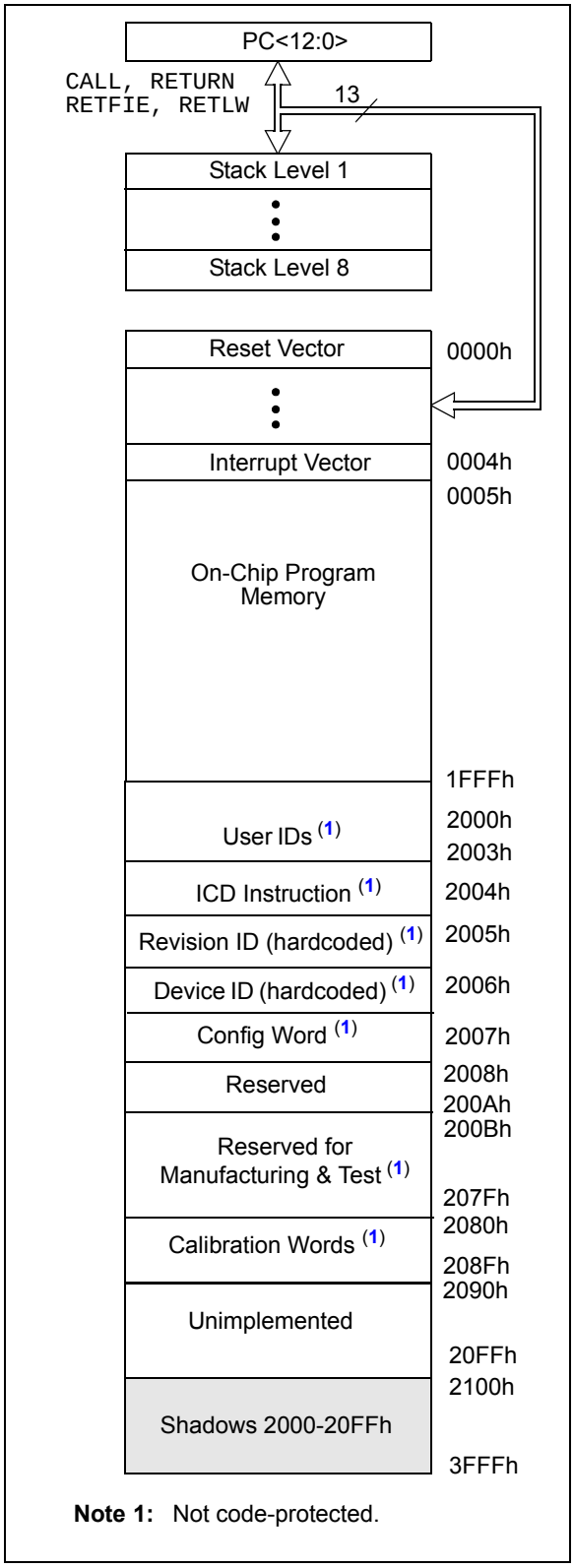

Note 1: Not code-protected.

11.1.1 READING PROGRAM MEMORY AS DATA

There are two methods of accessing constants in program memory:

- using tables of RETLW instructions.
- setting a Files Select Register (FSR) to point to the program memory.

11.1.1.1 RETLW Instruction

The RETLW instruction can be used to provide access to the tables of constants. The recommended way to create such tables is shown in Example 11-1.

EXAMPLE 11-1: RETLW INSTRUCTION

```
constants
    BRW                 ;Add Index in W to
                        ;program counter to
                        ;select data
    RETLW DATA0         ;Index0 data
    RETLW DATA1         ;Index1 data
    RETLW DATA2
    RETLW DATA3


my_function
    ;… LOTS OF CODE…
    MOVLW       DATA_INDEX
    call constants
    ;… THE CONSTANT IS IN W
```

The BRW instruction makes this type of table very simple to implement. If your code must remain portable with previous generations of microcontrollers, then the BRW instruction is not available, so the older table-read method must be used.

11.2 Data Memory Organization

The data memory (refer to Figure 11-1) is partitioned into four banks, which contain the General Purpose Registers (GPR) and the Special Function Registers (SFR). The Special Function Registers are located in the first 32 locations of each bank. Register locations 20h-7Fh in Bank 0, A0h-EFh in Bank 1, 120h-16Fh in Bank 2 and 1A0h-1EFh in Bank 3 are General Purpose Registers, implemented as static RAM. All other RAM is unimplemented and returns ‘0’ when read. The RP<1:0> bits in the STATUS register are the bank select bits.

EXAMPLE 11-2: BANK SELECT

RP1	RP0	
0	0	→ Bank 0 is selected
0	1	→ Bank 1 is selected
1	0	→ Bank 2 is selected
1	1	→ Bank 3 is selected

To move values from one register to another register, the value must pass through the W register. This means that for all register-to-register moves, two instruction cycles are required.

The entire data memory can be accessed either directly or indirectly. Direct addressing may require the use of the RP<1:0> bits. Indirect addressing requires the use of the FSR. Indirect addressing uses the Indirect Register Pointer (IRP) bit in the STATUS register for access to the Bank0/Bank1 or the Bank2/Bank3 areas of data memory.

11.2.1 GENERAL PURPOSE REGISTER FILE

The register file is organized as 64 x 8 in the MCP19116/7. Each register is accessed, either directly or indirectly, through the FSR (refer to **Section 11.5 “Indirect Addressing, INDF and FSR Registers”**).

© 2015-2018 Microchip Technology Inc.

11.2.2 CORE REGISTERS

The core registers contain the registers that directly affect the basic operation. The core registers can be addressed from any bank. These registers are listed in Table 11-1. For detailed information, refer to Table 11-2.

TABLE 11-1: CORE REGISTERS

Addresses	BANKx
x00h, x80h, x100h, or x180h	INDF
x02h, x82h, x102h, or x182h	PCL
x03h, x83h, x103h, or x183h	STATUS
x04h, x84h, x104h, or x184h	FSR
x0Ah, x8Ah, x10Ah, or x18Ah	PCLATH
x0Bh, x8Bh, x10Bh, or x18Bh	INTCON

11.2.2.1 STATUS Register

The STATUS register contains:

- the arithmetic status of the ALU
- the Reset status
- the bank select bits for data memory (RAM)

The STATUS register can be the destination for any instruction, like any other register. If the STATUS register is the destination for an instruction that affects the Z, DC or C bits, the `Write` to these three bits is disabled. These bits are set or cleared according to the device logic. Furthermore, the $\overline{TO}$ and $\overline{PD}$ bits are not writable. Therefore, the result of an instruction with the STATUS register as destination may be different than intended.

For example, `CLRF STATUS` will clear the upper three bits and set the Z bit. This leaves the STATUS register as '`000u u1uu`' (where u = unchanged).

It is recommended, therefore, that only `BCF`, `BSF`, `SWAPF` and `MOVWF` instructions be used to alter the STATUS register, because these instructions do not affect any Status bits.

> **Note:** The C and DC bits operate as $\overline{\text{Borrow}}$ and $\overline{\text{Digit Borrow}}$ out bits, respectively, in subtraction.

REGISTER 11-1: STATUS: STATUS REGISTER

R/W-0	R/W-0	R/W-0	R-1	R-1	R/W-x	R/W-x	R/W-x
IRP	RP1	RP0	$\overline{TO}$	$\overline{PD}$	Z	DC (1)	C (1)
bit 7							bit 0

Legend:		
R = Readable bit	W = Writable bit	U = Unimplemented bit, read as '0'
-n = Value at POR	x = Bit is unknown	'0' = Bit is cleared
'1' = Bit is set		

bit 7 **IRP:** Register Bank Select bit (used for Indirect addressing)
`1` = Bank 2 & 3 (100h - 1FFh)
`0` = Bank 0 & 1 (00h - FFh)

bit 6-5 **RP<1:0>:** Register Bank Select bits (used for Direct addressing)
`00` = Bank 0 (00h - 7Fh)
`01` = Bank 1 (80h - FFh)
`10` = Bank 2 (100h - 17Fh)
`11` = Bank 3 (180h - 1FFh)

bit 4 **$\overline{TO}$:** Time-Out bit
`1` = After power-up, `CLRWDT` instruction or `SLEEP` instruction
`0` = A WDT time out occurred

Note 1: For $\overline{\text{Borrow}}$, the polarity is reversed. A subtraction is executed by adding the two's complement of the second operand. For rotate (`RRF`, `RLF`) instructions, this bit is loaded with either the high-order or low-order bit in the source register.

REGISTER 11-1: STATUS: STATUS REGISTER (CONTINUED)

bit 3 **$\overline{\text{PD}}$:** Power-Down bit
1 = After power-up or by the CLRWDT instruction
0 = By execution of the SLEEP instruction

bit 2 **Z:** Zero bit
1 = The result of an arithmetic or logic operation is zero
0 = The result of an arithmetic or logic operation is not zero

bit 1 **DC:** Digit Carry/$\overline{\text{Digit Borrow}}$ bit [(1)] (ADDWF, ADDLW, SUBLW, SUBWF instructions)
1 = A carry-out from the 4th low-order bit of the result occurred
0 = No carry-out from the 4th low-order bit of the result

bit 0 **C:** Carry/$\overline{\text{Borrow}}$ bit [(1)] (ADDWF, ADDLW, SUBLW, SUBWF instructions) [(1)]
1 = A carry-out from the Most Significant bit of the result occurred
0 = No carry-out from the Most Significant bit of the result occurred

Note 1: For $\overline{\text{Borrow}}$, the polarity is reversed. A subtraction is executed by adding the two's complement of the second operand. For rotate (RRF, RLF) instructions, this bit is loaded with either the high-order or low-order bit in the source register.

11.2.3 SPECIAL FUNCTION REGISTERS

The Special Function Registers are registers used by the CPU and peripheral functions for controlling the desired operation of the device (refer to Figure 11-2). These registers are static RAM.

The special registers can be classified into two sets:

- core
- peripheral

The Special Function Registers associated with the microcontroller core are described in this section. Those related to the operation of the peripheral features are described in the associated section for that peripheral feature.

© 2015-2018 Microchip Technology Inc.

11.3 DATA MEMORY

FIGURE 11-2: MCP19116/7 DATA MEMORY MAP

	File Address		File Address		File Address		File Address
Indirect addr. (1)	00h	Indirect addr. (1)	80h	Indirect addr. (1)	100h	Indirect addr. (1)	180h
TMR0	01h	OPTION_REG	81h	TMR0	101h	OPTION_REG	181h
PCL	02h	PCL	82h	PCL	102h	PCL	182h
STATUS	03h	STATUS	83h	STATUS	103h	STATUS	183h
FSR	04h	FSR	84h	FSR	104h	FSR	184h
PORTGPA	05h	TRISGPA	85h	WPUGPA	105h	IOCA	185h
PORTGPB	06h	TRISGPB	86h	WPUGPB	106h	IOCB	186h
PIR1	07h	PIE1	87h	PE1	107h	ANSELA	187h
PIR2	08h	PIE2	88h	MODECON	108h	ANSELB	188h
PCON	09h		89h	ABECON	109h		189h
PCLATH	0Ah	PCLATH	8Ah	PCLATH	10Ah	PCLATH	18Ah
INTCON	0Bh	INTCON	8Bh	INTCON	10Bh	INTCON	18Bh
TMR1L	0Ch		8Ch	Reserved	10Ch	PORTICD (2)	18Ch
TMR1H	0Dh		8Dh		10Dh	TRISICD (2)	18Dh
T1CON	0Eh		8Eh		10Eh	ICKBUG (2)	18Eh
TMR2	0Fh		8Fh		10Fh	BIGBUG (2)	18Fh
T2CON	10h	VINUVLO	90h	SSPADD	110h	PMCON1	190h
PR2	11h	VINOVLO	91h	SSPBUF	111h	PMCON2	191h
	12h	VINCON	92h	SSPCON1	112h	PMADRL	192h
PWMPHL	13h	CC1RL	93h	SSPCON2	113h	PMADRH	193h
PWMPHH	14h	CC1RH	94h	SSPCON3	114h	PMDATL	194h
PWMRL	15h	CC2RL	95h	SSPMSK1	115h	PMDATH	195h
PWMRH	16h	CC2RH	96h	SSPSTAT	116h	DSTCAL	196h
	17h	CCDCON	97h	SSPADD2	117h	RFBTCAL	197h
	18h	DESATCON	98h	SSPMSK2	118h	OSCCAL	198h
VREFCON	19h	OVCON	99h	VRSPCAL	119h	DCSCAL	199h
VREF2CON	1Ah	OVREFCON	9Ah	VR2SPCAL	11Ah	TTACAL	19Ah
OSCTUNE	1Bh	DEADCON	9Bh	SPBRG	11Bh	BGRCAL	19Bh
ADRESL	1Ch	SLPCRCON	9Ch	RCREG	11Ch	EAOFFCAL	19Ch
ADRESH	1Dh	ICOACON	9Dh	TXREG	11Dh	AVDDCAL	19Dh
ADCON0	1Eh	ICLEBCON	9Eh	TXSTA	11Eh	A2GCAL	19Eh
ADCON1	1Fh		9Fh	RCSTA	11Fh	OVRSPCAL	19Fh
General Purpose Register 96 Bytes	20h	General Purpose Register 80 Bytes	A0h	General Purpose Register 80 bytes	120h	General Purpose Register 80 bytes	1A0h
			EFh		16F		1EF
		Accesses Bank 0	F0h	Accesses Bank 0	170h	Accesses Bank 0	1F0h
	7Fh		FFh		17Fh		1FFh
Bank 0		Bank 1		Bank2		Bank3	

Unimplemented data memory locations, read as '0'.

Note 1: Not a physical register.

2: Only accessible when $\overline{\text{DBGEN}}$ = 0 and ICKBUG<INBUG> = 1.

TABLE 11-2: MCP19116/7 SPECIAL REGISTERS SUMMARY BANK 0

Addr.	Name	Bit 7	Bit 6	Bit 5	Bit 4	Bit 3	Bit 2	Bit 1	Bit 0	Value on POR Reset	Value on all other resets [1]
Bank 0											
00h	INDF	Addressing this location uses contents of FSR to address data memory (not a physical register)								xxxx xxxx	xxxx xxxx
01h	TMR0	Timer0 Module's Register								xxxx xxxx	uuuu uuuu
02h	PCL	Program Counter's (PC) Least Significant byte								0000 0000	0000 0000
03h	STATUS	IRP	RP1	RP0	$\overline{TO}$	$\overline{PD}$	Z	DC	C	0001 1xxx	000q quuu
04h	FSR	Indirect data memory address pointer								xxxx xxxx	uuuu uuuu
05h	PORTGPA	GPA7	GPA6	GPA5	—	GPA3	GPA2	GPA1	GPA0	xxx- xxxx	uuu- uuuu
06h	PORTGPB	GPB7	GPB6	GPB5	GPB4	—	—	GPB1	GPB0	xxxx --xx	uuuu --uu
07h	PIR1	TXIF	RCIF	BCLIF	SSPIF	CC2IF	CC1IF	TMR2IF	TMR1IF	0000 0000	0000 0000
08h	PIR2	CDSIF	ADIF	—	OTIF	OVIF	DRUVIF	OVLOIF	UVLOIF	00-0 0000	00-0 0000
09h	PCON	ADC_REFR	—	—	—	$\overline{VDDFLAG}$	VDDOK	$\overline{POR}$	$\overline{BOR}$	0--- 10qq	0--- 10uu
0Ah	PCLATH	—	—	—	Write buffer for upper 5 bits of program counter					---0 0000	---0 0000
0Bh	INTCON	GIE	PEIE	T0IE	INTE	IOCE	T0IF	INTF	IOCF [2]	0000 000x	0000 000u
0Ch	TMR1L	Holding register for the Least Significant byte of the 16-bit TMR1								xxxx xxxx	uuuu uuuu
0Dh	TMR1H	Holding register for the Most Significant byte of the 16-bit TMR1								xxxx xxxx	uuuu uuuu
0Eh	T1CON	—	—	T1CKPS1	T1CKPS0	—	—	TMR1CS	TMR1ON	--00 --00	--uu --uu
0Fh	TMR2	Timer2 Module Register								0000 0000	uuuu uuuu
10h	T2CON	—	—	—	—	—	TMR2ON	T2CKPS1	T2CKPS0	---- -000	---- -000
11h	PR2	Timer2 Module Period Register								1111 1111	1111 1111
12h	—	Unimplemented								–	–
13h	PWMPHL	SLAVE Phase Shift Register								xxxx xxxx	uuuu uuuu
14h	PWMPHH	SLAVE Phase Shift Register								xxxx xxxx	uuuu uuuu
15h	PWMRL	PWM Register Low Byte								xxxx xxxx	uuuu uuuu
16h	PWMRH	PWM Register High Byte								xxxx xxxx	uuuu uuuu
17h	—	Unimplemented								–	–
18h	—	Unimplemented								–	–
19h	VREFCON	VREF7	VREF6	VREF5	VREF4	VREF3	VREF2	VREF1	VREF0	0000 0000	0000 0000
1Ah	VREF2CON	VREF27	VREF26	VREF25	VREF24	VREF23	VREF22	VREF21	VREF20	0000 0000	0000 0000
1Bh	OSCTUNE	—	—	—	TUN4	TUN3	TUN2	TUN1	TUN0	---0 0000	---0 0000
1Ch	ADRESL	Least significant 8 bits of the A/D result								xxxx xxxx	uuuu uuuu
1Dh	ADRESH	Most significant 2 bits of the A/D result								0000 00xx	0000 00uu
1Eh	ADCON0	—	CHS4	CHS3	CHS2	CHS1	CHS0	GO/$\overline{DONE}$	ADON	-000 0000	-000 0000
1Fh	ADCON1	—	ADCS2	ADCS1	ADCS0	—	—	—	VCFG	-000 ---0	-000 ---0

Legend: — = Unimplemented locations read as '0', u = unchanged, x = unknown, q = value depends on condition, shaded = unimplemented

Note 1: Other (non power-up) resets include $\overline{MCLR}$ Reset and Watchdog Timer Reset during normal operation.

2: $\overline{MCLR}$ and WDT reset does not affect the previous value data latch. The IOCF bit will be cleared upon reset but will be set again if the mismatch exists.

© 2015-2018 Microchip Technology Inc.

TABLE 11-3: MCP19116/7 SPECIAL REGISTERS SUMMARY BANK 1

Addr.	Name	Bit 7	Bit 6	Bit 5	Bit 4	Bit 3	Bit 2	Bit 1	Bit 0	Value on POR Reset	Values on all other resets (1)
Bank 1											
80h	INDF	Addressing this location uses contents of FSR to address data memory (not a physical register)								xxxx xxxx	uuuu uuuu
81h	OPTION_REG	$\overline{\text{RAPU}}$	INTEDG	T0CS	T0SE	PSA	PS2	PS1	PS0	1111 1111	1111 1111
82h	PCL	Program Counter's (PC) Least Significant byte								0000 0000	0000 0000
83h	STATUS	IRP	RP1	RP0	$\overline{\text{TO}}$	$\overline{\text{PD}}$	Z	DC	C	0001 1xxx	000q quuu
84h	FSR	Indirect data memory address pointer								xxxx xxxx	uuuu uuuu
85h	TRISGPA	TRISA7	TRISA6	TRISA5	—	TRISA3	TRISA2	TRISA1	TRISA0	1110 1111	1110 1111
86h	TRISGPB	TRISB7	TRISB6	TRISB5	TRISB4	—	—	TRISB1	TRISB0	1111 0011	1111 0011
87h	PIE1	TXIE	RCIE	BCLIE	SSPIE	CC2IE	CC1IE	TMR2IE	TMR1IE	0000 0000	0000 0000
88h	PIE2	CDSIE	ADIE	—	OTIE	OVIE	DRUVIE	OVLOIE	UVLOIE	00-0 0000	00-0 0000
89h	—	Unimplemented								—	—
8Ah	PCLATH	—	—	—	Write buffer for upper 5 bits of program counter					---0 0000	---0 0000
8Bh	INTCON	GIE	PEIE	T0IE	INTE	IOCE	T0IF	INTF	IOCF (2)	0000 000x	0000 000u
8Ch	—	Unimplemented								—	—
8Dh	—	Unimplemented								—	—
8Eh	—	Unimplemented								—	—
8Fh	—	Unimplemented								—	—
90h	VINUVLO	—	—	UVLO5	UVLO4	UVLO3	UVLO2	UVLO1	UVLO0	--xx xxxx	--uu uuuu
91h	VINOVLO	—	—	OVLO5	OVLO4	OVLO3	OVLO2	OVLO1	OVLO0	--xx xxxx	--uu uuuu
92h	VINCON	UVLOEN	UVLOOUT	UVLOINTP	UVLOINTN	OVLOEN	OVLOOUT	OVLOINTP	OVLOINTN	0x00 0x00	0u00 0u00
93h	CC1RL	Capture1/Compare1 Register1 x Low Byte (LSB)								xxxx xxxx	uuuu uuuu
94h	CC1RH	Capture1/Compare1 Register2 x High Byte (MSB)								xxxx xxxx	uuuu uuuu
95h	CC2RL	Capture2/Compare2 Register1 x Low Byte (LSB)								xxxx xxxx	uuuu uuuu
96h	CC2RH	Capture2/Compare2 Register2 x High Byte (MSB)								xxxx xxxx	uuuu uuuu
97h	CCDCON	CC2M<3:0>				CC1M<3:0>				xxxx xxxx	uuuu uuuu
98h	DESATCON	CDSMUX	CDSWDE	Reserved	CDSPOL	CDSOE	CDSOUT	CDSINTP	CDSINTN	0000 0x00	0000 0u00
99h	OVCON	—	—	—	—	OVEN	OVOUT	OVINTP	OVINTN	---- 0x00	---- 0u00
9Ah	OVREFCON	OOV7	OOV6	OOV5	OOV4	OOV3	OOV2	OOV1	OOV0	xxxx xxxx	uuuu uuuu
9Bh	DEADCON	PDRVDT3	PDRVDT2	PDRVDT1	PDRVDT0	SDRVDT3	SDRVDT2	SDRVDT1	SDRVDT0	xxxx xxxx	uuuu uuuu
9Ch	SLPCRCON	—	SLPBY	SLPS5	SLPS4	SLPS3	SLPS2	SLPS1	SLPS0	-xxx xxxx	-uuu uuuu
9Dh	ICOACON	—	—	—	—	ICOAC3	ICOAC2	ICOAC1	ICOAC0	---- xxxx	---- uuuu
9Eh	ICLEBCON	—	—	—	—	—	—	ICLEBC1	ICLEBC0	---- --xx	---- --uu
9Fh	—	Unimplemented								—	—

Legend: — = Unimplemented locations read as ‘0’, u = unchanged, x = unknown, q = value depends on condition, shaded = unimplemented

Note 1: Other (non power-up) resets include $\overline{\text{MCLR}}$ Reset and Watchdog Timer Reset during normal operation.

2: $\overline{\text{MCLR}}$ and WDT reset does not affect the previous value data latch. The IOCF bit will be cleared upon reset but will be set again if the mismatch exists.

© 2015-2018 Microchip Technology Inc.

TABLE 11-4: MCP19116/7 SPECIAL REGISTERS SUMMARY BANK 2

Addr.	Name	Bit 7	Bit 6	Bit 5	Bit 4	Bit 3	Bit 2	Bit 1	Bit 0	Value on POR Reset	Value on all other resets [1]
Bank 2											
100h	INDF	Addressing this location uses contents of FSR to address data memory (not a physical register)								xxxx xxxx	xxxx xxxx
101h	TMR0	Timer0 Module's Register								xxxx xxxx	uuuu uuuu
102h	PCL	Program Counter's (PC) Least Significant byte								0000 0000	0000 0000
103h	STATUS	IRP	RP1	RP0	$\overline{TO}$	$\overline{PD}$	Z	DC	C	0001 1xxx	000q quuu
104h	FSR	Indirect data memory address pointer								xxxx xxxx	uuuu uuuu
105h	WPUGPA	—	—	WPUA5	—	WPUA3	WPUA2	WPUA1	WPUA0	--1- 1111	--u- uuuu
106h	WPUGPB	WPUB7	WPUB6	WPUB5	WPUB4	—	—	WPUB1	—	1111 --1-	uuuu --u-
107h	PE1	PDRVEN	SDRVEN	PDRVBY	SDRVBY	—	ISPUEN	PWMSTR_PEN	PWMSTR_SEN	0000 -100	0000 -100
108h	MODECON	MSC1	MSC0	RFB	—	MSC2	—	—	—	001- 0---	001- 0---
109h	ABECON	DIGOEN	DSEL2	DSEL1	DSEL0	DRUVSEL	—	EADIS	ANAOEN	0000 0-00	0000 0-00
10Ah	PCLATH	—	—	—	Write buffer for upper 5 bits of program counter					---0 0000	---0 0000
10Bh	INTCON	GIE	PEIE	T0IE	INTE	IOCE	T0IF	INTF	IOCF [2]	0000 000x	0000 000u
10Ch	—	Reserved								–	–
10Dh	—	Unimplemented								–	–
10Eh	—	Unimplemented								–	–
10Fh	—	Unimplemented								–	–
110h	SSPADD	ADD<7:0>								0000 0000	0000 0000
111h	SSPBUF	Synchronous Serial Port Receive Buffer/Transmit Register								xxxx xxxx	uuuu uuuu
112h	SSPCON1	WCOL	SSPOV	SSPEN	CKP	SSPM<3:0>				0000 0000	0000 0000
113h	SSPCON2	GCEN	ACKSTAT	ACKDT	ACKEN	RCEN	PEN	RSEN	SEN	0000 0000	0000 0000
114h	SSPCON3	ACKTIM	PCIE	SCIE	BOEN	SDAHT	SBCDE	AHEN	DHEN	0000 0000	0000 0000
115h	SSPMSK1	MSK<7:0>								1111 1111	1111 1111
116h	SSPSTAT	SMP	CKE	D/$\overline{A}$	P	S	R/$\overline{W}$	UA	BF	–	–
117h	SSPADD2	ADD2<7:0>								0000 0000	0000 0000
118h	SSPMSK2	MSK2<7:0>								1111 1111	1111 1111
119h	VRSPCAL	—	—	—	VRSPCAL4	VRSPCAL3	VRSPCAL2	VRSPCAL1	VRSPCAL0	---x xxxx	---u uuuu
11Ah	VR2SPCAL	—	—	—	VR2SP-CAL4	VR2SP-CAL3	VR2SP-CAL2	VR2SPCAL1	VR2SPCAL0	---x xxxx	---u uuuu
11Bh	SPBRG	SPBRG7	SPBRG6	SPBRG5	SPBRG4	SPBRG3	SPBRG2	SPBRG1	SPBRG0	0000 0000	0000 0000
11Ch	RCREG	USART Receive Data Register								0000 0000	0000 0000
11Dh	TXREG	USART Transmit Data Register								0000 0000	0000 0000
11Eh	TXSTA	CSRC	TX9	TXEN	SYNC	—	BRGH	TRMT	TX9D	0000 0000	0000 0000
11Fh	RCSTA	SPEN	RX9	SREN	CREN	ADDEN	FERR	OERR	RX9D	0000 0000	0000 0000

Legend: — = Unimplemented locations read as '0', u = unchanged, x = unknown, q = value depends on condition, shaded = unimplemented

Note 1: Other (non power-up) resets include $\overline{MCLR}$ Reset and Watchdog Timer Reset during normal operation.

2: $\overline{MCLR}$ and WDT reset does not affect the previous value data latch. The IOCF bit will be cleared upon reset but will be set again if the mismatch exists.

© 2015-2018 Microchip Technology Inc.

TABLE 11-5: MCP19116/7 SPECIAL REGISTERS SUMMARY BANK 3

Addr.	Name	Bit 7	Bit 6	Bit 5	Bit 4	Bit 3	Bit 2	Bit 1	Bit 0	Value on POR Reset	Values on all other resets [1]
Bank 3											
180h	INDF	Addressing this location uses contents of FSR to address data memory (not a physical register)								xxxx xxxx	uuuu uuuu
181h	OPTION_REG	$\overline{\text{RAPU}}$	INTEDG	T0CS	T0SE	PSA	PS2	PS1	PS0	1111 1111	1111 1111
182h	PCL	Program Counter's (PC) Least Significant byte								0000 0000	0000 0000
183h	STATUS	IRP	RP1	RP0	$\overline{\text{TO}}$	$\overline{\text{PD}}$	Z	DC	C	0001 1xxx	000q quuu
184h	FSR	Indirect data memory address pointer								xxxx xxxx	uuuu uuuu
185h	IOCA	IOCA7	IOCA6	IOCA5	—	IOCA3	IOCA2	IOCA1	IOCA0	000- 0000	0000 0000
186h	IOCB	IOCB7	IOCB6	IOCB5	IOCB4	—	—	IOCB1	IOCB0	0000 --00	0000 --00
187h	ANSELA	—	—	—	—	ANSA3	ANSA2	ANSA1	ANSA0	---- 1111	---- 1111
188h	ANSELB	—	ANSB6	ANSB5	ANSB4	—	—	ANSB1	—	-111 --1-	-111 --1-
189h	—	Unimplemented								—	—
18Ah	PCLATH	—	—	—	Write buffer for upper 5 bits of program counter					---0 0000	---0 0000
18Bh	INTCON	GIE	PEIE	T0IE	INTE	IOCE	T0IF	INTF	IOCF [2]	0000 000x	0000 000u
18Ch	PORTICD [3]	In-Circuit Debug Port Register								xxx --xx	uuuu --uu
18Dh	TRISICD [3]	In-Circuit Debug TRIS Register								1111 0011	1111 0011
18Eh	ICKBUG [3]	In-Circuit Debug Register								0000 0000	000u uuuu
18Fh	BIGBUG [3]	In-Circuit Debug Breakpoint Register								0000 0000	uuuu uuuu
190h	PMCON1	—	CALSEL	—	—	—	WREN	WR	RD	-0-- -000	-0-- -000
191h	PMCON2	Program Memory Control Register 2 (not a physical register)								---- ----	---- ----
192h	PMADRL	PMADRL7	PMADRL6	PMADRL5	PMADRL4	PMADRL3	PMADRL2	PMADRL1	PMADRL0	0000 0000	0000 0000
193h	PMADRH	—	—	—	—	PMADRH3	PMADRH2	PMADRH1	PMADRH0	---- -000	---- -000
194h	PMDATL	PMDATL7	PMDATL6	PMDATL5	PMDATL4	PMDATL3	PMDATL2	PMDATL1	PMDATL0	0000 0000	0000 0000
195h	PMDATH	—	—	PMDATH5	PMDATH4	PMDATH3	PMDATH2	PMDATH1	PMDATH0	--00 0000	--00 0000
196h	DSTCAL	—	—	—	DSTCAL4	DSTCAL3	DSTCAL2	DSTCAL1	DSTCAL0	---x xxxx	---u uuuu
197h	RFBTCAL	—	—	RFBCAL5	RFBCAL4	RFBCAL3	RFBCAL2	RFBCAL1	RFBCAL0	--xx xxxx	--uu uuuu
198h	OSCCAL	—	FCALT6	FCALT5	FCALT4	FCALT3	FCALT2	FCALT1	FCALT0	-xxx xxxx	-uuu uuuu
199h	DCSCAL	—	DCSCAL6	DCSCAL5	DCSCAL4	DCSCAL3	DCSCAL2	DCSCAL1	DCSCAL0	-xxx xxxx	-uuu uuuu
19Ah	TTACAL	—	—	—	—	TTA3	TTA2	TTA1	TTA0	---- xxxx	---- uuuu
19Bh	BGRCAL	—	—	—	BGRT4	BGRT3	BGRT2	BGRT1	BGRT0	---x xxxx	---u uuuu
19Ch	EAOFFCAL	—	—	—	EAOFFCAL4	EAOFFCAL3	EAOFFCAL2	EAOFFCAL1	EAOFFCAL0	---x xxxx	---u uuuu
19Dh	AVDDCAL	—	—	—	—	AVDDCAL3	AVDDCAL2	AVDDCAL1	AVDDCAL0	---- xxxx	---- uuuu
19Eh	A2GCAL	—	—	—	—	A2GCAL3	A2GCAL2	A2GCAL1	A2GCAL0	---- xxxx	---- uuuu
19Fh	OVRSPCAL	—	—	—	OVRSPCAL4	OVRSPCAL3	OVRSPCAL2	OVRSPCAL1	OVRSPCAL0	---x xxxx	---u uuuu

Legend: — = Unimplemented locations read as '0', u = unchanged, x = unknown, q = value depends on condition, shaded = unimplemented

Note 1: Other (non power-up) resets include $\overline{\text{MCLR}}$ Reset and Watchdog Timer Reset during normal operation.

2: $\overline{\text{MCLR}}$ and WDT reset does not affect the previous value data latch. The IOCF bit will be cleared upon reset but will be set again if the mismatch exists.

3: Only accessible when $\overline{\text{DBGEN}}$ = 0 and ICKBUG<INBUG> = 1.

© 2015-2018 Microchip Technology Inc.

11.3.1 OPTION_REG REGISTER

The OPTION_REG register is a readable and writable register, which contains various control bits to configure:

- Timer0/WDT prescaler
- External GPA2/INT interrupt
- Timer0
- Weak pull-ups on PORTGPA and PORTGPB

Note: To achieve a 1:1 prescaler assignment for Timer0, assign the prescaler to the WDT by setting PSA bit to ‘1’ in the OPTION_REG register. Refer to **Section 23.1.3 “Software Programmable Prescaler”**.

REGISTER 11-2: OPTION_REG: OPTION REGISTER

R/W-1	R/W-1	R/W-1	R/W-1	R/W-1	R/W-1	R/W-1	R/W-1
$\overline{\text{RAPU}}$	INTEDG	T0CS	T0SE	PSA	PS2	PS1	PS0
bit 7							bit 0

Legend:		
R = Readable bit	W = Writable bit	U = Unimplemented bit, read as ‘0’
-n = Value at POR	x = Bit is unknown	‘0’ = Bit is cleared
‘1’ = Bit is set		

bit 7 **$\overline{\text{RAPU}}$:** Port GPx Pull-Up Enable bit [1]
- 1 = Port GPx pull-ups are disabled
- 0 = Port GPx pull-ups are enabled

bit 6 **INTEDG:** Interrupt Edge Select bit
- 1 = Interrupt on rising edge of INT pin
- 0 = Interrupt on falling edge of INT pin

bit 5 **T0CS:** TMR0 Clock Source Select bit
- 1 = Transition on T0CKI pin
- 0 = Internal instruction cycle clock

bit 4 **T0SE:** TMR0 Source Edge Select bit
- 1 = Increment on high-to-low transition on T0CKI pin
- 0 = Increment on low-to-high transition on T0CKI pin

bit 3 **PSA:** Prescaler Assignment bit
- 1 = Prescaler is assigned to WDT
- 0 = Prescaler is assigned to the Timer0 module

bit 2-0 **PS<2:0>:** Prescaler Rate Select bits

Bit Value	TMR0 Rate	WDT Rate
000	1: 2	1: 1
001	1: 4	1: 2
010	1: 8	1: 4
011	1: 16	1: 8
100	1: 32	1: 16
101	1: 64	1: 32
110	1: 128	1: 64
111	1: 256	1: 128

Note 1: Individual WPUx bit must also be enabled.

© 2015-2018 Microchip Technology Inc.

11.4 PCL and PCLATH

The Program Counter (PC) is 13 bits wide. The low byte comes from the PCL register, which is a readable and writable register. The high byte (PC<12:8>) is not directly readable or writable and comes from PCLATH. On any reset, the PC is cleared. Figure 11-3 shows the two situations for loading the PC:

- the upper example shows how the PC is loaded on a write to PCL (PCLATH <4:0> → PCH)
- the lower example shows how the PC is loaded during a `CALL` or `GOTO` instruction (PCLATH<4:3> → PCH).

FIGURE 11-3: PROGRAM COUNTER (PC) LOADING IN DIFFERENT SITUATIONS

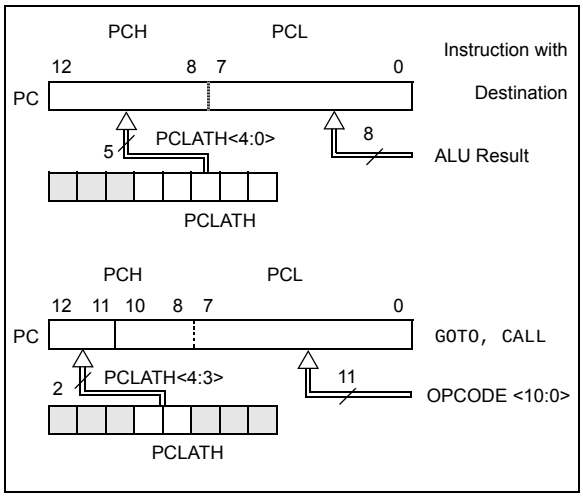

11.4.1 MODIFYING PCL REGISTER

Executing any instruction with the PCL register as the destination simultaneously causes the Program Counter PC<12:8> bits (PCH) to be replaced by the contents of the PCLATH register. This allows the entire contents of the program counter to be changed by writing the desired upper five bits to the PCLATH register. When the lower eight bits are written to the PCL register, all 13 bits of the program counter will change to the values contained in the PCLATH register and those being written to the PCL register.

11.4.2 COMPUTED GOTO

A computed `GOTO` is accomplished by adding an offset to the program counter (`ADDWF PCL`). Care should be exercised when jumping into a look-up table or program branch table (computed `GOTO`) by modifying the PCL register. Assuming that PCLATH is set to the table start address, if the table length is greater than 255 instructions or if the lower eight bits of the memory address roll over from 0xFFh to 0X00h in the middle of the table, then PCLATH must be incremented for each address rollover that occurs between the table beginning and the table location within the table.

For more information, refer to Application Note AN556, *"Implementing a Table Read"* (DS00000556).

11.4.3 COMPUTED FUNCTION CALLS

A computed function `CALL` allows programs to maintain tables of functions and provide another way to execute state machines or look-up tables. When performing a table-read using a computed function `CALL`, care should be exercised if the table location crosses a PCL memory boundary (each 256-byte block).

If using the `CALL` instruction, the PCH<2:0> and PCL registers are loaded with the operand of the `CALL` instruction. PCH<4:3> is loaded with PCLATH<4:3>.

11.4.4 STACK

The MCP19116/7 devices have an 8-level x 13-bit wide hardware stack (refer to Figure 11-1). The stack space is not part of either program or data space and the Stack Pointer is not readable or writable. The PC is PUSHed onto the stack when a `CALL` instruction is executed or an interrupt causes a branch. The stack is POPed in the event of a `RETURN`, `RETLW` or a `RETFIE` instruction execution. PCLATH is not affected by a PUSH or POP operation.

The stack operates as a circular buffer. This means that after the stack has been PUSHed eight times, the 9th push overwrites the value that was stored from the first push. The tenth push overwrites the second push (and so on).

> **Note 1:** There are no Status bits to indicate Stack Overflow or Stack Underflow conditions.
>
> **2:** There are no instructions/mnemonics called PUSH or POP. These are actions that occur from the execution of the `CALL`, `RETURN`, `RETLW` and `RETFIE` instructions or the vectoring to an interrupt address.

11.5 Indirect Addressing, INDF and FSR Registers

The INDF register is not a physical register. Addressing the INDF register will cause indirect addressing.

Indirect addressing is possible by using the INDF register (see Table 11-1). Any instruction using the INDF register actually accesses data pointed to by the File Select Register (FSR). Reading INDF itself indirectly will produce 00h. Writing to the INDF register directly results in a `NO OPERATION` (`NOP`) (although Status bits may be affected). An effective 9-bit address is obtained by concatenating the 8-bit FSR and the IRP bit in the STATUS register, as shown in Figure 11-4.

A simple program to clear RAM location 40h-7Fh using indirect addressing is shown in Example 11-3.

EXAMPLE 11-3: INDIRECT ADDRESSING

```
        MOVLW   0x40    ;initialize pointer
        MOVWF   FSR     ;to RAM
NEXT    CLRF    INDF    ;clear INDF register
        INCF    FSR     ;inc pointer
        BTFSS   FSR,7   ;all done?
        GOTO    NEXT    ;no clear next
CONTINUE                ;yes continue
```

FIGURE 11-4: DIRECT/INDIRECT ADDRESSING

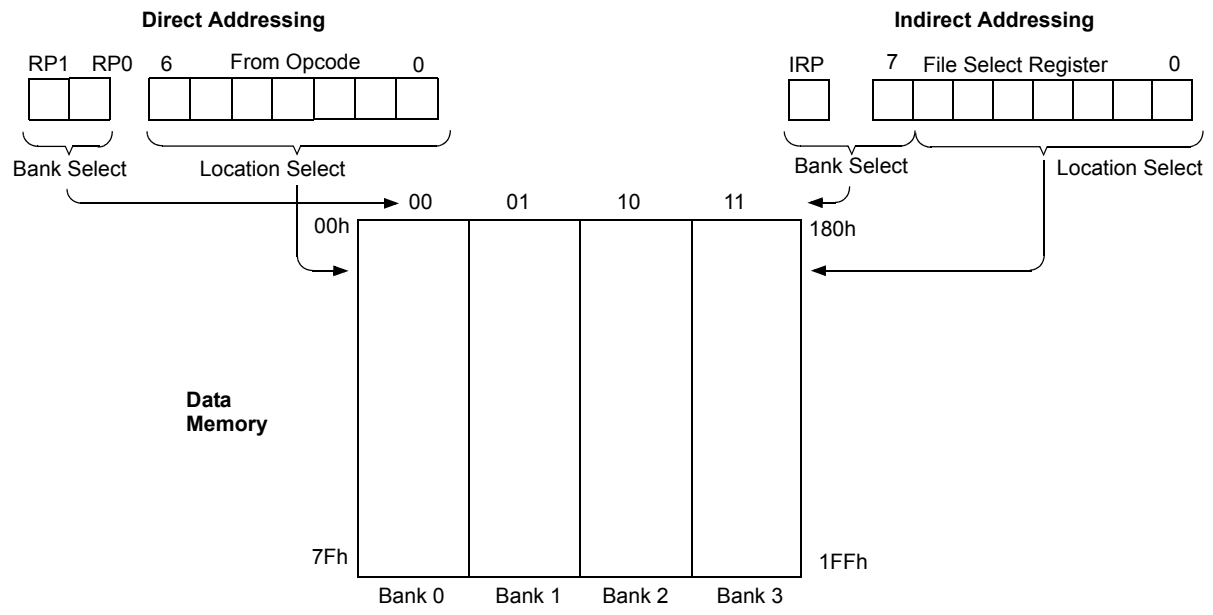

For memory map detail, refer to Figure 11-2.

© 2015-2018 Microchip Technology Inc.

12.0 DEVICE CONFIGURATION

Device Configuration consists of Configuration Word, Code Protection and Device ID.

Note: The $\overline{\text{DBGEN}}$ bit in Configuration Word is managed automatically by device development tools, including debuggers and programmers. For normal device operation, this bit should be maintained as a '1'. Debug is available only on the MCP19117.

12.1 Configuration Word

There are several Configuration Word bits that allow different timers to be enabled and memory protection options. These are implemented as Configuration Word at 2007h.

REGISTER 12-1: CONFIG: CONFIGURATION WORD

R/P-1	U-1	R/P-1	R/P-1	U-1	R/P-1
$\overline{\text{DBGEN}}$	—	WRT1	WRT0	—	BOREN (1)
bit 13					bit 8

U-1	R/P-1	R/P-1	R/P-1	R/P-1	U-1	U-1	U-1
—	$\overline{\text{CP}}$	MCLRE	$\overline{\text{PWRTE}}$ (1)	WDTE	—	—	—
bit 7							bit 0

Legend:			
R = Readable bit	W = Writable bit	U = Unimplemented bit, read as ‘1’	
-n = Value at POR	‘1’ = Bit is set	‘0’ = Bit is cleared	x = Bit is unknown

bit 13 **$\overline{\text{DBGEN}}$:** ICD Debug bit
1 = ICD debug mode disabled
0 = ICD debug mode enabled

bit 12 **Unimplemented:** Read as ‘0’

bit 11-10 **WRT<1:0>:** Flash Program Memory Self-Write Enable bit
11 = Write protection off
10 = 000h to 7FFh write protected, 800h to 1FFFh may be modified by PMCON1 control
01 = 000h to FFFh write protected, 1000h to 1FFFh may be modified by PMCON1 control
00 = 000h to 1FFFh write protected, entire program memory is write protected.

bit 9 **Unimplemented:** Read as ‘1’

bit 8 **BOREN:** Brown-out Reset Enable bit (1)
1 = BOR disabled during Sleep and Enabled during operation
0 = BOR disabled

bit 7 **Unimplemented:** Read as ‘1’

bit 6 **$\overline{\text{CP}}$:** Code Protection
1 = Program memory is not code protected
0 = Program memory is external read and write protected

bit 5 **MCLRE:** $\overline{\text{MCLR}}$ Pin Function Select
1 = $\overline{\text{MCLR}}$ pin is $\overline{\text{MCLR}}$ function and weak internal pull-up is enabled
0 = $\overline{\text{MCLR}}$ pin is alternate function, $\overline{\text{MCLR}}$ function is internally disabled

bit 4 **$\overline{\text{PWRTE}}$:** Power-Up Timer Enable bit (1)
1 = PWRT disabled
0 = PWRT enabled

bit 3 **WDTE:** Watchdog Timer Enable bit
1 = WDT enabled
0 = WDT disabled

bit 2-0 **Unimplemented:** Read as ‘1’

Note 1: Enabling Brown-out Reset does not automatically enable the Power-up Timer.

12.2 Code Protection

Code protection allows the device to be protected from unauthorized access. Internal access to the program memory is unaffected by any code protection setting.

12.2.1 PROGRAM MEMORY PROTECTION

The entire program memory space is protected from external reads and writes by the $\overline{CP}$ bit in the Configuration Word. When $\overline{CP}$ = 0, external reads and writes of program memory are inhibited and a read will return all '0's. The CPU can continue to read program memory, regardless of the protection bit settings. Writing the program memory is dependent upon the write protection setting. Refer to **Section 12.3 "Write Protection"** for more information.

12.3 Write Protection

Write protection allows the device to be protected from unintended self-writes. Applications, such as boot loader software, can be protected while allowing other regions of the program memory to be modified.

The WRT<1:0> bits in the Configuration Word define the size of the program memory block that is protected.

12.4 ID Locations

Four memory locations (2000h-2003h) are designated as ID locations where the user can store checksum or other code identification numbers. These locations are not accessible during normal execution but are readable and writable during Program/Verify mode. Only the Least Significant 7 bits of the ID locations are reported when using MPLAB Integrated Development Environment (IDE).

© 2015-2018 Microchip Technology Inc.

13.0 OSCILLATOR MODES

The MCP19116/7 devices have one oscillator configuration which is an 8 MHz internal oscillator.

13.1 Internal Oscillator (INTOSC)

The Internal Oscillator module provides a system clock source of 8 MHz. The frequency of the internal oscillator can be trimmed with a calibration value in the OSCTUNE register.

13.2 Oscillator Calibration

The 8 MHz internal oscillator is factory-calibrated. The factory calibration values reside in the read-only CALWD6 register. These values must be read from the CALWD6 register and stored in the OSCCAL register. Refer to **Section 18.0 "Flash Program Memory Control"** for the procedure on reading the program memory.

> **Note:** The FCAL<6:0> bits in the CALWD6 register must be written into the OSCCAL register to calibrate the internal oscillator.

13.3 Frequency Tuning in User Mode

In addition to the factory calibration, the base frequency can be tuned in the user's application. This frequency tuning capability allows the user to deviate from the factory-calibrated frequency. The user can tune the frequency by writing to the OSCTUNE register (refer to Register 13-1).

REGISTER 13-1: OSCTUNE: OSCILLATOR TUNING REGISTER

U-0	U-0	U-0	R/W-0	R/W-0	R/W-0	R/W-0	R/W-0
—	—	—	TUN4	TUN3	TUN2	TUN1	TUN0
bit 7							bit 0

Legend:			
R = Readable bit	W = Writable bit	U = Unimplemented bit, read as '0'	
-n = Value at POR	'1' = Bit is set	'0' = Bit is cleared	x = Bit is unknown

bit 7-5 **Unimplemented:** Read as '0'

bit 4-0 **TUN<4:0>:** Frequency Tuning bits

01111 = Maximum frequency
01110 = Maximum frequency
•
•
•
00001 =
00000 = Center frequency. Oscillator Module is running at the calibrated frequency.
11111 =
•
•
•
10000 = Minimum frequency

13.3.1 OSCILLATOR DELAY UPON POWER-UP, WAKE-UP AND BASE FREQUENCY CHANGE

In applications where the OSCTUNE register is used to shift the frequency of the internal oscillator, it is recommended that the application does not expect the frequency of the internal oscillator to stabilize immediately. In this case, the frequency may shift gradually toward the new value. The time for this frequency shift is less than eight cycles of the base frequency.

On power-up, the device is held in reset by the power-up time if the power-up timer is enabled.

Following a wake-up from Sleep mode or POR, an internal delay of ~10 µs is invoked to allow the memory bias to stabilize before program execution can begin.

TABLE 13-1: SUMMARY OF REGISTERS ASSOCIATED WITH CLOCK SOURCES

Name	Bit 7	Bit 6	Bit 5	Bit 4	Bit 3	Bit 2	Bit 1	Bit 0	Register on page
OSCTUNE	—	—	—	TUN4	TUN3	TUN2	TUN1	TUN0	95

Legend: — = Unimplemented locations, read as ‘0’. Shaded cells are not used by clock sources.

TABLE 13-2: SUMMARY OF CONFIGURATION WORD ASSOCIATED WITH CLOCK SOURCES

Name	Bits	Bit -/7	Bit -/6	Bit 13/5	Bit 12/4	Bit 11/3	Bit 10/2	Bit 9/1	Bit 8/0	Register on page
CONFIG6	13:8	—	—	—	—	—	—	—	—	62
	7:0	—	FCAL6	FCAL5	FCAL4	FCAL3	FCAL2	FCAL1	FCAL0	

Legend: — = Unimplemented locations, read as ‘0’. Shaded cells are not used by clock sources.

© 2015-2018 Microchip Technology Inc.

14.0 RESETS

The reset logic is used to place the MCP19116/7 into a known state. The source of the reset can be determined by using the device status bits.

There are multiple ways to reset the MCP19116/7 devices:

- Power-on Reset (POR)
- Overtemperature Reset (OT)
- $\overline{\text{MCLR}}$ Reset
- WDT Reset
- Brown-out Reset (BOR)

To allow V_{DD} to stabilize, an optional power-up timer can be enabled to extend the Reset time after a POR event.

Some registers are not affected in any Reset condition; their status is unknown on POR and unchanged in any other Reset. Most other registers are reset to a "Reset state" on:

- Power-on Reset
- $\overline{\text{MCLR}}$ Reset
- $\overline{\text{MCLR}}$ Reset during Sleep
- WDT Reset
- Brown-out Reset

WDT (Watchdog Timer) wake-up does not cause register resets in the same manner as a WDT Reset, since wake-up is viewed as the resumption of normal operation.

$\overline{\text{TO}}$ and $\overline{\text{PD}}$ bits are set or cleared differently in different Reset situations, as indicated in Table 14-1. The software can use these bits to determine the nature of the Reset. Refer to Table 14-2 for a full description of Reset states of all registers.

A simplified block diagram of the On-Chip Reset Circuit is shown in Figure 14-1.

The $\overline{\text{MCLR}}$ Reset path has a noise filter to detect and ignore small pulses. Refer to **Section 5.0 "Digital Electrical Characteristics"** for pulse-width specifications.

FIGURE 14-1: SIMPLIFIED BLOCK DIAGRAM OF ON-CHIP RESET CIRCUIT

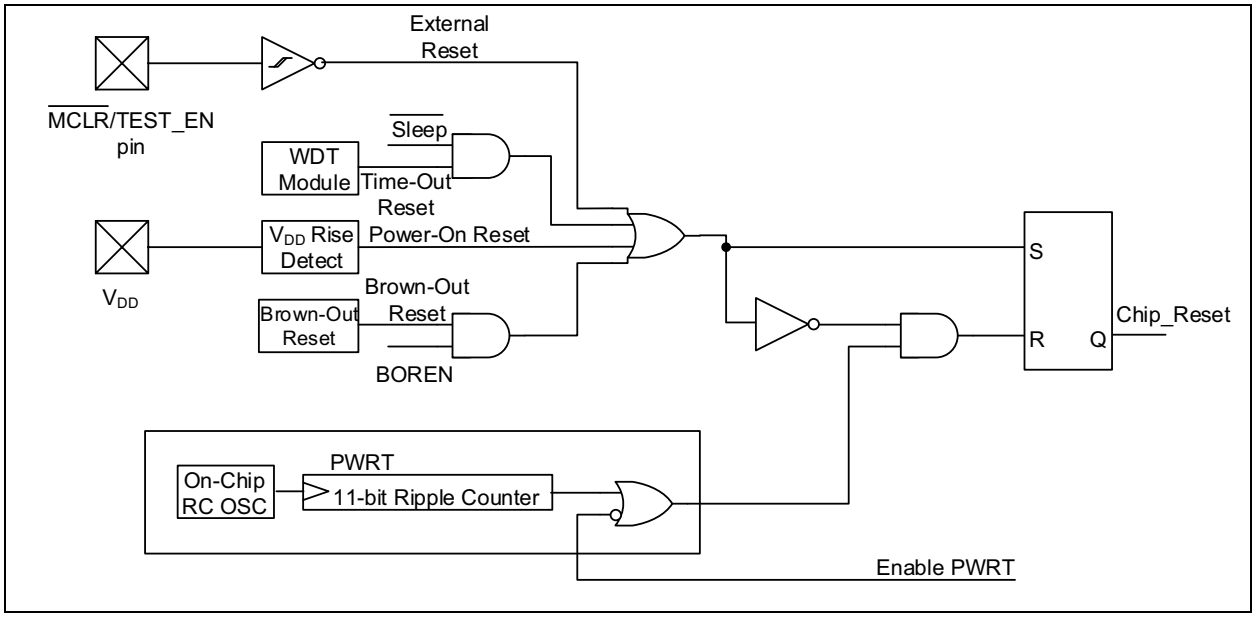

TABLE 14-1: TIME-OUT IN VARIOUS SITUATIONS

Power-Up		Wake-Up from Sleep
$\overline{\text{PWRTE}}$ = 0	$\overline{\text{PWRTE}}$ = 1	
T_{PWRT}	—	—

TABLE 14-2: STATUS/PCON BITS AND THEIR SIGNIFICANCE

$\overline{POR}$	$\overline{BOR}$	$\overline{TO}$	$\overline{PD}$	Condition
0	x	1	1	Power-on Reset
u	0	1	1	Brown-out Reset
u	u	0	u	WDT Reset
u	u	0	0	WDT Wake-Up
u	u	u	u	$\overline{MCLR}$ Reset during normal operation
u	u	1	0	$\overline{MCLR}$ Reset during Sleep

Legend: u = unchanged, x = unknown

14.1 Power-on Reset (POR)

The on-chip POR circuit holds the chip in Reset until V_{DD} has reached a high enough level for proper operation. To take advantage of the POR, simply connect the $\overline{MCLR}$ pin through a resistor to V_{DD}. This will eliminate external RC components usually needed to create Power-on Reset.

When the device starts normal operation (exits the Reset condition), device operating parameters (i.e., voltage, frequency, temperature, etc.) must be met to ensure proper operation. If these conditions are not met, the device must be held in Reset until the operating conditions are met.

14.2 $\overline{MCLR}$

MCP19116/7 devices have a noise filter in the $\overline{MCLR}$ Reset path. The filter will detect and ignore small pulses.

It should be noted that a WDT Reset does not drive $\overline{MCLR}$ pin low.

Voltages applied to the $\overline{MCLR}$ pin that exceed its specification can result in both $\overline{MCLR}$ Resets and excessive current beyond the device specification during the ESD event. For this reason, Microchip recommends that the $\overline{MCLR}$ pin no longer be tied directly to V_{DD}. The use of a Resistor-Capacitor (RC) network, as shown in Figure 14-2, is recommended.

An internal $\overline{MCLR}$ option is enabled by clearing the MCLRE bit in the CONFIG register. When MCLRE = 0, the Reset signal to the chip is generated internally. When MCLRE = 1, the $\overline{MCLR}$ pin becomes an external Reset input. In this mode, the $\overline{MCLR}$ pin has a weak pull-up to V_{DD}.

FIGURE 14-2: RECOMMENDED $\overline{MCLR}$ CIRCUIT

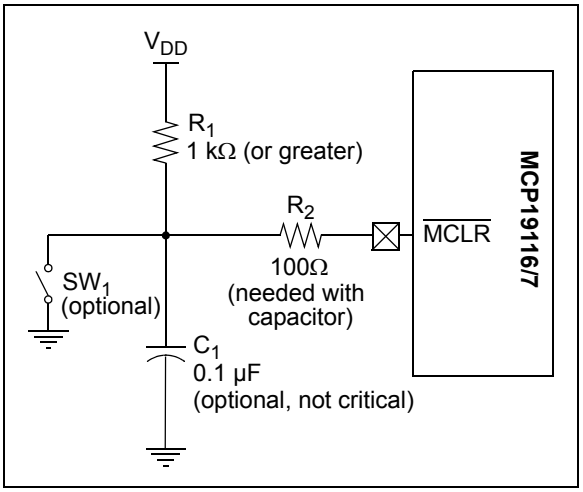

© 2015-2018 Microchip Technology Inc.

14.3 Brown-Out Reset (BOR)

The BOREN bit <8> in the CONFIG register enables or disables the BOR mode, as defined in the CONFIG register. A brown-out occurs when V_{DD} falls below V_{BOR} for greater than 100 µs minimum. On any Reset (Power-on, Brown-out, Watchdog Timer, etc.), the chip will remain in Reset until V_{DD} rises above V_{BOR} (refer to Figure 14-3). If enabled, the Power-Up Timer will be invoked by the Reset and will keep the chip in Reset for an additional 64 ms. During power-up, it is recommended that the BOR configuration bit is enabled holding the MCU in Reset (OSC turned off and no code execution) until V_{DD} exceeds the V_{BOR} threshold. Users have the option of adding an additional 64 ms delay by clearing the PWRTE bit. At this time, the V_{DD} voltage level is high enough to operate the MCU functions only; all other device functionality is not operational. This is independent of the value of V_{IN}, which is typically $V_{DD} + V_{DROPOUT}$. During power-down with BOR enabled, the MCU operation will be held in Reset when V_{DD} falls below the V_{BOR} threshold. With BOR disabled or while operating in Sleep mode, the POR will hold the part in Reset when V_{DD} falls below the V_{POR} threshold.

Note: The Power-Up Timer is enabled by the $\overline{\text{PWRTE}}$ bit in the CONFIG register. If V_{DD} drops below V_{BOR} while the Power-Up Timer is running, the chip will go back into a Brown-out Reset and the Power-Up Timer will be re-initialized. Once the V_{DD} rises above V_{BOR}, the Power-Up Timer will execute a 64 ms reset.

FIGURE 14-3: BROWN-OUT SITUATIONS

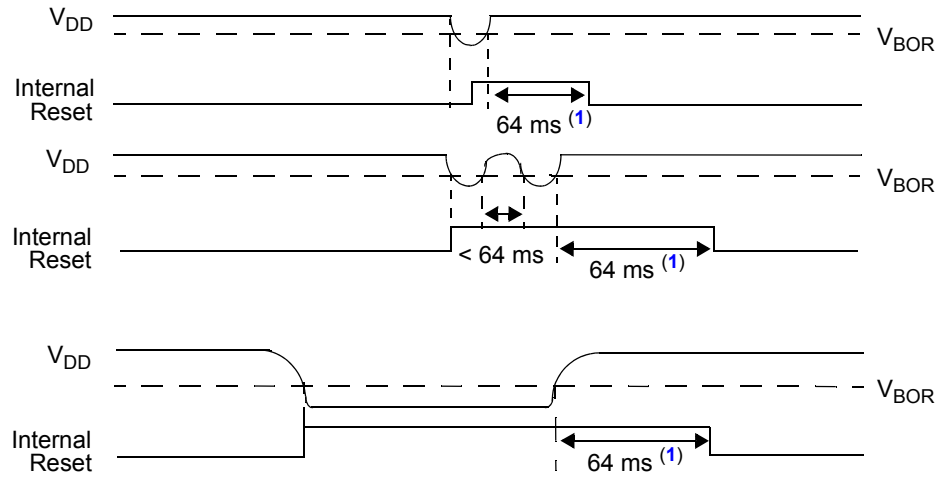

Note 1: 64 ms delay only if PWRTE bit is programmed to '0'.

14.4 Power-Up Timer (PWRT)

The Power-Up Timer provides a fixed 64 ms (nominal) time-out on power-up only, from POR Reset. The Power-Up Timer operates from an internal RC oscillator. The chip is kept in Reset as long as PWRT is active. The PWRT delay allows the V_{DD} to rise to an acceptable level. A bit ($\overline{PWRTE}$) in the CONFIG register can disable (if set) or enable (if cleared or programmed) the Power-Up Timer.

The Power-Up Timer delay varies from chip to chip due to:

- V_{DD} variation
- Temperature variation
- Process variation

> **Note:** Voltage spikes below A_{GND} at the $\overline{MCLR}$ pin, inducing currents greater than 80 mA, may cause latch-up. Thus, a series resistor of 50-100Ω should be used when applying a "low" level to the $\overline{MCLR}$ pin, rather than pulling this pin directly to A_{GND}.

The Power-Up Timer optionally delays device execution after a POR event. This timer is typically used to allow V_{DD} to stabilize before allowing the device to start running.

The Power-Up Timer is controlled by the $\overline{PWRTE}$ bit in the CONFIG register.

14.5 Watchdog Timer (WDT) Reset

The Watchdog Timer generates a Reset if the firmware does not issue a `CLRWDT` instruction within the time-out period. The $\overline{TO}$ and $\overline{PD}$ bits in the STATUS register are changed to indicate the WDT Reset. Refer to **Section 17.0 "Watchdog Timer (WDT)"** for more information.

14.6 Start-Up Sequence

Upon the release of a POR, the following must occur before the device begins executing:

- Power-Up Timer runs to completion (if enabled)
- Oscillator start-up timer runs to completion
- $\overline{MCLR}$ must be released (if enabled)

The total time out will vary based on $\overline{PWRTE}$ bit status. For example, with PWRTE bit erased (PWRT disabled), there will be no time out at all. Figures 14-4, 14-5 and 14-6 represent time-out sequences.

Since the time-outs occur from the POR pulse, if $\overline{MCLR}$ is kept low long enough, the time-outs will expire. Then, bringing $\overline{MCLR}$ high begins execution immediately (refer to Figure 14-5). This is useful for testing purposes or to synchronize more than one MCP19116/7 device operating in parallel.

14.6.1 POWER CONTROL (PCON) REGISTER

The Power Control (PCON) register (address 8Eh) has two Status bits to indicate what type of Reset occurred last.

FIGURE 14-4: TIME-OUT SEQUENCE ON POWER-UP (DELAYED $\overline{MCLR}$): CASE 1

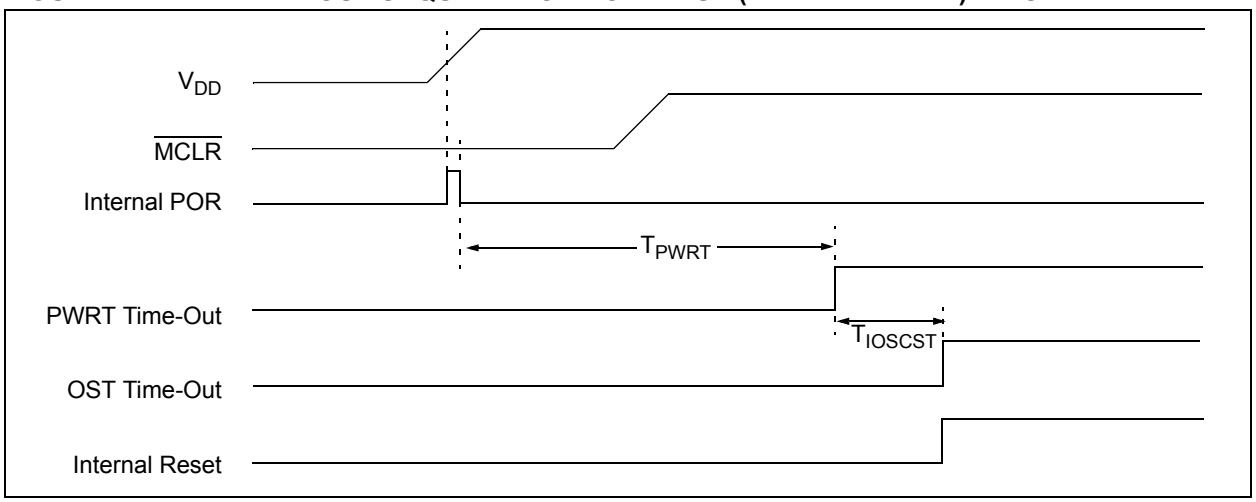

© 2015-2018 Microchip Technology Inc.

FIGURE 14-5: TIME-OUT SEQUENCE ON POWER-UP (DELAYED $\overline{MCLR}$): CASE 2

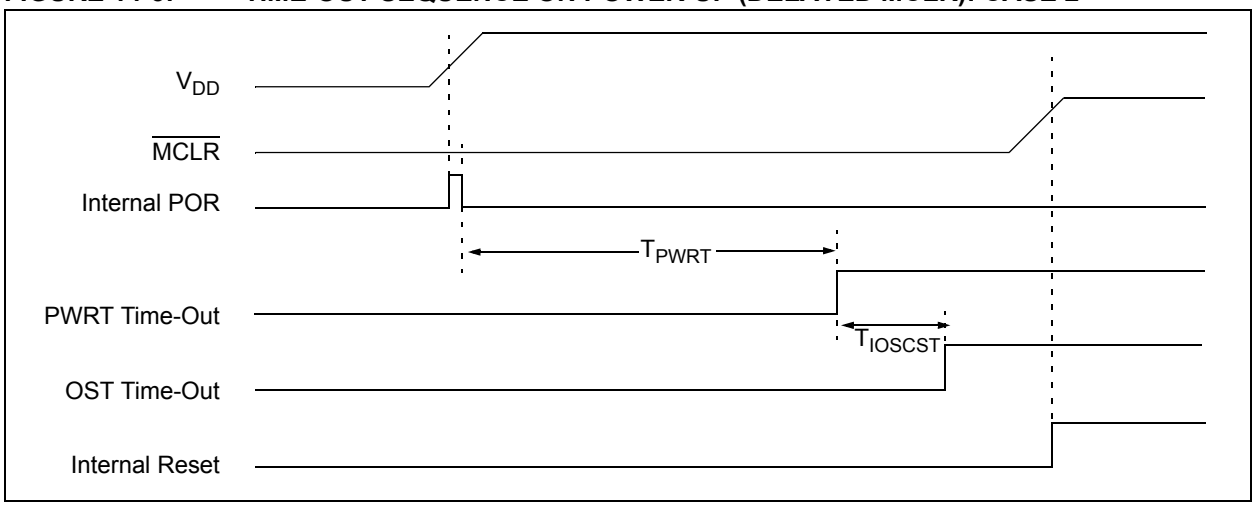

FIGURE 14-6: TIME-OUT SEQUENCE ON POWER-UP ($\overline{MCLR}$ WITH V_{DD})

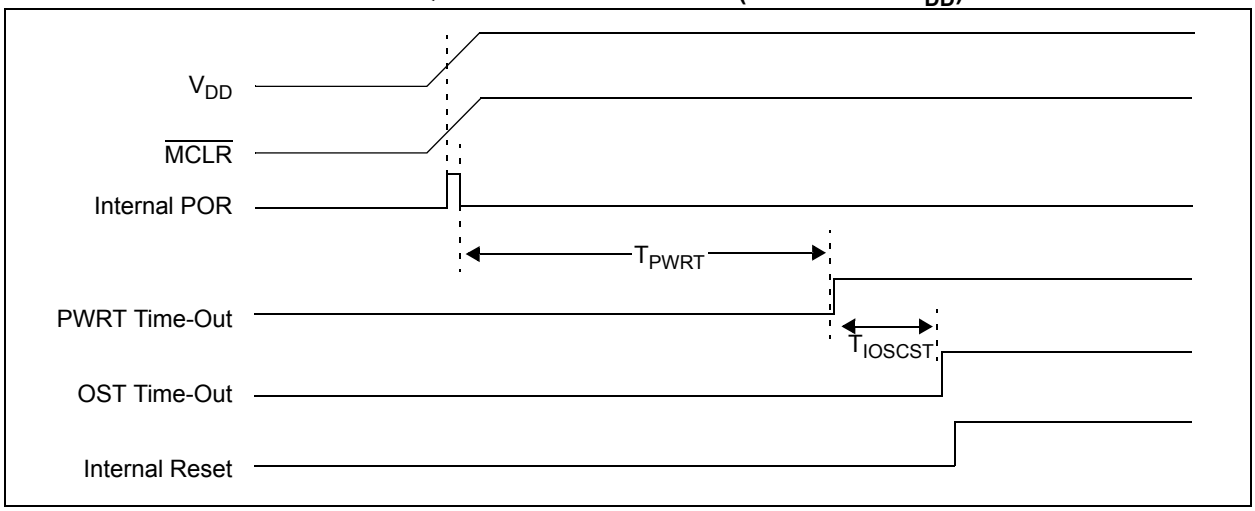

14.7 Determining the Cause of a Reset

Upon any Reset, multiple bits in the STATUS and PCON register are updated to indicate the cause of the Reset. Tables 14-3 and 14-4 show the Reset conditions of these registers.

TABLE 14-3: RESET STATUS BITS AND THEIR SIGNIFICANCE

$\overline{POR}$	$\overline{BOR}$	$\overline{TO}$	$\overline{PD}$	Condition
0	x	1	1	Power-on Reset
u	0	1	1	Brown-out Reset
u	u	0	u	WDT Reset
u	u	0	0	WDT Wake-Up from Sleep
u	u	1	0	Interrupt Wake-Up from Sleep
u	u	u	u	$\overline{MCLR}$ Reset during normal operation
u	u	1	0	$\overline{MCLR}$ Reset during Sleep
0	u	0	x	Not allowed. $\overline{TO}$ is set on POR.
0	u	x	0	Not allowed. $\overline{PD}$ is set on POR.

TABLE 14-4: RESET CONDITION FOR SPECIAL REGISTERS (1)

Condition	Program Counter	STATUS Register	PCON Register
Power-on Reset	0000h	0001 1xxx	---- --0u
Brown-out Reset	0000	0001 1xxx	---- --u0
$\overline{\text{MCLR}}$ Reset during normal operation	0000h	000u uuuu	---- --uu
$\overline{\text{MCLR}}$ Reset during Sleep	0000h	0001 0uuu	---- --uu
WDT Reset	0000h	0000 uuuu	---- --uu
WDT Wake-Up from Sleep	PC + 1	uuu0 0uuu	---- --uu
Interrupt Wake-Up from Sleep	PC + 1 (2)	uuu1 0uuu	---- --uu

Legend: u = unchanged, x = unknown, - = unimplemented bit, reads as '0'.

Note 1: If a Status bit is not implemented, that bit will be read as '0'.

2: When the wake-up is due to an interrupt and Global Enable bit (GIE) is set, the return address is pushed on the stack and PC is loaded with the interrupt vector (0004h) after execution of PC + 1.

14.8 Power Control (PCON) Register

The Power Control (PCON) register contains flag bits to differentiate between a:

- Power-on Reset ($\overline{\text{POR}}$)
- Brown-out Reset ($\overline{\text{BOR}}$)

The PCON register bits are shown in Register 14-1.

REGISTER 14-1: PCON: POWER CONTROL REGISTER

R-0	U-0	U-0	U-0	R/W-0	R-0	R/W-0	R/W-0
ADC_REFR	—	—	—	$\overline{\text{VDDFLAG}}$	VDDOK	$\overline{\text{POR}}$	$\overline{\text{BOR}}$
bit 7							bit 0

Legend:			
R = Readable bit	W = Writable bit	U = Unimplemented bit, read as '0'	
-n = Value at POR	'1' = Bit is set	'0' = Bit is cleared	x = Bit is unknown

bit 7 **ADC_REFR:** $V_{DD} > AV_{DD}$ Status bit that shows if the ADC Reference is present at the ADC
1 = V_{DD} is greater than AV_{DD} and the ADC Reference is present at the ADC
0 = V_{DD} is not greater than AV_{DD} and the ADC Reference is not present at the ADC

bit 6-4 **Unimplemented:** Read as '0'

bit 3 **$\overline{\text{VDDFLAG}}$:** VDDOK history status bit
1 = V_{DD} LDO has not dropped out of regulation (VDDOK has not gone low since this bit was last set)
0 = V_{DD} LDO has dropped out of regulation at some time since this bit was last set. Must be set by firmware when VDDOK=1

bit 2 **VDDOK:** V_{DD} Status bit
1 = V_{DD} is in regulation
0 = V_{DD} is not in regulation

bit 1 **$\overline{\text{POR}}$:** Power-on Reset Status bit
1 = No Power-on Reset occurred
0 = A Power-on Reset occurred (must be set in software after a Power-on Reset occurs)

bit 0 **$\overline{\text{BOR}}$:** Brown-out Reset
1 = No Brown-out Reset occurred
0 = A Brown-out Reset occurred (must be set in software after a Brown-out Reset occurs)

© 2015-2018 Microchip Technology Inc.

TABLE 14-5: SUMMARY OF REGISTERS ASSOCIATED WITH RESETS

Name	Bit 7	Bit 6	Bit 5	Bit 4	Bit 3	Bit 2	Bit 1	Bit 0	Register on page
PCON	—	—	—	—	—	—	$\overline{\text{POR}}$	$\overline{\text{BOR}}$	102
STATUS	IPR	RP1	RP0	$\overline{\text{TO}}$	$\overline{\text{PD}}$	Z	DC	C	83

Legend: — = unimplemented bit, read as '0'. Shaded cells are not used by Resets.

Note: Other (non power-up) Resets include $\overline{\text{MCLR}}$ Reset and Watchdog Timer Reset during normal operation.

NOTES:

© 2015-2018 Microchip Technology Inc.

15.0 INTERRUPTS

The MCP19116/7 devices have multiple sources of interrupt:

- External Interrupt (INT pin)
- Interrupt-on-Change (IOC) Interrupts
- Timer0 Overflow Interrupt
- Timer1 Overflow Interrupt
- Timer2 Match Interrupt
- ADC Interrupt
- System Input Undervoltage Error
- System Input Overvoltage Error
- SSP
- BCL
- USART TX Interrupt
- USART RC Interrupt
- Desaturation Detection
- Gate Drive UVLO
- Capture/Compare 1
- Capture/Compare 2
- Overtemperature

The Interrupt Control (INTCON) register and the Peripheral Interrupt Request (PIRx) registers record individual interrupt requests in flag bits. The INTCON register also has individual and global interrupt enable bits.

The Global Interrupt Enable bit (GIE) in the INTCON register enables (if set) all unmasked interrupts or disables (if cleared) all interrupts. Individual interrupts can be disabled through their corresponding enable bits in the INTCON register and PIEx registers. GIE is cleared on Reset.

When an interrupt is serviced, the following actions occur automatically:

- The GIE is cleared to disable any further interrupt
- The return address is pushed onto the stack
- The PC is loaded with 0004h

The firmware within the Interrupt Service Routine (ISR) should determine the source of the interrupt by polling the interrupt flag bits. The interrupt flag bits must be cleared before exiting the ISR to avoid repeated interrupts. Because the GIE bit is cleared, any interrupt that occurs while executing the ISR is recorded through its interrupt flag but does not cause the processor to redirect to the interrupt vector.

Note 1:	Individual interrupt flag bits are set, regardless of the status of their corresponding mask bit or the GIE bit.
2:	When an instruction that clears the GIE bit is executed, any interrupts that were pending for execution in the next cycle are ignored. The interrupts which were ignored are still pending to be serviced when the GIE bit is set again.

The `RETFIE` instruction exits the ISR by popping the previous address from the stack, restoring the saved context from the shadow registers and setting the GIE bit.

For additional information on a specific interrupt operation, refer to its peripheral chapter.

15.1 Interrupt Latency

For external interrupt events, such as the INT pin or PORTGPx change interrupt, the interrupt latency will be three or four instruction cycles. The exact latency depends upon when the interrupt event occurs (refer to Figure 15-2). The latency is the same for one- or two-cycle instructions.

15.2 GPA2/INT Interrupt

The external interrupt on the GPA2/INT pin is edge-triggered, either on the rising edge if the INTEDG bit in the OPTION_REG register is set, or the falling edge if the INTEDG bit is clear. When a valid edge appears on the GPA2/INT pin, the INTF bit in the INTCON register is set. This interrupt can be disabled by clearing the INTE control bit in the INTCON register. The INTF bit must be cleared by software in the Interrupt Service Routine before re-enabling this interrupt. The GPA2/INT interrupt can wake up the processor from Sleep, if the INTE bit was set prior to going into Sleep. Refer to **Section 16.0, Power-Down Mode (Sleep)** for details on Sleep and **Section 16.1 "Wake-Up from Sleep"** for timing of wake-up from Sleep through GPA2/INT interrupt.

Note:	The ANSEL register must be initialized to configure an analog channel as a digital input. Pins configured as analog inputs will read '0' and cannot generate an interrupt.

FIGURE 15-1: INTERRUPT LOGIC

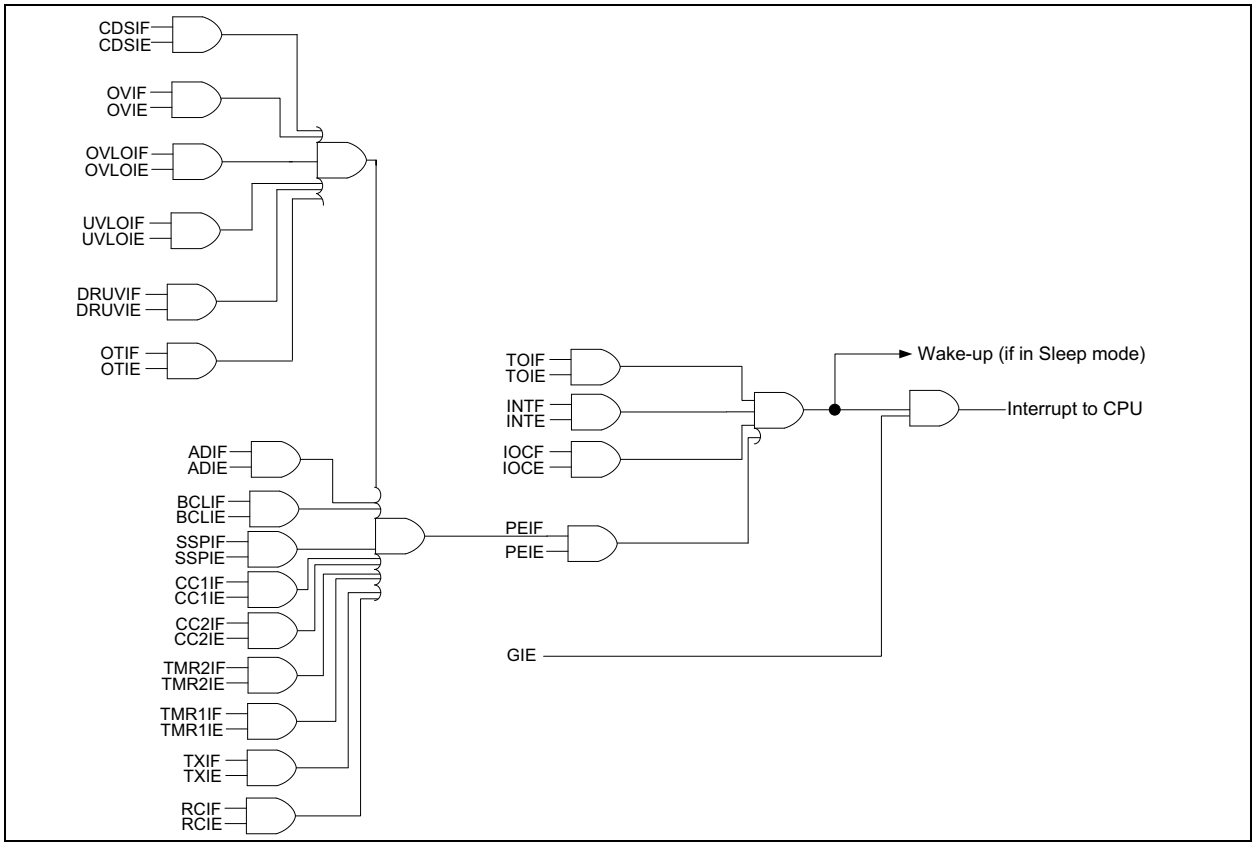

FIGURE 15-2: INT PIN INTERRUPT TIMING

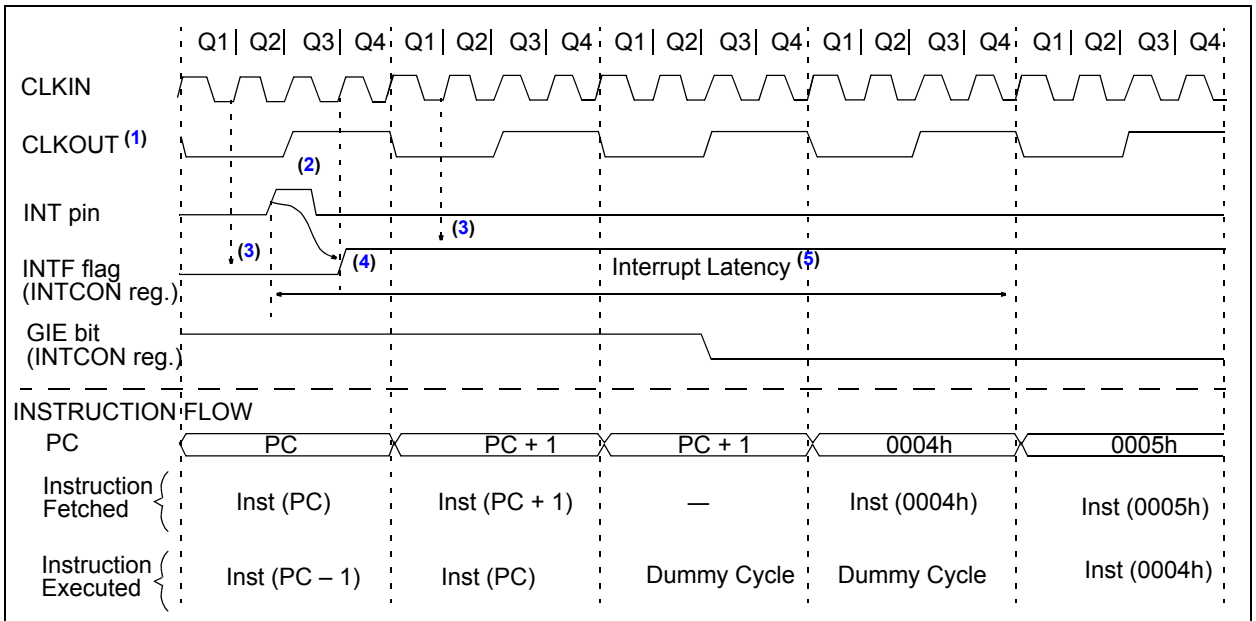

Note 1: CLKOUT is available only in INTOSC and RC Oscillator modes.

2: For minimum width of INT pulse, refer to AC specifications in **Section 5.0, Digital Electrical Characteristics.**

3: INTF flag is sampled here (every Q1).

4: INTF is enabled to be set any time during the Q4-Q1 cycles.

5: Asynchronous interrupt latency = 3-4 T_{CY}. Synchronous latency = 3 T_{CY}, where T_{CY} = instruction cycle time. Latency is the same whether Inst (PC) is a single-cycle or a two-cycle instruction.

© 2015-2018 Microchip Technology Inc.

15.3 Interrupt Control Registers

15.3.1 INTCON REGISTER

The INTCON register is a readable and writable register that contains the various enable and flag bits for the TMR0 register overflow, interrupt-on-change and external INT pin interrupts.

Note: Interrupt flag bits are set when an interrupt condition occurs, regardless of the state of its corresponding enable bit or the Global Enable bit (GIE) in the INTCON register. The user's software should ensure the appropriate interrupt flag bits are clear prior to enabling an interrupt.

REGISTER 15-1: INTCON: INTERRUPT CONTROL REGISTER

R/W-0	R/W-0	R/W-0	R/W-0	R/W-0	R/W-0	R/W-0	R/W-x
GIE	PEIE	T0IE	INTE	IOCE	T0IF	INTF	IOCF
bit 7							bit 0

Legend:			
R = Readable bit	W = Writable bit	U = Unimplemented bit, read as '0'	
-n = Value at POR	'1' = Bit is set	'0' = Bit is cleared	x = Bit is unknown

bit 7 **GIE:** Global Interrupt Enable bit
- 1 = Enables all unmasked interrupts
- 0 = Disables all interrupts

bit 6 **PEIE:** Peripheral Interrupt Enable bit
- 1 = Enables all unmasked peripheral interrupts
- 0 = Disables all peripheral interrupts

bit 5 **T0IE:** TMR0 Overflow Interrupt Enable bit
- 1 = Enables the TMR0 interrupt
- 0 = Disables the TMR0 interrupt

bit 4 **INTE:** INT External Interrupt Enable bit
- 1 = Enables the INT external interrupt
- 0 = Disables the INT external interrupt

bit 3 **IOCE:** Interrupt-on-Change Enable bit (1)
- 1 = Enables the interrupt-on-change
- 0 = Disables the interrupt-on-change

bit 2 **T0IF:** TMR0 Overflow Interrupt Flag bit (2)
- 1 = TMR0 register overflowed (must be cleared in software)
- 0 = TMR0 register did not overflow

bit 1 **INTF:** External Interrupt Flag bit
- 1 = The external interrupt occurred (must be cleared in software)
- 0 = The external interrupt did not occur

bit 0 **IOCF:** Interrupt-on-Change Interrupt Flag bit
- 1 = When at least one of the interrupt-on-change pins changed state
- 0 = None of the interrupt-on-change pins changed state

Note 1: IOCx registers must also be enabled.

2: T0IF bit is set when TMR0 rolls over. TMR0 is unchanged on Reset and should be initialized before clearing T0IF bit.

15.3.1.1 PIE1 Register

The PIE1 register contains the Peripheral Interrupt Enable bits, as shown in Register 15-2.

> **Note 1:** Bit PEIE in the INTCON register must be set to enable any peripheral interrupt.

REGISTER 15-2: PIE1: PERIPHERAL INTERRUPT ENABLE REGISTER 1

R/W-0	R/W-0	R/W-0	R/W-0	R/W-0	R/W-0	R/W-0	R/W-0
TXIE	RCIE	BCLIE	SSPIE	CC2IE	CC1IE	TMR2IE	TMR1IE
bit 7							bit 0

Legend:			
R = Readable bit	W = Writable bit	U = Unimplemented bit, read as ‘0’	
-n = Value at POR	‘1’ = Bit is set	‘0’ = Bit is cleared	x = Bit is unknown

bit 7 **TXIE:** USART Transmit Interrupt Enable bit
1 = Enables the USART transmit interrupt
0 = Disables the USART transmit interrupt

bit 6 **RCIE:** USART Receive Interrupt Enable bit
1 = Enables the USART receive interrupt
0 = Disables the USART receive interrupt

bit 5 **BCLIE:** MSSP Bus Collision Interrupt Enable bit
1 = Enables the MSSP Bus Collision Interrupt
0 = Disables the MSSP Bus Collision Interrupt

bit 4 **SSPIE:** Synchronous Serial Port (MSSP) Interrupt Enable bit
1 = Enables the MSSP interrupt
0 = Disables the MSSP interrupt

bit 3 **CC2IE:** Capture2/Compare2 Interrupt Enable bit
1 = Enables the Capture2/Compare2 interrupt
0 = Disables the Capture2/Compare2 interrupt

bit 2 **CC1IE:** Capture1/Compare1 Interrupt Enable bit
1 = Enables the Capture1/Compare1 interrupt
0 = Disables the Capture1/Compare1 interrupt

bit 1 **TMR2IE:** Timer2 Interrupt Enable
1 = Enables the Timer2 interrupt
0 = Disables the Timer2 interrupt

bit 0 **TMR1IE:** Timer1 Interrupt Enable
1 = Enables the Timer1 interrupt
0 = Disables the Timer1 interrupt

© 2015-2018 Microchip Technology Inc.

15.3.1.2 PIE2 Register

The PIE2 register contains the Peripheral Interrupt Enable bits, as shown in Register 15-3.

> **Note 1:** Bit PEIE in the INTCON register must be set to enable any peripheral interrupt.

REGISTER 15-3: PIE2: PERIPHERAL INTERRUPT ENABLE REGISTER 2

R/W-0	R/W-0	U-0	R/W-0	R/W-0	R/W-0	R/W-0	R/W-0
CDSIE	ADIE	—	OTIE	OVIE	DRUVIE	OVLOIE	UVLOIE
bit 7							bit 0

Legend:			
R = Readable bit	W = Writable bit	U = Unimplemented bit, read as ‘0’	
-n = Value at POR	‘1’ = Bit is set	‘0’ = Bit is cleared	x = Bit is unknown

bit 7 **CDSIE:** Desaturation Detection Interrupt Enable bit
`1` = Enables the DESAT Detect interrupt
`0` = Disables the DESAT Detect interrupt

bit 6 **ADIE:** ADC Interrupt Enable bit
`1` = Enables the ADC interrupt
`0` = Disables the ADC interrupt

bit 5 **Unimplemented:** Read as ‘`0`’

bit 4 **OTIE:** Overtemperature Interrupt Enable bit
`1` = Enables overtemperature interrupt
`0` = Disables overtemperature interrupt

bit 3 **OVIE:** V_{OUT} Overvoltage Interrupt Enable bit
`1` = Enables the OV interrupt
`0` = Disables the OV interrupt

bit 2 **DRUVIE:** Gate Drive Undervoltage Lockout Interrupt Enable bit
`1` = Enables Gate Drive UVLO interrupt
`0` = Disables Gate Drive UVLO interrupt

bit 1 **OVLOIE:** V_{IN} Overvoltage Lockout Interrupt Enable bit
`1` = Enables OVLO interrupt
`0` = Disables OVLO interrupt

bit 0 **UVLOIE:** V_{IN} Undervoltage Lockout Interrupt Enable bit
`1` = Enables UVLO interrupt
`0` = Disables UVLO interrupt

15.3.1.3 PIR1 Register

The PIR1 register contains the Peripheral Interrupt Flag bits, as shown in Register 15-4.

> **Note 1:** Interrupt flag bits are set when an interrupt condition occurs, regardless of the state of its corresponding enable bit or the Global Enable bit (GIE) in the INTCON register. The user's software should ensure the appropriate interrupt flag bits are clear prior to enabling an interrupt.

REGISTER 15-4: PIR1: PERIPHERAL INTERRUPT FLAG REGISTER 1

R/W-0	R/W-0	R/W-0	R/W-0	R/W-0	R/W-0	R/W-0	R/W-0
TXIF	RCIF	BCLIF	SSPIF	CC2IF	CC1IF	TMR2IF	TMR1IF
bit 7							bit 0

Legend:			
R = Readable bit	W = Writable bit	U = Unimplemented bit, read as '0'	
-n = Value at POR	'1' = Bit is set	'0' = Bit is cleared	x = Bit is unknown

bit 7 **TXIF:** USART Transmit Interrupt Flag bit
1 = The USART transmit buffer is empty (cleared by writing to TXREG)
0 = The USART receive buffer is not full

bit 6 **RCIF:** USART Receive Interrupt Flag bit
1 = The USART receive buffer is full (cleared by reading RCREG)
0 = The USART receive buffer is not full

bit 5 **BCLIF:** MSSP Bus Collision Interrupt Flag bit
1 = Interrupt is pending
0 = Interrupt is not pending

bit 4 **SSPIF:** Synchronous Serial Port (MSSP) Interrupt Flag bit
1 = Interrupt is pending
0 = Interrupt is not pending

bit 3 **CC2IF:** Capture2/Compare2 Interrupt Flag bit
1 = Capture or Compare has occurred
0 = Capture or Compare has not occurred

bit 2 **CC1IF:** Capture1/Compare1 Interrupt Flag bit
1 = Capture or Compare has occurred
0 = Capture or Compare has not occurred

bit 1 **TMR2IF:** Timer2 to PR2 Match Interrupt Flag
1 = Timer2 to PR2 match occurred (must be cleared in software)
0 = Timer2 to PR2 match did not occur

bit 0 **TMR1IF:** Timer1 Interrupt Flag
1 = Timer1 rolled over (must be cleared in software)
0 = Timer1 did not roll over

© 2015-2018 Microchip Technology Inc.

15.3.1.4 PIR2 Register

The PIR2 register contains the Peripheral Interrupt Flag bits, as shown in Register 15-5.

> **Note 1:** Interrupt flag bits are set when an interrupt condition occurs, regardless of the state of its corresponding enable bit or the Global Enable bit (GIE) in the INTCON register. The user's software should ensure the appropriate interrupt flag bits are clear prior to enabling an interrupt.

REGISTER 15-5: PIR2: PERIPHERAL INTERRUPT FLAG REGISTER 2

R/W-0	R/W-0	U-0	R/W-0	R/W-0	R/W-0	R/W-0	R/W-0
CDSIF	ADIF	—	OTIF	OVIF	DRUVIF	OVLOIF	UVLOIF
bit 7							bit 0

Legend:			
R = Readable bit	W = Writable bit	U = Unimplemented bit, read as '0'	
-n = Value at POR	'1' = Bit is set	'0' = Bit is cleared	x = Bit is unknown

bit 7 **CDSIF:** DESAT Detect comparator module interrupt flag bit
1 = An interrupt is pending
0 = An interrupt is not pending

bit 6 **ADIF:** ADC Interrupt Flag bit
1 = ADC conversion complete
0 = ADC conversion has not completed or has not been started

bit 5 **Unimplemented:** Read as '0'

bit 4 **OTIF:** Overtemperature Interrupt Flag bit
1 = Overtemperature event has occurred
0 = Overtemperature event has not occurred

bit 3 **OVIF:** Overvoltage Interrupt Flag bit
With OVINTP bit set:
1 = A V_{OUT} Not Overvoltage-to-Overvoltage edge has been detected
0 = A V_{OUT} Not Overvoltage-to-Overvoltage edge has not been detected
With OVINTN bit set:
1 = A V_{OUT} Overvoltage-to-Not Overvoltage edge has been detected
0 = A V_{OUT} Overvoltage-to-Not Overvoltage edge has not been detected

bit 2 **DRUVIF:** Gate Drive Undervoltage Lockout Interrupt Flag bit
1 = Gate Drive Undervoltage Lockout has occurred
0 = Gate Drive Undervoltage Lockout has not occurred

bit 1 **OVLOIF:** V_{IN} Overvoltage Lockout Interrupt Flag bit
With OVLOINTP bit set:
1 = A V_{IN} Not Overvoltage-to-V_{IN} Overvoltage edge has been detected
0 = A V_{IN} Not Overvoltage-to-V_{IN} Overvoltage edge has not been detected
With OVLOINTN bit set:
1 = A V_{IN} Overvoltage-to-V_{IN} Not Overvoltage edge has been detected
0 = A V_{IN} Overvoltage-to-V_{IN} Not Overvoltage edge has not been detected

bit 0 **UVLOIF:** V_{IN} Undervoltage Lockout Interrupt Flag bit
With UVLOINTP bit set:
1 = A V_{IN} Not Undervoltage-to-V_{IN} Undervoltage edge has been detected
0 = A V_{IN} Not Undervoltage-to-V_{IN} Undervoltage edge has not been detected
With UVLOINTN bit set:
1 = A V_{IN} Undervoltage-to-V_{IN} Not Undervoltage edge has been detected
0 = A V_{IN} Undervoltage-to-V_{IN} Not Undervoltage edge has not been detected

TABLE 15-1: SUMMARY OF REGISTERS ASSOCIATED WITH INTERRUPTS

Name	Bit 7	Bit 6	Bit 5	Bit 4	Bit 3	Bit 2	Bit 1	Bit 0	Register on page
INTCON	GIE	PEIE	T0IE	INTE	IOCE	T0IF	INTF	IOCF	107
OPTION_REG	$\overline{\text{RAPU}}$	INTEDG	T0CS	T0SE	PSA	PS2	PS1	PS0	90
PIE1	TXIE	RCIE	BCLIE	SSPIE	CC2IE	CC1IE	TMR2IE	TMR1IE	108
PIE2	CDSIE	ADIE	—	OTIE	OVIE	DRUVIE	OVLOIE	UVLOIE	109
PIR1	TXIF	RCIF	BCLIF	SSPIF	—	—	TMR2IF	TMR1IF	110
PIR2	CDSIF	ADIF	—	OTIF	OVIF	DRUVIF	OVLOIF	UVLOIF	111

Legend: — = unimplemented locations, read as ‘0’. Shaded cells are not used by interrupts.

© 2015-2018 Microchip Technology Inc.

15.4 Context Saving During Interrupts

During an interrupt, only the return PC value is saved on the stack. Typically, users may wish to save key registers during an interrupt (e.g., W and STATUS registers). This must be implemented in software.

Temporary holding registers W_TEMP and STATUS_TEMP should be placed in the last 16 bytes of GPR. These 16 locations are common to all banks and do not require banking. This makes context save and restore operations simpler. The code shown in Example 15-1 can be used to:

- Store the W register
- Store the STATUS register
- Execute the ISR code
- Restore the Status (and Bank Select Bit) register
- Restore the W register

Note: The MCP19116/7 devices do not require saving the PCLATH. However, if computed GOTOs are used in both the ISR and the main code, the PCLATH must be saved and restored in the ISR.

EXAMPLE 15-1: SAVING STATUS AND W REGISTERS IN RAM

```
MOVWF   W_TEMP              ;Copy W to TEMP register
SWAPF   STATUS,W            ;Swap status to be saved into W
                            ;Swaps are used because they do not affect the status bits
MOVWF   STATUS_TEMP         ;Save status to bank zero STATUS_TEMP register
:
:(ISR)                      ;Insert user code here
:
SWAPF   STATUS_TEMP,W       ;Swap STATUS_TEMP register into W
                            ;(sets bank to original state)
MOVWF   STATUS              ;Move W into STATUS register
SWAPF   W_TEMP,F            ;Swap W_TEMP
SWAPF   W_TEMP,W            ;Swap W_TEMP into W
```

NOTES:

© 2015-2018 Microchip Technology Inc.

16.0 POWER-DOWN MODE (SLEEP)

The Power-Down mode is entered by executing a SLEEP instruction.

Upon entering Sleep mode, the following conditions occur:

1. WDT is cleared but keeps running, if enabled for operation during Sleep.
2. $\overline{PD}$ bit in the STATUS register is cleared.
3. $\overline{TO}$ bit in the STATUS register is set.
4. CPU clock is disabled.
5. The ADC is inoperable due to the absence of the 4V LDO power (AV_{DD}) when the ADC reference is set to AV_{DD}.
6. I/O ports maintain the status they had before SLEEP was executed (driving high, low or high-impedance).
7. Resets other than WDT and BOR are not affected by Sleep mode.
8. Analog Circuit power (AV_{DD}) is removed during Sleep mode.
9. To minimize sleep current the ADC Reference must be set to AV_{DD} (default).

Refer to individual chapters for more details on peripheral operation during Sleep.

To minimize current consumption, the following conditions should be considered:

- I/O pins should not be floating [(1)]
- External circuitry sinking current from I/O pins
- Internal circuitry sourcing current from I/O pins
- Current draw from pins with internal weak pull-ups
- Modules using Timer1 oscillator
- ADC Reference should be set to the default condition (AV_{DD}).
- V_{DR} will draw a small amount of current from V_{DD} if V_{DD} is connected to V_{DR} externally. To achieve minimum Sleep current, disconnect V_{DR} from V_{DD} during Sleep.

Note 1: It is recommended that the I/O pins that are high-impedance inputs be pulled to V_{DD} or GND externally to avoid switching currents caused by floating inputs.

The SLEEP instruction removes power from the analog circuitry. AV_{DD} is shut down to minimize current draw in Sleep mode and to maintain a shutdown current of 50 µA typical. The 5V LDO (V_{DD}) voltage drops to 2.9V minimum in Sleep mode. External current draw from the 5V LDO (V_{DD}) should be limited to less than 1 mA. Loads drawing more than 1 mA externally during Sleep mode risk loading down the V_{DD} voltage and tripping POR. A POR event during Sleep mode will wake the device from Sleep. The enable state of the analog circuitry does not change with the execution of the SLEEP instruction.

16.1 Wake-Up from Sleep

The device can wake up from Sleep through one of the following events:

1. External Reset input on $\overline{MCLR}$ pin, if enabled
2. POR Reset
3. Watchdog Timer, if enabled
4. Any external interrupt
5. Interrupts by peripherals capable of running during Sleep (see individual peripheral for more information)

The first two events will cause a device reset. The last three events are considered a continuation of program execution. To determine whether a device reset or wake-up event occurred, refer to **Section 14.7 "Determining the Cause of a Reset"**.

The following peripheral interrupts can wake the device from Sleep:

1. Interrupt-on-change
2. External Interrupt from INT pin

When the SLEEP instruction is being executed, the next instruction (PC + 1) is prefetched. For the device to wake up through an interrupt event, the corresponding interrupt enable bit must be enabled. Wake-up will occur regardless of the state of the GIE bit. If the GIE bit is disabled, the device continues execution at the instruction after the SLEEP instruction. If the GIE bit is enabled, the device executes the instruction after the SLEEP instruction and will then call the Interrupt Service Routine. In cases where the execution of the instruction following SLEEP is not desirable, the user should have a NO OPERATION (NOP) after the SLEEP instruction.

The WDT is cleared when the device wakes up from Sleep, regardless of the source of wake-up.

16.1.1 WAKE-UP USING INTERRUPTS

When global interrupts are disabled (GIE cleared) and any interrupt source has both its interrupt enable bit and interrupt flag bit set, one of the following will occur:

- If the interrupt occurs **before** the execution of a SLEEP instruction:
  - SLEEP instruction will execute as a NOP
  - WDT and WDT prescaler are not cleared
  - $\overline{TO}$ bit in the STATUS register are not set
  - $\overline{PD}$ bit in the STATUS register are not cleared
- If the interrupt occurs **during** or **after** the execution of a SLEEP instruction:
  - SLEEP instruction is completely executed
  - Device immediately wakes up from Sleep
  - WDT and WDT prescaler are cleared
  - $\overline{TO}$ bit in the STATUS register is set
  - $\overline{PD}$ bit in the STATUS register is cleared

Even if the flag bits were checked before executing a SLEEP instruction, it may be possible for flag bits to become set before the SLEEP instruction completes. To determine whether a SLEEP instruction executed, test the $\overline{PD}$ bit. If the $\overline{PD}$ bit is set, the SLEEP instruction was executed as a NOP.

FIGURE 16-1: WAKE-UP FROM SLEEP THROUGH INTERRUPT

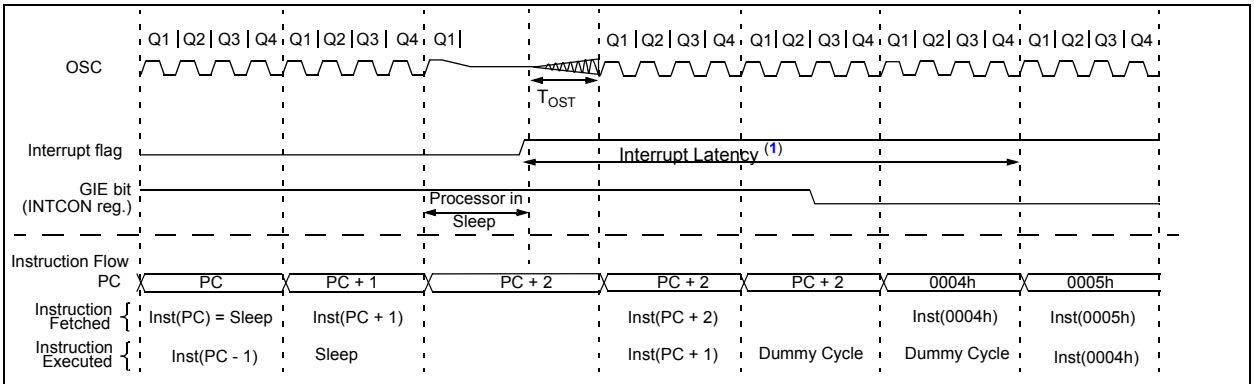

Note 1: GIE = 1 assumed. In this case after wake-up, the processor calls the ISR at 0004h. If GIE = 0, execution will continue in-line.

TABLE 16-1: SUMMARY OF REGISTERS ASSOCIATED WITH POWER-DOWN MODE

Name	Bit 7	Bit 6	Bit 5	Bit 4	Bit 3	Bit 2	Bit 1	Bit 0	Register on page
INTCON	GIE	PEIE	T0IE	INTE	IOCE	T0IF	INTF	IOCF	107
IOCA	IOCA7	IOCA6	IOCA5	—	IOCA3	IOCA2	IOCA1	IOCA0	134
IOCB	IOCB7	IOCB6	IOCB5	IOCB4	—	—	IOCB1	IOCB0	134
PIE1	TXIE	RCIE	BCLIE	SSPIE	CC2IE	CC1IE	TMR2IE	TMR1IE	108
PIE2	CDSIE	ADIE	—	OTIE	OVIE	DRUVIE	OVLOIE	UVLOIE	109
PIR1	TXIF	RCIF	BCLIF	SSPIF	CC2IF	CC1IF	TMR2IF	TMR1IF	110
PIR2	CDSIF	ADIF	—	OTIF	OVIF	DRUVIF	OVLOIF	UVLOIF	111
STATUS	IRP	RP1	RP0	$\overline{TO}$	$\overline{PD}$	Z	DC	C	83

Legend: — = unimplemented, read as '0'. Shaded cells are not used in Power-Down mode.

© 2015-2018 Microchip Technology Inc.

17.0 WATCHDOG TIMER (WDT)

The Watchdog Timer is a free running timer. The WDT is enabled by setting the WDTE bit in the CONFIG register (default setting).

During normal operation, a WDT time out generates a device reset. If the device is in Sleep mode, a WDT time out causes the device to wake up and continue with normal operation.

The WDT can be permanently disabled by clearing the WDTE bit in the CONFIG register. Refer to **Section 12.1 "Configuration Word"** for more information.

17.1 Watchdog Timer (WDT) Operation

During normal operation, a WDT time out generates a device reset. If the device is in Sleep mode, a WDT time out causes the device to wake-up and continue with normal operation; this is known as a WDT wake-up. The WDT can be permanently disabled by clearing the WDTE configuration bit.

The postscaler assignment is fully under software control and can be changed during program execution.

17.2 WDT Period

The WDT has a nominal time-out period of 18 ms (with no prescaler). The time-out periods vary with temperature, V_{DD} and process variations from part to part (refer to Table 5-3). If longer time-out periods are desired, a prescaler with a division ratio of up to 1:128 can be assigned to the WDT under software control by writing to the OPTION_REG register. Thus, time-out periods up to 2.3 seconds can be realized.

The `CLRWDT` and `SLEEP` instructions clear the WDT and the prescaler, if assigned to the WDT, and prevent it from timing out and generating a device reset.

The $\overline{TO}$ bit in the STATUS register will be cleared upon a Watchdog Timer time out.

17.3 WDT Programming Considerations

Under worst-case conditions (i.e., V_{DD} = Minimum, Temperature = Maximum, Maximum WDT prescaler), it may take several seconds before a WDT time out occurs.

FIGURE 17-1: WATCHDOG TIMER WITH SHARED PRESCALE BLOCK DIAGRAM

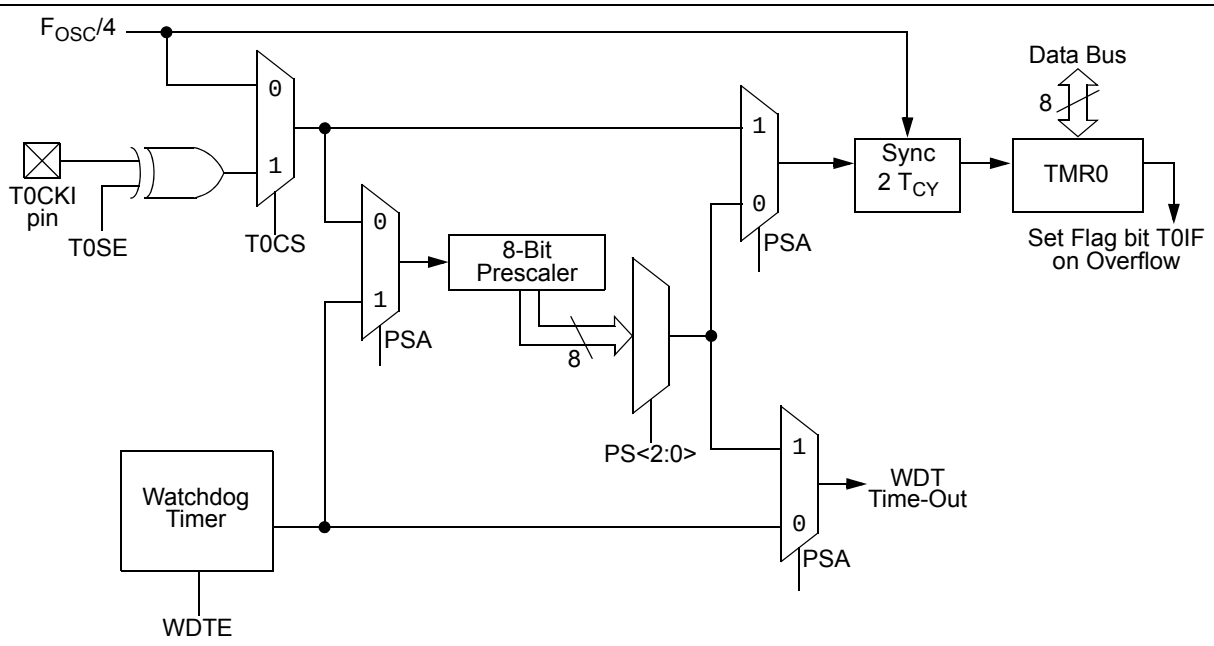

Note 1: T0SE, T0CS, PSA, PS<2:0> are bits in the OPTION_REG register.

2: WDTE bit is in the CONFIG register.

TABLE 17-1: WDT STATUS

Conditions	WDT
WDTE = 0	Cleared
CLRWDT Command	
Exit Sleep	

TABLE 17-2: SUMMARY OF REGISTERS ASSOCIATED WITH WATCHDOG TIMER

Name	Bit 7	Bit 6	Bit 5	Bit 4	Bit 3	Bit 2	Bit 1	Bit 0	Register on page
OPTION_REG	$\overline{\text{RAPU}}$	INTEDG	T0CS	T0SE	PSA	PS2	PS1	PS0	90

Legend: Shaded cells are not used by the Watchdog Timer.

Note 1: Refer to Register 12-1 for operation of all the bits in the CONFIG register.

TABLE 17-3: SUMMARY OF CONFIGURATION WORD ASSOCIATED WITH WATCHDOG TIMER

Name	Bits	Bit -/7	Bit -/6	Bit 13/5	Bit 12/4	Bit 11/3	Bit 10/2	Bit 9/1	Bit 8/0	Register on page
CONFIG	13:8	—	—	$\overline{\text{DBGEN}}$	—	WRT1	WRT0	—	BOREN	93
	7:0	—	$\overline{\text{CP}}$	MCLRE	$\overline{\text{PWRTE}}$	WDTE	—	—	—	

Legend: — = unimplemented location, read as ‘1’. Shaded cells are not used by Watchdog Timer.

© 2015-2018 Microchip Technology Inc.

18.0 FLASH PROGRAM MEMORY CONTROL

The Flash program memory is readable and writable during normal operation (full V_{IN} range). This memory is not directly mapped in the register file space. Instead, it is indirectly addressed through the Special Function Registers (refer to Registers 18-1 to 18-5). There are six SFRs used to read and write this memory:

- PMCON1
- PMCON2
- PMDATL
- PMDATH
- PMADRL
- PMADRH

When interfacing the program memory block, the PMDATL and PMDATH registers form a two-byte word which holds the 14-bit data for read/write, while the PMADRL and PMADRH registers form a two-byte word, which holds the 13-bit address of the FLASH location being accessed. These devices have 8000 words of program Flash with an address range from 0000h to 1FFFh.

The program memory allows single-word read and a four-word write. A four-word write automatically erases the row of the location and writes the new data (erase before write).

The write time is controlled by an on-chip timer. The write/erase voltages are generated by an on-chip charge pump rated to operate over the voltage range of the device for byte or word operations.

When the device is code-protected, the CPU may continue to read and write the Flash program memory.

Depending on the settings of the Flash Program Memory Enable (WRT<1:0>) bits, the device may or may not be able to write certain blocks of the program memory; however, reads of the program memory are allowed.

When the Flash Program Memory Code Protection ($\overline{CP}$) bit is enabled, the program memory is code-protected and the device programmer (ICSP) cannot access data or program memory.

18.1 PMADRH and PMADRL Registers

The PMADRH and PMADRL registers can address up to a maximum of 8000 words of program memory.

When selecting a program address value, the Most Significant Byte (MSB) of the address is written to the PMADRH register and the Least Significant Byte (LSB) is written to the PMADRL register.

18.2 PMCON1 and PMCON2 Registers

The PMCON1 register is the control register for the data program memory accesses.

Control bits RD and WR initiate read and write, respectively. In software, these bits can only be set, not cleared. They are cleared in hardware at completion of the read or write operation. The inability to clear the WR bit in software prevents the accidental premature termination of a write operation.

The WREN bit, when set, will allow a write operation. On power-up, the WREN bit is clear.

The CALSEL bit allows the user to read locations in test memory in case there are calibration bits stored in the calibration word locations that need to be transferred to SFR trim registers. The CALSEL bit is only for reads. If a write operation is attempted with CALSEL = 1, no write occurs.

PMCON2 is not a physical register. Reading PMCON2 will read all '0's. The PMCON2 register is used exclusively in the flash memory write sequence.

18.3 Flash Program Memory Control Registers

REGISTER 18-1: PMDATL: PROGRAM MEMORY DATA LOW BYTE REGISTER

R/W-0	R/W-0	R/W-0	R/W-0	R/W-0	R/W-0	R/W-0	R/W-0
PMDATL<7:0>							
bit 7							bit 0

Legend:			
R = Readable bit	W = Writable bit	U = Unimplemented bit, read as ‘0’	
-n = Value at POR	‘1’ = Bit is set	‘0’ = Bit is cleared	x = Bit is unknown

bit 7-0 **PMDATL<7:0>**: 8 Least Significant Data bits to write or read from program memory

REGISTER 18-2: PMADRL: PROGRAM MEMORY ADDRESS LOW BYTE REGISTER

R/W-0	R/W-0	R/W-0	R/W-0	R/W-0	R/W-0	R/W-0	R/W-0
PMADRL<7:0>							
bit 7							bit 0

Legend:			
R = Readable bit	W = Writable bit	U = Unimplemented bit, read as ‘0’	
-n = Value at POR	‘1’ = Bit is set	‘0’ = Bit is cleared	x = Bit is unknown

bit 7-0 **PMADRL<7:0>**: 8 Least Significant Address bits for Program Memory Read/Write Operation

REGISTER 18-3: PMDATH: PROGRAM MEMORY DATA HIGH BYTE REGISTER

U-0	U-0	R/W-0	R/W-0	R/W-0	R/W-0	R/W-0	R/W-0
—	—	PMDATH<5:0>					
bit 7							bit 0

Legend:			
R = Readable bit	W = Writable bit	U = Unimplemented bit, read as ‘0’	
-n = Value at POR	‘1’ = Bit is set	‘0’ = Bit is cleared	x = Bit is unknown

bit 7-6 **Unimplemented:** Read as ‘0’

bit 5-0 **PMDATH<5:0>**: 6 Most Significant Data bits from program memory

© 2015-2018 Microchip Technology Inc.

REGISTER 18-4: PMADRH: PROGRAM MEMORY ADDRESS HIGH BYTE REGISTER

U-0	U-0	U-0	U-0	R/W-0	R/W-0	R/W-0	R/W-0
—	—	—	—	PMADRH<3:0>			
bit 7							bit 0

Legend:			
R = Readable bit	W = Writable bit	U = Unimplemented bit, read as ‘0’	
-n = Value at POR	‘1’ = Bit is set	‘0’ = Bit is cleared	x = Bit is unknown

bit 7-4 **Unimplemented:** Read as ‘0’

bit 3-0 **PMADRH<3:0>**: 4 Most Significant Address bits or High bits for program memory reads

REGISTER 18-5: PMCON1: PROGRAM MEMORY CONTROL REGISTER 1

U-1	R/W-0	U-0	U-0	U-0	R/W-0	R/S-0	R/S-0
—	CALSEL	—	—	—	WREN	WR	RD
bit 7							bit 0

Legend:			
R = Readable bit	W = Writable bit	U = Unimplemented bit, read as ‘0’	
-n = Value at POR	‘1’ = Bit is set	‘0’ = Bit is cleared	x = Bit is unknown
S = Bit can only be set			

bit 7 **Unimplemented:** Read as '1'

bit 6 **CALSEL:** Program Memory calibration space select bit
- 1 = Select test memory area for reads only (for loading calibration trim registers)
- 0 = Select user area for reads

bit 5-3 **Unimplemented:** Read as '0'

bit 2 **WREN:** Program Memory Write Enable bit
- 1 = Allows write cycles
- 0 = Inhibits write to the EEPROM

bit 1 **WR:** Write Control bit
- 1 = Initiates a write cycle to program memory. (The bit is cleared by hardware when write is complete. The WR bit can only be set (not cleared) in software.)
- 0 = Write cycle to the Flash memory is complete

bit 0 **RD:** Read Control bit
- 1 = Initiates a program memory read. (The read takes one cycle. The RD is cleared in hardware; the RD bit can only be set (not cleared) in software.)
- 0 = Does not initiate a Flash memory read

18.3.1 READING THE FLASH PROGRAM MEMORY

To read a program memory location, the user must write two bytes of the address to the PMADRL and PMADRH registers, and then set control bit RD (bit 0 in the PMCON1register). Once the read control bit is set, the Program Memory Flash controller will use the second instruction cycle to read the data. This causes the second instruction immediately following the `BSF PMCON1,RD` instruction to be ignored. The data is available, in the very next cycle, in the PMDATL and PMDATH registers; it can be read as two bytes in the following instructions. PMDATL and PMDATH registers will hold this value until another read or until it is written to by the user (during a write operation).

EXAMPLE 18-1: FLASH PROGRAM READ

```
BANKSELPM_ADR; Change STATUS bits RP1:0 to select bank with PMADR
MOVLWMS_PROG_PM_ADDR;
MOVWFPMADRH; MS Byte of Program Address to read
MOVLWLS_PROG_PM_ADDR;
MOVWFPMADRL; LS Byte of Program Address to read
BANKSELPMCON1; Bank to containing PMCON1
BSF PMCON1, RD; EE Read

NOP     ; First instruction after BSF PMCON1,RD executes normally

NOP     ; Any instructions here are ignored as program
        ; memory is read in second cycle after BSF PMCON1,RD
        ;
BANKSELPMDATL; Bank to containing PMADRL
MOVFPMDATL, W; W = LS Byte of Program PMDATL
MOVFPMDATH, W; W = MS Byte of Program PMDATL
```

FIGURE 18-1: FLASH PROGRAM MEMORY READ CYCLE EXECUTION – NORMAL MODE

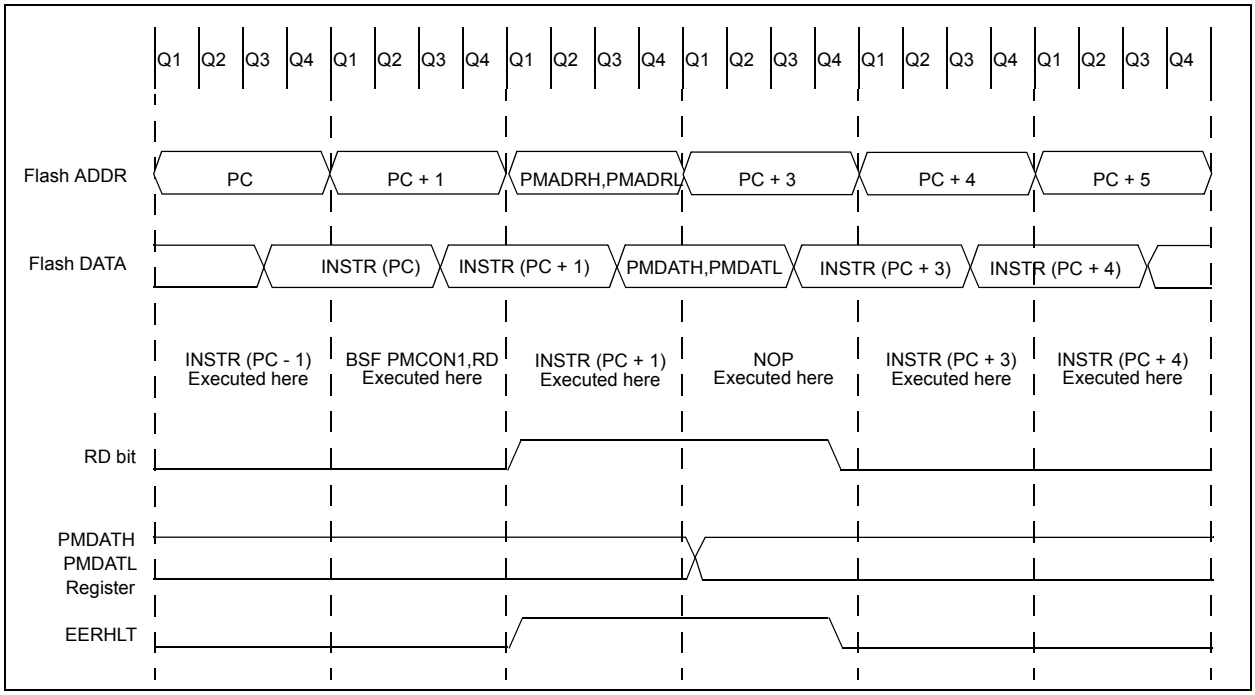

© 2015-2018 Microchip Technology Inc.

18.3.2 WRITING TO THE FLASH PROGRAM MEMORY

A word of the Flash program memory may only be written to if the word is in an unprotected segment of memory, as defined in **Section 12.1 "Configuration Word"** (bits <WRT1:0>).

> **Note:** The write-protect bits are used to protect the user's program from modification by the user's code. They have no effect when programming is performed by ICSP. The code-protect bits, when programmed for code protection, will prevent the program memory from being written via the ICSP interface.

Flash program memory must be written in eight-word blocks. Refer to Figures 18-2 and 18-3 for more details. A block consists of eight words with sequential addresses, with a lower boundary defined by an address, where PMADRL<1:0> = `00`. All block writes to program memory are done as 16-word erase by eight-word write operations. The write operation is edge-aligned and cannot occur across boundaries.

To write program data, the WREN bit must first be loaded into the buffer registers (refer to Figure 18-2). This is accomplished by first writing the destination address to PMADRL and PMADRH and then writing the data to PMDATL and PMDATH. After the address and data have been set, the following sequence of events must be executed:

1. Write 55h, then AAh, to PMCON2 (Flash programming sequence)
2. Set the WR control bit in the PMCON1 register

All eight buffer register locations should be written to with correct data. If less than eight words are being written to in the block of eight words, a read from the program memory location(s) not being written to must be performed. This takes the data from the program location(s) not being written and loads it into the PMDATL and PMDATH registers. Then the sequence of events to transfer data to the buffer registers must be executed.

To transfer data from the buffer registers to the program memory, the PMADRL and PMADRH must point to the last location in the eight-word block (PMADRL<2:0> = `111`). Then the following sequence of events must be executed:

1. Write 55h, then AAh, to PMCON2 (Flash programming sequence).
2. Set control bit WR in the PMCON1 register to begin the write operation.

The user must follow the same specific sequence to initiate the write for each word in the program block, writing each program word in sequence (`000`, `001`, `010`, `011`). When the write is performed on the last word (PMADRL<2:0> = `111`), a block of sixteen words is automatically erased and the content of the eight-word buffer registers are written into the program memory.

After the `BSF PMCON1,WR` instruction, the processor requires two cycles to set up the erase/write operation. The user must place two `NOP` instructions after the WR bit is set. Since data is being written to buffer registers, the writing of the first three words of the block appears to occur immediately. The processor will halt internal operations for the typical 4 ms only during the cycle in which the erase takes place (i.e., the last word of the sixteen-word block erase). This is not Sleep mode, as the clocks and peripherals will continue to run. After the four-word write cycle, the processor will resume operation with the third instruction after the PMCON1 write instruction. The above sequence must be repeated for the higher 12 words.

> **Note:** An erase is only initiated for the write of four words just after a row boundary; or PMCON1<WR> set with PMADRL<3:0> = `xxxx0011`.

Refer to Figure 18-2 for a block diagram of the buffer registers and the control signals for test mode.

18.3.3 PROTECTION AGAINST SPURIOUS WRITE

There are conditions when the device should not write to the program memory. To protect against spurious writes, various mechanisms have been built in. On power-up, WREN is cleared. Also, the Power-Up Timer (72 ms duration) prevents program memory writes.

The write initiate sequence and the WREN bit help prevent an accidental write during a power glitch or software malfunction.

18.3.4 OPERATION DURING CODE PROTECT

When the device is code-protected, the CPU is able to read and write unscrambled data to the program memory. The test mode access is disabled.

18.3.5 OPERATION DURING WRITE PROTECT

When the program memory is write-protected, the CPU can read and execute from the program memory. The portions of program memory that are write-protected cannot be modified by the CPU using the PMCON registers. The write protection has no effect in ICSP mode.

© 2015-2018 Microchip Technology Inc.

FIGURE 18-2: BLOCK WRITES TO 8000 FLASH PROGRAM MEMORY

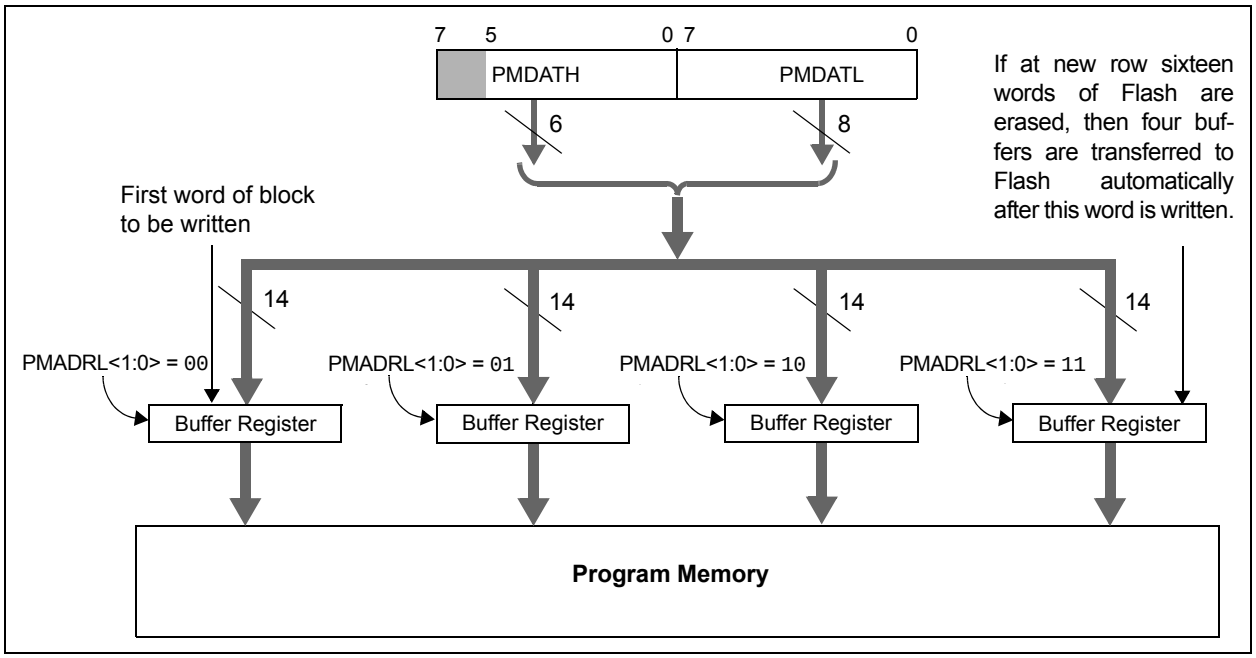

FIGURE 18-3: FLASH PROGRAM MEMORY LONG WRITE CYCLE EXECUTION

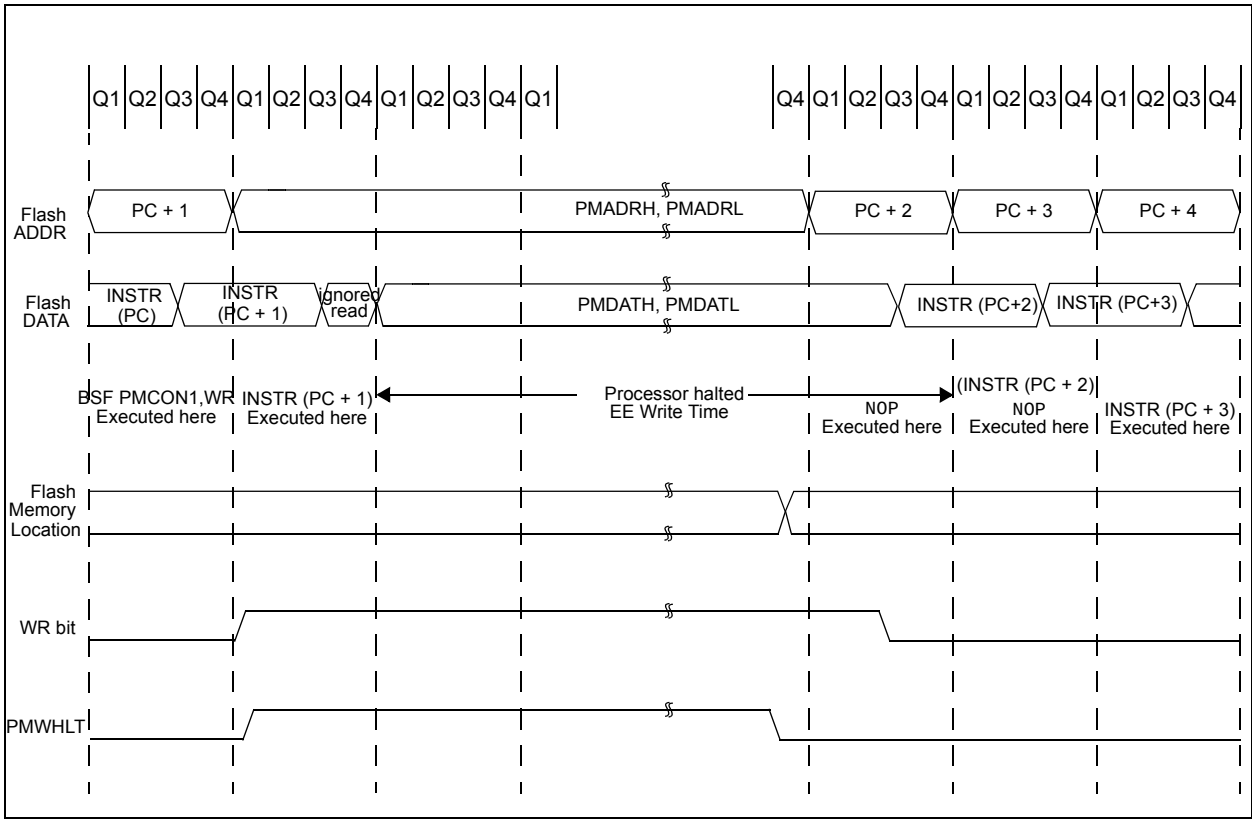

© 2015-2018 Microchip Technology Inc.

19.0 I/O PORTS

In general, when a peripheral is enabled, that pin may not be used as a general purpose I/O pin.

Each port has the registers for its operation. These registers are:

- TRISGPx registers (data direction register)
- PORTGPx registers (read the levels on the pins of the device)

Some ports may have one or more of the following additional registers. These registers are:

- ANSELx (analog select)
- WPUGPx (weak pull-up)

Ports with analog functions also have an ANSELx register, which can disable the digital input and save power. A simplified model of a generic I/O port, without the interfaces to other peripherals, is shown in Figure 19-1.

FIGURE 19-1: GENERIC I/O PORTGPX OPERATION

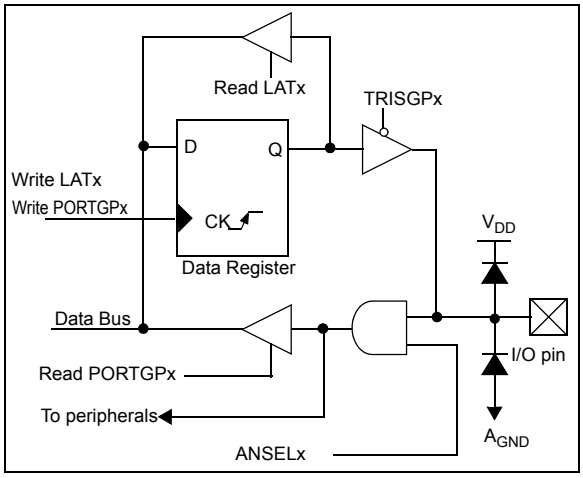

EXAMPLE 19-1: INITIALIZING PORTGPA

```
; This code example illustrates
; initializing the PORTGPA register. The
; other ports are initialized in the same
; manner.

BANKSEL PORTGPA;
CLRF    PORTGPA;Init PORTA
BANKSEL ANSELA;
CLRF    ANSELA;digital I/O
BANKSEL TRISGPA;
MOVLW   B'00011111';Set GPA<3:0> as
            ;inputs
MOVWF   TRISGPA;and set GPA<7:5> as
            ;outputs
```

19.1 PORTGPA and TRISGPA Registers

PORTGPA is an 8-bit-wide, bidirectional port consisting of five CMOS I/Os, one open-drain I/O and one open-drain input-only pin (GPA4 is not available). The corresponding data direction register is TRISGPA. Setting a TRISGPA bit to `1` makes the corresponding PORTGPA pin an input (i.e., disable the output driver). Clearing a TRISGPA bit set to `0` makes the corresponding PORTGPA pin an output (i.e., enables output driver). The exception is GPA5, which is input only and its TRISGPA bit always reads as '`1`'. Example 19-1 shows how to initialize an I/O port.

Reading the PORTGPA register reads the status of the pins, whereas writing to it writes to the PORT latch. All write operations are read-modify-write operations.

The TRISGPA register controls the PORTGPA pin output drivers, even when they are being used as analog inputs. The user must ensure the bits in the TRISGPA register are maintained set when using them as analog inputs. I/O pins configured as analog input always read '`0`'. If the pin is configured for a digital output (either port or alternate function), the TRISGPA bit must be cleared in order for the pin to drive the signal, and a read reflects the state of the pin.

19.1.1 INTERRUPT-ON-CHANGE

Each PORTGPA pin is individually configurable as an interrupt-on-change pin. Control bits IOCB<7:4> and IOCB<2:0> enable or disable the interrupt function for each pin. The interrupt-on-change feature is disabled on a Power-on Reset. Reference **Section 20.0 "Interrupt-On-Change"** for more information.

19.1.2 WEAK PULL-UPS

PORTGPA <3:0> and PORTGPA5 have an internal weak pull-up. PORTGPA<7:6> do not have internal weak pull-ups. Individual control bits can enable or disable the internal weak pull-ups (refer to Register 19-3). The weak pull-up is automatically turned off when the port pin is configured as an output or as an alternate function. It is also automatically disabled on a Power-on Reset where the RAPU bit is set by default. The weak pull-up on GPA5 is enabled when configured as $\overline{MCLR}$ pin by setting bit 5 in the CONFIG register, and disabled when GPA5 is an I/O. The weak pull-up on GPA5 is automatically enabled when the pin is configured as $\overline{MCLR}$. There is no software control in this case. There is software control of the weak pull-up, just like all of the other pins, only when the pin is configured as an I/O,

19.1.3 ANSELA REGISTER

The ANSELA register is used to configure the input mode of an I/O pin to analog. Setting the appropriate ANSELA bit high causes all digital reads on the pin to be read as '0' and allow analog functions on the pin to operate correctly.

The state of the ANSELA bits has no effect on digital output functions. A pin with TRISGPA cleared and ANSELx set still operates as a digital output, but the input mode is analog. This can cause unexpected behavior when executing read-modify-write instructions on the affected port.

Note: The ANSELA bits default to the Analog mode after Reset. To use any pins as digital general purpose or peripheral inputs, the corresponding ANSEL bits must be initialized to '0' by the user's software.

19.1.4 PORTGPA FUNCTIONS ALAND OUTPUT PRIORITIES

Each PORTGPA pin is multiplexed with other functions. The pins, their combined functions and their output priorities are shown in Table 19-1. For additional information, refer to the appropriate section in this data sheet.

Pin GPA7 in the PORTGPA register is a true open-drain pin with no connection back to V_{DD}.

When multiple outputs are enabled, the actual pin control goes to the peripheral with the highest priority.

Analog input functions, such as ADC, are not shown in the priority lists. These inputs are active when the I/O pin is set for Analog mode using the ANSELA register. Digital output functions may control the pin when it is in Analog mode with the priority shown in Table 19-1.

TABLE 19-1: PORTGPA OUTPUT PRIORITY

Pin Name	Function Priority (1)
GPA0	GPA0
	TEST_OUT
GPA1	GPA1
	CLKPIN
GPA2	GPA2
	T0CKI
	INT
GPA3	GPA3
GPA5	GPA5 (open-drain, input only)
	$\overline{\text{MCLR}}$
	TEST_EN
GPA6	GPA6
	CCD
	ICSPDAT
GPA7	GPA7 (open-drain output, ST input)
	SCL

Note 1: Output function priority listed from lowest to highest.

© 2015-2018 Microchip Technology Inc.

REGISTER 19-1: PORTGPA: PORTGPA REGISTER

R/W-x	R/W-x	R-x	U-0	R/W-x	R/W-x	R/W-x	R/W-x
GPA7	GPA6	GPA5	—	GPA3	GPA2	GPA1	GPA0
bit 7							bit 0

Legend:		
R = Readable bit	W = Writable bit	U = Unimplemented bit, read as ‘0’
u = Bit is unchanged	x = Bit is unknown	-n = Value at POR
‘1’ = Bit is set	‘0’ = Bit is cleared	

bit 7 **GPA7:** General Purpose Open-Drain I/O pin
`1` = Port pin is > V_{IH}
`0` = Port pin is < V_{IL}

bit 6 **GPA6:** General Purpose I/O pin
`1` = Port pin is > V_{IH}
`0` = Port pin is < V_{IL}

bit 5 **GPA5/MCLR/TEST_EN5:** General Purpose Open-Drain input pin

bit 4 **Unimplemented:** Read as ‘`0`’

bit 3-0 **GPA<3:0>:** General Purpose I/O pin
`1` = Port pin is > V_{IH}
`0` = Port pin is < V_{IL}

REGISTER 19-2: TRISGPA: PORTGPA TRI-STATE REGISTER

R/W-1	R/W-1	R-1	U-0	R/W-1	R/W-1	R/W-1	R/W-1
TRISA7	TRISA6	TRISA5	—	TRISA3	TRISA2	TRISA1	TRISA0
bit 7							bit 0

Legend:		
R = Readable bit	W = Writable bit	U = Unimplemented bit, read as ‘0’
u = Bit is unchanged	x = Bit is unknown	-n = Value at POR
‘1’ = Bit is set	‘0’ = Bit is cleared	

bit 7-6 **TRISA<7:6>:** PORTGPA Tri-State Control bits
`1` = PORTGPA pin configured as an input (tri-stated)
`0` = PORTGPA pin configured as an output

bit 5 **TRISA5:** GPA5 Port Tri-State Control bit
This bit is always ‘`1`’ as GPA5 is an input only

bit 4 **Unimplemented:** Read as ‘`0`’

bit 3-0 **TRISA<3:0>:** PORTGPA Tri-State Control bits
`1` = PORTGPA pin configured as an input (tri-stated)
`0` = PORTGPA pin configured as an output

REGISTER 19-3: WPUGPA: WEAK PULL-UP PORTGPA REGISTER [1]

U-0	U-0	R/W-1	U-0	R/W-1	R/W-1	R/W-1	R/W-1
—	—	WPUA5 [2]	—	WPUA3	WPUA2	WPUA1	WPUA0
bit 7							bit 0

Legend:		
R = Readable bit	W = Writable bit	U = Unimplemented bit, read as ‘0’
u = Bit is unchanged	x = Bit is unknown	-n = Value at POR
‘1’ = Bit is set	‘0’ = Bit is cleared	

bit 7-6 **Unimplemented:** Read as ‘0’

bit 5 **WPUA5:** Weak Pull-Up Register bit
1 = Pull-up enabled
0 = Pull-up disabled

bit 4 **Unimplemented:** Read as ‘0’

bit 3-0 **WPUA<3:0>:** Weak Pull-Up Register bits
1 = Pull-up enabled
0 = Pull-up disabled

Note 1: The weak pull-up device is enabled only when the global $\overline{\text{RAPU}}$ bit is enabled, the pin is in input mode (TRISGPA = 1) and the individual WPUA bit is enabled (WPUA = 1), and the pin is not configured as an analog input.

2: GPA5 weak pull-up is also enabled when the pin is configured as $\overline{\text{MCLR}}$ in the CONFIG register.

REGISTER 19-4: ANSELA: ANALOG SELECT GPA REGISTER

U-0	U-0	U-0	U-0	R/W-1	R/W-1	R/W-1	R/W-1
—	—	—	—	ANSA3	ANSA2	ANSA1	ANSA0
bit 7							bit 0

Legend:		
R = Readable bit	W = Writable bit	U = Unimplemented bit, read as ‘0’
u = Bit is unchanged	x = Bit is unknown	-n = Value at POR
‘1’ = Bit is set	‘0’ = Bit is cleared	

bit 7-4 **Unimplemented:** Read as ‘0’

bit 3-0 **ANSA<3:0>:** Analog Select GPA Register bits
1 = Analog input. Pin is assigned as analog input [1]
0 = Digital I/O. Pin is assigned to port or special function

Note 1: Setting a pin to an analog input automatically disables the digital input circuitry, weak pull-ups and interrupt-on-change if available. The corresponding TRISA bit must be set to Input mode in order to allow external control of the voltage on the pin.

© 2015-2018 Microchip Technology Inc.

TABLE 19-2: SUMMARY OF REGISTERS ASSOCIATED WITH PORTGPA

Name	Bit 7	Bit 6	Bit 5	Bit 4	Bit 3	Bit 2	Bit 1	Bit 0	Register on page
ANSELA	—	—	—	—	ANSA3	ANSA2	ANSA1	ANSA0	128
OPTION_REG	$\overline{\text{RAPU}}$	INTEDG	T0CS	T0SE	PSA	PS2	PS1	PS0	90
PORTGPA	GPA7	GPA6	GPA5	—	GPA3	GPA2	GPA1	GPA0	127
TRISGPA	TRISA7	TRISA6	TRISA5	—	TRISA3	TRISA2	TRISA1	TRISA0	127
WPUGPA	—	—	WPUA5	—	WPUA3	WPUA2	WPUA1	WPUA0	128

Legend: — = unimplemented locations read as '0'. Shaded cells are not used by PORTGPA.

19.2 PORTGPB and TRISGPB Registers

Due to special function pin requirements, a limited number of the PORTGPB I/Os are utilized.

On the 24-pin QFN MCP19116, GPB0 and GPB1 are implemented. GPB0 is an open-drain general purpose I/O and SDA pin. GPB1 is a general purpose I/O, analog input and VREF2 DAC output.

The 28-pin QFN MCP19116 has four additional general purpose PORTGPB I/O pins. The corresponding data direction register is TRISGPB. Setting a TRISGPB bit to 1 will make the corresponding PORTGPB pin an input (i.e., disable the output driver). Clearing a TRISGPB bit to 0 will make the corresponding PORTGPB pin an output (i.e., enable the output driver). Example 19-1 shows how to initialize an I/O port.

Some pins for PORTGPB are multiplexed with an alternate function for the peripheral or a clock function. In general, when a peripheral or clock function is enabled, that pin may not be used as a general purpose I/O pin.

Reading the PORTGPB register reads the status of the pins, whereas writing to it writes to the PORT latch. All write operations are read-modify-write operations.

The TRISGPB register controls the PORTGPB pin output drivers, even when they are being used as analog inputs. It is recommended that the user ensures the bits in the TRISGPB register are maintained set when using them as analog inputs. I/O pins configured as analog input always read '0'. If the pin is configured for a digital output (either port or alternate function), the TRISGPB bit must be cleared in order for the pin to drive the signal and a read will reflect the state of the pin.

19.2.1 INTERRUPT-ON-CHANGE

Each PORTGPB pin is individually configurable as an interrupt-on-change pin. Control bits IOCB<7:4> and IOCB<2:0> enable or disable the interrupt function for each pin. The interrupt-on-change feature is disabled on a Power-on Reset. Reference **Section 20.0 "Interrupt-On-Change"** for more information.

19.2.2 WEAK PULL-UPS

Each of the PORTGPB pins has an individually configurable internal weak pull-up. Control bits WPUB<7:4> and WPUB<1> enable or disable each pull-up (refer to Register 19-7). Each weak pull-up is automatically turned off when the port pin is configured as an output. All pull-ups are disabled on a Power-on Reset by the $\overline{\text{RAPU}}$ bit in the OPTION_REG register.

19.2.3 ANSELB REGISTER

The ANSELB register is used to configure the input mode of an I/O pin to analog. Setting the appropriate ANSELB bit high will cause all digital reads on the pin to be read as '0' and allow analog functions on the pin to operate correctly.

The state of the ANSELB bits has no effect on the digital output functions. A pin with TRISGPB clear and ANSELB set will still operate as a digital output, but the input mode will be analog. This can cause unexpected behavior when executing read-modify-write instructions on the affected port.

The TRISGPB register controls the PORTGPB pin output drivers, even when they are being used as analog inputs. The user should ensure the bits in the TRISGPB register are maintained set when using them as analog inputs. I/O pins configured as analog input always read '0'.

Note: The ANSELB bits default to the Analog mode after Reset. To use any pins as digital general purpose or peripheral inputs, the corresponding ANSELB bits must be initialized to '0' by the user's software.

19.2.4 PORTGPB FUNCTIONS AND OUTPUT PRIORITIES

Each PORTGPB pin is multiplexed with other functions. The pins, their combined functions and their output priorities are shown in Table 19-3. For additional information, refer to the appropriate section in this data sheet.

GPB0 pin in the PORTGPB register is a true open-drain pin with no connection back to V_{DD}.

When multiple outputs are enabled, the actual pin control goes to the peripheral with the highest priority.

Analog input functions, such as ADC, and some digital input functions are not included in Table 19-3. These inputs are active when the I/O pin is set for Analog mode using the ANSELB register. Digital output functions may control the pin when it is in Analog mode, with the priority shown in Table 19-3.

TABLE 19-3: PORTGPB OUTPUT PRIORITY

Pin Name	Function Priority (1)
GPB0	GPB0 (open-drain input/output)
	SDA
GPB1	GPB1
	VREF2
GPB4	GPB4 (**MCP19117**)
	ICSPDAT
GPB5	GPB5 (**MCP19117**)
GPB6	GPB6 (**MCP19117**)
GPB7	GPB7 (**MCP19117**)
	CCD2

Note 1: Output function priority listed from lowest to highest.

REGISTER 19-5: PORTGPB: PORTGPB REGISTER

R/W-x	R/W-x	R/W-x	R/W-x	U-0	U-0	R/W-x	R/W-x
GPB7 (1)	GPB6 (1)	GPB5 (1)	GPB4 (1)	—	—	GPB1	GPB0
bit 7							bit 0

Legend:		
R = Readable bit	W = Writable bit	U = Unimplemented bit, read as ‘0’
u = bit is unchanged	x = Bit is unknown	-n = Value at POR
‘1’ = Bit is set	‘0’ = Bit is cleared	

bit 7-4 **GPB<7:4>:** General Purpose I/O Pin bits
`1` = Port pin is > V_{IH}
`0` = Port pin is < V_{IL}

bit 3-2 **Unimplemented:** Read as ‘`0`’

bit 1-0 **GPB<1:0>:** General Purpose I/O Pin bits
`1` = Port pin is > V_{IH}
`0` = Port pin is < V_{IL}

Note 1: MCP19117 only.

© 2015-2018 Microchip Technology Inc.

REGISTER 19-6: TRISGPB: PORTGPB TRI-STATE REGISTER

R/W-1	R/W-1	R/W-1	R/W-1	U-0	U-0	R/W-1	R/W-1
TRISB7 (1)	TRISB6 (1)	TRISB5 (1)	TRISB4 (1)	—	—	TRISB1	TRISB0
bit 7							bit 0

Legend:		
R = Readable bit	W = Writable bit	U = Unimplemented bit, read as ‘0’
u = Bit is unchanged	x = Bit is unknown	-n = Value at POR
‘1’ = Bit is set	‘0’ = Bit is cleared	

bit 7-4 **TRISB<7:4>**: PORTGPB Tri-State Control bits (1)
`1` = PORTGPB pin configured as an input (tri-stated)
`0` = PORTGPB pin configured as an output

bit 3-2 **Unimplemented:** Read as ‘`0`’

bit 1-0 **TRISB<1:0>**: PORTGPB Tri-State Control bits
`1` = PORTGPB pin configured as an input (tri-stated)
`0` = PORTGPB pin configured as an output

Note 1: MCP19117 only.

REGISTER 19-7: WPUGPB: WEAK PULL-UP PORTGPB REGISTER (1)

R/W-1	R/W-1	R/W-1	R/W-1	U-0	U-0	R/W-1	U-0
WPUB7 (2)	WPUB6 (2)	WPUB5 (2)	WPUB4 (2)	—	—	WPUB1	—
bit 7							bit 0

Legend:		
R = Readable bit	W = Writable bit	U = Unimplemented bit, read as ‘0’
u = Bit is unchanged	x = Bit is unknown	-n = Value at POR
‘1’ = Bit is set	‘0’ = Bit is cleared	

bit 7-4 **WPUB<7:4>**: Weak Pull-up Register bits (2)
`1` = Pull-up enabled
`0` = Pull-up disabled

bit 3-2 **Unimplemented:** Read as ‘`0`’

bit 1 **WPUB<1>**: Weak Pull-up Register bit
`1` = Pull-up enabled
`0` = Pull-up disabled

bit 0 **Unimplemented:** Read as ‘`0`’

Note 1: The weak pull-up device is enabled only when the global $\overline{\text{RAPU}}$ bit is enabled, the pin is in input mode (TRISGPA = `1`) and the individual WPUB bit is enabled (WPUB = `1`), and the pin is not configured as an analog input.

2: MCP19117 only.

REGISTER 19-8: ANSELB: ANALOG SELECT GPB REGISTER

U-0	R/W-1	R/W-1	R/W-1	U-0	U-0	R/W-1	U-0
—	ANSB6 (1)	ANSB5 (1)	ANSB4 (1)	—	—	ANSB1	—
bit 7							bit 0

Legend:		
R = Readable bit	W = Writable bit	U = Unimplemented bit, read as ‘0’
u = Bit is unchanged	x = Bit is unknown	-n = Value at POR
‘1’ = Bit is set	‘0’ = Bit is cleared	

bit 7 **Unimplemented:** Read as ‘0’

bit 6-4 **ANSB<6:4>**: Analog Select GPA Register bits
1 = Analog input. Pin is assigned as analog input (2)
0 = Digital I/O. Pin is assigned to port or special function

bit 3-2 **Unimplemented:** Read as ‘0’

bit 1 **ANSB<1>**: Analog Select GPA Register bits
1 = Analog input. Pin is assigned as analog input (2)
0 = Digital I/O. Pin is assigned to port or special function

bit 0 **Unimplemented:** Read as ‘0’

Note 1: MCP19117 only.
2: Setting a pin to an analog input automatically disables the digital input circuitry, weak pull-ups and interrupt-on-change if available. The corresponding TRIS bit must be set to Input mode in order to allow external control of the voltage on the pin.

TABLE 19-4: SUMMARY OF REGISTERS ASSOCIATED WITH PORTGPB

Name	Bit 7	Bit 6	Bit 5	Bit 4	Bit 3	Bit 2	Bit 1	Bit 0	Register on page
ANSELB	—	ANSB6 (1)	ANSB5 (1)	ANSB4 (1)	—	—	ANSB1	—	132
OPTION_REG	$\overline{\text{RAPU}}$	INTEDG	T0CS	T0SE	PSA	PS2	PS1	PS0	90
PORTGPB	GPB7 (1)	GPB6 (1)	GPB5 (1)	GPB4 (1)	—	—	GPB1	GPB0	130
TRISGPB	TRISB7 (1)	TRISB6 (1)	TRISB5 (1)	TRISB4 (1)	—	—	TRISB1	TRISB0	131
WPUGPB	WPUB7 (1)	WPUB6 (1)	WPUB5 (1)	WPUB4 (1)	—	—	WPUB1	—	131

Legend: — = unimplemented locations, read as ‘0’. Shaded cells are not used by the PORTGPB register.
Note 1: MCP19117 only.

© 2015-2018 Microchip Technology Inc.

20.0 INTERRUPT-ON-CHANGE

Each PORTGPA and PORTGPB pin is individually configurable as an interrupt-on-change pin. Control bits IOCA and IOCB enable or disable the interrupt function for each pin. Refer to Registers 20-1 and 20-2. The interrupt-on-change is disabled on a Power-on Reset.

The interrupt-on-change on GPA5 is disabled when configured as $\overline{\text{MCLR}}$ pin in the CONFIG register.

For enabled interrupt-on-change pins, the values are compared with the old value latched on the last read of PORTGPA or PORTGPB. The mismatched outputs of the last read of all the PORTGPA and PORTGPB pins are OR'ed together to set the Interrupt-on-Change Interrupt Flag (IOCF) bit in the INTCON register.

20.1 Enabling the Module

To allow individual port pins to generate an interrupt, the IOCE bit in the INTCON register must be set. If the IOCE bit is disabled, the edge detection on the pin will still occur, but an interrupt will not be generated.

20.2 Individual Pin Configuration

To enable a pin to detect an interrupt-on-change, the associated IOCAx or IOCBx bit in the IOCA or IOCB registers is set.

20.3 Clearing Interrupt Flags

The user, in the Interrupt Service Routine, clears the interrupt by:

a) Any read of PORTGPA or PORTGPB AND Clear flag bit IOCF. This ends the mismatch condition.

   OR

b) Any write of PORTGPA or PORTGPB AND Clear flag bit IOCF. This ends the mismatch condition.

A mismatch condition continues to set flag bit IOCF. Reading PORTGPA or PORTGPB ends the mismatch condition and allows flag bit IOCF to be cleared. The latch holding the last read value is not affected by a $\overline{\text{MCLR}}$ Reset. After this Reset, the IOCF flag continues to be set if a mismatch is present.

Note:	If a change on the I/O pin occurs when any PORTGPA or PORTGPB operation is being executed, the IOCF interrupt flag may not get set.

20.4 Operation in Sleep

The interrupt-on-change interrupt sequence wakes the device from Sleep mode, if the IOCE bit is set.

20.5 Interrupt-On-Change Registers

REGISTER 20-1: IOCA: INTERRUPT-ON-CHANGE PORTGPA REGISTER

R/W-0	R/W-0	R/W-0	U-0	R/W-0	R/W-0	R/W-0	R/W-0
IOCA7	IOCA6	IOCA5	—	IOCA3	IOCA2	IOCA1	IOCA0
bit 7							bit 0

Legend:		
R = Readable bit	W = Writable bit	U = Unimplemented bit, read as ‘0’
u = Bit is unchanged	x = Bit is unknown	-n = Value at POR
‘1’ = Bit is set	‘0’ = Bit is cleared	

bit 7-6 **IOCA<7:6>**: Interrupt-on-Change PORTGPA register bits
`1` = Interrupt-on-change enabled on the pin
`0` = Interrupt-on-change disabled on the pin

bit 5 **IOCA<5>**: Interrupt-on-Change PORTGPA register bit (1)
`1` = Interrupt-on-change enabled on the pin
`0` = Interrupt-on-change disabled on the pin

bit 4 **Unimplemented:** Read as ‘`0`’

bit 3-0 **IOCA<3:0>**: Interrupt-on-Change PORTGPA register bits
`1` = Interrupt-on-change enabled on the pin
`0` = Interrupt-on-change disabled on the pin

Note 1: The Interrupt-on-Change on GPA5 is disabled if GPA5 is configured as $\overline{\text{MCLR}}$.

REGISTER 20-2: IOCB: INTERRUPT-ON-CHANGE PORTGPB REGISTER

R/W-0	R/W-0	R/W-0	R/W-0	U-0	U-0	R/W-0	R/W-0
IOCB7 (1)	IOCB6 (1)	IOCB5 (1)	IOCB4 (1)	—	—	IOCB1	IOCB0
bit 7							bit 0

Legend:		
R = Readable bit	W = Writable bit	U = Unimplemented bit, read as ‘0’
u = Bit is unchanged	x = Bit is unknown	-n = Value at POR
‘1’ = Bit is set	‘0’ = Bit is cleared	

bit 7-4 **IOCB<7:4>**: Interrupt-on-Change PORTGPB register bits
`1` = Interrupt-on-change enabled on the pin
`0` = Interrupt-on-change disabled on the pin

bit 3-2 **Unimplemented:** Read as ‘`0`’

bit 1-0 **IOCB<1:0>**: Interrupt-on-Change PORTGPB register bits
`1` = Interrupt-on-change enabled on the pin
`0` = Interrupt-on-change disabled on the pin

Note 1: MCP19117 only.

© 2015-2018 Microchip Technology Inc.

TABLE 20-1: SUMMARY OF REGISTERS ASSOCIATED WITH INTERRUPT-ON-CHANGE

Name	Bit 7	Bit 6	Bit 5	Bit 4	Bit 3	Bit 2	Bit 1	Bit 0	Register on page
ANSELA	—	—	—	—	ANSA3	ANSA2	ANSA1	ANSA0	128
ANSELB	—	ANSB6 (1)	ANSB5 (1)	ANSB4 (1)	—	—	ANSB1	—	132
INTCON	GIE	PEIE	T0IE	INTE	IOCE	T0IF	INTF	IOCF	107
IOCA	IOCA7	IOCA6	IOCA5	—	IOCA3	IOCA2	IOCA1	IOCA0	134
IOCB	IOCB7 (1)	IOCB6 (1)	IOCB5 (1)	IOCB4 (1)	—	—	IOCB1	IOCB0	134
TRISGPA	TRISA7	TRISA6	TRISA5	—	TRISA3	TRISA2	TRISA1	TRISA0	127
TRISGPB	TRISB7 (1)	TRISB6 (1)	TRISB5 (1)	TRISB4 (1)	—	—	TRISB1	TRISB0	131

Legend: — = unimplemented locations, read as '0'. Shaded cells are not used by interrupt-on-change.

Note 1: MCP19117 only.

NOTES:

© 2015-2018 Microchip Technology Inc.

21.0 INTERNAL TEMPERATURE INDICATOR MODULE

The MCP19116/7 devices are equipped with a temperature circuit designed to measure the operating temperature of the silicon die. The circuit's range of operating temperature falls between –40°C and +125°C. The output is a voltage that is proportional to the device temperature. The output of the temperature indicator is internally connected to the device ADC.

21.1 Circuit Operation

This internal temperature measurement circuit is always enabled.

FIGURE 21-1: TEMPERATURE CIRCUIT DIAGRAM

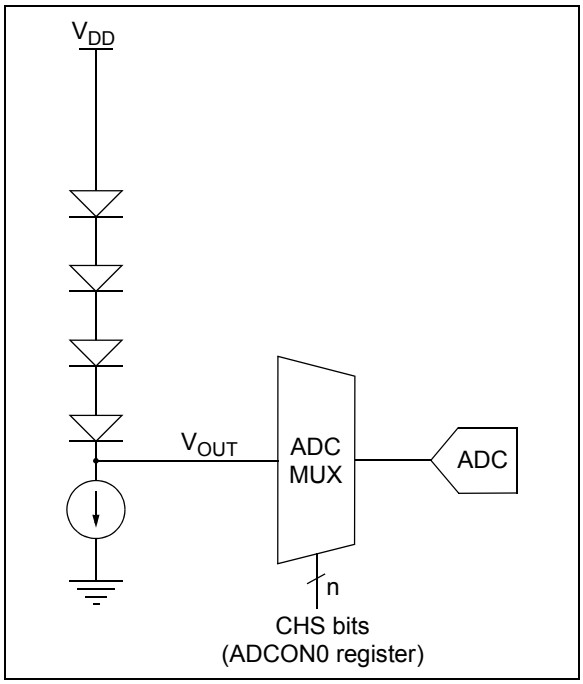

21.2 Temperature Output

The output of the circuit is measured using the internal analog-to-digital converter. Channel 13 is reserved for the temperature circuit output. Refer to **Section 22.0, Analog-to-Digital Converter (ADC) Module** for detailed information.

The temperature of the silicon die can be calculated by the ADC measurement by using Equation 21-1. A factory-stored 10-bit ADC value for 30°C is located at address 2084h. The temperature coefficient for this circuit is 14.0 mV/°C from –5°C to +125°C. Other temperature readings can be calculated from the 30°C mark.

Note:	ADC temperature numbers represented are with ADC_REF = AV_{DD}

EQUATION 21-1: SILICON DIE TEMPERATURE

$$TEMP_DIE(°C) = \frac{(ADC_READING\ (counts) - ADC_30\ °C_READING\ (counts))}{3.5\ (counts/°C)} + 30\ °C$$

NOTES:

© 2015-2018 Microchip Technology Inc.

22.0 ANALOG-TO-DIGITAL CONVERTER (ADC) MODULE

The Analog-to-Digital Converter (ADC) allows conversion of an analog input signal to a 10-bit binary representation of that signal. This device uses analog inputs that are multiplexed into a single sample-and-hold circuit. The output of the sample-and-hold is connected to the input of the converter. The converter generates a 10-bit binary result via successive approximation and stores the right-justified conversion result into the ADC result registers (ADRESH:ADRESL register pair). Figure 22-1 shows the block diagram of the ADC.

The internal band gap supplies the voltage reference to the ADC.

Note: Once V_{IN} is greater than $AV_{DD} + V_{DROPOUT}$, AV_{DD} is in regulation, allowing A/D readings to be accurate. Once V_{IN} is greater than $V_{DD} + V_{DROPOUT}$, V_{DD} is in regulation, allowing accurate ratiometric measurements.

FIGURE 22-1: ADC BLOCK DIAGRAM

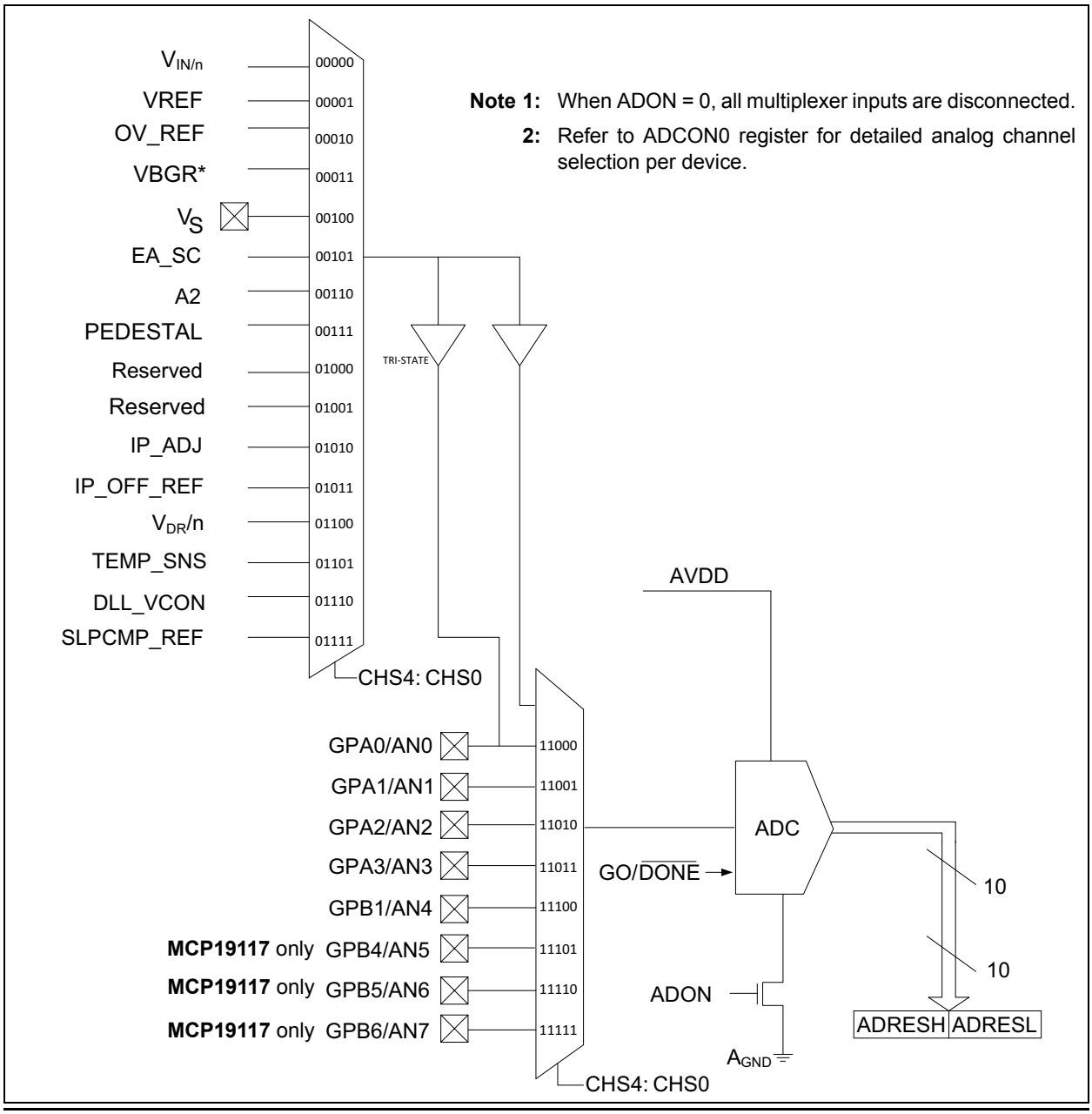

22.1 ADC Configuration

When configuring and using the ADC, the following functions must be considered:

- Port configuration
- Channel selection
- ADC conversion clock source
- Interrupt control
- Result formatting

22.1.1 PORT CONFIGURATION

The ADC is used to convert analog signals into a corresponding digital representation. When converting analog signals, the I/O pin should be configured for analog by setting the associated TRIS and ANSEL bits. Refer to **Section 19.0, I/O Ports** for more information.

Note:	Analog voltages on any pin that is defined as a digital input may cause the input buffer to conduct excess current.

22.1.2 CHANNEL SELECTION

There are up to 21 channel selections available for the MCP19116 and 24 channels for the MCP19117:

- AN<4:0> pins
- AN<7:5> pins (**MCP19117** only)
- V_{IN}: 1/15.53 of the input voltage (V_{IN})
- V_{REF}: voltage reference for regulation set point
- OV_REF: reference for OV comparator
- V_{BGR}: band gap reference
- V_S: voltage proportional to V_{OUT}
- EA_SC: error amplifier output after slope compensation
- A2: secondary current sense amplifier output
- Pedestal
- Reserved
- Reserved
- IP_ADJ: I_P after pedestal and offset adjust
- IP_OFF_REF: I_P offset reference
- V_{DR}: V_{DR} * 0.229V/V
- TEMP_SNS: analog voltage representing internal temperature (refer to Equation 21-1)
- DLL_VCON: delay locked loop voltage reference
- SLPCMP_REF: slope compensation reference

The CHS<4:0> bits in the ADCON0 register determine which channel is connected to the sample and hold circuit.

When changing channels, a delay is required before starting the next conversion. Refer to **Section 22.2 "ADC Operation"** for more information.

22.1.3 ADC CONVERSION CLOCK

The source of the conversion clock is software selectable via the ADCS bits in the ADCON1 register. There are five possible clock options:

- $F_{OSC}/8$
- $F_{OSC}/16$
- $F_{OSC}/32$
- $F_{OSC}/64$
- F_{RC} (clock derived from internal oscillator with a divisor of 16)

The time to complete one-bit conversion is defined as T_{AD}. One full 10-bit conversion requires 11 T_{AD} periods, as shown in Figure 22-2.

For a correct conversion, the appropriate T_{AD} specification must be met. Refer to the A/D conversion requirements in **Section 4.0 "Electrical Characteristics"** for more information. Table 22-1 gives examples of appropriate ADC clock selections.

Note:	Unless using the F_{RC}, any changes in the system clock frequency will change the ADC clock frequency, which may adversely affect the ADC result.

TABLE 22-1: ADC CLOCK PERIOD (T_{AD}) VS. DEVICE OPERATING FREQUENCIES

ADC Clock Period (T_{AD})		Device Frequency (F_{OSC})
ADC Clock Source	**ADCS<2:0>**	**8 MHz**
$F_{OSC}/8$	001	1.0 µs (1)
$F_{OSC}/16$	101	2.0 µs
$F_{OSC}/32$	010	4.0 µs
$F_{OSC}/64$	110	8.0 µs (2)
F_{RC}	x11	2.0 – 6.0 µs (3, 4)

Legend: Shaded cells are outside of recommended range.

Note 1: These values violate the minimum required T_{AD} time.

2: For faster conversion times, the selection of another clock source is recommended.

3: The F_{RC} source has a typical T_{AD} time of 4 µs for V_{DD} > 3.0V.

4: The F_{RC} clock source is only recommended if the conversion will be performed during Sleep.

© 2015-2018 Microchip Technology Inc.

FIGURE 22-2: ANALOG-TO-DIGITAL CONVERSION T_{AD} CYCLES

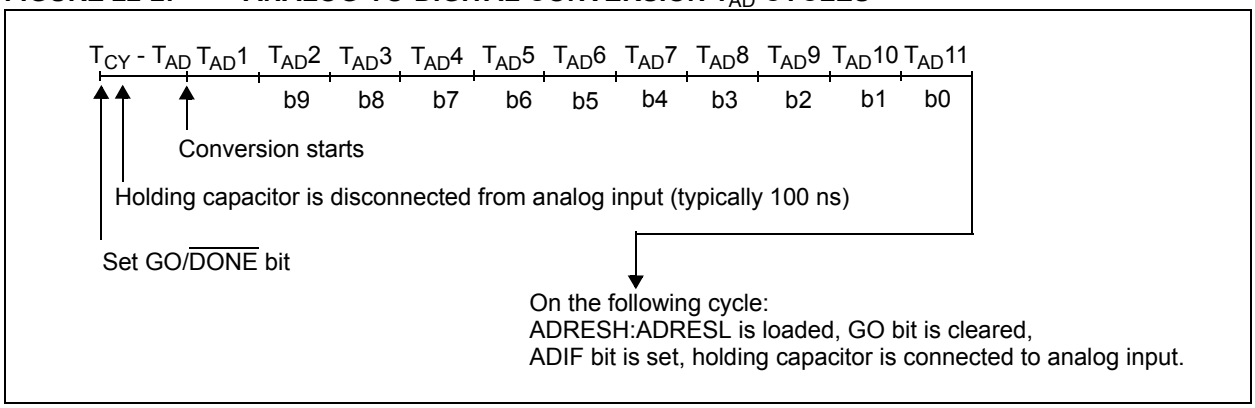

22.1.4 INTERRUPTS

The ADC module allows for the ability to generate an interrupt upon completion of an analog-to-digital conversion. The ADC Interrupt Flag is the ADIF bit in the PIR1 register. The ADC Interrupt Enable is the ADIE bit in the PIE1 register. The ADIF bit must be cleared in software.

Note 1:	The ADIF bit is set at the completion of every conversion, regardless of whether or not the ADC interrupt is enabled.

This interrupt can be generated while the device is operating or while in Sleep. If the device is in Sleep, the interrupt wakes the device up. Upon waking from Sleep, the next instruction following the SLEEP instruction is always executed. If the user is attempting to wake up from Sleep and resume in-line code execution, the GIE and PEIE bits in the INTCON register must be disabled. If the GIE and PEIE bits in the INTCON register are enabled, execution will switch to the Interrupt Service Routine.

22.1.5 RESULT FORMATTING

The 10-bit A/D conversion result is supplied in right-justified format only.

Figure 22-3 shows the output format.

FIGURE 22-3: 10-BIT A/D RESULT FORMAT

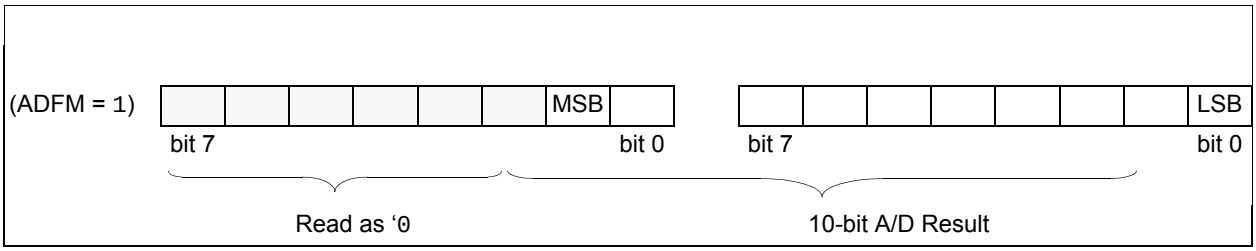

22.2 ADC Operation

22.2.1 ADC REFERENCE SWITCH

Users have the option of connecting the 5V LDO (V_{DD}) or the 4.096V LDO (AV_{DD}) as the reference to the Analog-to-Digital Converter. This control bit (VCFG) is located in the ADCON1 register bit 0 (see Register 22-2). Default configuration connects the AV_{DD} to the ADC reference.

22.2.2 STARTING A CONVERSION

To enable the ADC module, the ADON bit in the ADCON0 register must be set to a '1'. Setting the GO/$\overline{\text{DONE}}$ bit in the ADCON0 register to a '1' starts the analog-to-digital conversion.

Note:	The GO/$\overline{\text{DONE}}$ bit should not be set in the same instruction that turns on the ADC. Refer to **Section 22.2.6 "A/D Conversion Procedure"**.

22.2.3 COMPLETION OF A CONVERSION

When the conversion is complete, the ADC module:

- Clears the GO/$\overline{\text{DONE}}$ bit
- Sets the ADIF Interrupt Flag bit
- Updates the ADRESH:ADRESL registers with new conversion result

22.2.4 TERMINATING A CONVERSION

If a conversion must be terminated before completion, the GO/$\overline{\text{DONE}}$ bit can be cleared in software. The ADRESH:ADRESL registers are not updated with the partially complete analog-to-digital conversion sample. Instead, the ADRESH:ADRESL register pair retains the value of the previous conversion. Additionally, two ADC clock cycles are required before another acquisition can be initiated. Following the delay, an input acquisition is automatically started on the selected channel.

Note:	A device reset forces all registers to their Reset state. Thus, the ADC module is turned off and any pending conversion is terminated.

22.2.5 ADC OPERATION DURING SLEEP

The ADC is not operational during Sleep mode. The AV_{DD} 4V reference has been removed to minimize Sleep current.

22.2.6 A/D CONVERSION PROCEDURE

This is an example procedure for using the ADC to perform an analog-to-digital conversion:

1. Configure Port:
   - Disable pin output driver (refer to the TRISGPx registers)
   - Configure pin as analog (refer to the ANSELx registers)
2. Configure the ADC module:
   - Select ADC conversion clock
   - Select ADC input channel
   - Turn on ADC module
3. Configure ADC interrupt (optional):
   - Clear ADC interrupt flag
   - Enable ADC interrupt
   - Enable peripheral interrupt
   - Enable global interrupt (1)
4. Wait the required acquisition time (2).
5. Start conversion by setting the GO/$\overline{\text{DONE}}$ bit.
6. Wait for ADC conversion to complete by one of the following:
   - Polling the GO/$\overline{\text{DONE}}$ bit
   - Waiting for the ADC interrupt (interrupts enabled)
7. Read ADC Result.
8. Clear the ADC interrupt flag (required if interrupt is enabled).

Note 1:	The global interrupt can be disabled if the user is attempting to wake up from Sleep and resume in-line code execution.
2:	Refer to **Section 22.4 "A/D Acquisition Requirements"**.

EXAMPLE 22-1: A/D CONVERSION

```
;This code block configures the ADC
;for polling, Frc clock and AN0 input.
;
;Conversion start & polling for completion ;
are included.
;
BANKSELADCON1;
MOVLWB'01110000';Frc clock
MOVWFADCON1;
BANKSELTRISGPA;
BSF TRISGPA,0;Set GPA0 to input
BANKSELANSELA;
BSF ANSELA,0;Set GPA0 to analog
BANKSELADCON0;
MOVLWB'01100001';Select channel AN0
MOVWFADCON0;Turn ADC On
CALLSampleTime;Acquisiton delay
BSF ADCON0,1;Start conversion
BTFSCADCON0,1;Is conversion done?
GOTO$-1 ;No, test again
BANKSELADRESH;
MOVFADRESH,W;Read upper 2 bits
MOVWFRESULTHI;store in GPR space
BANKSELADRESL;
MOVFADRESL,W;Read lower 8 bits
MOVWFRESULTLO;Store in GPR space
```


© 2015-2018 Microchip Technology Inc.

22.3 ADC Register Definitions

The following registers are used to control the operation of the ADC:

REGISTER 22-1: ADCON0: A/D CONTROL REGISTER 0

U-0	R/W-0	R/W-0	R/W-0	R/W-0	R/W-0	R/W-0	R/W-0
—	CHS4	CHS3	CHS2	CHS1	CHS0	GO/$\overline{\text{DONE}}$	ADON
bit 7							bit 0

Legend:		
R = Readable bit	W = Writable bit	U = Unimplemented bit, read as ‘0’
u = Bit is unchanged	x = Bit is unknown	-n = Value at POR
‘1’ = Bit is set	‘0’ = Bit is cleared	

bit 7 **Unimplemented:** Read as ‘0’

bit 6-2 **CHS<4:0>:** Analog Channel Select bits

00000 = $V_{IN/n}$ analog voltage measurement ($V_{IN/n} = V_{IN}/15.5328$)
00001 = VREF (DAC reference voltage setting current regulation level)
00010 = OV_REF (reference for overvoltage comparator)
00011 = VBGR (band gap reference)
00100 = V_S (Voltage proportional to V_{OUT})
00101 = EA_SC (Error Amplifier after Slope Compensation output)
00110 = A2 (Secondary Current Sense Amplifier output)
00111 = Pedestal (Pedestal Voltage)
01000 = Reserved
01001 = Reserved
01010 = IP_ADJ (IP after Pedestal and Offset Adjust (at PWM Comparator))
01011 = IP_OFF_REF (IP Offset Reference)
01100 = V_{DR}/n (V_{DR}/n analog driver voltage measurement = 0.229V/V * V_{DR})
01101 = TEMP_SNS (analog voltage representing internal temperature)
01110 = DLL_VCON (Delay Locked-Loop Voltage Reference – Control voltage for dead time)
01111 = SLPCMP_REF (Slope compensation reference)
10000 = Unimplemented
10001 = Unimplemented
10010 = Unimplemented
10011 = Unimplemented
10100 = Unimplemented
10101 = Unimplemented
10110 = Unimplemented
10111 = Unimplemented
11000 = GPA0/AN0
11001 = GPA1/AN1
11010 = GPA2/AN2
11011 = GPA3/AN3
11100 = GPB1/AN4
11101 = GPB4/AN5 (**MCP19117** only)
11110 = GPB5/AN6 (**MCP19117** only)
11111 = GPB6/AN7 (**MCP19117** only)

bit 1 **GO/$\overline{\text{DONE}}$:** A/D Conversion Status bit

1 = A/D conversion cycle in progress. Setting this bit starts an A/D conversion cycle
This bit is automatically cleared by hardware when the A/D conversion has completed
0 = A/D conversion completed/not in progress

bit 0 **ADON:** ADC Enable bit

1 = ADC is enabled
0 = ADC is disabled and consumes no operating current

REGISTER 22-2: ADCON1: A/D CONTROL REGISTER 1

U-0	R/W-0	R/W-0	R/W-0	U-0	U-0	U-0	R/W-0
—	ADCS2	ADCS1	ADCS0	—	—	—	VCFG
bit 7							bit 0

Legend:		
R = Readable bit	W = Writable bit	U = Unimplemented bit, read as ‘0’
u = Bit is unchanged	x = Bit is unknown	-n = Value at POR
‘1’ = Bit is set	‘0’ = Bit is cleared	

bit 7 **Unimplemented:** Read as ‘0’

bit 6-4 **ADCS<2:0>:** A/D Conversion Clock Select bits
000 = Reserved
001 = $F_{OSC}/8$
010 = $F_{OSC}/32$
x11 = F_{RC} (clock derived from internal oscillator with a divisor of 16)
100 = Reserved
101 = $F_{OSC}/16$
110 = $F_{OSC}/64$

bit 3-1 **Unimplemented:** Read as ‘0’

bit 0 **VCFG:** ADC Reference Voltage Configuration
0 = AV_{DD}
1 = V_{DD}

REGISTER 22-3: ADRESH: ADC RESULT REGISTER HIGH

U-0	U-0	U-0	U-0	U-0	U-0	R-x	R-x
—	—	—	—	—	—	ADRES9	ADRES8
bit 7							bit 0

Legend:		
R = Readable bit	W = Writable bit	U = Unimplemented bit, read as ‘0’
u = Bit is unchanged	x = Bit is unknown	-n = Value at POR
‘1’ = Bit is set	‘0’ = Bit is cleared	

bit 7-2 **Unimplemented:** Read as ‘0’

bit 1-0 **ADRES<9:8>**: Most Significant A/D Results

REGISTER 22-4: ADRESL: ADC RESULT REGISTER LOW

R-x	R-x	R-x	R-x	R-x	R-x	R-x	R-x
ADRES7	ADRES6	ADRES5	ADRES4	ADRES3	ADRES2	ADRES1	ADRES0
bit 7							bit 0

Legend:		
R = Readable bit	W = Writable bit	U = Unimplemented bit, read as ‘0’
u = Bit is unchanged	x = Bit is unknown	-n = Value at POR
‘1’ = Bit is set	‘0’ = Bit is cleared	

bit 7-0 **ADRES<7:0>**: Least Significant A/D results

© 2015-2018 Microchip Technology Inc.

22.4 A/D Acquisition Requirements

For the ADC to meet its specified accuracy, the charge holding capacitor (C_{HOLD}) must be allowed to fully charge to the input channel voltage level. The Analog Input model is shown in Figure 22-4. The source impedance (R_S) and the internal sampling switch (R_{SS}) impedance directly affect the time required to charge the capacitor C_{HOLD}. The sampling switch (R_{SS}) impedance varies over the device voltage (V_{DD}), refer to Figure 22-4. **The maximum recommended impedance for analog sources is 10 kΩ.**

As the source impedance is decreased, the acquisition time may be decreased. After the analog input channel is selected (or changed), an A/D acquisition must be done before the conversion can be started. To calculate the minimum acquisition time, Equation 22-1 may be used. This equation assumes that 1/2 LSb error is used (1,024 steps for the ADC). The 1/2 LSb error is the maximum error allowed for the ADC to meet its specified resolution.

EQUATION 22-1: ACQUISITION TIME EXAMPLE

Assumptions: *Temperature = +50°C and external impedance of 10 kΩ 5.0V* V_{DD}

$$T_{ACQ} = \text{Amplifier Settling Time} + \text{Hold Capacitor Charging Time} + \text{Temperature Coefficient}$$
$$= T_{AMP} + T_C + T_{COFF}$$
$$= 2\ \mu s + T_C + [(\text{Temperature} - 25°C)(0.05\ \mu s/°C)]$$

The value for T_C *can be approximated with the following equations:*

$$V_{APPLIED}\left(1 - \frac{1}{(2^{n+1}) - 1}\right) = V_{CHOLD}$$;[1] V_{CHOLD} charged to within 1/2 lsb

$$V_{APPLIED}\left(1 - e^{\frac{-T_C}{RC}}\right) = V_{CHOLD}$$;[2] V_{CHOLD} charge response to $V_{APPLIED}$

$$V_{APPLIED}\left(1 - e^{\frac{-T_C}{RC}}\right) = V_{APPLIED}\left(1 - \frac{1}{(2^{n+1}) - 1}\right)$$;combining [1] and [2]

Note: *Where n = number of bits of the ADC.*

Solving for T_C*:*

$$T_C = -C_{HOLD}(R_{IC} + R_{SS} + R_S)\ \ln(1/2047)$$
$$= -10\ pF(1\ k\Omega + 7\ k\Omega + 10\ k\Omega)\ \ln(0.0004885)$$
$$= 1.37\mu s$$

Therefore:

$$T_{ACQ} = 2\ \mu s + 1.37\mu s + [(50°C - 25°C)(0.05\mu s/°C)]$$
$$= 4.67\ \mu s$$

Note 1: The charge holding capacitor (C_{HOLD}) is not discharged after each conversion.

2: The maximum recommended impedance for analog sources is 10 kΩ. This is required to meet the pin leakage specification.

FIGURE 22-4: ANALOG INPUT MODEL

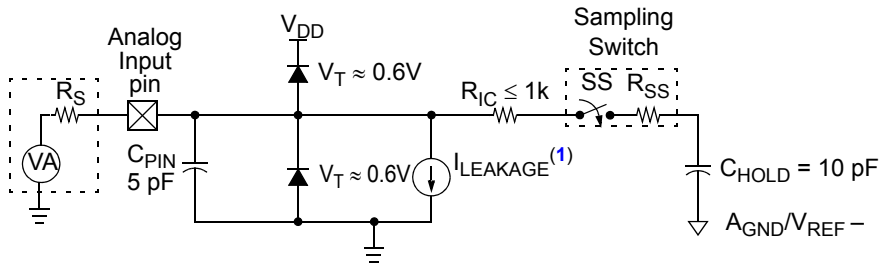

Legend:

C_{HOLD}	=	Sample/Hold Capacitance
C_{PIN}	=	Input Capacitance
$I_{LEAKAGE}$	=	Leakage current at the pin due to various junctions
R_{IC}	=	Interconnect Resistance
R_{SS}	=	Resistance of Sampling Switch
SS	=	Sampling Switch
V_T	=	Threshold Voltage

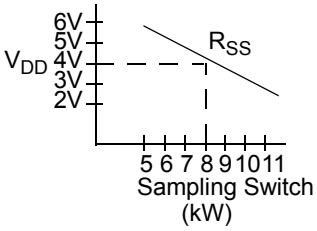

Note 1: Refer to **Section 4.0 "Electrical Characteristics"**.

FIGURE 22-5: ADC TRANSFER FUNCTION

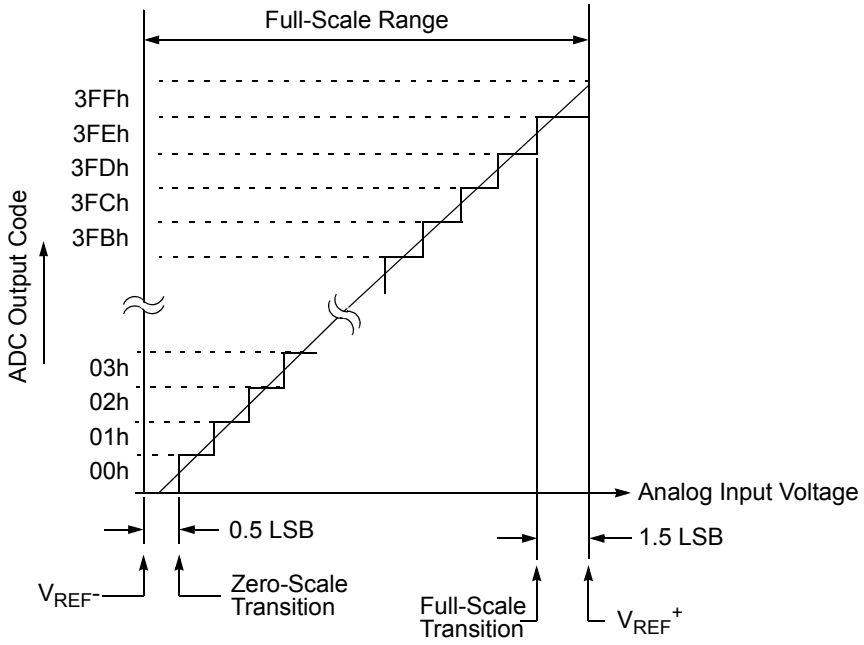

© 2015-2018 Microchip Technology Inc.

TABLE 22-2: SUMMARY OF REGISTERS ASSOCIATED WITH ADC

Name	Bit 7	Bit 6	Bit 5	Bit 4	Bit 3	Bit 2	Bit 1	Bit 0	Register on page
ADCON0	—	CHS4	CHS3	CHS2	CHS1	CHS0	GO/$\overline{\text{DONE}}$	ADON	143
ADCON1	—	ADCS2	ADCS1	ADCS0	—	—	—	—	144
ADRESH	—	—	—	—	—	—	ADRES9	ADRES8	144
ADRESL	ADRES7	ADRES6	ADRES5	ADRES4	ADRES3	ADRES2	ADRES1	ADRES0	144
ANSELA	—	—	—	—	ANSA3	ANSA2	ANSA1	ANSA0	128
ANSELB	—	ANSB6	ANSB5	ANSB4	—	—	ANSB1	—	132
INTCON	GIE	PEIE	T0IE	INTE	IOCE	T0IF	INTF	IOCF	107
PIE2	CDSIE	ADIE	—	OTIE	OVIE	DRUVIE	OVLOIE	UVLOIE	109
PIR2	CDSIF	ADIF	—	OTIF	OVIF	DRUVIF	OVLOIF	UVLOIF	111
TRISGPA	TRISA7	TRISA6	TRISA5	—	TRISA3	TRISA2	TRISA1	TRISA0	127
TRISGPB	TRISB7	TRISB6	TRISB5	TRISB4	—	—	TRISB1	TRISB0	131

Legend: — = unimplemented, read as '0'. Shaded cells are not used for ADC module.

NOTES:

© 2015-2018 Microchip Technology Inc.

23.0 TIMER0 MODULE

The Timer0 module is an 8-bit timer/counter with the following features:

- 8-bit timer/counter register (TMR0)
- 8-bit prescaler
- Programmable internal or external clock source
- Programmable external clock edge selection
- Interrupt on overflow

Figure 23-1 is a block diagram of the Timer0 module.

FIGURE 23-1: TIMER0 BLOCK DIAGRAM

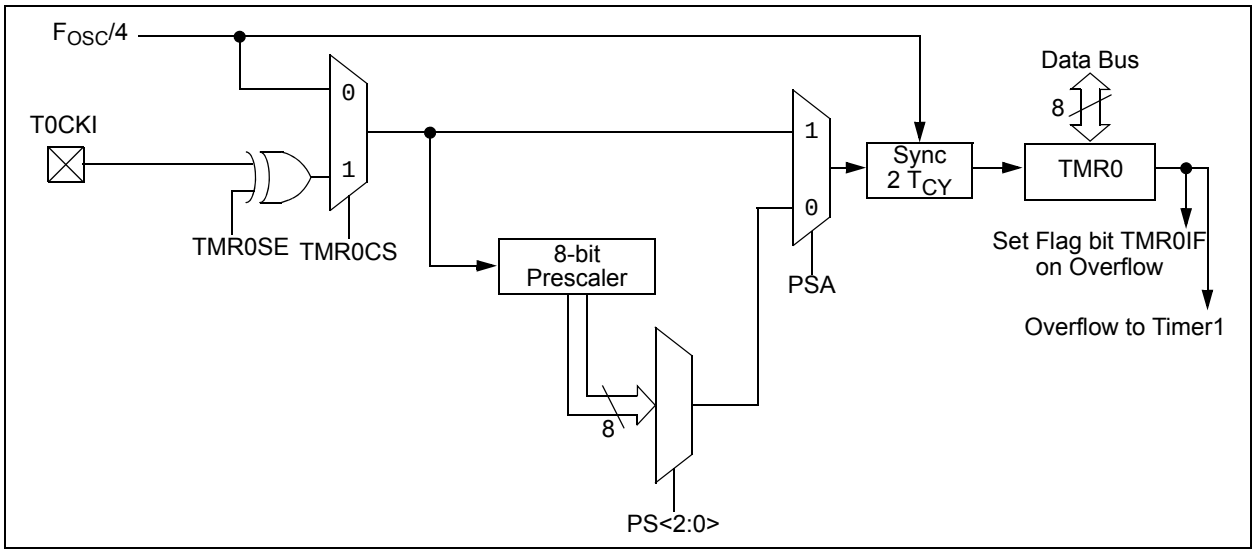

23.1 Timer0 Operation

The Timer0 module can be used as either an 8-bit timer or an 8-bit counter.

23.1.1 8-BIT TIMER MODE

The Timer0 module will increment every instruction cycle, if used without a prescaler. 8-Bit Timer mode is selected by clearing the T0CS bit in the OPTION_REG register.

When TMR0 is written, the increment is inhibited for two instruction cycles immediately following the write.

Note:	The value written to the TMR0 register can be adjusted, in order to account for the two-instruction cycle delay when TMR0 is written.

23.1.2 8-BIT COUNTER MODE

In 8-Bit Counter mode, the Timer0 module increments on every rising or falling edge of the T0CKI pin. The incrementing edge is determined by the T0SE bit in the OPTION_REG register.

8-Bit Counter mode using the T0CKI pin is selected by setting the T0CS bit in the OPTION_REG register to ‘1’.

23.1.3 SOFTWARE PROGRAMMABLE PRESCALER

A single software programmable prescaler is available for use with either Timer0 or the Watchdog Timer (WDT), but not both simultaneously. The prescaler assignment is controlled by the PSA bit in the OPTION_REG register. To assign the prescaler to Timer0, the PSA bit must be cleared to ‘0’.

There are eight prescaler options for the Timer0 module ranging from 1:2 to 1:256. The prescale values are selectable via the PS<2:0> bits in the OPTION_REG register. In order to have a 1:1 prescaler value for the Timer0 module, the prescaler must be disabled by setting the PSA bit in the OPTION_REG register.

The prescaler is not readable or writable. When assigned to the Timer0 module, all instructions writing to the TMR0 register will clear the prescaler.

23.1.4 SWITCHING PRESCALER BETWEEN TIMER0 AND WDT MODULES

As a result of having the prescaler assigned to either Timer0 or the WDT, it is possible to generate an unintended device reset when switching prescaler values. When changing the prescaler assignment from Timer0 to the WDT module, the instruction sequence shown in Example 23-1 must be executed.

EXAMPLE 23-1: CHANGING PRESCALER (TIMER0 → WDT)

```
BANKSELTMR0;
CLRWDT  ;Clear WDT
CLRFTMR0;Clear TMR0 and
        ;prescaler
BANKSELOPTION_REG;
BSF OPTION_REG,PSA;Select WDT
CLRWDT  ;
        ;
MOVLWb'11111000';Mask prescaler
ANDWFOPTION_REG,W;bits
IORLWb'00000101';Set WDT prescaler
MOVWFOPTION_REG;to 1:32
```

When changing the prescaler assignment from the WDT to the Timer0 module, the following instruction sequence must be executed (refer to Example 23-2).

EXAMPLE 23-2: CHANGING PRESCALER (WDT → TIMER0)

```
CLRWDT  ;Clear WDT and
        ;prescaler
BANKSELOPTION_REG;
MOVLWb'11110000';Mask TMR0 select and
ANDWFOPTION_REG,W;prescaler bits
IORLWb'00000011';Set prescale to 1:16
MOVWFOPTION_REG;
```

23.1.5 TIMER0 INTERRUPT

Timer0 will generate an interrupt when the TMR0 register overflows from FFh to 00h. The T0IF interrupt flag bit in the INTCON register is set every time the TMR0 register overflows, regardless of whether or not the Timer0 interrupt is enabled. The T0IF bit can only be cleared in software. The Timer0 interrupt enable is the T0IE bit in the INTCON register.

Note:	The Timer0 interrupt cannot wake the processor from Sleep since the timer is frozen during Sleep.

23.1.6 USING TIMER0 WITH AN EXTERNAL CLOCK

When Timer0 is in Counter mode, the synchronization of the T0CKI input and the Timer0 register is accomplished by sampling the prescaler output on the Q2 and Q4 cycles of the internal phase clocks. Therefore, the high and low periods of the external clock source must meet the timing requirements as shown in **Section 4.0 "Electrical Characteristics"**.

23.1.7 OPERATION DURING SLEEP

Timer0 cannot operate while the processor is in Sleep mode. The contents of the TMR0 register will remain unchanged while the processor is in Sleep mode.

TABLE 23-1: SUMMARY OF REGISTERS ASSOCIATED WITH TIMER0

Name	Bit 7	Bit 6	Bit 5	Bit 4	Bit 3	Bit 2	Bit 1	Bit 0	Register on page
INTCON	GIE	PEIE	T0IE	INTE	IOCIE	T0IF	INTF	IOCIF	107
OPTION_REG	$\overline{\text{RAPU}}$	INTEDG	T0CS	T0SE	PSA	PS2	PS1	PS0	90
TMR0	Timer0 Module Register								149*
TRISGPA	TRISA7	TRISA6	TRISA5	TRISA4	TRISA3	TRISA2	TRISA1	TRISA0	127

Legend: — = Unimplemented locations, read as '0'. Shaded cells are not used by the Timer0 module.

* Page provides register information.

© 2015-2018 Microchip Technology Inc.

24.0 TIMER1 MODULE

The Timer1 module is a 16-bit timer with the following features:

- 16-bit timer register pair (TMR1H:TMR1L)
- Readable and writable (both registers)
- Selectable internal clock source
- 2-bit prescaler
- Interrupt on overflow

Figure 24-1 is a block diagram of the Timer1 module.

FIGURE 24-1: TIMER1 BLOCK DIAGRAM

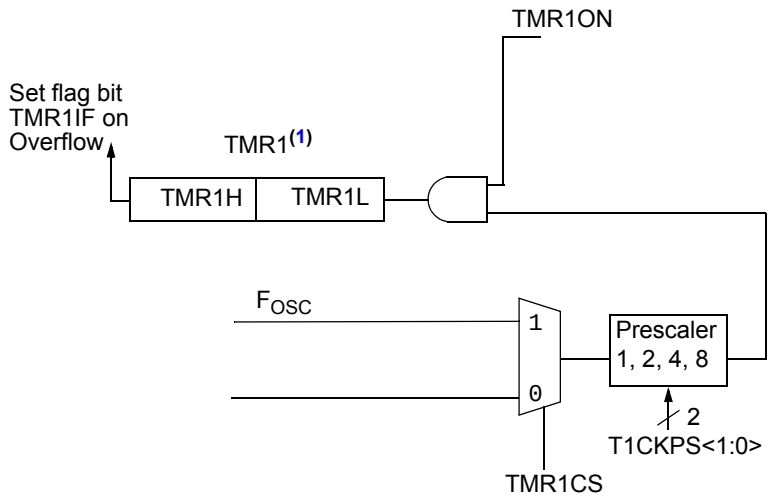

Note 1: TMR1 register increments on rising edge.

24.1 Timer1 Operation

The Timer1 module is a 16-bit incrementing timer which is accessed through the TMR1H:TMR1L register pair. Writes to TMR1H or TMR1L directly update the counter. The timer is incremented on every instruction cycle.

Timer1 is enabled by configuring the TMR1ON bit in the T1CON register. Table 24-1 displays the Timer1 enable selections.

24.2 Clock Source Selection

The TMR1CS bit in the T1CON register is used to select the clock source for Timer1. Table 24-1 displays the clock source selections.

24.2.1 INTERNAL CLOCK SOURCE

The TMR1H:TMR1L register pair will increment on multiples of F_{OSC} or $F_{OSC}/4$ as determined by the Timer1 prescaler.

As an example, when the F_{OSC} internal clock source is selected, the Timer1 register value will increment by four counts every instruction clock cycle.

TABLE 24-1: CLOCK SOURCE SELECTIONS

TMR1CS	Clock Source
1	8 MHz system clock (F_{OSC})
0	2 MHz instruction clock ($F_{OSC}/4$)

24.3 Timer1 Prescaler

Timer1 has four prescaler options, allowing 1, 2, 4 or 8 divisions of the clock input. The T1CKPS bits in the T1CON register control the prescale counter. The prescale counter is not directly readable or writable; however, the prescaler counter is cleared upon a write to TMR1H or TMR1L.

24.4 Timer1 Interrupt

The Timer1 register pair (TMR1H:TMR1L) increments to FFFFh and rolls over to 0000h. When Timer1 rolls over, the Timer1 interrupt flag bit in the PIR1 register is set. To enable the interrupt on rollover, these bits must be set:

- TMR1ON bit in the T1CON register
- TMR1IE bit in the PIE1 register
- PEIE bit in the INTCON register
- GIE bit in the INTCON register

The interrupt is cleared by clearing the TMR1IF bit in the Interrupt Service Routine.

Note:	The TMR1H:TMR1L register pair and the TMR1IF bit should be cleared before enabling interrupts.

24.5 Timer1 in Sleep

Unlike other standard mid-range Timer1 modules, the MCP19116/7 Timer1 module only clocks from an internal system clock, and thus cannot run during Sleep mode, nor can it be used to wake the device from this mode.

24.6 Timer1 Control Register

The Timer1 Control (T1CON) register, shown in Register 24-1, is used to control Timer1 and select the various features of the Timer1 module.

REGISTER 24-1: T1CON: TIMER1 CONTROL REGISTER

U-0	U-0	R/W-0	R/W-0	U-0	U-0	R/W-0/	R/W-0
—	—	T1CKPS1	T1CKPS0	—	—	TMR1CS	TMR1ON
bit 7							bit 0

Legend:		
R = Readable bit	W = Writable bit	U = Unimplemented bit, read as ‘0’
u = Bit is unchanged	x = Bit is unknown	-n = Value at POR
‘1’ = Bit is set	‘0’ = Bit is cleared	

bit 7-6 **Unimplemented:** Read as ‘0’

bit 5-4 **T1CKPS<1:0>:** Timer1 Input Clock Prescale Select bits
- 11 = 1:8 Prescale value
- 10 = 1:4 Prescale value
- 01 = 1:2 Prescale value
- 00 = 1:1 Prescale value

bit 3-2 **Unimplemented:** Read as ‘0’

bit 1 **TMR1CS:** Timer1 Clock Source Control bit
- 1 = 8 MHz system clock (F_{OSC})
- 0 = 2 MHz instruction clock ($F_{OSC/4}$)

bit 0 **TMR1ON:** Timer1 On bit
- 1 = Enables Timer1
- 0 = Stops Timer1, Clears Timer1 gate flip-flop

© 2015-2018 Microchip Technology Inc.

TABLE 24-2: SUMMARY OF REGISTERS ASSOCIATED WITH TIMER1

Name	Bit 7	Bit 6	Bit 5	Bit 4	Bit 3	Bit 2	Bit 1	Bit 0	Register on page
INTCON	GIE	PEIE	T0IE	INTE	IOCE	T0IF	INTF	IOCF	107
PIE1	TXIE	RCIE	BCLIE	SSPIE	CC2IE	CC1IE	TMR2IE	TMR1IE	108
PIR1	TXIF	RCIF	BCLIF	SSPIF	CC2IF	CC1IF	TMR2IF	TMR1IF	110
TMR1H	Holding Register for the Most Significant Byte of the 16-bit TMR1 Register								151*
TMR1L	Holding Register for the Least Significant Byte of the 16-bit TMR1 Register								151*
T1CON	—	—	T1CKPS1	T1CKPS0	—	—	TMR1CS	TMR1ON	152

Legend: — = unimplemented, read as '0'. Shaded cells are not used by the Timer1 module.

* Page provides register information.

NOTES:

© 2015-2018 Microchip Technology Inc.

25.0 TIMER2 MODULE

The Timer2 module is an 8-bit timer with the following features:

- 8-bit timer register (TMR2)
- 8-bit period register (PR2)
- Interrupt on TMR2 match with PR2
- Software programmable prescaler (1:1, 1:4, 1:16)

Refer to Figure 25-1 for a block diagram of Timer2.

25.1 Timer2 Operation

The clock input to the Timer2 module is the system clock (F_{OSC}). The clock is fed into the Timer2 prescaler, which has prescale options of 1:1, 1:4 or 1:16. The output of the prescaler is then used to increment the TMR2 register.

The values of TMR2 and PR2 are constantly compared to determine when they match. TMR2 increments from 00h until it matches the value in PR2. When a match occurs, TMR2 is reset to 00h on the next increment cycle.

The match output of the Timer2/PR2 comparator is used to set the TMR2IF interrupt flag bit in the PIR1 register.

The TMR2 and PR2 registers are both fully readable and writable. On any Reset, the TMR2 register is set to 00h and the PR2 register is set to FFh.

Timer2 is turned on by setting the TMR2ON bit in the T2CON register to a '1'. Timer2 is turned off by clearing the TMR2ON bit to a '0'.

The Timer2 prescaler is controlled by the T2CKPS bits in the T2CON register. The prescaler counter is cleared when:

- A write to TMR2 occurs
- A write to T2CON occurs
- Any device reset occurs (Power-on Reset, $\overline{\text{MCLR}}$ Reset, Watchdog Timer Reset or Brown-out Reset)

Note:	TMR2 is not cleared when T2CON is written.

FIGURE 25-1: TIMER2 BLOCK DIAGRAM

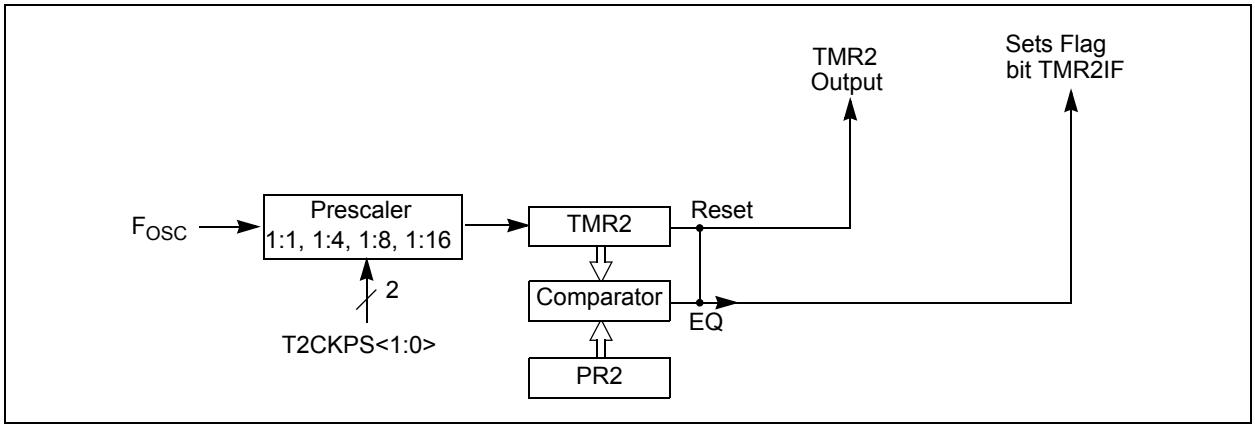

25.2 Timer2 Control Register

REGISTER 25-1: T2CON: TIMER2 CONTROL REGISTER

U-0	U-0	U-0	U-0	U-0	R/W-0	R/W-0	R/W-0
—	—	—	—	—	TMR2ON	T2CKPS1	T2CKPS0
bit 7							bit 0

Legend:		
R = Readable bit	W = Writable bit	U = Unimplemented bit, read as ‘0’
u = Bit is unchanged	x = Bit is unknown	-n = Value at POR
‘1’ = Bit is set	‘0’ = Bit is cleared	

bit 7-3 **Unimplemented:** Read as ‘0’

bit 2 **TMR2ON:** Timer2 On bit
1 = Timer2 is ON
0 = Timer2 is OFF

bit 1-0 **T2CKPS<1:0>:** Timer2 Clock Prescale Select bits
00 = Prescaler is 1
01 = Prescaler is 4
10 = Prescaler is 8
11 = Prescaler is 16

TABLE 25-1: SUMMARY OF REGISTERS ASSOCIATED WITH TIMER2

Name	Bit 7	Bit 6	Bit 5	Bit 4	Bit 3	Bit 2	Bit 1	Bit 0	Register on page
INTCON	GIE	PEIE	T0IE	INTE	IOCE	T0IF	INTF	IOCF	107
PIE1	TXIE	RCIE	BCLIE	SSPIE	CC2IE	CC1IE	TMR2IE	TMR1IE	108
PIR1	TXIF	RCIF	BCLIF	SSPIF	CC2IF	CC1IF	TMR2IF	TMR1IF	110
PR2	Timer2 Module Period Register								155*
T2CON	—	—	—	—	—	TMR2ON	T2CKPS1	T2CKPS0	156
TMR2	Holding Register for the 8-bit TMR2 Time Base								155*

Legend: — = unimplemented, read as ‘0’. Shaded cells are not used for Timer2 module.
* Page provides register information.

© 2015-2018 Microchip Technology Inc.

26.0 ENHANCED PWM MODULE

The PWM module implemented on the MCP19116/7 is a scaled-down version of the Capture/Compare/PWM (CCP) module found in standard mid-range microcontrollers. The module only features the PWM module, which is slightly modified from standard mid-range microcontrollers. In the MCP19116/7, the PWM module is used to generate the system clock or system oscillator. This system clock can control the MCP19116/7 switching frequency, as well as set the maximum allowable duty cycle. The PWM module does not continuously adjust the duty cycle to control the output voltage. This is accomplished by the analog control loop and associated circuitry.

26.1 Standard Pulse-Width Modulation Mode

The CCP will only function in PWM mode. The PWM signal is used to set the operating frequency and maximum allowable duty cycle of the MCP19116/7. Figure 26-1 is a snippet of the MCP19116/7 block diagram showing the PWM signal from the CCP module.

FIGURE 26-1: MCP19116/7 SNIPPET SHOWING SYSTEM CLOCK FROM PWM MODULE

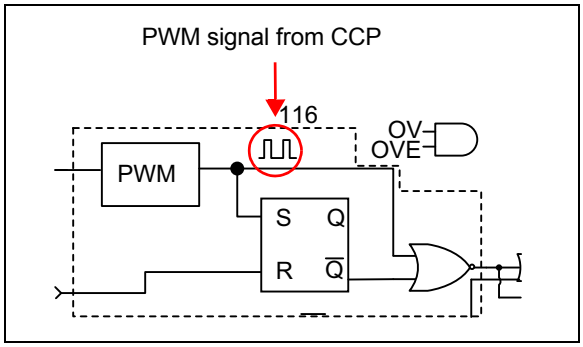

There are two modes of operation that concern the system clock PWM signal. These modes are Stand-Alone (non-frequency synchronization) and Frequency Synchronization.

26.1.1 STAND-ALONE (NON-FREQUENCY SYNCHRONIZATION) MODE

When the MCP19116/7 is running stand-alone, the PWM signal functions as the system clock. It is operating at the programmed switching frequency with a programmed maximum duty cycle (D_{CLOCK}). The programmed maximum duty cycle is not adjusted on a cycle-by-cycle basis to control the MCP19116/7 system output. The required duty cycle (D_{PDRVON}) to control the output is adjusted by the MCP19116/7 analog control loop and associated circuitry. D_{CLOCK} does however set the maximum allowable D_{PDRVON}.

EQUATION 26-1:

$$D_{BUCK} < 1 - D_{CLOCK}$$

26.1.2 SWITCHING FREQUENCY SYNCHRONIZATION MODE

The MCP19116/7 can be programmed to be switching frequency MASTER or SLAVE devices. The MASTER device functions as described in **Section 26.1.1 "Stand-Alone (Non-Frequency Synchronization) Mode"** with the exception of the system clock also being applied to GPA1.

A SLAVE device will receive the MASTER system clock on GPA1. This MASTER system clock will be OR'ed with the output of the TIMER2 module. This OR'ed signal will latch PWMRL into PWMRH and PWMPHL into PWMPHH.

Figure 26-2 shows a simplified block diagram of the CCP module in PWM mode.

The PWMPHL register allows for a phase shift to be added to the SLAVE system clock.

It is desired to have the MCP19116/7 SLAVE device's system clock start point shifted by a programmed amount from the MASTER system clock. This SLAVE phase shift is specified by writing to the PWMPHL register. The SLAVE phase shift can be calculated by using the following equation.

EQUATION 26-2:

$$SLAVE_{PHASE\ SHIFT} = PWMPHL \times T_{OSC} \times (T2_{PRESCALE\ VALUE})$$

FIGURE 26-2: SIMPLIFIED PWM BLOCK DIAGRAM

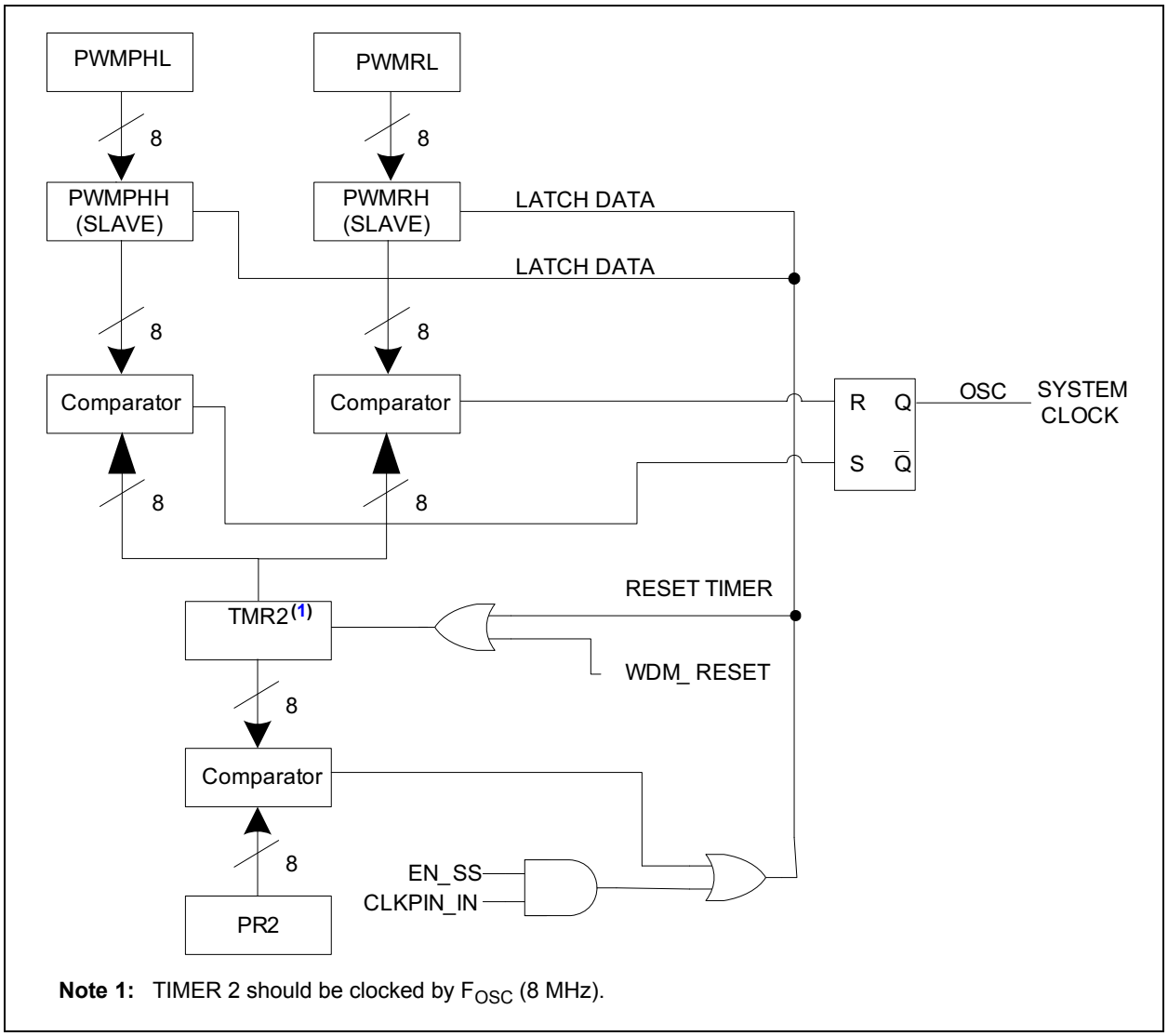

Note 1: TIMER 2 should be clocked by F_{OSC} (8 MHz).

A PWM output (Figure 26-2) has a time base (period) and a time that the output stays high (duty cycle). The frequency of the PWM is the inverse of the period (1/period).

FIGURE 26-1: PWM OUTPUT

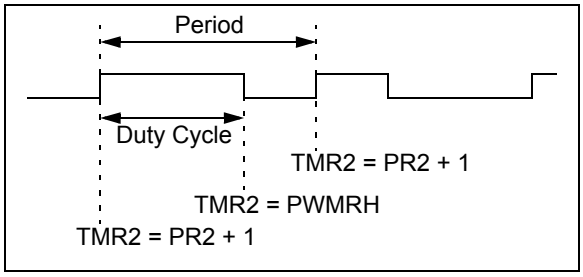

26.1.3 PWM PERIOD

The PWM period is specified by writing to the PR2 register. The PWM period can be calculated using the following equation.

EQUATION 26-3:

$$PWM_{PERIOD} = [(PR2) + 1] \times T_{OSC} \times (T2_{PRESCALE\ VALUE})$$

When TMR2 is equal to PR2, the following two events occur on the next increment cycle:

- TMR2 is cleared
- The PWM duty cycle is latched from PWMRL into PWMRH

© 2015-2018 Microchip Technology Inc.

26.1.4 PWM DUTY CYCLE (D_{CLOCK})

The PWM duty cycle (D_{CLOCK}) is specified by writing to the PWMRL register. Up to 8-bit resolution is available. The following equation is used to calculate the PWM duty cycle (D_{CLOCK}).

EQUATION 26-4:

$$PWM_{DUTY\ CYCLE} = PWMRL \times T_{OSC} \times (T2_{PRESCALE\ VALUE})$$

The PWMRL bits can be written to at any time, but the duty cycle value is not latched into PWMRH until after a match between PR2 and TMR2 occurs.

26.2 Operation During Sleep

When the device is placed in Sleep, the allocated timer will not increment and the state of the module will not change. If the CLKPIN pin is driving a value, it will continue to drive that value. When the device wakes up, it will continue from this state.

TABLE 26-1: SUMMARY OF REGISTERS ASSOCIATED WITH PWM MODULE

Name	Bit 7	Bit 6	Bit 5	Bit 4	Bit 3	Bit 2	Bit 1	Bit 0	Register on page
MODECON	MSC1	MSC0	RFB	—	MSC2	—	—	—	52
T2CON	—	—	—	—	—	TMR2ON	T2CKPS1	T2CKPS0	156
PR2	Timer2 Module Period Register								157
PWMRL	PWM Register Low Byte								157*
PWMPHL	Phase Shift Low Byte								157*

Legend: — = Unimplemented locations, read as '0'. Shaded cells are not used by PWM mode.

* Page provides register information.

NOTES:

© 2015-2018 Microchip Technology Inc.

27.0 DUAL CAPTURE/COMPARE (CCD) MODULE

The CCD module is implemented on the MCP19116/7. This module is a new module based on the standard CCP module. It has two capture and compare-only register sets with no PWM function.

27.1 Capture Mode

In Capture mode, the CCxRH:CCxRL register set captures the 16-bit value of the TMR1 register when an event occurs on the DIMI pin. An event is defined as one of the following:

- Every falling edge
- Every rising edge
- Every 4th rising edge
- Every 16th rising edge

The type of event is configured by control bits CCxM3:CCxM0 (CCDCON<3:0> for register set 1 or CCDCON<7:4> for register set 2). When a capture is made, the interrupt request flag bit, CCxIF (PIR1<2> for register set 1 or PIR1<3> for register set 2), is set. The interrupt flag must be cleared in software. If another capture occurs before the value in the register set is read, the old captured value is overwritten by the new value.

27.1.1 CCX PIN CONFIGURATION

In Capture mode, the DIMI pin should be configured as an input by setting the TRIS bit for that pin.

> **Note:** If the CCD pin is configured as an output, a write to the port can cause a capture condition.

FIGURE 27-1: CAPTURE MODE OPERATION BLOCK DIAGRAM

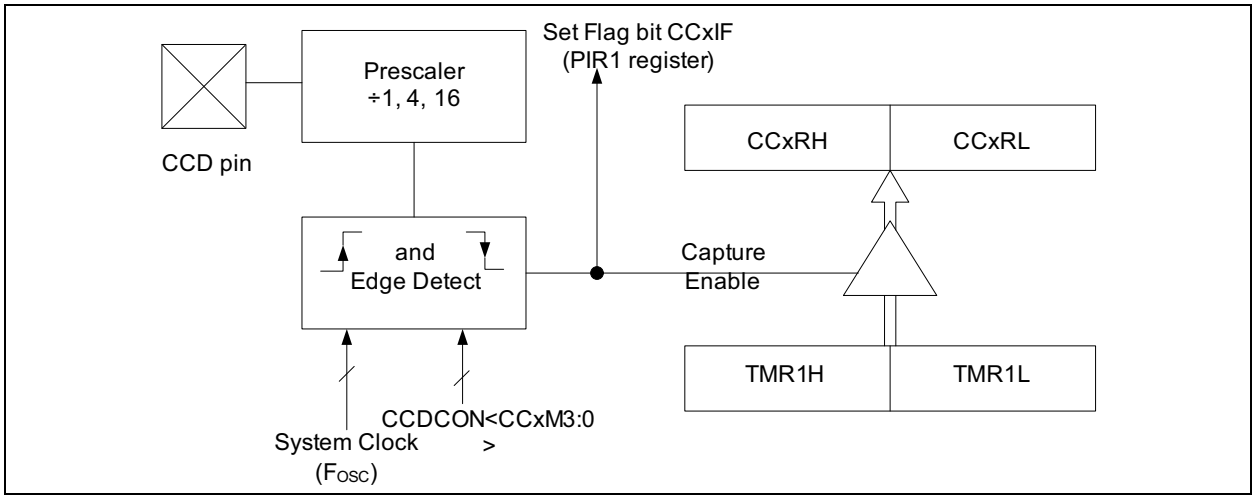

27.1.2 TIMER1 MODE SELECTION

Timer1 must be running off of the instruction clock for the CCD module to use the capture feature. If Timer1 is running off of the 8 MHz clock, the capture feature may not function correctly.

27.1.3 SOFTWARE INTERRUPT

When the Capture mode is changed, a false capture interrupt may be generated. The user should keep the enable for the capture interrupt clear in order to avoid false interrupts and should clear the flag bit, CCxIF, following any such change in the operating mode.

27.1.4 CCD PRESCALER

There are four prescaler settings, specified by bits CCxM3:CCxM0. Whenever the CCD register set is disabled or not set to Capture mode, the prescaler counter is cleared. Any reset will clear the prescaler counter.

Switching from one capture prescaler to another may generate an interrupt. Also, the prescaler counter will not be cleared, therefore, the first capture may be from a non-zero prescaler. It is recommended to disable the register set (CCxM3:0 = `00xx`) prior to changing the prescaler value.

27.2 Compare Mode

In Compare mode, the 16-bit CCDRx register value is constantly compared against the TMR1 register pair value. When a match occurs, the CMPx pin:

- Is driven high
- Is driven low
- Toggles
- Remains unchanged

The action on the pin is based on the value of the control bits, CCxM3:CCxM0. At the same time, interrupt flag bit, CCP1IF, is set.

FIGURE 27-2: COMPARE MODE OPERATION BLOCK DIAGRAM

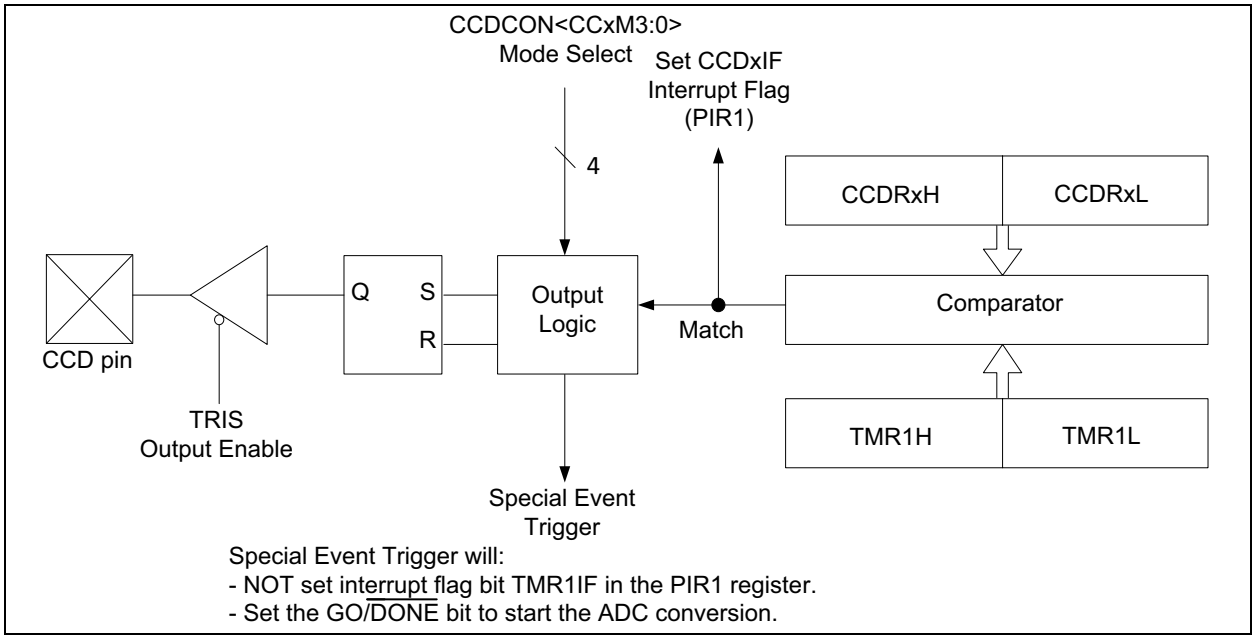

27.2.1 CMPX PIN CONFIGURATION

The user must configure the CMPx pin as an output by clearing the TRIS bit for that pin.

Clearing the CCxM<3:0> bits will set the CMPx compare output latch to the default state. This is not the GPIO pin data latch. The default state for set-on-match or toggle-on-match is `0` but the default state for clear-on-match is `1`.

27.2.2 TIMER1 MODE SELECTION

Timer1 must be running off of the instruction clock for the CCD module to use the compare feature. If Timer1 is running off of the 8 MHz clock, the compare feature may not function correctly.

27.2.3 SOFTWARE INTERRUPT MODE

When Generate Software Interrupt mode is chosen, the CCP1 pin is not affected. The CCP1IF bit is set, causing a CCx interrupt (if enabled).

27.2.4 SPECIAL EVENT TRIGGER

In this mode, an internal hardware trigger is generated, which may be used to initiate an action. The Special Event Trigger output of CCD does not reset the TMR1 register pair and starts an A/D conversion (if the A/D module is enabled).

Note: The Special Event Trigger from the CCD module does not set the interrupt flag bit TMR1IF (bit 0 in the PIR1 register).

© 2015-2018 Microchip Technology Inc.

27.3 Dual Capture/Compare Register

The Dual Capture/Compare Module is a new module based on the standard CCP. It has no PWM function.

REGISTER 27-1: CCDCON: DUAL CAPTURE/COMPARE CONTROL MODULE

R/W-0	R/W-0	R/W-0	R/W-0	R/W-0	R/W-0	R/W-0	R/W-0
CC2M3	CC2M2	CC2M1	CC2M0	CC1M3	CC1M2	CC1M1	CC1M0
bit 7							bit 0

Legend:		
R = Readable bit	W = Writable bit	U = Unimplemented bit, read as ‘0’
u = Bit is unchanged	x = Bit is unknown	-n = Value at POR
‘1’ = Bit is set	‘0’ = Bit is cleared	

bit 7-4 **CC2M<3:0>:** CC Register Set 2 Mode Select bits

`00xx` = Capture/Compare off (resets the module)
`0100` = Capture mode, every falling edge
`0101` = Capture mode, every rising edge
`0110` = Capture mode, every 4th rising edge
`0111` = Capture mode, every 16th rising edge
`1000` = Compare mode, set output on match (CC2IF bit is set)
`1001` = Compare mode, clear output on match (CC2IF bit is set)
`1010` = Compare mode, toggle output on match (CC2IF bit is set)
`1011` = Reserved
`11xx` = Compare mode, generate software interrupt on match (CC2IF bit is set, CMP2 pin is unaffected and configured as an I/O)
`1111` = Compare mode, trigger special event (CC2IF bit is set; **CC2 does not reset TMR1[1] and starts an A/D conversion, if the A/D module is enabled**. CMP2 pin is unaffected and configured as an I/O port)

bit 3-0 **CC1M<3:0>:** CC Register Set 1 Mode Select bits

`00xx` = Capture/Compare off (resets the module)
`0100` = Capture mode, every falling edge
`0101` = Capture mode, every rising edge
`0110` = Capture mode, every 4th rising edge
`0111` = Capture mode, every 16th rising edge
`1000` = Compare mode, set output on match (CC1IF bit is set)
`1001` = Compare mode, clear output on match (CC1IF bit is set)
`1010` = Compare mode, toggle output on match (CC1IF bit is set)
`1011` = Reserved
`11xx` = Compare mode, generate software interrupt on match (CC1IF bit is set, CMP1 pin is unaffected and configured as an I/O)
`1111` = Compare mode, trigger special event (CC1IF bit is set; **CC1 resets TMR1 and starts an A/D conversion, if the A/D module is enabled**. CMP1 pin is unaffected and configured as an I/O port).

Note 1: When the Compare interrupt is set, a PIC will typically reset TMR1. This module does NOT reset TMR1.

NOTES:

© 2015-2018 Microchip Technology Inc.

28.0 PWM CONTROL LOGIC

The PWM Control Logic implements standard comparator modules to identify events such as input undervoltage, input overvoltage and desaturation detection. The control logic takes action in hardware to appropriately enable/disable the output drive (PDRV/SDRV), as well as to set corresponding interrupt flags to be read by software. This control logic also defines normal PWM operation. For definition of individual bits within the control logic, refer to the Special Function Register (SFR) sections.

FIGURE 28-1: PWM CONTROL LOGIC

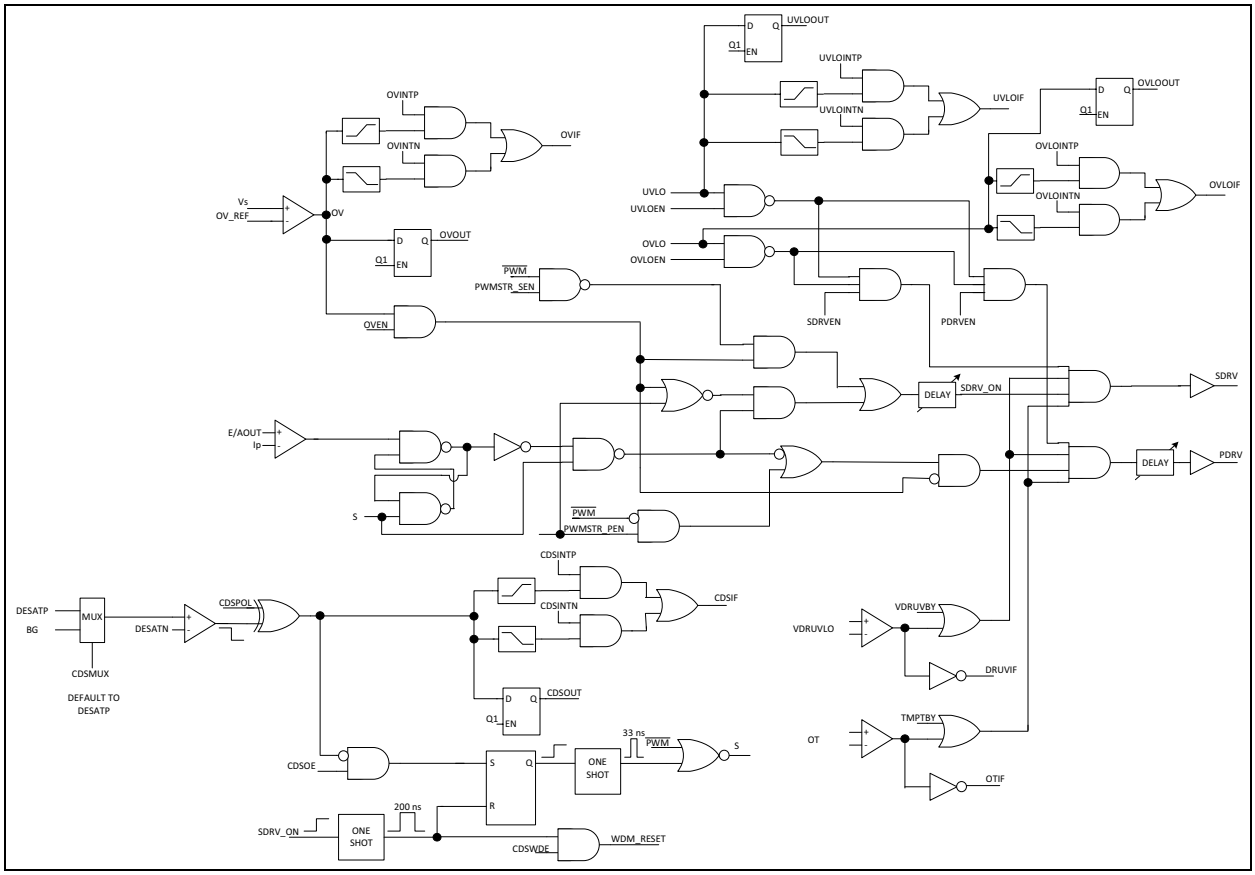

NOTES:

© 2015-2018 Microchip Technology Inc.

29.0 MASTER SYNCHRONOUS SERIAL PORT (MSSP) MODULE

29.1 MSSP Module Overview

The Master Synchronous Serial Port (MSSP) module is a serial interface useful for communicating with other peripheral or microcontroller devices. These peripheral devices may be Serial EEPROMs, shift registers, display drivers, A/D converters, etc. The MSSP module in the MCP19116/7 only operates in Inter-Integrated Circuit (I^2C) mode.

The I^2C interface supports the following modes and features:

- Master mode
- Slave mode
- Byte NACKing (Slave mode)
- Limited Multi-Master support
- 7-bit and 10-bit addressing
- Start and Stop interrupts
- Interrupt masking
- Clock stretching
- Bus collision detection
- General call address matching
- Dual Address masking
- Address Hold and Data Hold modes
- Selectable SDA hold times

Figure 29-1 is a block diagram of the I^2C interface module in Master mode. Figure 29-2 is a diagram of the I^2C interface module in Slave mode.

FIGURE 29-1: MSSP BLOCK DIAGRAM (I^2C MASTER MODE)

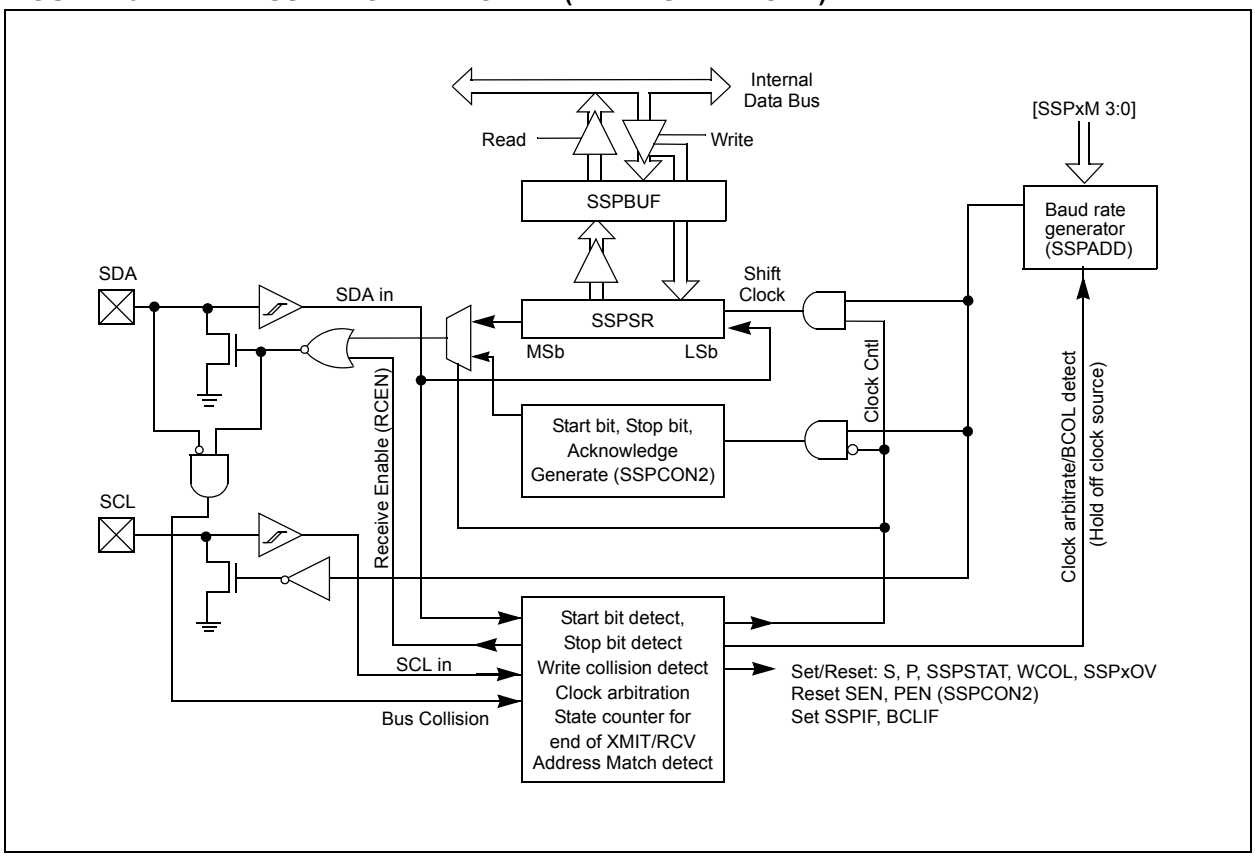

FIGURE 29-2: MSSP BLOCK DIAGRAM (I^2C SLAVE MODE)

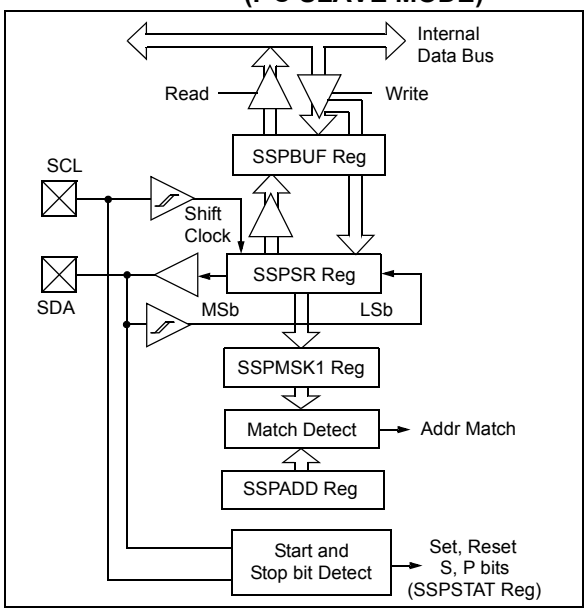

29.2 I^2C MODE OVERVIEW

The Inter-Integrated Circuit Bus (I^2C) is a multi-master serial data communication bus. Devices communicate in a master/slave environment, where the master devices initiate the communication. A Slave device is controlled through addressing.

The I^2C bus specifies two signal connections:

- Serial Clock (SCL)
- Serial Data (SDA)

Both the SCL and SDA connections are bidirectional open-drain lines, each requiring pull-up resistors for the supply voltage. Pulling the line to ground is considered a logical zero; letting the line float is considered a logical one.

Figure 29-3 shows a typical connection between two devices configured as master and slave.

The I^2C bus can operate with one or more master devices and one or more slave devices.

There are four potential modes of operation for a given device:

- Master Transmit mode
  (master is transmitting data to a slave)
- Master Receive mode
  (master is receiving data from a slave)
- Slave Transmit mode
  (slave is transmitting data to a master)
- Slave Receive mode
  (slave is receiving data from a master)

To begin communication, a master device starts out in Master Transmit mode. The master device sends out a Start bit followed by the address byte of the slave it intends to communicate with. This is followed by a single Read/Write bit, which determines whether the master intends to transmit to or receive data from the slave device.

If the requested slave exists on the bus, it will respond with an Acknowledge bit, otherwise known as an $\overline{ACK}$. The master then continues in either Transmit mode or Receive mode and the slave continues in the complement, either in Receive mode or Transmit mode, respectively.

A Start bit is indicated by a high-to-low transition of the SDA line while the SCL line is held high. Address and data bytes are sent out Most Significant bit (MSb) first. The Read/Write bit is sent out as a logical one when the master intends to read data from the slave, and is sent out as a logical zero when it intends to write data to the slave.

FIGURE 29-3: I^2C MASTER/ SLAVE CONNECTION

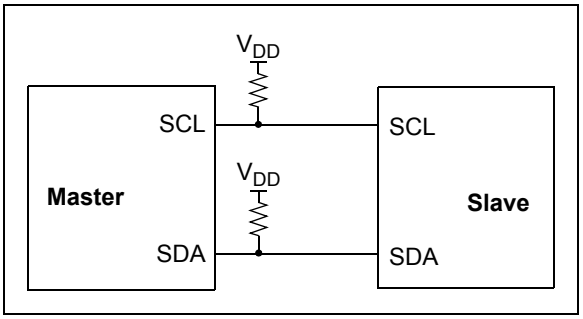

The Acknowledge bit ($\overline{ACK}$) is an active-low signal which holds the SDA line low to indicate to the transmitter that the slave device has received the transmitted data and is ready to receive more.

The transition of a data bit is always performed while the SCL line is held low. Transitions that occur while the SCL line is held high are used to indicate Start and Stop bits.

If the master intends to write to the slave, it repeatedly sends out a byte of data, with the slave responding after each byte with an $\overline{ACK}$ bit. In this example, the master device is in Master Transmit mode and the slave is in Slave Receive mode.

If the master intends to read from the slave, it repeatedly receives a byte of data from the slave and responds after each byte with an $\overline{ACK}$ bit. In this example, the master device is in Master Receive mode and the slave is Slave Transmit mode.

© 2015-2018 Microchip Technology Inc.

On the last byte of data communicated, the master device may end the transmission by sending a Stop bit. If the master device is in Receive mode, it sends the Stop bit in place of the last $\overline{ACK}$ bit. A Stop bit is indicated by a low-to-high transition of the SDA line while the SCL line is held high.

In some cases, the master may want to maintain control of the bus and re-initiate another transmission. If so, the master device may send another Start bit in place of the Stop bit or last $\overline{ACK}$ bit when it is in Receive mode.

The I^2C bus specifies three message protocols:

- Single message where a master writes data to a slave
- Single message where a master reads data from a slave
- Combined message where a master initiates a minimum of two writes, or two reads, or a combination of writes and reads, to one or more slaves

When one device is transmitting a logical one, or letting the line float, and a second device is transmitting a logical zero, or holding the line low, the first device can detect that the line is not a logical one. This detection, when used on the SCL line, is called clock stretching. Clock stretching gives slave devices a mechanism to control the flow of data. When this detection is used on the SDA line, it is called arbitration. Arbitration ensures that there is only one master device communicating at any single time.

29.2.1 CLOCK STRETCHING

When a slave device has not completed processing data, it can delay the transfer of more data through the process of Clock Stretching. An addressed slave device may hold the SCL clock line low after receiving or sending a bit, indicating that it is not yet ready to continue. The master that is communicating with the slave will attempt to raise the SCL line in order to transfer the next bit, but will detect that the clock line has not yet been released. Because the SCL connection is open-drain, the slave has the ability to hold that line low until it is ready to continue communicating.

Clock stretching allows receivers that cannot keep up with a transmitter to control the flow of incoming data.

29.2.2 ARBITRATION

Each master device must monitor the bus for Start and Stop bits. If the device detects that the bus is busy, it cannot begin a new message until the bus returns to an idle state.

However, two master devices may try to initiate a transmission at or about the same time. When this occurs, the process of arbitration begins. Each transmitter checks the level of the SDA data line and compares it to the level that it expects to find. The first transmitter to observe that the two levels don't match loses arbitration and must stop transmitting on the SDA line.

For example, if one transmitter holds the SDA line to a logical one (lets it float) and a second transmitter holds it to a logical zero (pulls it low), the result is that the SDA line will be low. The first transmitter then observes that the level of the line is different than expected and concludes that another transmitter is communicating.

The first transmitter to notice this difference is the one that loses arbitration and must stop driving the SDA line. If this transmitter is also a master device, it must also stop driving the SCL line. It then can monitor the lines for a Stop condition before trying to reissue its transmission. In the meantime, the other device that has not noticed any difference between the expected and actual levels on the SDA line continues with its original transmission. It can do so without any complications, because so far the transmission appears exactly as expected, with no other transmitter disturbing the message.

Slave Transmit mode can also be arbitrated, when a master addresses multiple slaves, but this is less common.

If two master devices are sending a message to two different slave devices at the address stage, the master sending the lower slave address always wins arbitration. When two master devices send messages to the same slave address, and addresses can sometimes refer to multiple slaves, the arbitration process must continue into the data stage.

Arbitration usually occurs very rarely, but it is a necessary process for proper multi-master support.

29.3 I²C MODE OPERATION

All MSSP I²C communication is byte-oriented and shifted out MSb first. Six SFR registers and two interrupt flags interface the module with the PIC microcontroller and with the user's software. Two pins, SDA and SCL, are exercised by the module to communicate with other external I²C devices.

29.3.1 BYTE FORMAT

All communication in I²C is done in 9-bit segments. A byte is sent from a Master to a Slave or vice versa, followed by an Acknowledge bit sent back. After the 8th falling edge of the SCL line, the device outputting data on the SDA changes that pin to an input and reads in an acknowledge value on the next clock pulse.

The clock signal, SCL, is provided by the master. Data is valid to change while the SCL signal is low, and sampled on the rising edge of the clock. Changes on the SDA line while the SCL line is high define special conditions on the bus, explained in the following sections.

29.3.2 DEFINITION OF I²C TERMINOLOGY

There is language and terminology in the description of I²C communication that have definitions specific to I²C. Such word usage is defined in Table 29-1 and may be used in the rest of this document without explanation. The information in this table was adapted from the Philips I²C specification.

29.3.3 SDA AND SCL PINS

Selecting any I²C mode with the SSPEN bit set forces the SCL and SDA pins to be open-drain. These pins should be set by the user to inputs by setting the appropriate TRIS bits.

Note: Data is tied to output zero when an I²C mode is enabled.

29.3.4 SDA HOLD TIME

The hold time of the SDA pin is selected by the SDAHT bit in the SSPCON3 register. Hold time is the time SDA is held valid after the falling edge of SCL. Setting the SDAHT bit selects a longer 300 ns minimum hold time and may help on buses with large capacitance.

TABLE 29-1: I²C BUS TERMS

Term	Description
Transmitter	The device that shifts data out onto the bus
Receiver	The device that shifts data in from the bus
Master	The device that initiates a transfer, generates clock signals and terminates a transfer
Slave	The device addressed by the master
Multi-Master	A bus with more than one device that can initiate data transfers
Arbitration	Procedure to ensure that only one master at a time controls the bus. Winning arbitration ensures that the message is not corrupted.
Synchronization	Procedure to synchronize the clocks of two or more devices on the bus
Idle	No master is controlling the bus and both SDA and SCL lines are high
Active	Any time one or more master devices are controlling the bus
Addressed Slave	Slave device that has received a matching address and is actively being clocked by a master
Matching Address	Address byte that is clocked into a slave that matches the value stored in SSPADDx
Write Request	Slave receives a matching address with R/$\overline{W}$ bit clear and is ready to clock in data
Read Request	Master sends an address byte with the R/$\overline{W}$ bit set, indicating that it wishes to clock data out of the Slave. The data that follows is read by the Master. A data transfer is terminated by a Stop condition which is generated by the Master. The Master could also generate a repeated START condition is applicable.
Clock Stretching	When a device on the bus holds SCL low to stall communication
Bus Collision	Any time the SDA line is sampled low by the module while it is outputting and expected high state

© 2015-2018 Microchip Technology Inc.

29.3.5 START CONDITION

The I²C specification defines a Start condition as a transition of SDA from a high state to a low state, while SCL line is high. A Start condition is always generated by the master and signifies the transition of the bus from an Idle to an Active state. Figure 29-4 shows the wave forms for Start and Stop conditions.

A bus collision can occur on a Start condition if the module samples the SDA line low before asserting it low. This does not conform to the I²C Specification that states no bus collision can occur on a Start.

29.3.6 STOP CONDITION

A Stop condition is a transition of the SDA line from low-to-high state while the SCL line is high.

> **Note:** At least one SCL low time must appear before a Stop is valid. Therefore, if the SDA line goes low then high again while the SCL line stays high, only the Start condition is detected.

29.3.7 RESTART CONDITION

A Restart is valid any time that a Stop is valid. A master can issue a Restart if it wishes to hold the bus after terminating the current transfer. A Restart has the same effect on the slave that a Start would, resetting all slave logic and preparing it to clock in an address. The master may want to address the same or another slave.

In 10-bit Addressing Slave mode, a Restart is required for the master to clock data out of the addressed slave. Once a slave has been fully addressed, matching both high and low address bytes, the master can issue a Restart and the high address byte with the R/$\overline{W}$ bit set. The slave logic will then hold the clock and prepare to clock out data.

After a full match with R/$\overline{W}$ clear in 10-bit mode, a prior match flag is set and maintained until a Stop condition, a high address with R/$\overline{W}$ clear or a high address match fails.

29.3.8 START/STOP CONDITION INTERRUPT MASKING

The SCIE and PCIE bits in the SSPCON3 register can enable the generation of an interrupt in Slave modes that do not typically support this function. These bits will have no effect on slave modes where interrupt on Start and Stop detect are already enabled.

FIGURE 29-4: I²C START AND STOP CONDITIONS

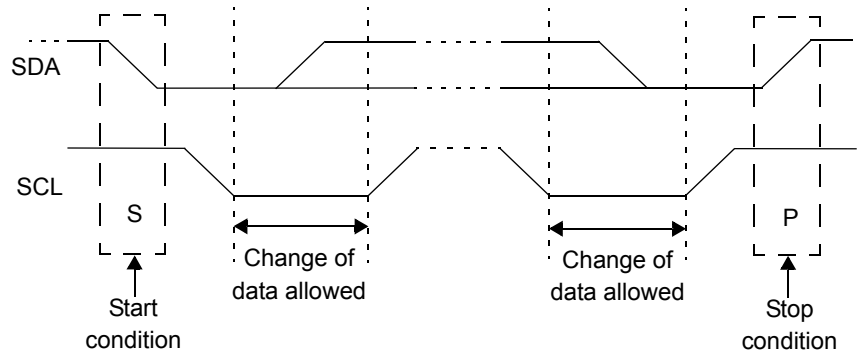

FIGURE 29-5: I²C RESTART CONDITION

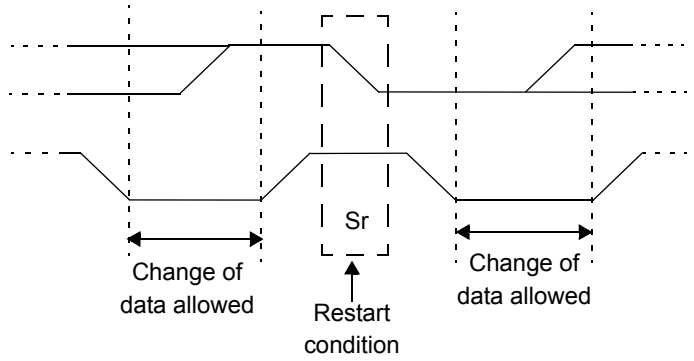

29.3.9 ACKNOWLEDGE SEQUENCE

The 9th SCL pulse for any transferred byte in I²C is dedicated as an Acknowledge. It allows receiving devices to respond back to the transmitter by pulling the SDA line low. The transmitter must release control of the line during this time to shift in the response. The Acknowledge ($\overline{ACK}$) is an active-low signal, pulling the SDA line low, indicating to the transmitter that the device has received the transmitted data and is ready to receive more.

The result of an $\overline{ACK}$ is placed in the ACKSTAT bit in the SSPCON2 register.

Slave software, when the AHEN and DHEN bits are set, allows the user to set the $\overline{ACK}$ value sent back to the transmitter. The ACKDT bit in the SSPCON2 register is set/cleared to determine the response.

Slave hardware will generate an $\overline{ACK}$ response if the AHEN and DHEN bits in the SSPCON3 register are clear.

There are certain conditions where an $\overline{ACK}$ will not be sent by the slave. If the BF bit in the SSPSTAT register or the SSPOV bit in the SSPCON1 register are set when a byte is received, the $\overline{ACK}$ will not be sent.

When the module is addressed, after the 8th falling edge of SCL on the bus, the ACKTIM bit in the SSPCON3 register is set. The ACKTIM bit indicates the acknowledge time of the active bus. The ACKTIM status bit is only active when the AHEN or DHEN bits are enabled.

29.4 I²C SLAVE MODE OPERATION

The MSSP Slave mode operates in one of the four modes selected in the SSPM bits in SSPCON1 register. The modes can be divided into 7-bit and 10-bit Addressing mode. 10-bit Addressing mode operates the same as 7-bit, with some additional overhead for handling the larger addresses.

Modes with Start and Stop bit interrupts operate the same as the other modes, with SSPIF additionally getting set upon detection of a Start, Restart or Stop condition.

29.4.1 SLAVE MODE ADDRESSES

The SSPADD register contains the Slave mode address. The first byte received after a Start or Restart condition is compared against the value stored in this register. If the byte matches, the value is loaded into the SSPBUF register and an interrupt is generated. If the value does not match, the module goes idle and no indication is given to the software that anything happened.

The SSPMSK1 register affects the address matching process. Refer to **Section 29.4.10 "SSPMSK1 Register"** for more information.

29.4.2 SECOND SLAVE MODE ADDRESS

The SSPADD2 register contains a second 7-bit Slave mode address. The first byte received after a Start or Restart condition is compared against the value stored in this register. If the byte matches, the value is loaded into the SSPBUF register and an interrupt is generated. If the value does not match, the module goes idle and no indication is given to the software that anything happened.

The SSPMSK2 register affects the address matching process. Refer to **Section 29.4.10 "SSPMSK1 Register"** for more information.

29.4.2.1 I²C Slave 7-Bit Addressing Mode

In 7-bit Addressing mode, the LSb of the received data byte is ignored when determining if there is an address match.

29.4.2.2 I²C Slave 10-Bit Addressing Mode

In 10-bit Addressing mode, the first received byte is compared to the binary value of '`1 1 1 1 0 A9 A8 0`'. A9 and A8 are the two MSb of the 10-bit address and are stored in bits 2 and 1 in the SSPADD register.

After the high byte has been acknowledged, the UA bit is set and SCL is held low until the user updates SSPADD with the low address. The low-address byte is clocked in, and all 8 bits are compared to the low-address value in SSPADD. Even if there is no address match, SSPIF and UA are set and SCL is held low until SSPADD is updated to receive a high byte again. When SSPADD is updated, the UA bit is cleared. This ensures the module is ready to receive the high-address byte on the next communication.

A high- and low-address match as a write request is required at the start of all 10-bit addressing communication. A transmission can be initiated by issuing a Restart once the slave is addressed, and clocking in the high address with the R/$\overline{W}$ bit set. The slave hardware then acknowledges the read request and prepares to clock out data. This is only valid for a slave after it has received a complete high and low address-byte match.

29.4.3 SLAVE RECEPTION

When the R/$\overline{W}$ bit of a matching received address byte is clear, the R/$\overline{W}$ bit in the SSPSTAT register is cleared. The received address is loaded into the SSPBUF register and acknowledged.

When an overflow condition exists for a received address, then Not Acknowledge is given. An overflow condition is defined as either bit BF in the SSPSTAT register is set, or bit SSPOV in the SSPCON1 register is set. The BOEN bit in the SSPCON3 register modifies this operation. For more information, refer to Register 29-4.

© 2015-2018 Microchip Technology Inc.

A MSSP interrupt is generated for each transferred data byte. Flag bit SSPIF must be cleared by software.

When the SEN bit in the SSPCON2 register is set, SCL will be held low (clock stretch) following each received byte. The clock must be released by setting the CKP bit in the SSPCON1 register, except sometimes in 10-bit mode.

29.4.3.1 7-Bit Addressing Reception

This section describes a standard sequence of events for the MSSP module configured as an I^2C Slave in 7-bit Addressing mode, including all decisions made by hardware or software and their effect on reception. Figures 29-5 and 29-6 are used as a visual reference for this description.

This is a step-by-step process of what typically must be done to accomplish I^2C communication.

1. Start bit detected.
2. S bit in the SSPSTAT register is set; SSPIF is set if interrupt-on-Start detect is enabled.
3. Matching address with R/$\overline{W}$ bit clear is received.
4. The slave pulls SDA low, sending an $\overline{ACK}$ to the master, and sets SSPIF bit.
5. Software clears the SSPIF bit.
6. Software reads received address from SSPBUF clearing the BF flag.
7. If SEN = 1, Slave software sets CKP bit to release the SCL line.
8. The master clocks out a data byte.
9. Slave drives SDA low sending an $\overline{ACK}$ to the master, and sets SSPIF bit.
10. Software clears SSPIF.
11. Software reads the received byte from SSPBUF clearing BF.
12. Steps 8-12 are repeated for all received bytes from the Master.
13. Master sends Stop condition, setting P bit in the SSPSTAT register, and the bus goes idle.

29.4.3.2 7-Bit Reception with AHEN and DHEN

Slave device reception with AHEN and DHEN set operates the same as without these options with extra interrupts and clock stretching added after the 8th falling edge of SCL. These additional interrupts allow the slave software to decide whether it wants the $\overline{ACK}$ to receive address or data byte, rather than the hardware.

This list describes the steps that need to be taken by slave software to use these options for I^2C communication. Figure 29-7 displays a module using both address and data holding. Figure 29-8 includes the operation with the SEN bit in the SSPCON2 register set.

1. S bit in the SSPSTAT register is set; SSPIF is set if interrupt-on-Start detect is enabled.
2. Matching address with R/$\overline{W}$ bit clear is clocked in. SSPIF is set and CKP cleared after the 8th falling edge of SCL.
3. Slave clears the SSPIF.
4. Slave can look at the ACKTIM bit in the SSPCON3 register to determine if the SSPIF was after or before the $\overline{ACK}$.
5. Slave reads the address value from SSPBUF, clearing the BF flag.
6. Slave sets $\overline{ACK}$ value clocked out to the master by setting ACKDT.
7. Slave releases the clock by setting CKP.
8. SSPxIF is set after an $\overline{ACK}$, not after a NACK.
9. If SEN = 1 the slave hardware will stretch the clock after the $\overline{ACK}$.
10. Slave clears SSPIF.

Note: SSPIF is still set after the 9th falling edge of SCL even if there is no clock stretching and BF has been cleared. The SSPIF is not set only when NACK is sent to Master.

11. SSPIF set and CKP cleared after 8th falling edge of SCL for a received data byte.
12. Slave looks at ACKTIM bit in the SSPCON3 register to determine the source of the interrupt.
13. Slave reads the received data from SSPBUF clearing BF.
14. Steps 7-14 are the same for each received data byte.
15. Communication is ended by either the slave sending an $\overline{ACK}$ = 1 or the master sending a Stop condition. If a Stop is sent and Interrupt-on-Stop Detect is disabled, the slave will only know by polling the P bit in the SSPSTAT register.

FIGURE 29-6: I²C SLAVE, 7-BIT ADDRESS, RECEPTION (SEN = 0, AHEN = 0, DHEN = 0)

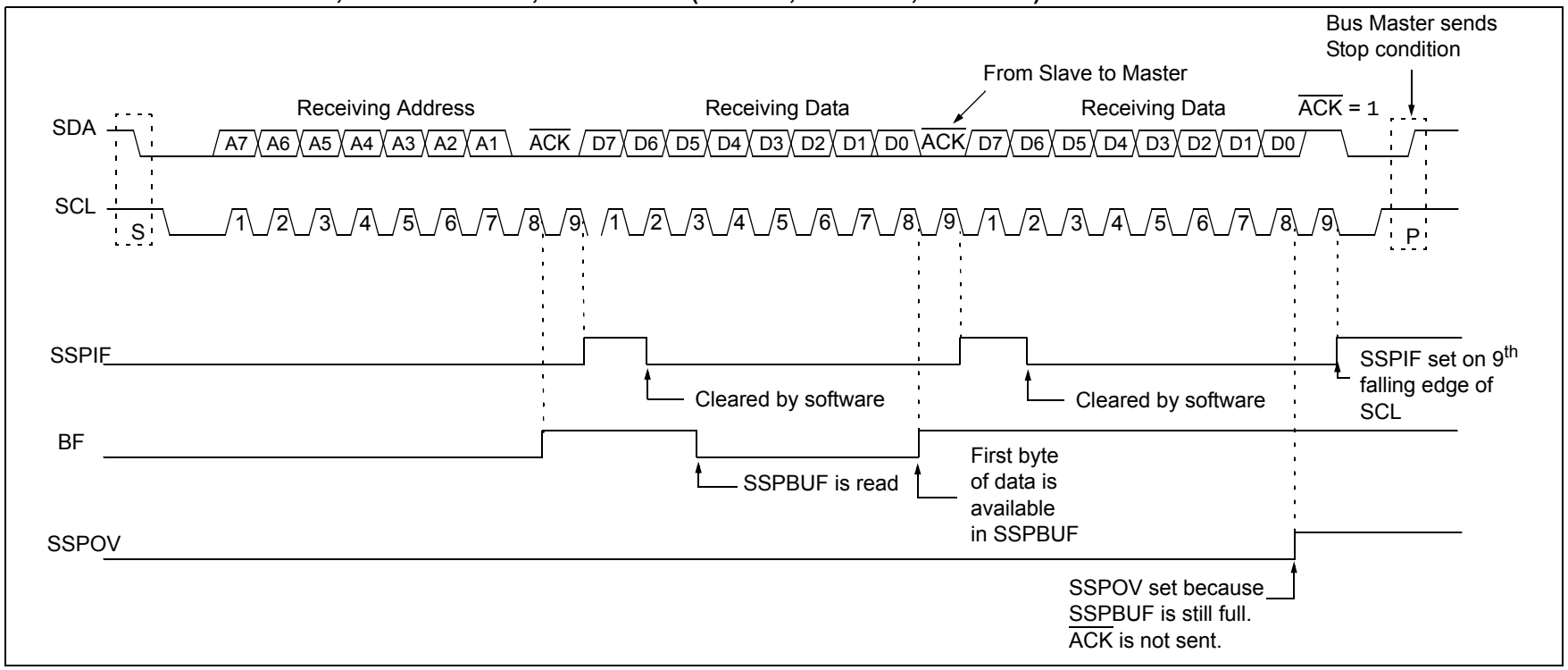

© 2015-2018 Microchip Technology Inc.

FIGURE 29-7: I²C SLAVE, 7-BIT ADDRESS, RECEPTION (SEN = 1, AHEN = 0, DHEN = 0)

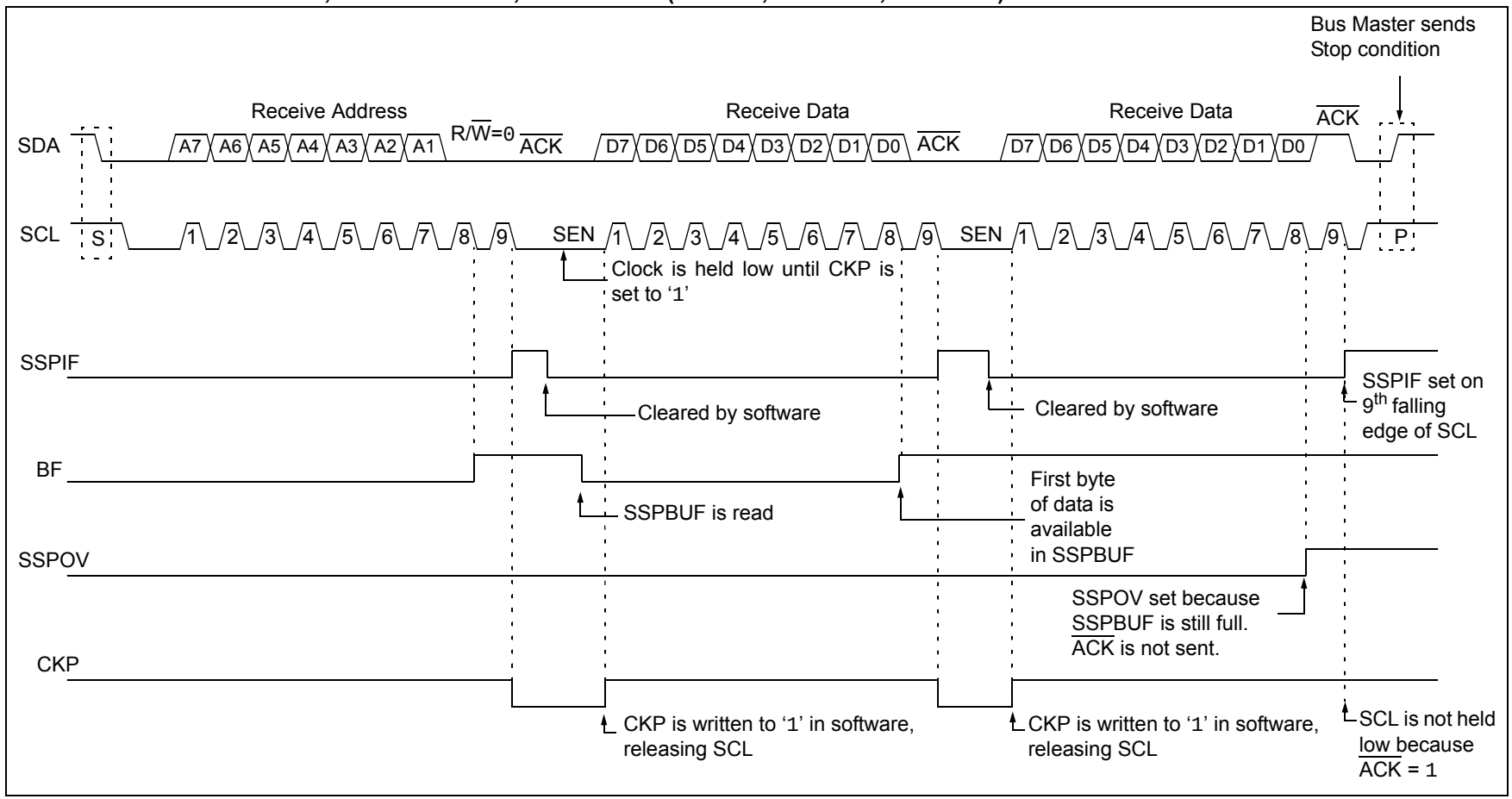

© 2015-2018 Microchip Technology Inc.

FIGURE 29-8: I²C SLAVE, 7-BIT ADDRESS, RECEPTION (SEN = 0, AHEN = 1, DHEN = 1)

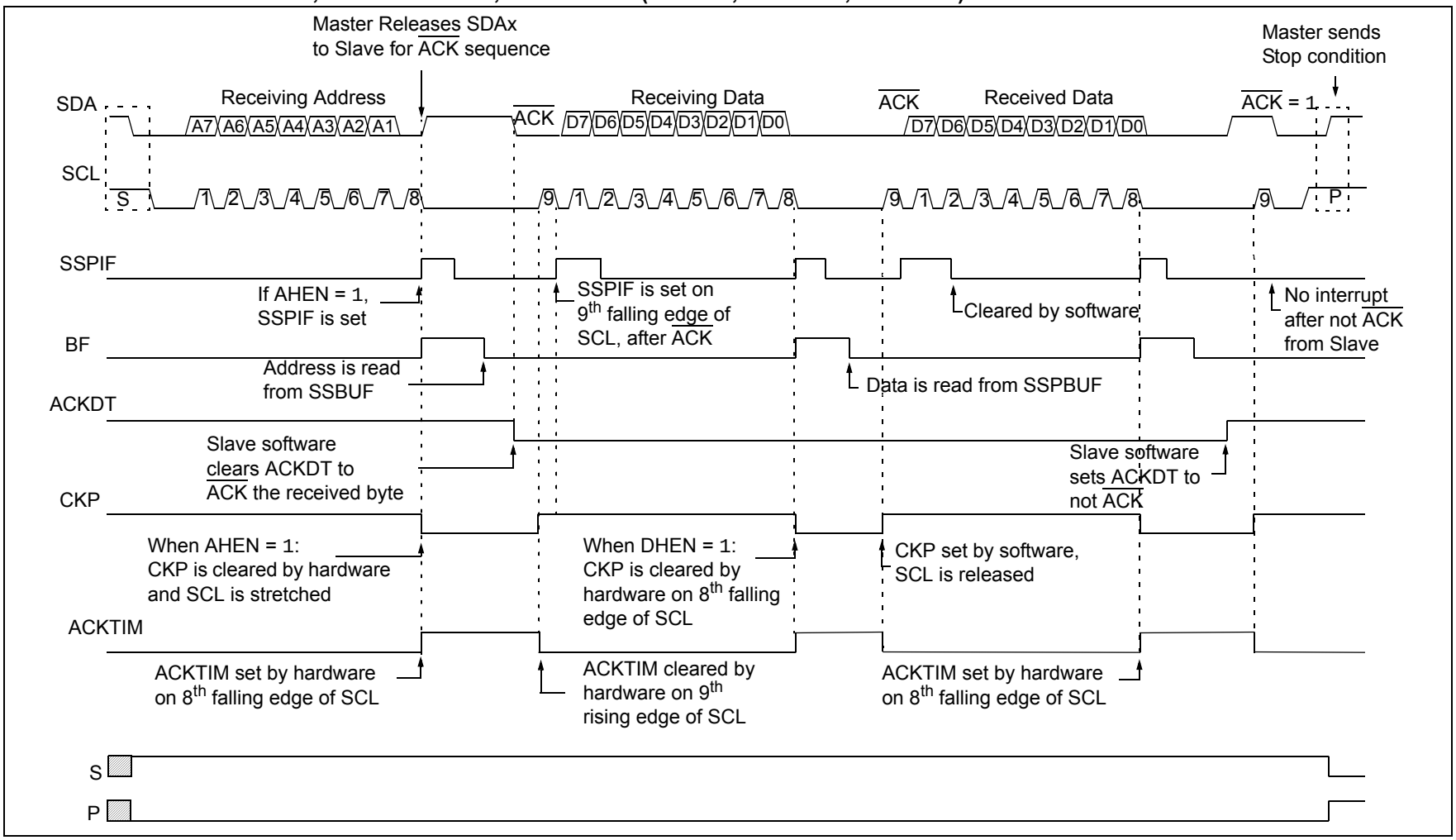

© 2015-2018 Microchip Technology Inc.

FIGURE 29-9: I²C SLAVE, 7-BIT ADDRESS, RECEPTION (SEN = 1, AHEN = 1, DHEN = 1)

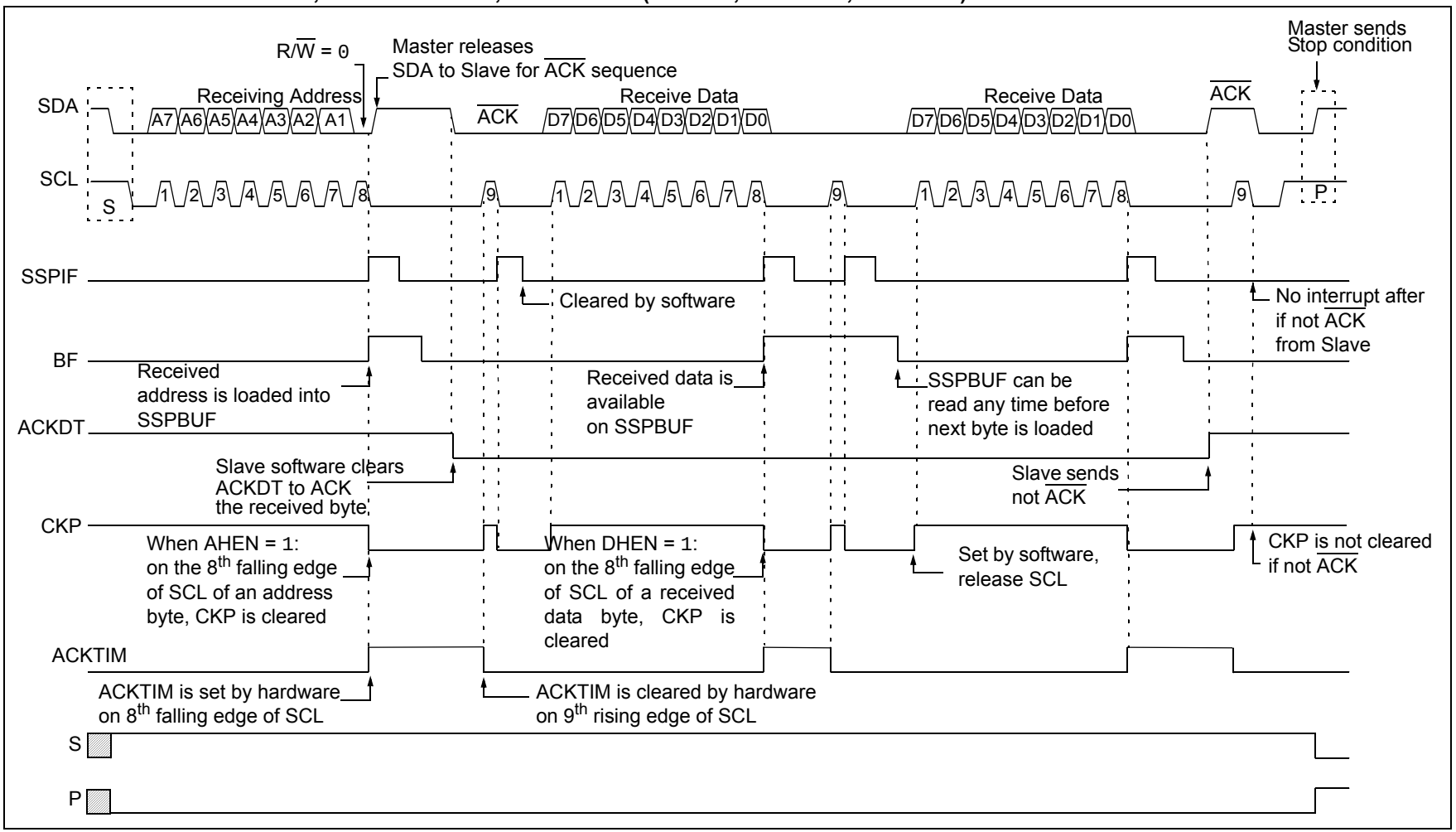

© 2015-2018 Microchip Technology Inc.

29.4.4 SLAVE TRANSMISSION

When the R/$\overline{W}$ bit of the incoming address byte is set and an address match occurs, the R/$\overline{W}$ bit in the SSPSTAT register is set. The received address is loaded into the SSPBUF register and an $\overline{ACK}$ pulse is sent by the slave on the 9th bit.

Following the $\overline{ACK}$, slave hardware clears the CKP bit and the SCL pin is held low. Refer to **Section 29.4.7, Clock Stretching** for more details. By stretching the clock, the master will be unable to assert another clock pulse until the slave is done preparing the transmit data.

The transmit data must be loaded into the SSPBUF register, which also loads the SSPSR register. Then the SCL pin should be released by setting the CKP bit in the SSPCON1 register. The eight data bits are shifted out on the falling edge of the SCL input. This ensures that the SDA signal is valid during the SCL high time.

The $\overline{ACK}$ pulse from the master-receiver is latched on the rising edge of the 9th SCL input pulse. This $\overline{ACK}$ value is copied to the ACKSTAT bit in the SSPCON2 register. If ACKSTAT is set (not $\overline{ACK}$), the data transfer is complete. In this case, when the not $\overline{ACK}$ is latched by the slave, the slave goes idle and waits for another occurrence of the Start bit. If the SDA line was low ($\overline{ACK}$), the next transmit data must be loaded into the SSPBUF register. Again, the SCL pin must be released by setting bit CKP.

An MSSP interrupt is generated for each data transfer byte. The SSPIF bit must be cleared by software, and the SSPSTAT register is used to determine the status of the byte. The SSPIF bit is set on the falling edge of the 9th clock pulse.

29.4.4.1 Slave Mode Bus Collision

A slave receives a read request and begins shifting data out on the SDA line. If a bus collision is detected and the SBCDE bit in the SSPCON3 register is set, the BCLIF bit in the PIR register is set. Once a bus collision is detected, the slave goes idle and waits to be addressed again. The user's software can use the BCLIF bit to handle a slave bus collision.

29.4.4.2 7-Bit Transmission

A master device can transmit a read request to a slave, and then it clocks data out of the slave. The list below outlines what slave software does in order to accomplish a standard transmission. Figure 29-10 can be used as a reference to this list.

1. Master sends a Start condition on SDA and SCL.
2. S bit in the SSPSTAT register is set; SSPIF is set if interrupt-on-Start detect is enabled.
3. Matching address with R/$\overline{W}$ bit set is received by the Slave setting SSPIF bit.
4. Slave hardware generates an $\overline{ACK}$ and sets SSPIF.
5. SSPIF bit is cleared by user.
6. Software reads the received address from SSPBUF, clearing BF.
7. R/$\overline{W}$ is set so CKP was automatically cleared after the $\overline{ACK}$.
8. The slave software loads the transmit data into SSPBUF.
9. CKP bit is set releasing SCL, allowing the master to clock the data out of the slave.
10. SSPIF is set after the $\overline{ACK}$ response from the master is loaded into the ACKSTAT register.
11. SSPIF bit is cleared.
12. The slave software checks the ACKSTAT bit to see if the master wants to clock out more data.

Note 1: If the master $\overline{ACK}$s, the clock will be stretched.

2: ACKSTAT is the only bit updated on the rising edge of SCL (9th) rather than on the falling edge.

13. Steps 9-13 are repeated for each transmitted byte.
14. If the master sends a not $\overline{ACK}$, the clock is not held but SSPIF is still set.
15. The master sends a Restart condition or a Stop
16. The slave is no longer addressed.

© 2015-2018 Microchip Technology Inc.

FIGURE 29-10: I²C SLAVE, 7-BIT ADDRESS, TRANSMISSION (AHEN = 0)

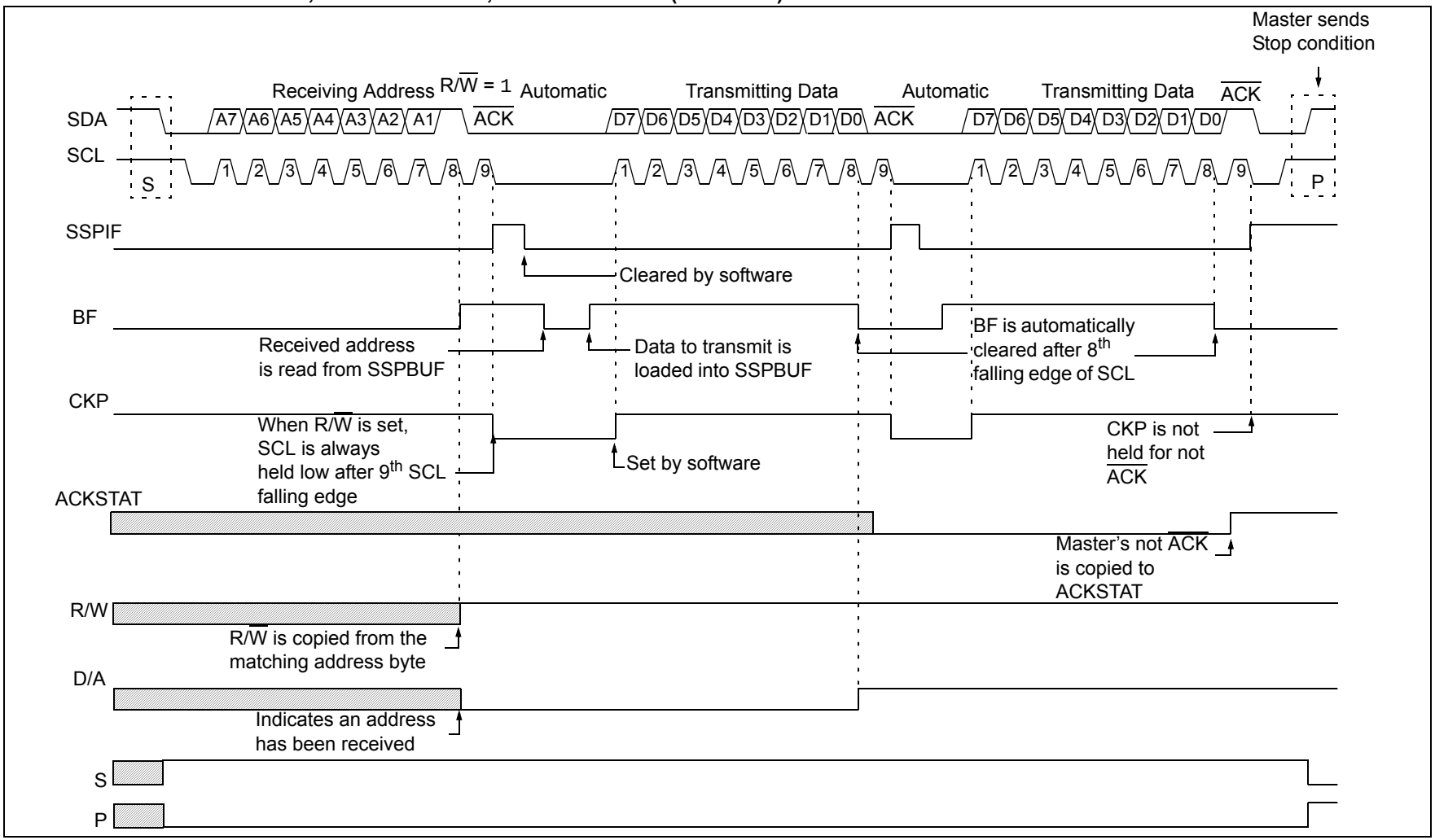

© 2015-2018 Microchip Technology Inc.

29.4.4.3 7-Bit Transmission with Address Hold Enabled

Setting the AHEN bit in the SSPCON3 register enables additional clock stretching and interrupt generation after the 8th falling edge of a received matching address. Once a matching address has been clocked in, CKP is cleared and the SSPIF interrupt is set.

Figure 29-11 displays a standard waveform of a 7-bit Address Slave Transmission with AHEN enabled.

1. Bus starts idle.
2. Master sends Start condition; the S bit in the SSPSTAT register is set; SSPIF is set if interrupt-on-Start detect is enabled.
3. Master sends matching address with R/$\overline{W}$ bit set. After the 8th falling edge of the SCL line, the CKP bit is cleared and SSPIF interrupt is generated.
4. Slave software clears SSPIF.
5. Slave software reads ACKTIM bit in the SSPCON3 register and R/$\overline{W}$ and D/$\overline{A}$ bits in the SSPSTAT register to determine the source of the interrupt.
6. Slave reads the address value from the SSPBUF register, clearing the BF bit.
7. Slave software decides from this information if it wishes to $\overline{ACK}$ or not $\overline{ACK}$, and sets ACKDT bit in the SSPCON2 register accordingly.
8. Slave sets the CKP bit releasing SCL.
9. Master clocks in the $\overline{ACK}$ value from the slave.
10. Slave hardware automatically clears the CKP bit and sets SSPIF after the $\overline{ACK}$ if the R/$\overline{W}$ bit is set.
11. Slave software clears SSPIF.
12. Slave loads value to transmit to the master into SSPBUF setting the BF bit.

Note:	SSPBUF cannot be loaded until after the $\overline{ACK}$.

13. Slave sets CKP bit releasing the clock.
14. Master clocks out the data from the slave and sends an $\overline{ACK}$ value on the 9th SCL pulse.
15. Slave hardware copies the $\overline{ACK}$ value into the ACKSTAT bit in the SSPCON2 register.
16. Steps 10-15 are repeated for each byte transmitted to the master from the slave.
17. If the master sends a not $\overline{ACK}$, the slave releases the bus, allowing the master to send a Stop and end the communication.

Note:	Master must send a not $\overline{ACK}$ on the last byte to ensure that the slave releases the SCL line to receive a Stop.

© 2015-2018 Microchip Technology Inc.

FIGURE 29-11: I²C SLAVE, 7-BIT ADDRESS, TRANSMISSION (AHEN = 1)

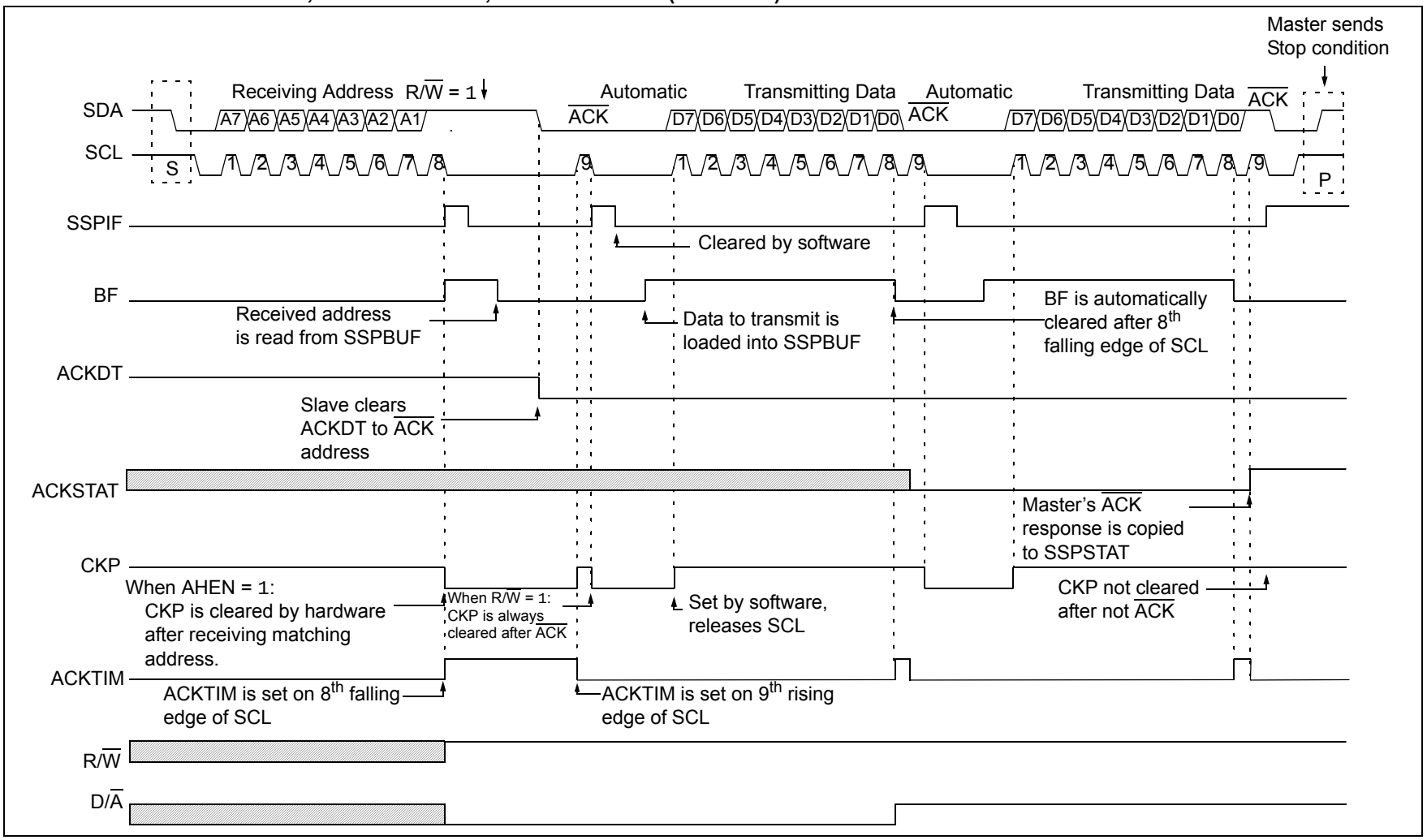

© 2015-2018 Microchip Technology Inc.

29.4.5 SLAVE MODE 10-BIT ADDRESS RECEPTION

This section describes a standard sequence of events for the MSSP module configured as an I^2C Slave in 10-bit Addressing mode.

Figure 29-12 is used as a visual reference for this description.

This is a step-by-step process of what must be done by slave software to accomplish I^2C communication:

1. Bus starts idle.
2. Master sends Start condition; S bit in the SSPSTAT register is set; SSPIF is set if interrupt-on-Start detect is enabled.
3. Master sends matching high address with R/$\overline{W}$ bit clear; UA bit in the SSPSTAT register is set.
4. Slave sends $\overline{ACK}$ and SSPIF is set.
5. Software clears the SSPIF bit.
6. Software reads received address from SSPBUF, clearing the BF flag.
7. Slave loads low address into SSPADD, releasing SCL.
8. Master sends matching low-address byte to the Slave; UA bit is set.

> **Note:** Updates to the SSPADD register are not allowed until after the $\overline{ACK}$ sequence.

9. Slave sends $\overline{ACK}$ and SSPIF is set.

> **Note:** If the low address does not match, SSPIF and UA are still set so that the slave software can set SSPADD back to the high address. BF is not set because there is no match. CKP is unaffected.

10. Slave clears SSPIF.
11. Slave reads the received matching address from SSPBUF, clearing BF.
12. Slave loads high address into SSPADD.
13. Master clocks a data byte to the slave and clocks out the slave's $\overline{ACK}$ on the 9th SCL pulse; SSPIF is set.
14. If SEN bit in the SSPCON2 register is set, CKP is cleared by hardware and the clock is stretched.
15. Slave clears SSPIF.
16. Slave reads the received byte from SSPBUF, clearing BF.
17. If SEN is set, the slave sets CKP to release the SCL.
18. Steps 13-17 are repeated for each received byte.
19. Master sends Stop to end the transmission.

29.4.6 10-BIT ADDRESSING WITH ADDRESS OR DATA HOLD

Reception using 10-bit addressing with AHEN or DHEN set is the same as with 7-bit modes. The only difference is the need to update the SSPADD register using the UA bit. All functionality, specifically when the CKP bit is cleared and the SCL line is held low, is the same. Figure 29-13 can be used as a reference of a slave in 10-bit addressing with AHEN set.

Figure 29-14 shows a standard waveform for a slave transmitter in 10-bit Addressing mode.

© 2015-2018 Microchip Technology Inc.

FIGURE 29-12: I²C SLAVE, 10-BIT ADDRESS, RECEPTION (SEN = 1, AHEN = 0, DHEN = 0)

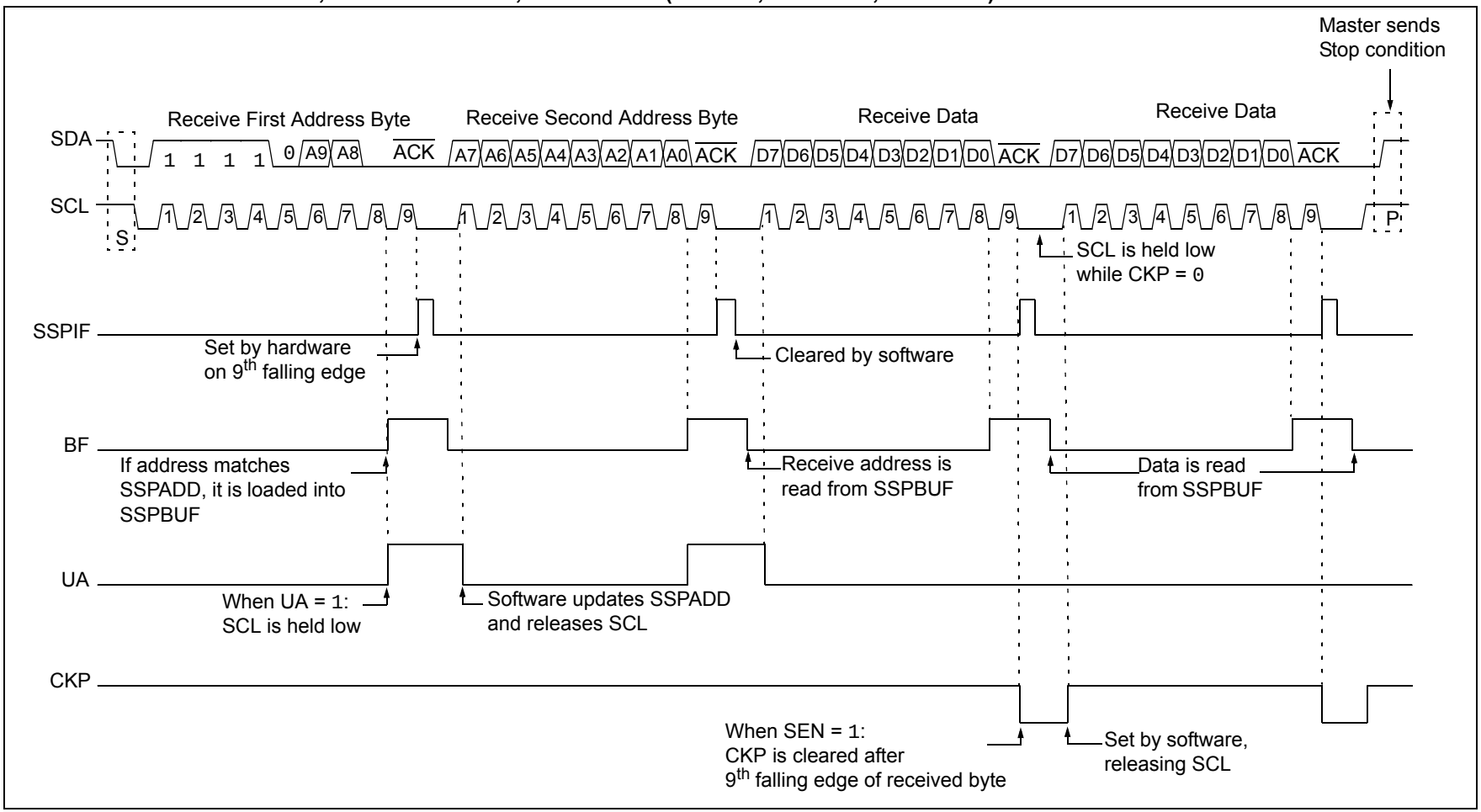

© 2015-2018 Microchip Technology Inc.

FIGURE 29-13: I²C SLAVE, 10-BIT ADDRESS, RECEPTION (SEN = 0, AHEN = 1, DHEN = 0)

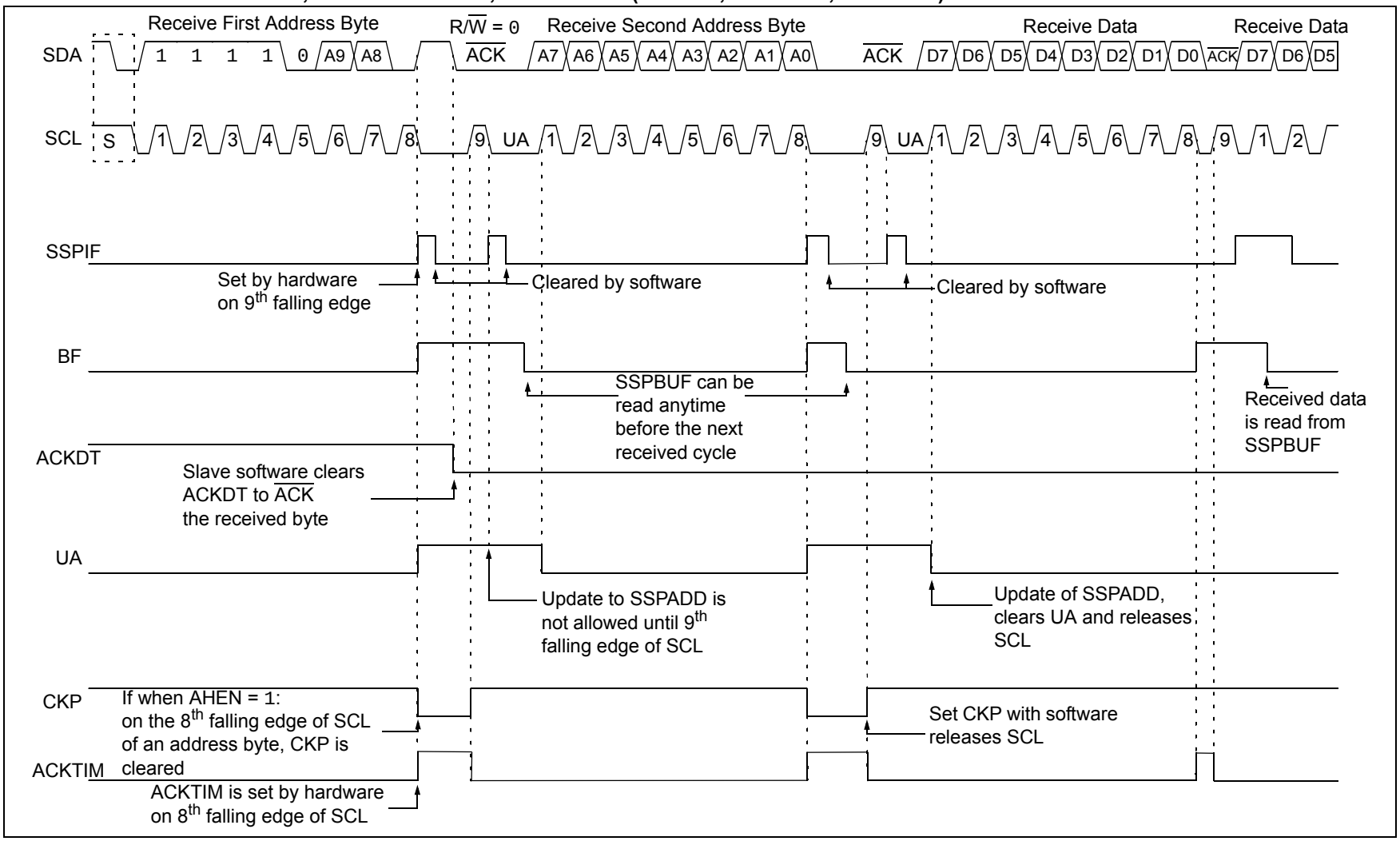

© 2015-2018 Microchip Technology Inc.

FIGURE 29-14: I²C SLAVE, 10-BIT ADDRESS, TRANSMISSION (SEN = 0, AHEN = 0, DHEN = 0)

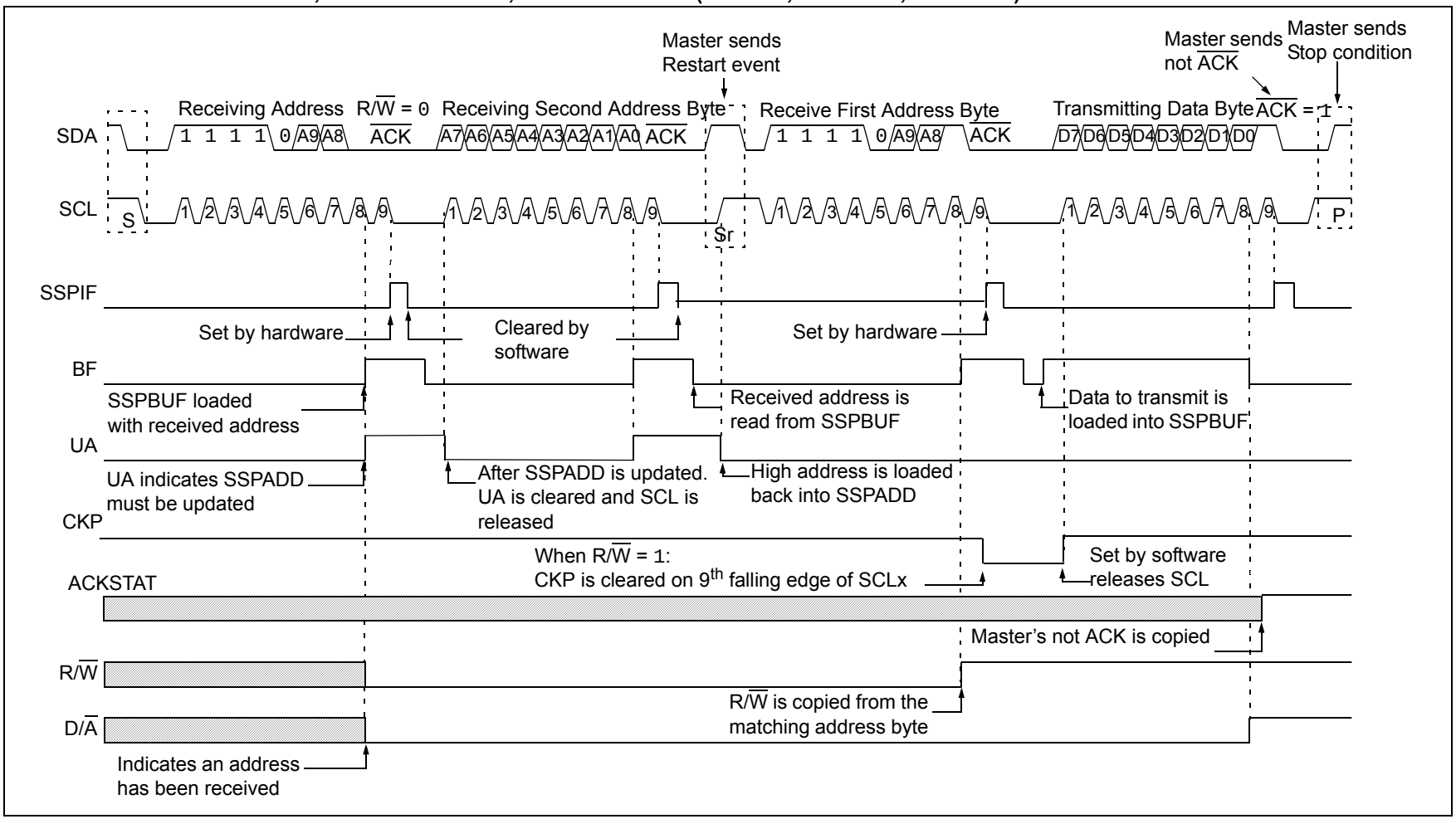

© 2015-2018 Microchip Technology Inc.

29.4.7 CLOCK STRETCHING

Clock stretching occurs when a device on the bus holds the SCL line low, effectively pausing communication. The slave may stretch the clock to allow more time to handle data or prepare a response for the master device. A master device is not concerned with stretching, as it is stretching anytime it is active on the bus and not transferring data. Any stretching done by a slave is invisible to the master software and handled by the hardware that generates SCL.

The CKP bit in the SSPCON1 register is used to control stretching in software. Any time the CKP bit is cleared, the module will wait for the SCL line to go low and then hold it. Setting CKP will release SCL and allow more communication.

29.4.7.1 Normal Clock Stretching

Following an $\overline{\text{ACK}}$, if the R/$\overline{\text{W}}$ bit in the SSPSTAT register is set, causing a read request, the slave hardware will clear CKP. This allows the slave time to update SSPBUF with data to transfer to the master. If the SEN bit in the SSPCON2 register is set, the slave hardware will always stretch the clock after the $\overline{\text{ACK}}$ sequence. Once the slave is ready, CKP is set by software and communication resumes.

> **Note 1:** The BF bit has no effect on whether the clock will be stretched or not. This is different than previous versions of the module that would not stretch the clock or clear CKP if SSPBUF was read before the 9th falling edge of SCL.
>
> **2:** Previous versions of the module did not stretch the clock for a transmission if SSPBUF was loaded before the 9th falling edge of SCL. It is now always cleared for read requests.

29.4.7.2 10-Bit Addressing Mode

In 10-bit Addressing mode, when the UA bit is set, the clock is always stretched. This is the only time the SCL is stretched without CKP being cleared. SCL is released immediately after a write to SSPADD.

> **Note:** Previous versions of the module did not stretch the clock if the second address byte did not match.

29.4.7.3 Byte NACKing

When AHEN bit in the SSPCON3 register is set, CKP is cleared by hardware after the 8th falling edge of SCL for a received matching address byte. When DHEN bit in the SSPCON3 register is set, CKP is cleared after the 8th falling edge of SCL for received data.

Stretching after the 8th falling edge of SCL allows the slave to look at the received address or data and decide if it wants to ACK the received data.

29.4.8 CLOCK SYNCHRONIZATION AND THE CKP BIT

Any time the CKP bit is cleared, the module will wait for the SCL line to go low and then hold it. However, clearing the CKP bit will not assert the SCL output low until the SCL output is already sampled low. Therefore, the CKP bit will not assert the SCL line until an external I^2C master device has already asserted the SCL line. The SCL output will remain low until the CKP bit is set and all other devices on the I^2C bus have released SCL. This ensures that a write to the CKP bit will not violate the minimum high-time requirement for SCL (refer to Figure 29-16).

FIGURE 29-15: CLOCK SYNCHRONIZATION TIMING

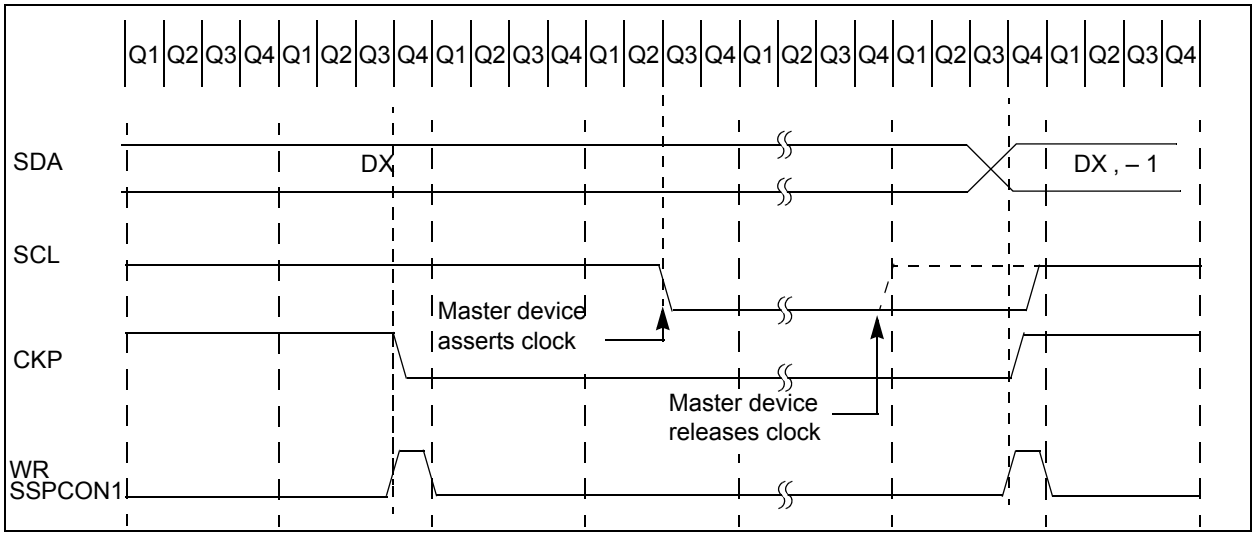

© 2015-2018 Microchip Technology Inc.

29.4.9 GENERAL CALL ADDRESS SUPPORT

The addressing procedure for the I²C bus is such that the first byte after the Start condition usually determines which device is the slave addressed by the master device. The exception is the general call address which can address all devices. When this address is used, all devices should, in theory, respond with an acknowledge.

The general call address is a reserved address in the I²C protocol, defined as address 0x00. When the GCEN bit in the SSPCON2 register is set, the slave module will automatically $\overline{\text{ACK}}$ the reception of this address regardless of the value stored in SSPADD. After the slave clocks in an address of all zeros with the R/$\overline{\text{W}}$ bit clear, an interrupt is generated and slave software can read SSPBUF and respond. Figure 29-7 shows a general call reception sequence.

In 10-bit Address mode, the UA bit will not be set on the reception of the general call address. The slave will prepare to receive the second byte as data, just as it would in 7-bit mode.

If the AHEN bit in the SSPCON3 register is set, just as with any other address reception, the slave hardware will stretch the clock after the 8th falling edge of SCL. The slave must then set its ACKDT value and release the clock with communication progressing as it would normally.

FIGURE 29-16: SLAVE MODE GENERAL CALL ADDRESS SEQUENCE

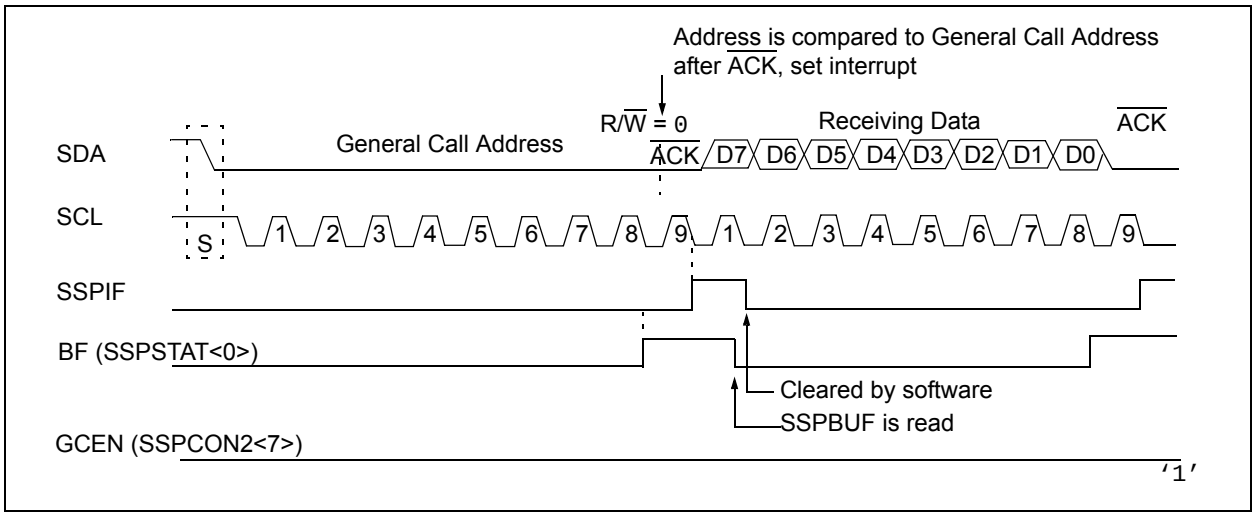

29.4.10 SSPMSK1 REGISTER

An SSP Mask (SSPMSK1) register is available in I²C Slave mode as a mask for the value held in the SSPSR register during an address comparison operation. A zero ('0') bit in the SSPMSK1 register has the effect of making the corresponding bit of the received address a "don't care".

This register is reset to all '1's upon any Reset condition and, therefore, has no effect on standard SSP operation until written with a mask value.

The SSPMSK1 register is active during:

- 7-bit Address mode: address compare of A<7:1>
- 10-bit Address mode: address compare of A<7:0> only. The SSP mask has no effect during the reception of the first (high) byte of the address

29.5 I²C MASTER MODE

Master mode is enabled by setting and clearing the appropriate SSPM bits in the SSPCON1 register and by setting the SSPEN bit. In Master mode, the SDA and SCK pins must be configured as inputs. The MSSP peripheral hardware will override the output driver TRIS controls when necessary, to drive the pins low.

The Master mode of operation is supported by interrupt generation on the detection of the Start and Stop conditions. The Stop (P) and Start (S) bits are cleared from a Reset or when the MSSP module is disabled. Control of the I²C bus may be taken when the P bit is set or the bus is idle.

In Firmware-Controlled Master mode, user code conducts all I²C bus operations based on Start and Stop bit condition detection. Start and Stop condition detection is the only active circuitry in this mode. All other communication is done by the user's software directly manipulating the SDA and SCL lines.

The following events will cause the SSP Interrupt Flag bit (SSPIF) to be set (SSP interrupt, if enabled):

- Start condition detected
- Stop condition detected
- Data-transfer byte transmitted/received
- Acknowledge transmitted/received
- Repeated Start generated

Note 1: The MSSP module, when configured in I²C Master mode, does not allow queuing of events. For instance, the user is not allowed to initiate a Start condition and immediately write the SSPBUF register to initiate transmission before the Start condition is complete. In this case, the SSPBUF will not be written to and the WCOL bit will be set, indicating that a write to the SSPBUF did not occur.

2: When in Master mode, Start/Stop detection is masked and an interrupt is generated when the SEN/PEN bit is cleared and the generation is complete.

29.5.1 I²C MASTER MODE OPERATION

The master device generates all of the serial clock pulses and the Start and Stop conditions. A transfer is ended with a Stop condition or with a Repeated Start condition. Since the Repeated Start condition is also the beginning of the next serial transfer, the I²C bus is not released.

In Master Transmit mode, serial data is output through SDA while SCL outputs the serial clock. The first byte transmitted contains the slave address of the receiving device (7 bits) and the Read/$\overline{\text{Write}}$ (R/$\overline{\text{W}}$) bit. In this case, the R/$\overline{\text{W}}$ bit is logic '0'. Serial data is transmitted eight bits at a time. After each byte is transmitted, an Acknowledge bit is received. Start and Stop conditions are output to indicate the beginning and the end of a serial transfer.

In Master Receive mode, the first byte transmitted contains the slave address of the transmitting device (7 bits) and the R/$\overline{\text{W}}$ bit. In this case, the R/$\overline{\text{W}}$ bit is logic '1'. Thus, the first byte transmitted is a 7-bit slave address followed by a '1' to indicate the receive bit. Serial data is received via SDA, while SCL outputs the serial clock. Serial data is received eight bits at a time. After each byte is received, an Acknowledge bit is transmitted. Start and Stop conditions indicate the beginning and end of transmission.

A Baud Rate Generator is used to set the clock frequency output on SCL. Refer to **Section 29.6 "Baud Rate Generator"** for more details.

29.5.2 CLOCK ARBITRATION

Clock arbitration occurs when the master, during any Receive, Transmit or Repeated Start/Stop condition, releases the SCL pin (SCL allowed to float high). When the SCL pin is allowed to float high, the Baud Rate Generator (BRG) is suspended from counting until the SCL pin is actually sampled high. When the SCL pin is sampled high, the Baud Rate Generator is reloaded with the contents of SSPADD<7:0> and begins counting. This ensures that the SCL high time will always be at least one BRG rollover count in the event that the clock is held low by an external device (Figure 29-17).

© 2015-2018 Microchip Technology Inc.

FIGURE 29-17: BAUD RATE GENERATOR TIMING WITH CLOCK ARBITRATION

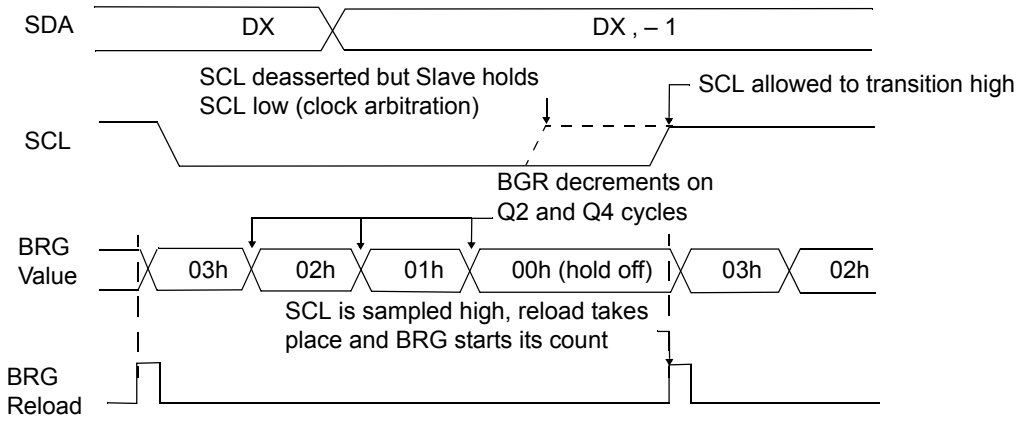

29.5.3 WCOL STATUS FLAG

If the user writes the SSPBUF when a Start, Restart, Stop, Receive or Transmit sequence is in progress, the WCOL is set and the contents of the buffer are unchanged (the write does not occur). Any time the WCOL bit is set, it indicates that an action on SSPBUF was attempted while the module was not idle.

Note:	Because queuing of events is not allowed, writing to the lower five bits in the SSPCON2 register is disabled until the Start condition is complete.

29.5.4 I²C MASTER MODE START CONDITION TIMING

To initiate a Start condition, the user sets the Start Enable bit, SEN, in the SSPCON2 register. If the SDA and SCL pins are sampled high, the Baud Rate Generator is reloaded with the contents of SSPADD<7:0> and starts its count. If SCL and SDA are both sampled high when the Baud Rate Generator times out (T_{BRG}), the SDA pin is driven low. The action of the SDA being driven low while SCL is high is the Start condition, and causes the S bit in the SSPSTAT1 register to be set. Following this, the Baud Rate Generator is reloaded with the contents of SSPADD<7:0> and resumes its count. When the Baud Rate Generator times out (T_{BRG}), the SEN bit in the SSPCON2 register will be automatically cleared by hardware; the Baud Rate Generator is suspended, leaving the SDA line held low and the Start condition is complete.

Note 1:	If, at the beginning of the Start condition, the SDA and SCL pins are already sampled low, or if, during the Start condition, the SCL line is sampled low before the SDA line is driven low, a bus collision occurs, the Bus Collision Interrupt Flag (BCLIF) is set, the Start condition is aborted and the I²C module is reset into its idle state.
2:	The Philips I²C Specification states that a bus collision cannot occur on a Start.

FIGURE 29-18: FIRST START BIT TIMING

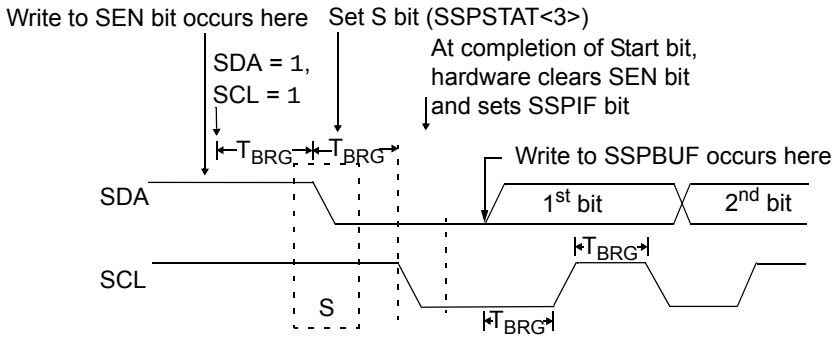

29.5.5 I²C MASTER MODE REPEATED START CONDITION TIMING

A Repeated Start condition occurs when the RSEN bit in the SSPCON2 register is programmed high and the master state machine is no longer active. When the RSEN bit is set, the SCL pin is asserted low. When the SCL pin is sampled low, the Baud Rate Generator is loaded and begins counting. The SDA pin is released (brought high) for one Baud Rate Generator count (T_{BRG}). When the Baud Rate Generator times out, if SDA is sampled high, the SCL pin will be deasserted (brought high). When SCL is sampled high, the Baud Rate Generator is reloaded and begins counting. SDA and SCL must be sampled high for one T_{BRG}. This action is then followed by assertion of the SDA pin (SDA = 0) for one T_{BRG} while SCL is high. SCL is asserted low. Following this, the RSEN bit in the SSPCON2 register will be automatically cleared and the Baud Rate Generator will not be reloaded, leaving the SDA pin held low. As soon as a Start condition is detected on the SDA and SCL pins, the S bit in the SSPSTAT register is set. The SSPIF bit will not be set until the Baud Rate Generator has timed out.

Note 1: If RSEN is programmed while any other event is in progress, it does not take effect.

2: A bus collision during the Repeated Start condition occurs if:

- SDA is sampled low when SCL goes from low to high
- SCL goes low before SDA is asserted low. This may indicate that another master is attempting to transmit a data '1'

FIGURE 29-19: REPEAT START CONDITION WAVEFORM

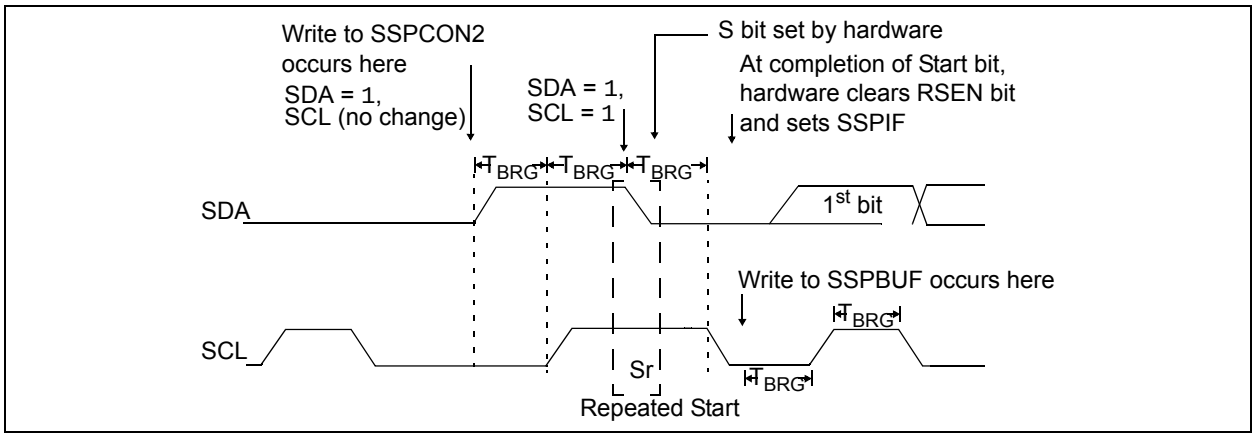

© 2015-2018 Microchip Technology Inc.

29.5.6 I²C MASTER MODE TRANSMISSION

Transmission of a data byte, a 7-bit address or the other half of a 10-bit address is accomplished by simply writing a value to the SSPBUF register. This action sets the Buffer Full (BF) flag bit and allows the Baud Rate Generator to begin counting and start the next transmission. Each bit of address/data is shifted out onto the SDA pin after the falling edge of SCL is asserted. SCL is held low for one Baud Rate Generator rollover count (T_{BRG}). Data should be valid before SCL is released high. When the SCL pin is released high, it is held that way for T_{BRG}. The data on the SDA pin must remain stable for that duration and some hold time after the next falling edge of SCL. After the 8th bit is shifted out (the falling edge of the 8th clock), the BF flag is cleared and the master releases the SDA. This allows the slave device being addressed to respond with an $\overline{ACK}$ bit during the 9th bit time if an address match occurred or if data was received properly. The status of $\overline{ACK}$ is written into the ACKSTAT bit on the rising edge of the 9th clock. If the master receives an Acknowledge, the Acknowledge Status bit (ACKSTAT) is cleared. If not, the bit is set. After the 9th clock, the SSPIF bit is set and the master clock (Baud Rate Generator) is suspended until the next data byte is loaded into the SSPBUF, leaving SCL low and SDA unchanged (Figure 29-20).

After the write to the SSPBUF, each bit of the address will be shifted out on the falling edge of SCL until all seven address bits and the R/$\overline{W}$ bit are completed. On the falling edge of the 8th clock, the master releases the SDA pin, allowing the slave to respond with an Acknowledge. On the falling edge of the 9th clock, the master samples the SDA pin to see if the address was recognized by a slave. The status of the $\overline{ACK}$ bit is loaded into the ACKSTAT status bit in the SSPCON2 register. Following the falling edge of the 9th clock transmission of the address, the SSPIF is set, the BF flag is cleared and the Baud Rate Generator is turned off until another write to the SSPBUF takes place, holding SCL low and allowing SDA to float.

29.5.6.1 BF Status Flag

In Transmit mode, the BF bit in the SSPSTAT register is set when the CPU writes to SSPBUF and is cleared when all eight bits are shifted out.

29.5.6.2 WCOL Status Flag

If the user writes the SSPBUF when a Transmit is already in progress (i.e., SSPSR is still shifting out a data byte), the WCOL is set and the contents of the buffer are unchanged (the write does not occur).

WCOL must be cleared by software before the next transmission.

29.5.6.3 ACKSTAT Status Flag

In Transmit mode, the ACKSTAT bit in the SSPCON2 register is cleared when the slave has sent an Acknowledge ($\overline{ACK}$ = 0) and is set when the slave does not Acknowledge ($\overline{ACK}$ = 1). A slave sends an Acknowledge when it has recognized its address (including a general call) or when the slave has properly received its data.

29.5.6.4 Typical Transmit Sequence

1. The user generates a Start condition by setting the SEN bit in the SSPCON2 register.
2. SSPIF is set by hardware on completion of the Start.
3. SSPIF is cleared by software.
4. The MSSP module waits the required start time before any other operation takes place.
5. The user loads the SSPBUF with the slave address to transmit.
6. Address is shifted out the SDA pin until all eight bits are transmitted. Transmission begins as soon as SSPBUF is written to.
7. The MSSP module shifts in the $\overline{ACK}$ bit from the slave device and writes its value into the ACKSTAT bit in the SSPCON2 register.
8. The MSSP module generates an interrupt at the end of the 9th clock cycle by setting the SSPIF bit.
9. The user loads the SSPBUF with eight bits of data
10. Data is shifted out the SDA pin until all eight bits are transmitted.
11. The MSSP module shifts in the $\overline{ACK}$ bit from the slave device and writes its value into the ACKSTAT bit in the SSPCON2 register.
12. Steps 8-11 are repeated for all transmitted data bytes.
13. The user generates a Stop or Restart condition by setting the PEN or RSEN bits in the SSPCON2 register. Interrupt is generated once the Stop/Restart condition is complete.

FIGURE 29-20: I²C MASTER MODE WAVEFORM (TRANSMISSION, 7 OR 10-BIT ADDRESS)

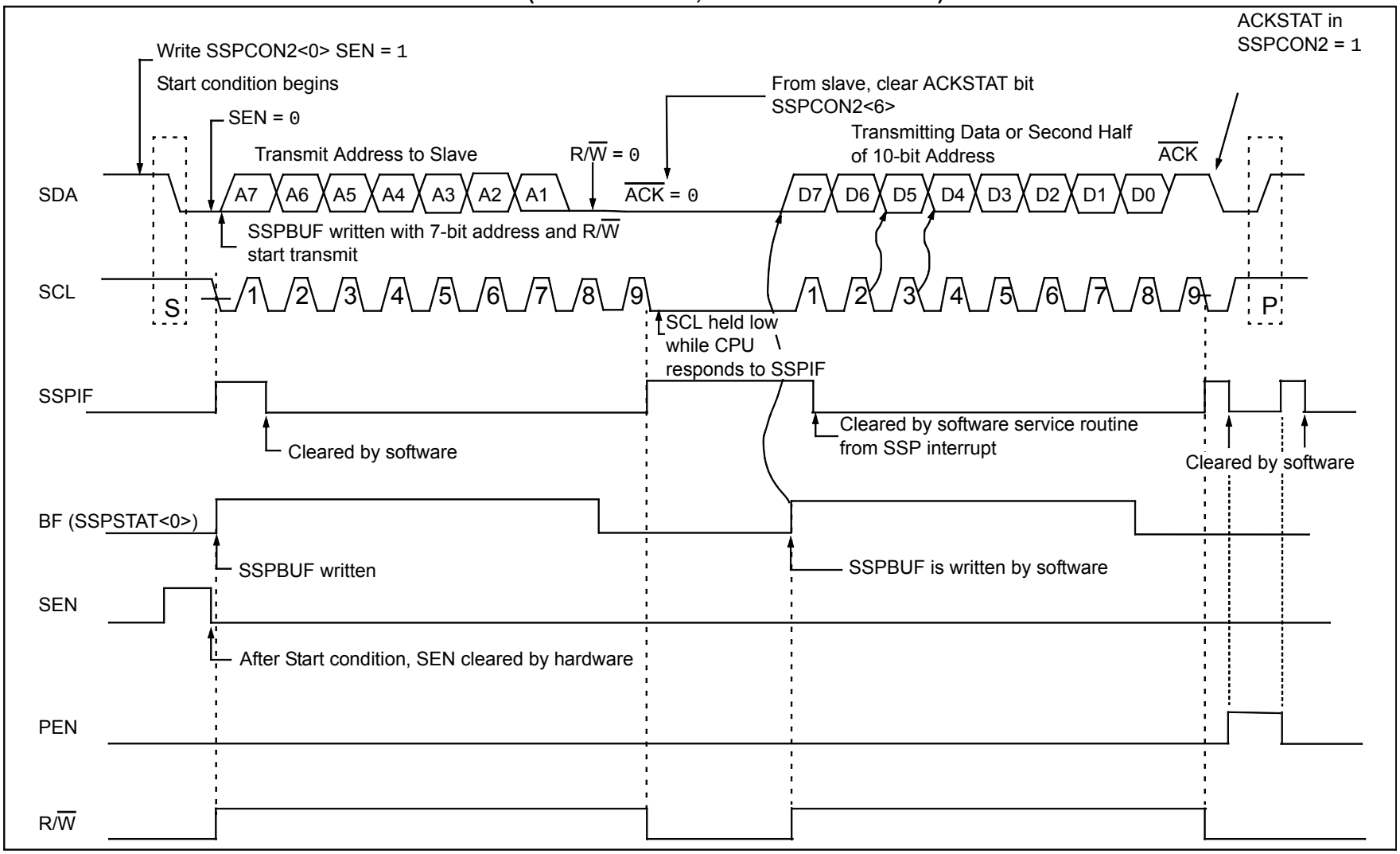

© 2015-2018 Microchip Technology Inc.

29.5.7 I²C MASTER MODE RECEPTION

Master mode reception is enabled by programming the Receive Enable (RCEN) bit in the SSPCON2 register.

Note:	The MSSP module must be in an idle state before the RCEN bit is set or the RCEN bit will be disregarded.

The Baud Rate Generator begins counting and, upon each rollover, the state of the SCL pin changes (high-to-low/low-to-high) and data is shifted into the SSPSR. After the falling edge of the 8th clock, the receive enable flag is automatically cleared, the contents of the SSPSR are loaded into the SSPBUF, the BF flag bit is set, the SSPIF flag bit is set and the Baud Rate Generator is suspended from counting, holding SCL low. The MSSP is now in idle state awaiting the next command. When the buffer is read by the CPU, the BF flag bit is automatically cleared. The user can then send an Acknowledge bit at the end of reception by setting the Acknowledge Sequence Enable (ACKEN) bit in the SSPCON2 register.

29.5.7.1 BF Status Flag

In receive operation, the BF bit is set when an address or data byte is loaded into SSPBUF from SSPSR. It is cleared when the SSPBUF register is read.

29.5.7.2 SSPOV Status Flag

In receive operation, the SSPOV bit is set when 8 bits are received into the SSPSR and the BF flag bit is already set from a previous reception.

29.5.7.3 WCOL Status Flag

If the user writes the SSPBUF when a receive is already in progress (i.e., SSPSR is still shifting in a data byte), the WCOL bit is set and the contents of the buffer are unchanged (the write does not occur).

29.5.7.4 Typical Receive Sequence

1. The user generates a Start condition by setting the SEN bit in the SSPCON2 register.
2. SSPIF is set by hardware on completion of the Start.
3. SSPIF is cleared by software
4. User writes SSPBUF with the slave address to transmit and the R/$\overline{W}$ bit set.
5. Address is shifted out the SDA pin until all eight bits are transmitted. Transmission begins as soon as SSPBUF is written to.
6. The MSSP module shifts in the $\overline{ACK}$ bit from the slave device and writes its value into the ACKSTAT bit in the SSPCON2 register.
7. The MSSP module generates an interrupt at the end of the 9th clock cycle by setting the SSPIF bit.
8. User sets the RCEN bit in the SSPCON2 register and the Master clocks in a byte from the slave.
9. After the 8th falling edge of SCL, SSPIF and BF are set.
10. Master clears SSPIF and reads the received byte from SSPUF, then clears BF.
11. Master sets $\overline{ACK}$ value sent to slave in ACKDT bit in the SSPCON2 register and initiates the $\overline{ACK}$ by setting the ACKEN bit.
12. Masters $\overline{ACK}$ is clocked out to the slave and SSPIF is set.
13. The user clears SSPIF.
14. Steps 8-13 are repeated for each received byte from the slave.
15. Master sends a not $\overline{ACK}$ or Stop to end communication.

FIGURE 29-21: I²C MASTER MODE WAVEFORM (RECEPTION, 7-BIT ADDRESS)

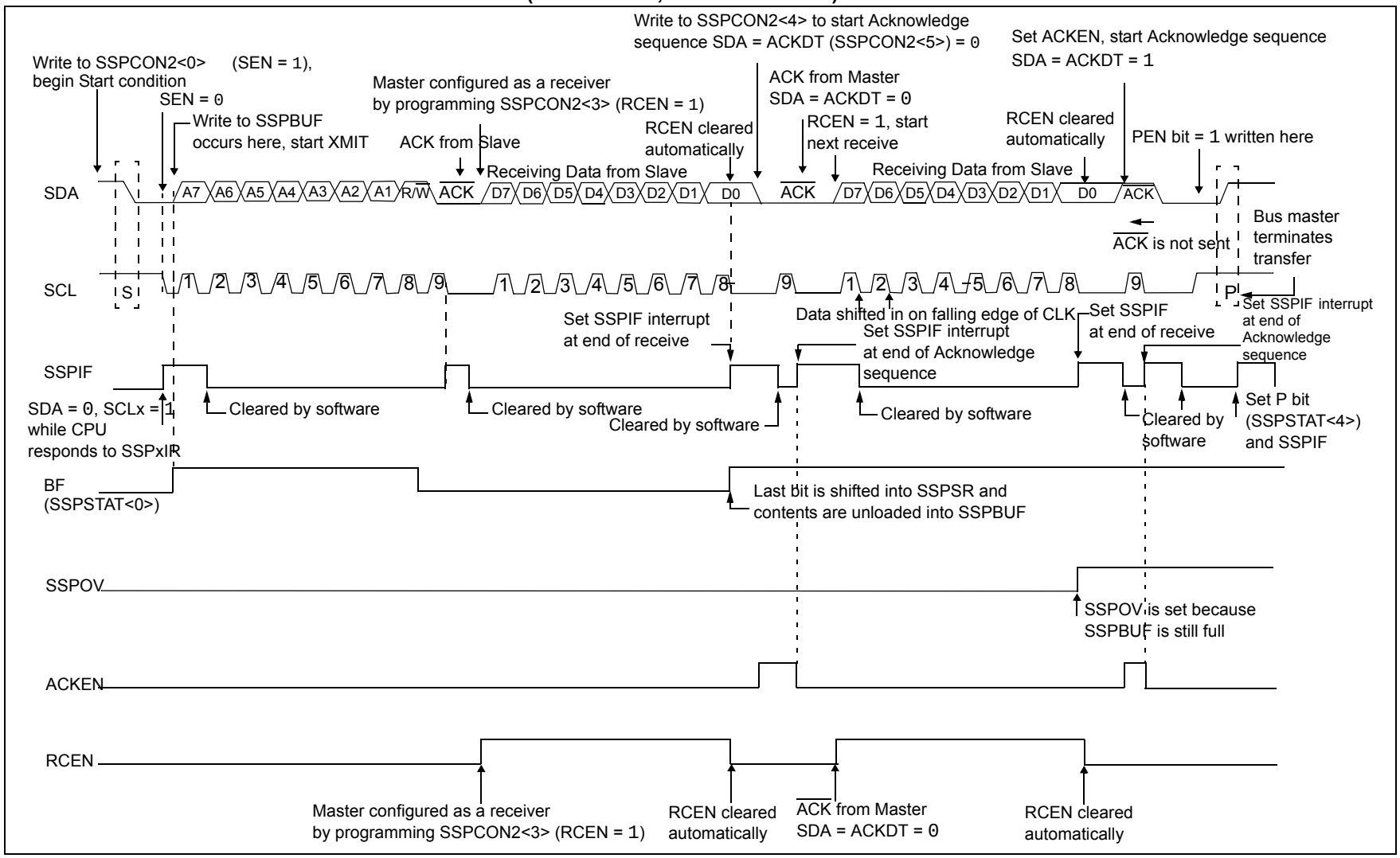

© 2015-2018 Microchip Technology Inc.

29.5.8 ACKNOWLEDGE SEQUENCE TIMING

An Acknowledge sequence is enabled by setting the Acknowledge Sequence Enable (ACKEN) bit in the SSPCON2 register. When this bit is set, the SCL pin is pulled low and the contents of the Acknowledge data bit are presented on the SDA pin. If the user wishes to generate an Acknowledge, then the ACKDT bit should be cleared. If not, the user should set the ACKDT bit before starting an Acknowledge sequence. The Baud Rate Generator then counts for one rollover period (T_{BRG}) and the SCL pin is deasserted (pulled high). When the SCL pin is sampled high (clock arbitration), the Baud Rate Generator counts for T_{BRG}. The SCL pin is then pulled low. Following this, the ACKEN bit is automatically cleared, the Baud Rate Generator is turned off and the MSSP module then goes into Idle mode (Figure 29-22).

29.5.8.1 WCOL Status Flag

If the user writes the SSPBUF when an Acknowledge sequence is in progress, WCOL is set and the contents of the buffer are unchanged (the write does not occur).

29.5.9 STOP CONDITION TIMING

A Stop bit is asserted on the SDA pin at the end of a receive/transmit by setting the Stop Sequence Enable bit (PEN) in the SSPCON2 register. At the end of a receive/transmit, the SCL line is held low after the falling edge of the 9th clock. When the PEN bit is set, the master will assert the SDA line low. When the SDA line is sampled low, the Baud Rate Generator is reloaded and counts down to '0'. When the Baud Rate Generator times out, the SCL pin will be brought high and then, one T_{BRG} (Baud Rate Generator rollover count) later, the SDA pin is deasserted. When the SDA pin is sampled high while SCL is high, the P bit in the SSPSTAT register, is set. A T_{BRG} later, the PEN bit is cleared and the SSPIF bit is set (Figure 29-23).

29.5.9.1 WCOL Status Flag

If the user writes the SSPBUF when a Stop sequence is in progress, the WCOL bit is set and the contents of the buffer are unchanged (the write does not occur).

FIGURE 29-22: ACKNOWLEDGE SEQUENCE WAVEFORM

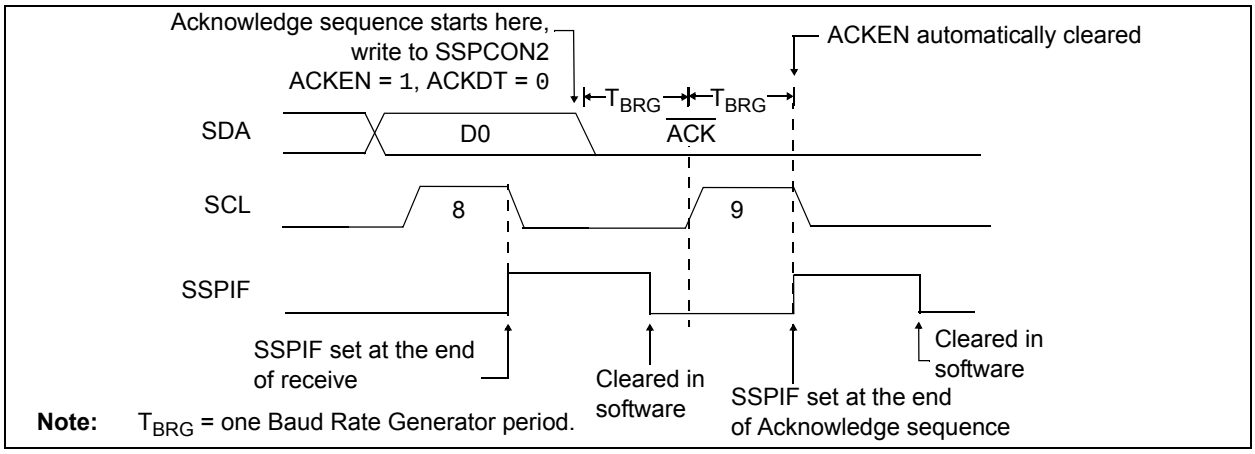

FIGURE 29-23: STOP CONDITION RECEIVE OR TRANSMIT MODE

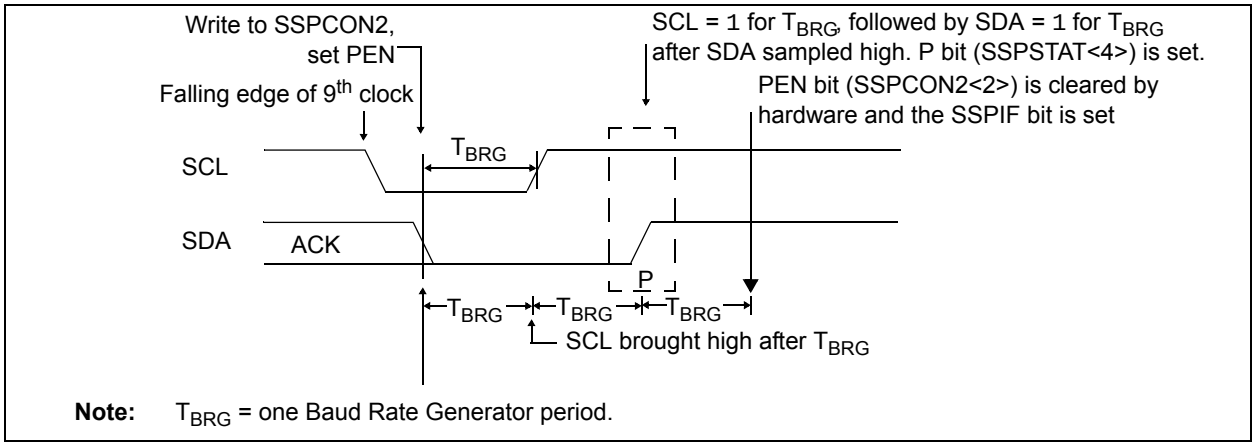

29.5.10 SLEEP OPERATION

While in Sleep mode, the I^{2}C slave module can receive addresses or data and, when an address match or complete byte transfer occurs, wake the processor from Sleep (if the MSSP interrupt is enabled).

29.5.11 EFFECTS OF A RESET

A Reset disables the MSSP module and terminates the current transfer.

29.5.12 MULTI-MASTER MODE

In Multi-Master mode, the interrupt generation on the detection of the Start and Stop conditions allows the determination of when the bus is free. The Stop (P) and Start (S) bits are cleared from a Reset or when the MSSPx module is disabled. Control of the I^{2}C bus may be taken when the P bit in the SSPSTAT register is set or the bus is idle, with both the S and P bits clear. When the bus is busy, enabling the SSP interrupt generates the interrupt when the Stop condition occurs.

In multi-master operation, the SDA line must be monitored for arbitration to see if the signal level is the expected output level. This check is performed by hardware with the result placed in the BCLIF bit.

The states where arbitration can be lost are:

- Address Transfer
- Data Transfer
- a Start Condition
- a Repeated Start Condition
- an Acknowledge Condition

29.5.13 MULTI -MASTER COMMUNICATION, BUS COLLISION AND BUS ARBITRATION

Multi-Master mode support is achieved by bus arbitration. When the master outputs address/data bits onto the SDA pin, arbitration takes place when the master outputs a '1' on SDA by letting SDA float high, and another master asserts a '0'. When the SCL pin floats high, data should be stable. If the expected data on SDA is a '1' and the data sampled on the SDA pin is '0', a bus collision has taken place. The master sets the Bus Collision Interrupt Flag (BCLIF) and resets the I^{2}C port to its Idle state (Figure 29-24).

If a transmit was in progress when the bus collision occurred, the transmission is halted, the BF flag is cleared, the SDA and SCL lines are deasserted and the SSPBUF can be written to. When the user services the bus collision Interrupt Service Routine and if the I^{2}C bus is free, the user can resume communication by asserting a Start condition.

If a Start, Repeated Start, Stop or Acknowledge condition was in progress when the bus collision occurred, the condition is aborted, the SDA and SCL lines are deasserted and the respective control bits in the SSPCON2 register are cleared. When the user services the bus collision Interrupt Service Routine and if the I^{2}C bus is free, the user can resume communication by asserting a Start condition.

The master continues to monitor the SDA and SCL pins. If a Stop condition occurs, the SSPIF bit is set.

A write to the SSPBUF starts the transmission of data at the first data bit, regardless of where the transmitter left off when the bus collision occurred.

In Multi-Master mode, the interrupt generation on the detection of Start and Stop conditions allows the determination of when the bus is free. Control of the I^{2}C bus can be taken when the P bit is set in the SSPSTAT register, or the bus is idle and the S and P bits are cleared.

FIGURE 29-24: BUS COLLISION TIMING FOR TRANSMIT AND ACKNOWLEDGE

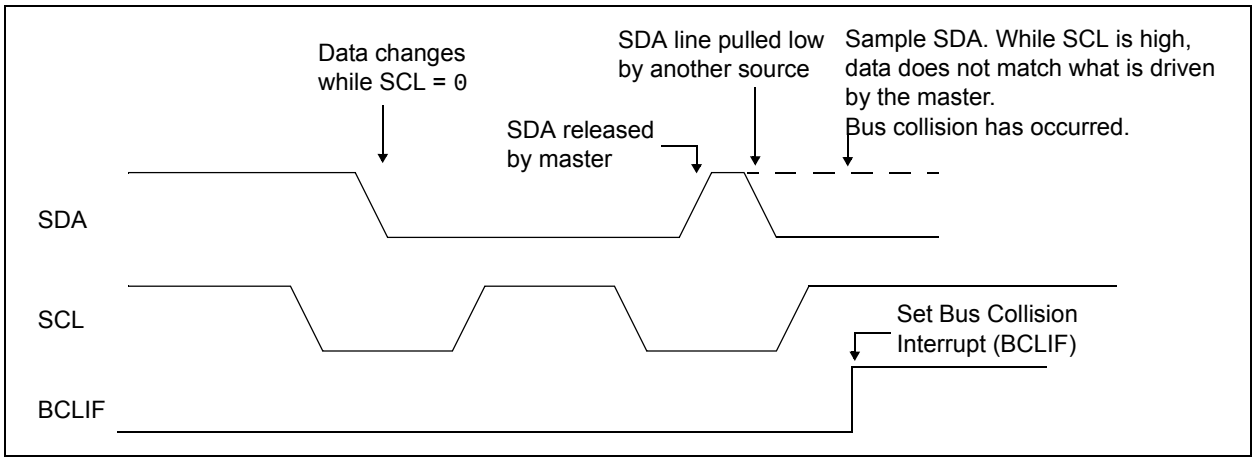

© 2015-2018 Microchip Technology Inc.

29.5.13.1 Bus Collision During a Start Condition

During a Start condition, a bus collision occurs if:

a) SDA or SCL are sampled low at the beginning of the Start condition (Figure 29-25)

b) SCL is sampled low before SDA is asserted low (Figure 29-26)

During a Start condition, both the SDA and the SCL pins are monitored.

If the SDA pin is already low or the SCL pin is already low, all of the following occur:

- the Start condition is aborted
- the BCLIF flag is set
- the MSSP module is reset to its Idle state (Figure 29-25)

The Start condition begins with the SDA and SCL pins deasserted. When the SDA pin is sampled high, the Baud Rate Generator is loaded and counts down. If the SCL pin is sampled low while SDA is high, a bus collision occurs because it is assumed that another master is attempting to drive a data '1' during the Start condition.

If the SDA pin is sampled low during this count, the BRG is reset and the SDA line is asserted early (Figure 29-27). If, however, a '1' is sampled on the SDA pin, the SDA pin is asserted low at the end of the BRG count. The Baud Rate Generator is then reloaded and counts down to zero; if the SCL pin is sampled as '0' during this time, a bus collision does not occur. At the end of the BRG count, the SCL pin is asserted low.

> **Note:** The reason for which bus collision is not a factor during a Start condition is that no two bus masters can assert a Start condition at the exact same time. Therefore, one master will always assert SDA before the other. This condition does not cause a bus collision because the two masters must be allowed to arbitrate the first address following the Start condition. If the address is the same, arbitration must be allowed to continue into the data portion, Repeated Start or Stop conditions.

FIGURE 29-25: BUS COLLISION DURING A START CONDITION (SDA ONLY)

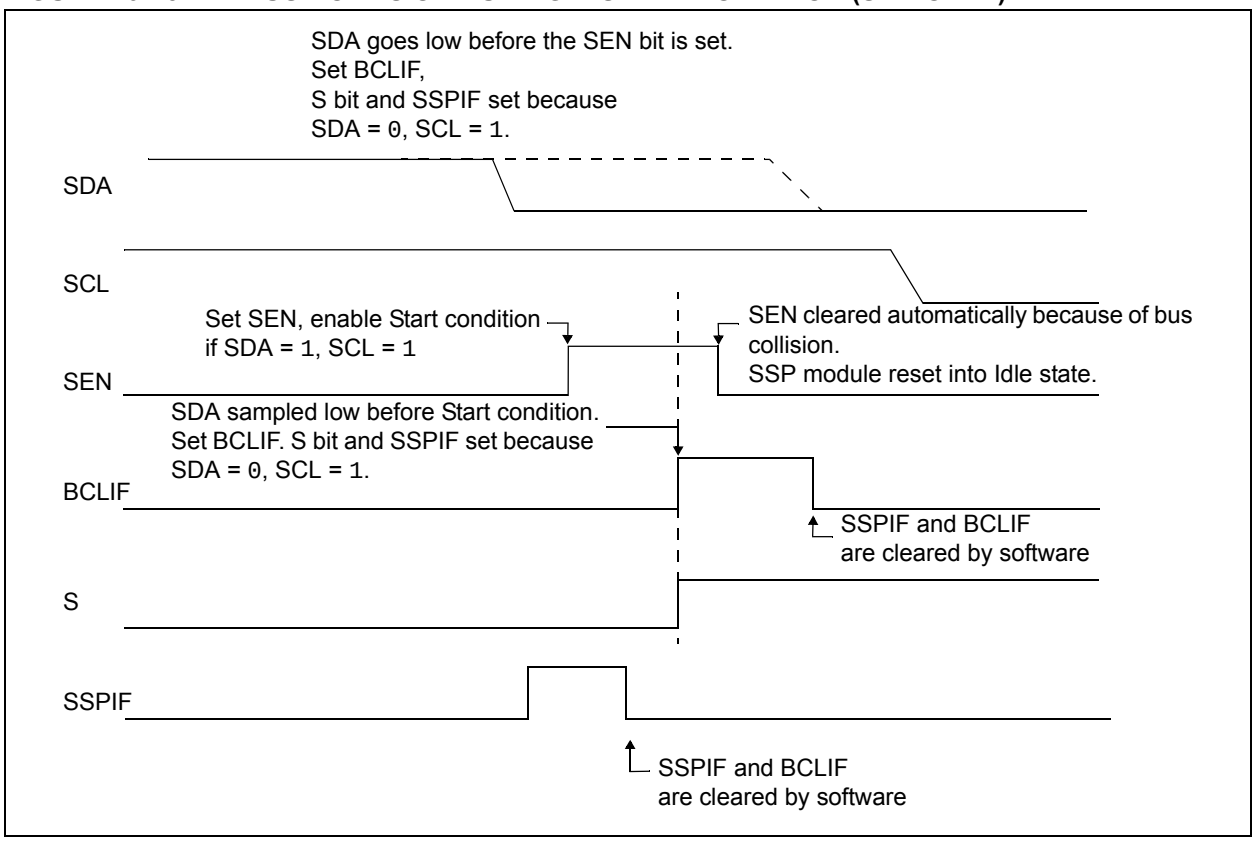

FIGURE 29-26: BUS COLLISION DURING A START CONDITION (SCL = 0)

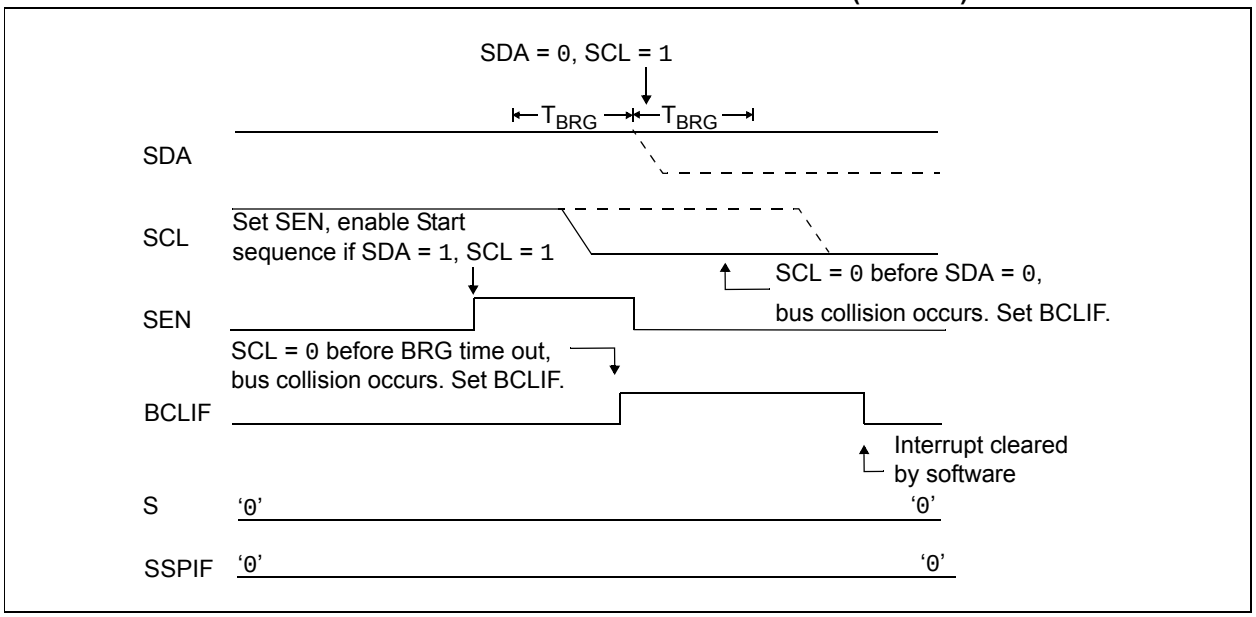

FIGURE 29-27: BRG RESET DUE TO SDA ARBITRATION DURING START CONDITION

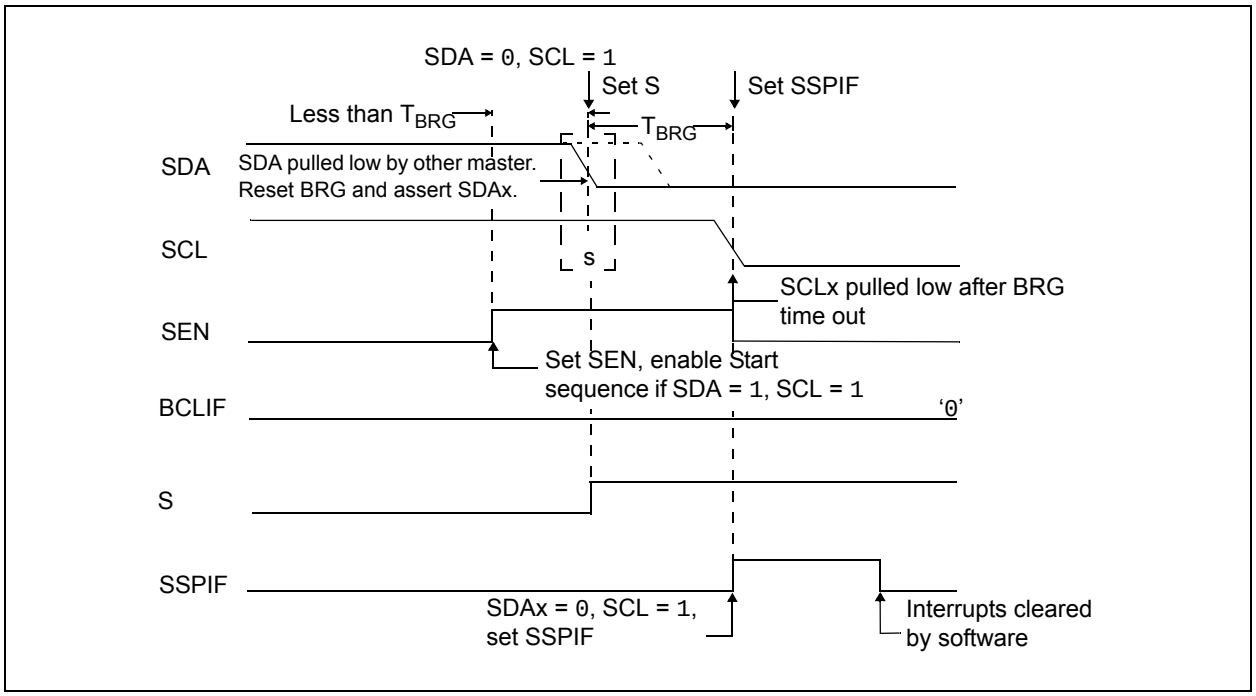

© 2015-2018 Microchip Technology Inc.

29.5.13.2 Bus Collision during a Repeated Start Condition

During a Repeated Start condition, a bus collision occurs if:

a) a low level is sampled on SDA when SCL goes from low level to high level

b) SCL goes low before SDA is asserted low, indicating that another master is attempting to transmit a data '1'

When the user releases SDA and the pin is allowed to float high, the BRG is loaded with SSPADD and counts down to zero. The SCL pin is then deasserted and, when sampled high, the SDA pin is sampled.

If SDA is low, a bus collision has occurred (i.e., another master is attempting to transmit a data '0', Figure 29-28). If SDA is sampled high, the BRG is reloaded and begins counting. If SDA goes from high to low before the BRG times out, no bus collision occurs because no two masters can assert SDA at exactly the same time.

If SCL goes from high to low before the BRG times out and SDA has not already been asserted, a bus collision occurs. In this case, another master is attempting to transmit a data '1' during the Repeated Start condition (refer to Figure 29-29).

If, at the end of the BRG time out, both SCL and SDA are still high, the SDA pin is driven low and the BRG is reloaded and begins counting. At the end of the count, regardless of the status of the SCL pin, the SCL pin is driven low and the Repeated Start condition is complete.

FIGURE 29-28: BUS COLLISION DURING A REPEATED START CONDITION (CASE 1)

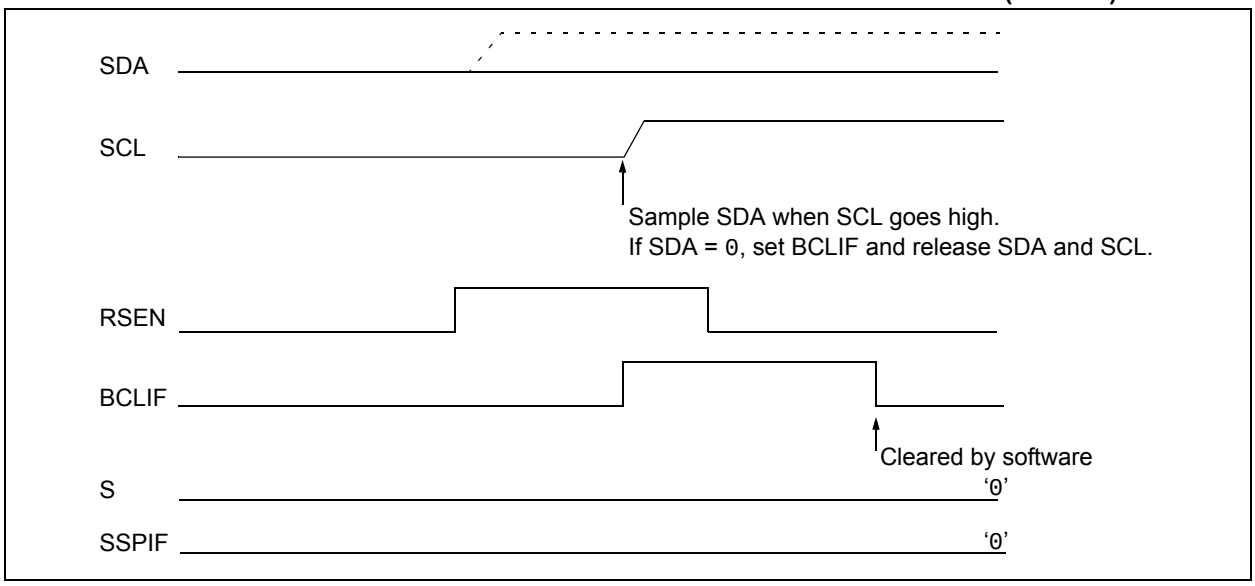

FIGURE 29-29: BUS COLLISION DURING A REPEATED START CONDITION (CASE 2)

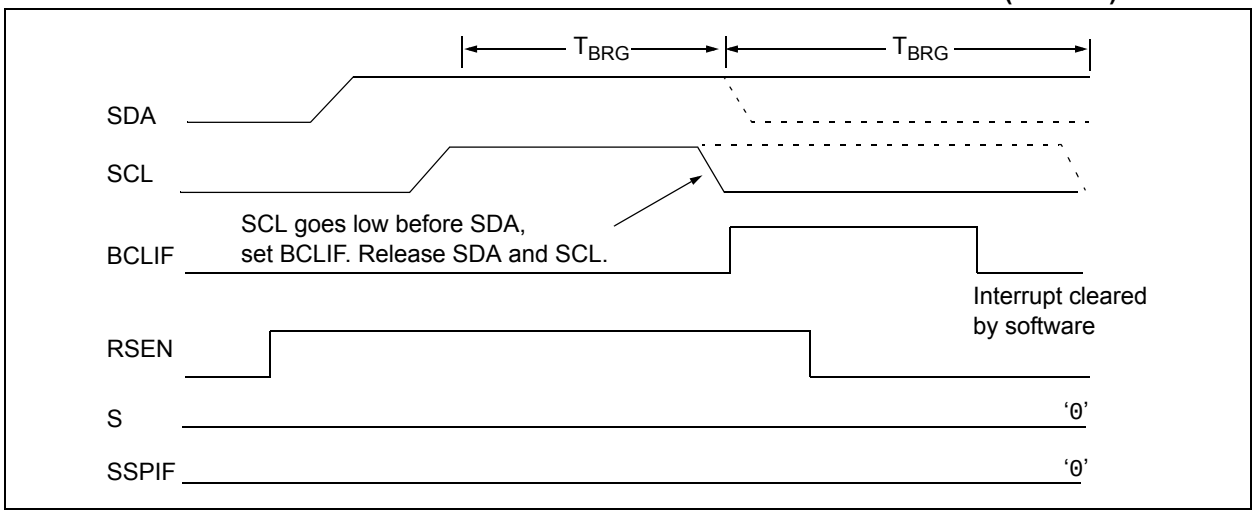

29.5.13.3 Bus Collision During a Stop Condition

Bus collision occurs during a Stop condition if:

a) after the SDA pin has been deasserted and allowed to float high, SDA is sampled low after the BRG has timed out

b) after the SCL pin is deasserted, SCL is sampled low before SDA goes high

The Stop condition begins with SDA asserted low. When SDA is sampled low, the SCL pin is allowed to float. When the pin is sampled high (clock arbitration), the Baud Rate Generator is loaded with SSPADD and counts down to 0. After the BRG times out, SDA is sampled. If SDA is sampled low, a bus collision has occurred. This is due to another master attempting to drive a data '0' (Figure 29-30). If the SCL pin is sampled low before SDA is allowed to float high, a bus collision occurs. This is another case of another master attempting to drive a data '0' (Figure 29-31).

FIGURE 29-30: BUS COLLISION DURING A STOP CONDITION (CASE 1)

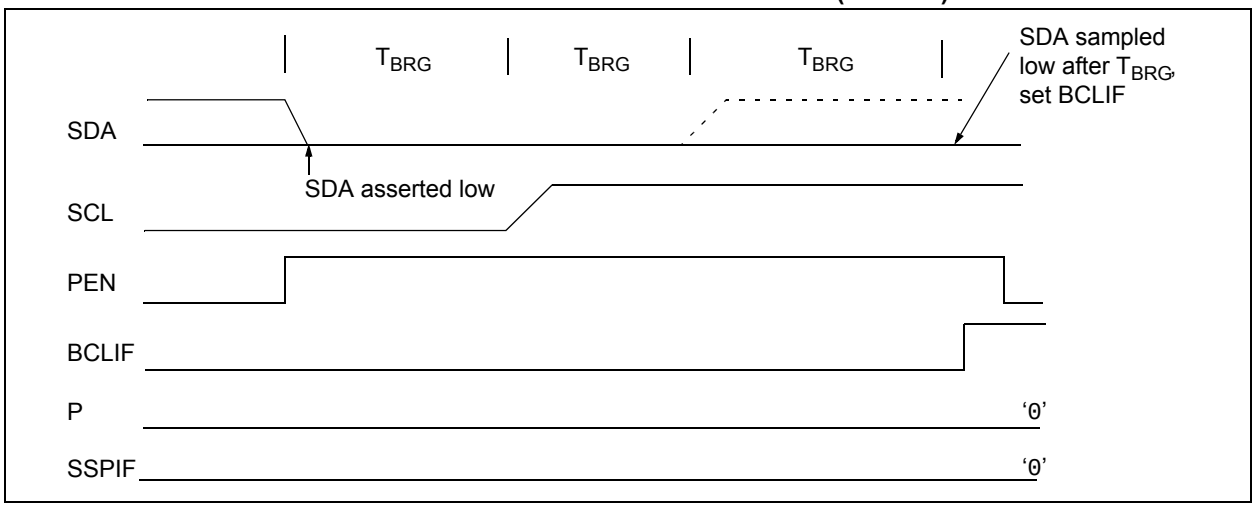

FIGURE 29-31: BUS COLLISION DURING A STOP CONDITION (CASE 2)

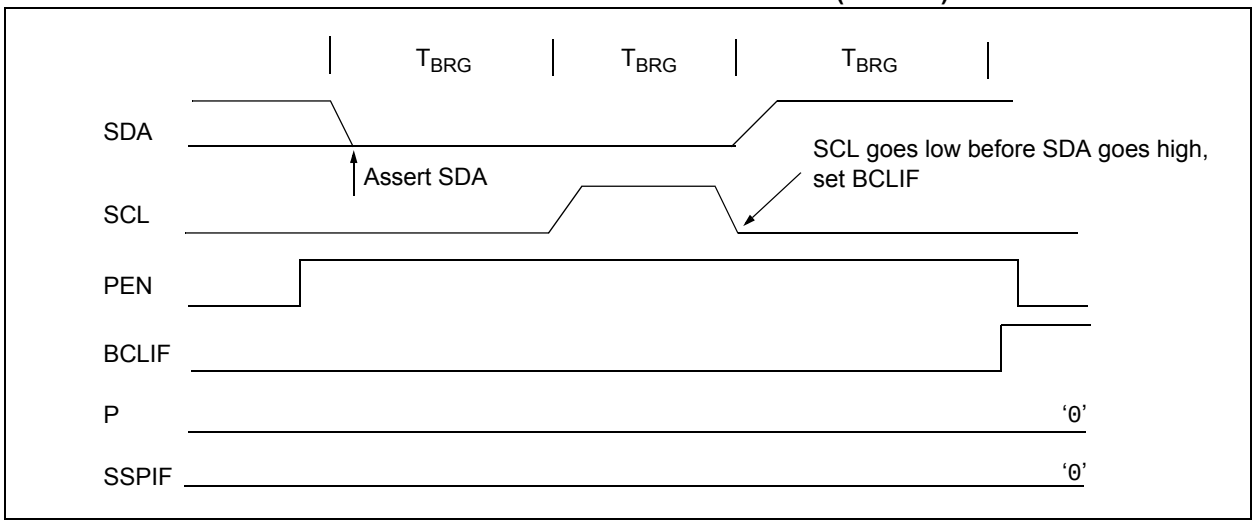

© 2015-2018 Microchip Technology Inc.

TABLE 29-2: SUMMARY OF REGISTERS ASSOCIATED WITH I²C OPERATION

Name	Bit 7	Bit 6	Bit 5	Bit 4	Bit 3	Bit 2	Bit 1	Bit 0	Reset Values on Page:
INTCON	GIE	PEIE	T0IE	INTE	IOCE	T0IF	INTF	IOCF	107
PIE1	TXIE	RCIE	BCLIE	SSPIE	CC2IE	CC1IE	TMR2IE	TMR1IE	108
PIR1	TXIF	RCIF	BCLIF	SSPIF	CC2IF	CC1IF	TMR2IF	TMR1IF	110
TRISGPA	TRISA7	TRISA6	TRISA5	—	TRISA3	TRISA2	TRISA1	TRISA0	127
TRISGPB	TRISB7	TRISB6	TRISB5	TRISB4	—	—	TRISB1	TRISB0	131
SSPADD	ADD7	ADD6	ADD5	ADD4	ADD3	ADD2	ADD1	ADD0	208
SSPBUF	Synchronous Serial Port Receive Buffer/Transmit Register								167*
SSPCON1	WCOL	SSPOV	SSPEN	CKP	SSPM3	SSPM2	SSPM1	SSPM0	204
SSPCON2	GCEN	ACKSTAT	ACKDT	ACKEN	RCEN	PEN	RSEN	SEN	206
SSPCON3	ACKTIM	PCIE	SCIE	BOEN	SDAHT	SBCDE	AHEN	DHEN	207
SSPMSK1	MSK7	MSK6	MSK5	MSK4	MSK3	MSK2	MSK1	MSK0	208
SSPSTAT	SMP	CKE	D/$\overline{A}$	P	S	R/$\overline{W}$	UA	BF	203
SSPMSK2	MSK27	MSK26	MSK25	MSK24	MSK23	MSK22	MSK21	MSK20	209
SSPADD2	ADD27	ADD26	ADD25	ADD24	ADD23	ADD22	ADD21	ADD20	209

Legend: — = unimplemented, read as '0'. Shaded cells are not used by the MSSP module in I²C mode.

* Page provides register information.

29.6 Baud Rate Generator

The MSSP module has a Baud Rate Generator available for clock generation in the I^{2}C Master mode. The Baud Rate Generator (BRG) reload value is placed in the SSPADD register. When a write occurs to SSPBUF, the Baud Rate Generator will automatically begin counting down.

Once the given operation is complete, the internal clock automatically stops counting and the clock pin remains in its last state.

An internal signal "Reload" in Figure 29-32 triggers the value from SSPADD to be loaded into the BRG counter. This occurs twice for each oscillation of the module clock line. The logic dictating when the reload signal is asserted depends on the mode the MSSP is being operated in.

Table 29-3 demonstrates clock rates based on instruction cycles and the BRG value loaded into SSPADD.

EQUATION 29-1:

$$F_{CLOCK} = \frac{F_{OSC}}{(SSPADD + 1)(4)}$$

FIGURE 29-32: BAUD RATE GENERATOR BLOCK DIAGRAM

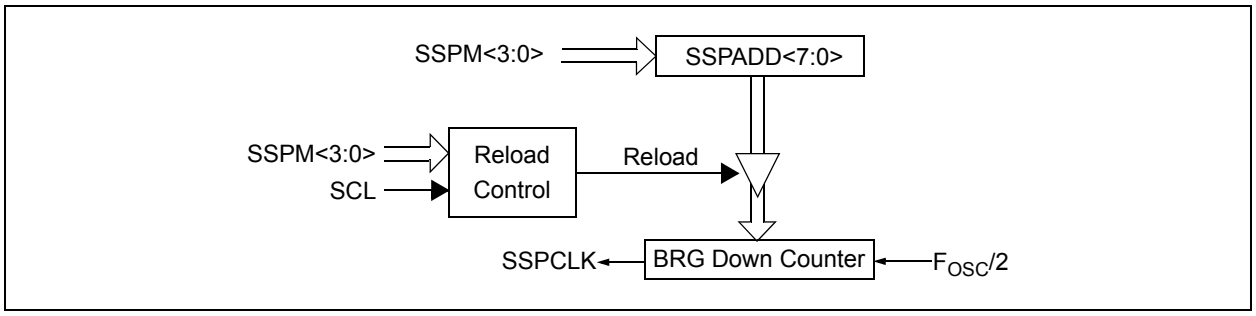

Note: Values of 0x00, 0x01 and 0x02 are not valid for SSPADD when used as a Baud Rate Generator for I^{2}C. This is an implementation limitation.

TABLE 29-3: MSSP CLOCK RATE W/BRG

F_{OSC}	F_{CY}	BRG Value	F_{CLOCK} (2 rollovers of BRG)
8 MHz	2 MHz	04h	400 kHz (1)
8 MHz	2 MHz	0Bh	166 kHz
8 MHz	2 MHz	13h	100 kHz

Note 1: The I^{2}C interface does not conform to the 400 kHz I^{2}C specification (which applies to rates greater than 100 kHz) in all details, but may be used with care where higher rates are required by the application.

© 2015-2018 Microchip Technology Inc.

REGISTER 29-1: SSPSTAT: SSP STATUS REGISTER

R/W-0	R/W-0	R-0	R-0	R-0	R-0	R-0	R-0
SMP	CKE	D/$\overline{A}$	P	S	R/$\overline{W}$	UA	BF
bit 7							bit 0

Legend:		
R = Readable bit	W = Writable bit	U = Unimplemented bit, read as ‘0’
u = Bit is unchanged	x = Bit is unknown	-n = Value at POR
‘1’ = Bit is set	‘0’ = Bit is cleared	

bit 7 **SMP:** Data Input Sample bit
1 = Slew rate control disabled for standard-speed mode (100 kHz and 1 MHz)
0 = Slew rate control enabled for high-speed mode (400 kHz)

bit 6 **CKE:** Clock Edge Select bit
1 = Enable input logic so that thresholds are compliant with SM bus specification
0 = Disable SM bus specific inputs

bit 5 **D/$\overline{A}$:** Data/$\overline{\text{Address}}$ bit
1 = Indicates that the last byte received or transmitted was data
0 = Indicates that the last byte received or transmitted was address

bit 4 **P:** Stop bit
(This bit is cleared when the MSSP module is disabled, SSPEN is cleared.)
1 = Indicates that a Stop bit has been detected last (this bit is ‘0’ on Reset)
0 = Stop bit was not detected last

bit 3 **S:** Start bit
(This bit is cleared when the MSSP module is disabled, SSPEN is cleared.)
1 = Indicates that a Start bit has been detected last (this bit is ‘0’ on Reset)
0 = Start bit was not detected last

bit 2 **R/$\overline{W}$:** Read/$\overline{\text{Write}}$ bit information
This bit holds the R/$\overline{W}$ bit information following the last address match. This bit is only valid from the address match to the next Start bit, Stop bit, or not $\overline{\text{ACK}}$ bit
In I^2C Slave mode:
1 = Read
0 = Write
In I^2C Master mode:
1 = Transmit is in progress
0 = Transmit is not in progress
OR-ing this bit with SEN, RSEN, PEN, RCEN or ACKEN will indicate if the MSSP is in Idle mode

bit 1 **UA:** Update Address bit (10-bit I^2C mode only)
1 = Indicates that the user needs to update the address in the SSPADD register
0 = Address does not need to be updated

bit 0 **BF:** Buffer Full status bit
Receive:
1 = Receive complete, SSPBUF is full
0 = Receive not complete, SSPBUF is empty
Transmit:
1 = Data transmit in progress (does not include the ACK and Stop bits), SSPBUF is full
0 = Data transmit complete (does not include the ACK and Stop bits), SSPBUF is empty

REGISTER 29-2: SSPCON1:SSP CONTROL REGISTER 1

R/C/HS-0	R/C/HS-0	R/W-0	R/W-0	R/W-0	R/W-0	R/W-0	R/W-0
WCOL	SSPOV	SSPEN	CKP	SSPM<3:0>			
bit 7							bit 0

Legend:			
R = Readable bit	W = Writable bit	U = Unimplemented bit, read as ‘0’	
u = Bit is unchanged	x = Bit is unknown	-n = Value at POR	
‘1’ = Bit is set	‘0’ = Bit is cleared	HS = Bit is set by hardware	C = User cleared

bit 7 **WCOL:** Write Collision Detect bit

Master mode:

1 = A write to the SSPBUF register was attempted while the I^2C conditions were not valid for a transmission to be started

0 = No collision

Slave mode:

1 = The SSPBUF register is written while it is still transmitting the previous word (must be cleared in software)

0 = No collision

bit 6 **SSPOV:** Receive Overflow Indicator bit (1)

1 = A byte is received while the SSPBUF register is still holding the previous byte. SSPOV is a “don’t care” in Transmit mode (must be cleared in software)

0 = No overflow

bit 5 **SSPEN:** Synchronous Serial Port Enable bit

In both modes, when enabled, these pins must be properly configured as input or output

1 = Enables the serial port and configures the SDA and SCL pins as the source of the serial port pins (2)

0 = Disables serial port and configures these pins as I/O port pins

bit 4 **CKP:** Clock Polarity Select bit

In I^2C Slave mode:

SCL release control

1 = Enable clock

0 = Holds clock low (clock stretch). (Used to ensure data setup time)

In I^2C Master mode:

Unused in this mode

Note 1: In Master mode, the overflow bit is not set since each new reception (and transmission) is initiated by writing to the SSPBUF register.

2: When enabled, the SDA and SCL pins must be configured as inputs.

3: SSPADD values of 0, 1 or 2 are not supported for I^2C mode.

© 2015-2018 Microchip Technology Inc.

REGISTER 29-2: SSPCON1:SSP CONTROL REGISTER 1 (CONTINUED)

bit 3-0 **SSPM<3:0>:** Synchronous Serial Port Mode Select bits

0000 = Reserved
0001 = Reserved
0010 = Reserved
0011 = Reserved
0100 = Reserved
0101 = Reserved
0110 = I^2C Slave mode, 7-bit address
0111 = I^2C Slave mode, 10-bit address
1000 = I^2C Master mode, clock = $F_{OSC}/(4 * (SSPADD+1))$ (3)
1001 = Reserved
1010 = Reserved
1011 = I^2C Firmware-Controlled Master mode (Slave idle)
1100 = Reserved
1101 = Reserved
1110 = I^2C Slave mode, 7-bit address with Start and Stop bit interrupts enabled
1111 = I^2C Slave mode, 10-bit address with Start and Stop bit interrupts enabled

Note 1: In Master mode, the overflow bit is not set since each new reception (and transmission) is initiated by writing to the SSPBUF register.

2: When enabled, the SDA and SCL pins must be configured as inputs.

3: SSPADD values of 0, 1 or 2 are not supported for I^2C mode.

REGISTER 29-3: SSPCON2: SSP CONTROL REGISTER 2

R/W-0/0	R-0/0	R/W-0/0	R/S/HS-0/0	R/S/HS-0/0	R/S/HS-0/0	R/S/HS-0/0	R/W/HS-0/0
GCEN	ACKSTAT	ACKDT	ACKEN (1)	RCEN (1)	PEN (1)	RSEN (1)	SEN (1)
bit 7							bit 0

Legend:		
R = Readable bit	W = Writable bit	U = Unimplemented bit, read as ‘0’
u = Bit is unchanged	x = Bit is unknown	-n/n = Value at POR and BOR/Value at all other Resets
‘1’ = Bit is set	‘0’ = Bit is cleared	HS = Bit is set by hardware S = User set

bit 7 **GCEN:** General Call Enable bit (in I^2C Slave mode only)
1 = Enable interrupt when a general call address (0x00 or 00h) is received in the SSPSR register
0 = General call address disabled

bit 6 **ACKSTAT:** Acknowledge Status bit (in I^2C mode only)
1 = Acknowledge was not received
0 = Acknowledge was received

bit 5 **ACKDT:** Acknowledge Data bit (in I^2C mode only)
In Receive mode:
Value transmitted when the user initiates an Acknowledge sequence at the end of a receive
1 = Not Acknowledge
0 = Acknowledge

bit 4 **ACKEN:** Acknowledge Sequence Enable bit (in I^2C Master mode only)
In Master Receive mode:
1 = Initiate Acknowledge sequence on SDA and SCL pins and transmit ACKDT data bit. Automatically cleared by hardware
0 = Acknowledge sequence idle

bit 3 **RCEN:** Receive Enable bit (in I^2C Master mode only)
1 = Enables Receive mode for I^2C
0 = Receive idle

bit 2 **PEN:** Stop Condition Enable bit (in I^2C Master mode only)
SCK Release Control:
1 = Initiate Stop condition on SDA and SCL pins. Automatically cleared by hardware
0 = Stop condition idle

bit 1 **RSEN:** Repeated Start Condition Enabled bit (in I^2C Master mode only)
1 = Initiate Repeated Start condition on SDA and SCL pins. Automatically cleared by hardware
0 = Repeated Start condition idle

bit 0 **SEN:** Start Condition Enabled bit (in I^2C Master mode only)
In Master mode:
1 = Initiate Start condition on SDA and SCL pins. Automatically cleared by hardware
0 = Start condition idle
In Slave mode:
1 = Clock stretching is enabled for both Slave Transmit and Slave Receive (stretch enabled)
0 = Clock stretching is disabled

Note 1: If the I^2C module is not in Idle mode, this bit may not be set (no spooling) and the SSPBUF may not be written (or writes to the SSPBUF are disabled).

© 2015-2018 Microchip Technology Inc.

REGISTER 29-4: SSPCON3: SSP CONTROL REGISTER 3

R-0/0	R/W-0/0	R/W-0/0	R/W-0/0	R/W-0/0	R/W-0/0	R/W-0/0	R/W-0/0
ACKTIM	PCIE	SCIE	BOEN	SDAHT	SBCDE	AHEN	DHEN
bit 7							bit 0

Legend:		
R = Readable bit	W = Writable bit	U = Unimplemented bit, read as ‘0’
u = Bit is unchanged	x = Bit is unknown	-n/n = Value at POR and BOR/Value at all other Resets
‘1’ = Bit is set	‘0’ = Bit is cleared	

bit 7 **ACKTIM:** Acknowledge Time status bit (I^2C mode only) (1)
`1` = Indicates the I^2C bus is in an Acknowledge sequence, set on 8th falling edge of SCL clock
`0` = Not an Acknowledge sequence, cleared on 9th rising edge of SCL clock

bit 6 **PCIE**: Stop Condition Interrupt Enable bit (I^2C mode only)
`1` = Enable interrupt on detection of Stop condition
`0` = Stop detection interrupts are disabled (2)

bit 5 **SCIE**: Start Condition Interrupt Enable bit (I^2C mode only)
`1` = Enable interrupt on detection of Start or Restart conditions
`0` = Start detection interrupts are disabled (2)

bit 4 **BOEN:** Buffer Overwrite Enable bit
In I^2C Master mode:
This bit is ignored.
In I^2C Slave mode:
`1` = SSPBUF is updated and $\overline{ACK}$ is generated for a received address/data byte, ignoring the state of the SSPOV bit only if the BF bit = `0`.
`0` = SSPBUF is only updated when SSPOV is clear.

bit 3 **SDAHT:** SDA Hold Time Selection bit
`1` = Minimum of 300 ns hold time on SDA after the falling edge of SCL
`0` = Minimum of 100 ns hold time on SDA after the falling edge of SCL

bit 2 **SBCDE:** Slave Mode Bus Collision Detect Enable bit (I^2C Slave mode only)
If, on the rising edge of SCL, SDA is sampled low when the module outputs a high state, the BCLIF bit in the PIR1 register is set and bus goes idle.
`1` = Enable slave bus collision interrupts
`0` = Slave bus collision interrupts are disabled

bit 1 **AHEN:** Address Hold Enable bit (I^2C Slave mode only)
`1` = Following the 8th falling edge of SCL for a matching received address byte; CKP bit in the SSPCON1 register is cleared and the SCL is held low
`0` = Address holding is disabled

bit 0 **DHEN:** Data Hold Enable bit (I^2C Slave mode only)
`1` = Following the 8th falling edge of SCL for a received data byte; slave hardware clears the CKP bit in the SSPCON1 register and SCL is held low
`0` = Data holding is disabled

Note 1: The ACKTIM status bit is only active when the AHEN bit or DHEN bit is set.
2: This bit has no effect in Slave modes where Start and Stop condition detection is explicitly listed as enabled.

REGISTER 29-5: SSPMSK1: SSP MASK REGISTER 1

R/W-1	R/W-1	R/W-1	R/W-1	R/W-1	R/W-1	R/W-1	R/W-1
MSK<7:1>							MSK<0>
bit 7							bit 0

Legend:		
R = Readable bit	W = Writable bit	U = Unimplemented bit, read as ‘0’
u = Bit is unchanged	x = Bit is unknown	-n = Value at POR
‘1’ = Bit is set	‘0’ = Bit is cleared	

bit 7-1 **MSK<7:1>:** Mask bits
`1` = The received address bit n is compared to SSPADD<n> to detect I^2C address match
`0` = The received address bit n is not used to detect I^2C address match

bit 0 **MSK<0>:** Mask bit for I^2C Slave mode, 10-bit Address
I^2C Slave mode, 10-bit address (SSPM<3:0> = `0111` or `1111`):
`1` = The received address bit 0 is compared to SSPADD<0> to detect I^2C address match
`0` = The received address bit 0 is not used to detect I^2C address match I^2C Slave mode, 7-bit address, the bit is ignored

REGISTER 29-6: SSPADD: MSSP ADDRESS AND BAUD RATE REGISTER 1

R/W-0	R/W-0	R/W-0	R/W-0	R/W-0	R/W-0	R/W-0	R/W-0
ADD<7:0>							
bit 7							bit 0

Legend:		
R = Readable bit	W = Writable bit	U = Unimplemented bit, read as ‘0’
u = Bit is unchanged	x = Bit is unknown	-n = Value at POR
‘1’ = Bit is set	‘0’ = Bit is cleared	

Master mode:

bit 7-0 **ADD<7:0>:** Baud Rate Clock Divider bits
SCL pin clock period = ((ADD<7:0> + 1) * 4)/F_{OSC}

10-Bit Slave mode — Most Significant Address byte:

bit 7-3 **Not used:** Unused for Most Significant Address byte. Bit state of this register is a “don’t care”. Bit pattern sent by master is fixed by I^2C specification and must be equal to ‘`11110`’. However, those bits are compared by hardware and are not affected by the value in this register

bit 2-1 **ADD<2:1>:** Two Most Significant bits of 10-bit address.

bit 0 **Not used:** Unused in this mode. Bit state is a “don’t care”

10-Bit Slave mode — Least Significant Address byte:

bit 7-0 **ADD<7:0>:** Eight Least Significant bits of 10-bit address

7-Bit Slave mode:

bit 7-1 **ADD<7:1>:** 7-bit address

bit 0 **Not used:** Unused in this mode. Bit state is a “don’t care”

© 2015-2018 Microchip Technology Inc.

REGISTER 29-7: SSPMSK2: SSP MASK REGISTER 2

R/W-1	R/W-1	R/W-1	R/W-1	R/W-1	R/W-1	R/W-1	R/W-1
MSK2<7:1>							MSK2<0>
bit 7							bit 0

Legend:		
R = Readable bit	W = Writable bit	U = Unimplemented bit, read as ‘0’
u = Bit is unchanged	x = Bit is unknown	-n = Value at POR
‘1’ = Bit is set	‘0’ = Bit is cleared	

bit 7-1 **MSK2<7:1>:** Mask bits
`1` = The received address bit n is compared to SSPADD2<n> to detect I^2C address match
`0` = The received address bit n is not used to detect I^2C address match

bit 0 **MSK2<0>:** Mask bit for I^2C Slave mode, 10-bit Address
I^2C Slave mode, 10-bit address (SSPM<3:0> = `0111` or `1111`):
`1` = The received address bit 0 is compared to SSPADD2<0> to detect I^2C address match
`0` = The received address bit 0 is not used to detect I^2C address match I^2C Slave mode, 7-bit address, the bit is ignored

REGISTER 29-8: SSPADD2: MSSP ADDRESS 2

R/W-0	R/W-0	R/W-0	R/W-0	R/W-0	R/W-0	R/W-0	R/W-0
ADD2<7:0>							
bit 7							bit 0

Legend:		
R = Readable bit	W = Writable bit	U = Unimplemented bit, read as ‘0’
u = Bit is unchanged	x = Bit is unknown	-n = Value at POR
‘1’ = Bit is set	‘0’ = Bit is cleared	

Master mode:

bit 7-0 **ADD2<7:0>:** Baud Rate Clock Divider bits
SCL pin clock period = ((ADD<7:0> + 1) * 4)/F_{OSC}

10-Bit Slave mode — Most Significant Address byte:

bit 7-3 **Not used:** Unused for Most Significant Address byte. Bit state of this register is a “don’t care”. Bit pattern sent by master is fixed by I^2C specification and must be equal to ‘`11110`’. However, those bits are compared by hardware and are not affected by the value in this register

bit 2-1 **ADD2<2:1>:** Two Most Significant bits of 10-bit address

bit 0 **Not used:** Unused in this mode. Bit state is a “don’t care”

10-Bit Slave mode — Least Significant Address byte:

bit 7-0 **ADD2<7:0>:** Eight Least Significant bits of 10-bit address

7-Bit Slave mode:

bit 7-1 **ADD2<7:1>:** 7-bit address

bit 0 **Not used:** Unused in this mode. Bit state is a “don’t care”

NOTES:

© 2015-2018 Microchip Technology Inc.

30.0 INSTRUCTION SET SUMMARY

The MCP19116/7 instruction set is highly orthogonal and is comprised of three basic categories:

- **Byte-oriented** operations
- **Bit-oriented** operations
- **Literal and control** operations

Each instruction is a 14-bit word divided into:

- an **opcode,** which specifies the instruction type
- one or more **operands,** which further specify the operation of the instruction.

The formats for each of the categories is presented in Figure 30-1, while the various opcode fields are summarized in Table 30-1.

Table 30-2 lists the instructions recognized by the MPASM™ assembler.

For **byte-oriented** instructions, 'f' represents a file register designator and 'd' represents a destination designator. The file register designator specifies which file register is to be used by the instruction.

The destination designator specifies where the result of the operation is to be placed. If 'd' is 0, the result is placed in the W register. If 'd' is 1, the result is placed in the file register specified in the instruction.

For **bit-oriented** instructions, 'b' represents a bit field designator, which selects the bit affected by the operation, while 'f' represents the address of the file in which the bit is located.

For **literal and control** operations, 'k' represents an 8-bit or 11-bit constant, or literal value.

One instruction cycle consists of four oscillator periods; for an oscillator frequency of 4 MHz, this gives a normal instruction execution time of 1 µs. All instructions are executed within a single instruction cycle, unless a conditional test is true or the program counter is changed as a result of an instruction. When this occurs, the execution takes two instruction cycles, with the second cycle executed as a NOP.

All instruction examples use the format '0xhh' to represent a hexadecimal number, where 'h' signifies a hexadecimal digit.

30.1 Read-Modify-Write Operations

Any instruction that specifies a file register as part of the instruction performs a Read-Modify-Write (RMW) operation. The register is read, the data is modified, and the result is stored according to either the instruction or the destination designator 'd'. A read operation is performed on a register even if the instruction writes to that register.

For example, a CLRF PORTA instruction will read PORTGPA, clear all the data bits, then write the result back to PORTGPA. This example would have the unintended consequence of clearing the condition that sets the IOCIF flag.

TABLE 30-1: OPCODE FIELD DESCRIPTIONS

Field	Description
f	Register file address (0x00 to 0x7F)
W	Working register (accumulator)
b	Bit address within an 8-bit file register
k	Literal field, constant data or label
x	Don't care location (= 0 or 1). The assembler will generate code with x = 0. It is the recommended form of use for compatibility with all Microchip Technology Inc. software tools.
d	Destination select; d = 0: store result in W, d = 1: store result in file register f. Default is d = 1.
PC	Program Counter
$\overline{TO}$	Time-Out bit
C	Carry bit
DC	Digit carry bit
Z	Zero bit
$\overline{PD}$	Power-down bit

FIGURE 30-1: GENERAL FORMAT FOR INSTRUCTIONS

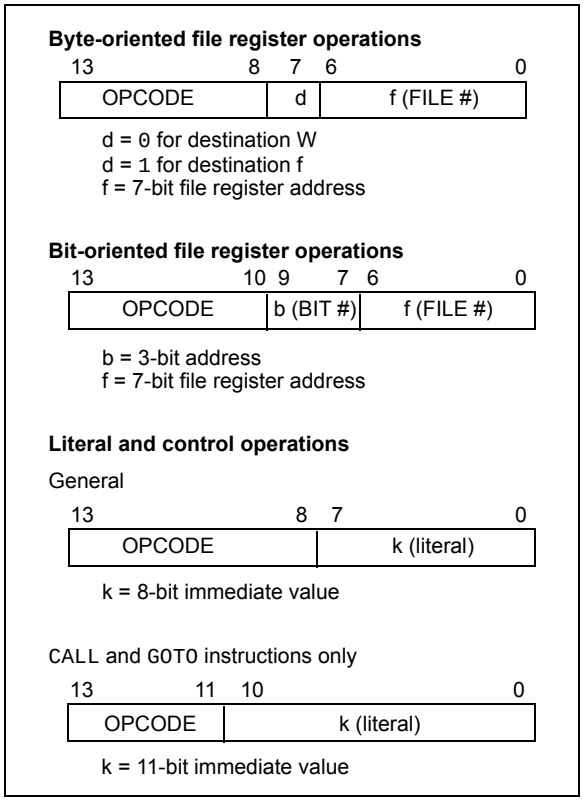

TABLE 30-2: MCP19116/7 INSTRUCTION SET

Mnemonic, Operands		Description	Cycles	14-Bit Opcode MSb			LSb	Status affected	Notes
BYTE-ORIENTED FILE REGISTER OPERATIONS									
ADDWF	f, d	Add W and f	1	00	0111	dfff	ffff	C, DC, Z	1, 2
ANDWF	f, d	AND W with f	1	00	0101	dfff	ffff	Z	1, 2
CLRF	f	Clear f	1	00	0001	lfff	ffff	Z	2
CLRW	–	Clear W	1	00	0001	0xxx	xxxx	Z	
COMF	f, d	Complement f	1	00	1001	dfff	ffff	Z	1, 2
DECF	f, d	Decrement f	1	00	0011	dfff	ffff	Z	1, 2
DECFSZ	f, d	Decrement f, Skip if 0	1(2)	00	1011	dfff	ffff		1, 2, 3
INCF	f, d	Increment f	1	00	1010	dfff	ffff	Z	1, 2
INCFSZ	f, d	Increment f, Skip if 0	1(2)	00	1111	dfff	ffff		1, 2, 3
IORWF	f, d	Inclusive OR W with f	1	00	0100	dfff	ffff	Z	1, 2
MOVF	f, d	Move f	1	00	1000	dfff	ffff	Z	1, 2
MOVWF	f	Move W to f	1	00	0000	lfff	ffff		
NOP	–	No Operation	1	00	0000	0xx0	0000		
RLF	f, d	Rotate Left f through Carry	1	00	1101	dfff	ffff	C	1, 2
RRF	f, d	Rotate Right f through Carry	1	00	1100	dfff	ffff	C	1, 2
SUBWF	f, d	Subtract W from f	1	00	0010	dfff	ffff	C, DC, Z	1, 2
SWAPF	f, d	Swap nibbles in f	1	00	1110	dfff	ffff		1, 2
XORWF	f, d	Exclusive OR W with f	1	00	0110	dfff	ffff	Z	1, 2
BIT-ORIENTED FILE REGISTER OPERATIONS									
BCF	f, b	Bit Clear f	1	01	00bb	bfff	ffff		1, 2
BSF	f, b	Bit Set f	1	01	01bb	bfff	ffff		1, 2
BTFSC	f, b	Bit Test f, Skip if Clear	1 (2)	01	10bb	bfff	ffff		3
BTFSS	f, b	Bit Test f, Skip if Set	1 (2)	01	11bb	bfff	ffff		3
LITERAL AND CONTROL OPERATIONS									
ADDLW	k	Add literal and W	1	11	111x	kkkk	kkkk	C, DC, Z	
ANDLW	k	AND literal with W	1	11	1001	kkkk	kkkk	Z	
CALL	k	Call Subroutine	2	10	0kkk	kkkk	kkkk		
CLRWDT	–	Clear Watchdog Timer	1	00	0000	0110	0100	$\overline{TO}$, $\overline{PD}$	
GOTO	k	Go to address	2	10	1kkk	kkkk	kkkk		
IORLW	k	Inclusive OR literal with W	1	11	1000	kkkk	kkkk	Z	
MOVLW	k	Move literal to W	1	11	00xx	kkkk	kkkk		
RETFIE	–	Return from interrupt	2	00	0000	0000	1001		
RETLW	k	Return with literal in W	2	11	01xx	kkkk	kkkk		
RETURN	–	Return from Subroutine	2	00	0000	0000	1000		
SLEEP	–	Go into Standby mode	1	00	0000	0110	0011	$\overline{TO}$, $\overline{PD}$	
SUBLW	k	Subtract W from literal	1	11	110x	kkkk	kkkk	C, DC, Z	
XORLW	k	Exclusive OR literal with W	1	11	1010	kkkk	kkkk	Z	

Note 1: When an I/O register is modified as a function of itself (e.g., `MOVF PORTA, 1`), the value used will be that value present on the pins themselves. For example, if the data latch is '1' for a pin configured as input and is driven low by an external device, the data will be written back with a '0'.

2: If this instruction is executed on the TMR0 register (and where applicable, d = 1), the prescaler will be cleared if assigned to the Timer0 module.

3: If the Program Counter (PC) is modified, or a conditional test is true, the instruction requires two cycles. The second cycle is executed as a `NOP`.

© 2015-2018 Microchip Technology Inc.

30.2 Instruction Descriptions

ADDLW	Add literal and W
Syntax:	[*label*] ADDLW k
Operands:	$0 \le k \le 255$
Operation:	(W) + k → (W)
Status Affected:	C, DC, Z
Description:	The contents of the W register are added to the 8-bit literal 'k' and the result is placed in the W register.

ADDWF	Add W and f
Syntax:	[*label*] ADDWF f,d
Operands:	$0 \le f \le 127$ $d \in [0,1]$
Operation:	(W) + (f) → (destination)
Status Affected:	C, DC, Z
Description:	Add the contents of the W register with register 'f'. If 'd' is '0', the result is stored in the W register. If 'd' is '1', the result is stored back in register 'f'.

ANDLW	AND literal with W
Syntax:	[*label*] ANDLW k
Operands:	$0 \le k \le 255$
Operation:	(W) .AND. (k) → (W)
Status Affected:	Z
Description:	The contents of W register are AND'ed with the 8-bit literal 'k'. The result is placed in the W register.

ANDWF	AND W with f
Syntax:	[*label*] ANDWF f,d
Operands:	$0 \le f \le 127$ $d \in [0,1]$
Operation:	(W) .AND. (f) → (destination)
Status Affected:	Z
Description:	AND the W register with register 'f'. If 'd' is '0', the result is stored in the W register. If 'd' is '1', the result is stored back in register 'f'.

BCF	Bit Clear f
Syntax:	[*label*] BCF f,b
Operands:	$0 \le f \le 127$ $0 \le b \le 7$
Operation:	0 → (f<b>)
Status Affected:	None
Description:	Bit 'b' in register 'f' is cleared.

BSF	Bit Set f
Syntax:	[*label*] BSF f,b
Operands:	$0 \le f \le 127$ $0 \le b \le 7$
Operation:	1 → (f<b>)
Status Affected:	None
Description:	Bit 'b' in register 'f' is set.

BTFSC	Bit Test f, Skip if Clear
Syntax:	[*label*] BTFSC f,b
Operands:	$0 \le f \le 127$ $0 \le b \le 7$
Operation:	skip if (f<b>) = 0
Status Affected:	None
Description:	If bit 'b' in register 'f' is '1', the next instruction is executed. If bit 'b' in register 'f' is '0', the next instruction is discarded, and a NOP is executed instead, making this a two-cycle instruction.

BTFSS	Bit Test f, Skip if Set
Syntax:	[*label*] BTFSS f,b
Operands:	$0 \le f \le 127$ $0 \le b < 7$
Operation:	skip if (f<b>) = 1
Status Affected:	None
Description:	If bit 'b' in register 'f' is '0', the next instruction is executed. If bit 'b' is '1', the next instruction is discarded and a NOP is executed instead, making this a two-cycle instruction.

CALL	Call Subroutine
Syntax:	[*label*] CALL k
Operands:	$0 \le k \le 2047$
Operation:	(PC)+ 1→ TOS, k → PC<10:0>, (PCLATH<4:3>) → PC<12:11>
Status Affected:	None
Description:	Call Subroutine. First, return address (PC + 1) is pushed onto the stack. The 11-bit immediate address is loaded into PC bits <10:0>. The upper bits of the PC are loaded from PCLATH. CALL is a two-cycle instruction.

CLRF	Clear f
Syntax:	[*label*] CLRF f
Operands:	$0 \le f \le 127$
Operation:	00h → (f) 1 → Z
Status Affected:	Z
Description:	The contents of register 'f' are cleared and the Z bit is set.

CLRW	Clear W
Syntax:	[*label*] CLRW
Operands:	None
Operation:	00h → (W) 1 → Z
Status Affected:	Z
Description:	W register is cleared. Zero (Z) bit is set.

CLRWDT	Clear Watchdog Timer
Syntax:	[*label*] CLRWDT
Operands:	None
Operation:	00h → WDT 0 → WDT prescaler, 1 → $\overline{TO}$ 1 → $\overline{PD}$
Status Affected:	$\overline{TO}$, $\overline{PD}$
Description:	CLRWDT instruction resets the Watchdog Timer. It also resets the prescaler of the WDT. Bits $\overline{TO}$ and $\overline{PD}$ in the STATUS register are set.

COMF	Complement f
Syntax:	[*label*] COMF f,d
Operands:	$0 \le f \le 127$ $d \in [0,1]$
Operation:	($\bar{f}$) → (destination)
Status Affected:	Z
Description:	The contents of register 'f' are complemented. If 'd' is '0', the result is stored in W. If 'd' is '1', the result is stored back in register 'f'.

DECF	Decrement f
Syntax:	[*label*] DECF f,d
Operands:	$0 \le f \le 127$ $d \in [0,1]$
Operation:	(f) - 1 → (destination)
Status Affected:	Z
Description:	Decrement register 'f'. If 'd' is '0', the result is stored in the W register. If 'd' is '1', the result is stored back in register 'f'.

© 2015-2018 Microchip Technology Inc.

DECFSZ	Decrement f, Skip if 0
Syntax:	[*label*] DECFSZ f,d
Operands:	$0 \le f \le 127$ $d \in [0,1]$
Operation:	(f) - 1 → (destination); skip if result = 0
Status Affected:	None
Description:	The contents of register 'f' are decremented. If 'd' is '0', the result is placed in the W register. If 'd' is '1', the result is placed back in register 'f'. If the result is '1', the next instruction is executed. If the result is '0', a NOP is executed instead, making it a two-cycle instruction.

GOTO	Unconditional Branch
Syntax:	[*label*] GOTO k
Operands:	$0 \le k \le 2047$
Operation:	k → PC<10:0> PCLATH<4:3> → PC<12:11>
Status Affected:	None
Description:	GOTO is an unconditional branch. The 11-bit immediate value is loaded into PC bits <10:0>. The upper bits of PC are loaded from PCLATH<4:3>. GOTO is a two-cycle instruction.

INCF	Increment f
Syntax:	[*label*] INCF f,d
Operands:	$0 \le f \le 127$ $d \in [0,1]$
Operation:	(f) + 1 → (destination)
Status Affected:	Z
Description:	The contents of register 'f' are incremented. If 'd' is '0', the result is placed in the W register. If 'd' is '1', the result is placed back in register 'f'.

INCFSZ	Increment f, Skip if 0
Syntax:	[*label*] INCFSZ f,d
Operands:	$0 \le f \le 127$ $d \in [0,1]$
Operation:	(f) + 1 → (destination), skip if result = 0
Status Affected:	None
Description:	The contents of register 'f' are incremented. If 'd' is '0', the result is placed in the W register. If 'd' is '1', the result is placed back in register 'f'. If the result is '1', the next instruction is executed. If the result is '0', a NOP is executed instead, making it a two-cycle instruction.

IORLW	Inclusive OR literal with W
Syntax:	[*label*] IORLW k
Operands:	$0 \le k \le 255$
Operation:	(W) .OR. k → (W)
Status Affected:	Z
Description:	The contents of the W register are OR'ed with the 8-bit literal 'k'. The result is placed in the W register.

IORWF	Inclusive OR W with f
Syntax:	[*label*] IORWF f,d
Operands:	$0 \le f \le 127$ $d \in [0,1]$
Operation:	(W) .OR. (f) → (destination)
Status Affected:	Z
Description:	Inclusive OR the W register with register 'f'. If 'd' is '0', the result is placed in the W register. If 'd' is '1', the result is placed back in register 'f'.

MOVF	Move f
Syntax:	[*label*] MOVF f,d
Operands:	$0 \le f \le 127$ $d \in [0,1]$
Operation:	(f) → (dest)
Status Affected:	Z
Description:	The contents of register 'f' are moved to a destination dependent upon the status of 'd'. If d = 0, the destination is W register. If d = 1, the destination is file register 'f' itself. d = 1 is useful to test a file register since STATUS flag Z is affected.
Words:	1
Cycles:	1
Example:	`MOVF FSR, 0` After Instruction W = value in FSR register Z = 1

MOVWF	Move W to f
Syntax:	[*label*] MOVWF f
Operands:	$0 \le f \le 127$
Operation:	(W) → (f)
Status Affected:	None
Description:	Move data from W register to register 'f'.
Words:	1
Cycles:	1
Example:	`MOVW OPTION F` Before Instruction OPTION = 0xFF W = 0x4F After Instruction OPTION = 0x4F W = 0x4F

MOVLW	Move literal to W
Syntax:	[*label*] MOVLW k
Operands:	$0 \le k \le 255$
Operation:	k → (W)
Status Affected:	None
Description:	The 8-bit literal 'k' is loaded into W register. The "don't cares" will assemble as '0's.
Words:	1
Cycles:	1
Example:	`MOVLW 0x5A` After Instruction W = 0x5A

NOP	No Operation
Syntax:	[*label*] NOP
Operands:	None
Operation:	No operation
Status Affected:	None
Description:	No operation.
Words:	1
Cycles:	1
Example:	`NOP`

© 2015-2018 Microchip Technology Inc.

RETFIE	Return from Interrupt
Syntax:	[*label*] RETFIE
Operands:	None
Operation:	TOS → PC, 1 → GIE
Status Affected:	None
Description:	Return from Interrupt. Stack is POPed and Top-of-Stack (TOS) is loaded in the PC. Interrupts are enabled by setting Global Interrupt Enable bit, GIE (INTCON<7>). This is a two-cycle instruction.
Words:	1
Cycles:	2
Example:	`RETFIE` After Interrupt PC = TOS GIE = 1

RETURN	Return from Subroutine
Syntax:	[*label*] RETURN
Operands:	None
Operation:	TOS → PC
Status Affected:	None
Description:	Return from subroutine. The stack is POPed and the Top-of-Stack (TOS) is loaded into the program counter. This is a two-cycle instruction.

RETLW	Return with literal in W
Syntax:	[*label*] RETLW k
Operands:	$0 \le k \le 255$
Operation:	k → (W); TOS → PC
Status Affected:	None
Description:	The W register is loaded with the 8-bit literal ‘k’. The program counter is loaded from the Top-of-Stack (the return address). This is a two-cycle instruction.
Words:	1
Cycles:	2

Example:	`CALL TABLE;W contains`
	`;table offset`
	`;value`
	`GOTO DONE`
	TABLE •
	•
	`ADDWF PC ;W = offset`
	`RETLW k1 ;Begin table`
	`RETLW k2 ;`
	•
	•
	•
	`RETLW kn ;End of table`
	DONE
	Before Instruction
	W = 0x07
	After Instruction
	W = value of k8

RLF	Rotate Left f through Carry
Syntax:	[*label*] RLF f,d
Operands:	$0 \le f \le 127$ $d \in [0,1]$
Operation:	See description below
Status Affected:	C
Description:	The contents of register ‘f’ are rotated one bit to the left through the Carry flag. If ‘d’ is ‘0’, the result is placed in the W register. If ‘d’ is ‘1’, the result is stored back in register ‘f’. 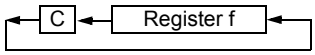
Words:	1
Cycles:	1
Example:	`RLF REG1,0` Before Instruction REG1 = 1110 0110 C = 0 After Instruction REG1 = 1110 0110 W = 1100 1100 C = 1

RRF	Rotate Right f through Carry
Syntax:	[*label*] RRF f,d
Operands:	$0 \le f \le 127$ $d \in [0,1]$
Operation:	See description below
Status Affected:	C
Description:	The contents of register 'f' are rotated one bit to the right through the Carry flag. If 'd' is '0', the result is placed in the W register. If 'd' is '1', the result is placed back in register 'f'. 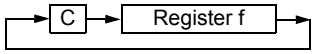

SUBWF	Subtract W from f
Syntax:	[*label*] SUBWF f,d
Operands:	$0 \le f \le 127$ $d \in [0,1]$
Operation:	(f) - (W) → (destination)
Status Affected:	C, DC, Z
Description:	Subtract (two's complement method) W register from register 'f'. If 'd' is '0', the result is stored in the W register. If 'd' is '1', the result is stored back in register 'f'.

C = 0	W > f
C = 1	W ≤ f
DC = 0	W<3:0> > f<3:0>
DC = 1	W<3:0> ≤ f<3:0>

SLEEP	Enter Sleep mode
Syntax:	[*label*] SLEEP
Operands:	None
Operation:	00h → WDT, 0 → WDT prescaler, 1 → $\overline{TO}$, 0 → $\overline{PD}$
Status Affected:	$\overline{TO}$, $\overline{PD}$
Description:	The power-down STATUS bit, $\overline{PD}$, is cleared. Time-Out STATUS bit ($\overline{TO}$) is set. Watchdog Timer and its prescaler are cleared. The processor is put into Sleep mode with the oscillator stopped.

SWAPF	Swap Nibbles in f
Syntax:	[*label*] SWAPF f,d
Operands:	$0 \le f \le 127$ $d \in [0,1]$
Operation:	(f<3:0>) → (destination<7:4>), (f<7:4>) → (destination<3:0>)
Status Affected:	None
Description:	The upper and lower nibbles of register 'f' are exchanged. If 'd' is '0', the result is placed in the W register. If 'd' is '1', the result is placed in register 'f'.

SUBLW	Subtract W from literal
Syntax:	[*label*] SUBLW k
Operands:	$0 \le k \le 255$
Operation:	k - (W) → (W)
Status Affected:	C, DC, Z
Description:	The W register is subtracted (two's complement method) from the 8-bit literal 'k'. The result is placed in the W register.

Result	Condition
C = 0	W > k
C = 1	W ≤ k
DC = 0	W<3:0> > k<3:0>
DC = 1	W<3:0> ≤ k<3:0>

XORLW	Exclusive OR literal with W
Syntax:	[*label*] XORLW k
Operands:	$0 \le k \le 255$
Operation:	(W) .XOR. k → (W)
Status Affected:	Z
Description:	The contents of the W register are XOR'ed with the 8-bit literal 'k'. The result is placed in the W register.

© 2015-2018 Microchip Technology Inc.

XORWF	Exclusive OR W with f
Syntax:	[*label*] XORWF f,d
Operands:	$0 \le f \le 127$ $d \in [0,1]$
Operation:	(W) .XOR. (f) → (destination)
Status Affected:	Z
Description:	Exclusive OR the contents of the W register with register ‘f’. If ‘d’ is ‘0’, the result is stored in the W register. If ‘d’ is ‘1’, the result is stored back in register ‘f’.

NOTES:

© 2015-2018 Microchip Technology Inc.

31.0 IN-CIRCUIT SERIAL PROGRAMMING™ (ICSP™)

ICSP allows customers to manufacture circuit boards with unprogrammed devices. Programming can be done after the assembly process, allowing the device to be programmed with the most recent firmware or a custom firmware. Five pins are needed for ICSP programming:

- ICSPCLK
- ICSPDAT
- $\overline{MCLR}$
- V_{DD}
- A_{GND}

In Program/Verify mode, the Program Memory, User IDs and the Configuration Words are programmed through serial communications. The ICSPDAT pin is a bidirectional I/O used for transferring the serial data and the ICSPCLK pin is the clock input. The device is placed into a Program/Verify mode by holding the ICSPDAT and ICSPCLK pins low while raising the $\overline{MCLR}$ pin from V_{IL} to V_{IHH}.

31.1 Common Programming Interfaces

Connection to a target device is typically done through an ICSP header. A commonly found connector on development tools is the RJ-11 in the 6P6C (6-pin, 6-connector) configuration. Refer to Figure 31-1.

FIGURE 31-1: ICD RJ-11 STYLE CONNECTOR INTERFACE

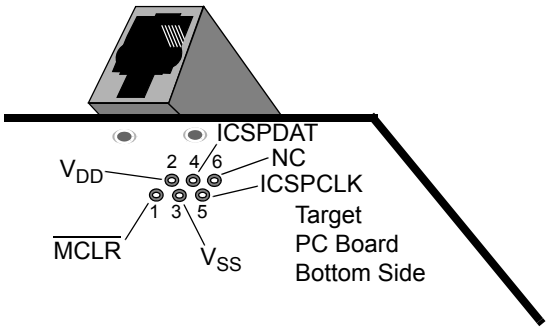

Pin Description*

1 = $\overline{MCLR}$
2 = V_{DD} Target
3 = A_{GND} (Ground)
4 = ICSPDAT
5 = ICSPCLK
6 = No Connect

* The 6-pin header (0.100" spacing) accepts 0.025" square pins.

Another connector often found in use with the PICkit™ programmers is a standard 6-pin header with 0.1 inch spacing. Refer to Figure 31-2.

FIGURE 31-2: PICkit™ STYLE CONNECTOR INTERFACE

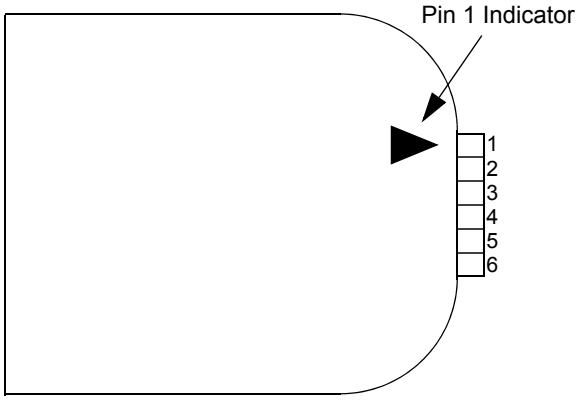

Pin Description*

1 = $\overline{MCLR}$
2 = V_{DD} Target
3 = A_{GND}
4 = ICSPDAT
5 = ICSPCLK
6 = No Connect

* The 6-pin header (0.100" spacing) accepts 0.025" square pins.

For additional interface recommendations, refer to your specific device programmer manual prior to PCB design.

It is recommended that isolation devices be used to separate the programming pins from other circuitry. The type of isolation is highly dependent on the specific application and may include devices such as resistors, diodes or even jumpers. Refer to Figure 31-3 for more information.

FIGURE 31-3: TYPICAL CONNECTION FOR ICSP™ PROGRAMMING

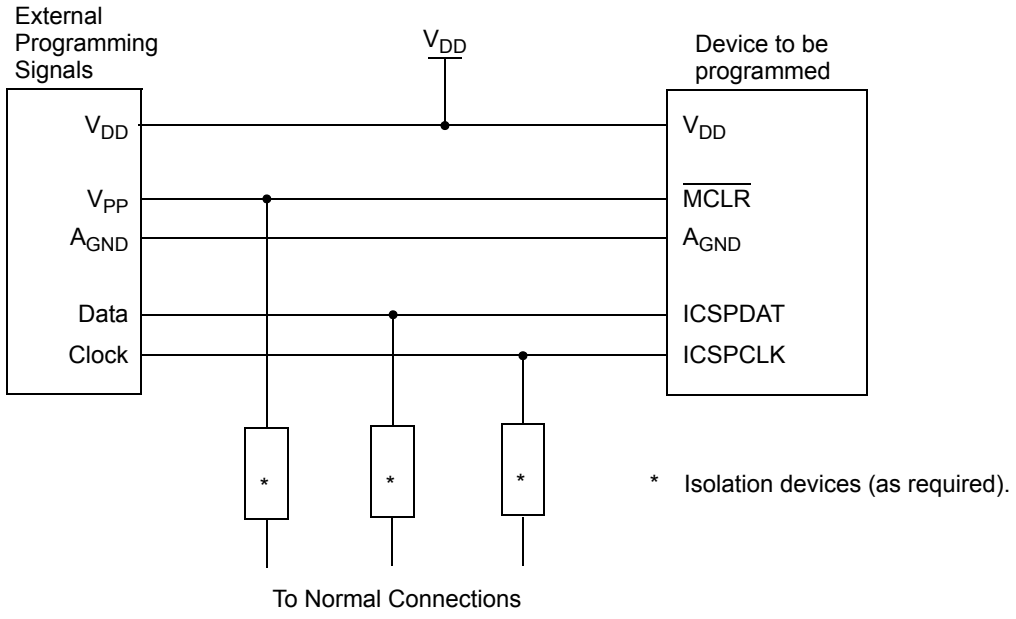

Note: If powering via back feeding V_{DD}, V_{DD} must be tied to V_{IN}.

© 2015-2018 Microchip Technology Inc.

32.0 DEVELOPMENT SUPPORT

The PIC® microcontrollers (MCU) and dsPIC® digital signal controllers (DSC) are supported with a full range of software and hardware development tools:

- Integrated Development Environment
  - MPLAB® X IDE Software
- Compilers/Assemblers/Linkers
  - MPLAB XC Compiler
  - MPASM™ Assembler
  - MPLINK™ Object Linker/ MPLIB™ Object Librarian
  - MPLAB Assembler/Linker/Librarian for Various Device Families
- Simulators
  - MPLAB X SIM Software Simulator
- Emulators
  - MPLAB REAL ICE™ In-Circuit Emulator
- In-Circuit Debuggers/Programmers
  - MPLAB ICD 3
  - PICkit™ 3
- Device Programmers
  - MPLAB PM3 Device Programmer
- Low-Cost Demonstration/Development Boards, Evaluation Kits and Starter Kits
- Third-party development tools

32.1 MPLAB X Integrated Development Environment Software

The MPLAB X IDE is a single, unified graphical user interface for Microchip and third-party software, and hardware development tool that runs on Windows®, Linux and Mac OS® X. Based on the NetBeans IDE, MPLAB X IDE is an entirely new IDE with a host of free software components and plug-ins for high-performance application development and debugging. Moving between tools and upgrading from software simulators to hardware debugging and programming tools is simple with the seamless user interface.

With complete project management, visual call graphs, a configurable watch window and a feature-rich editor that includes code completion and context menus, MPLAB X IDE is flexible and friendly enough for new users. With the ability to support multiple tools on multiple projects with simultaneous debugging, MPLAB X IDE is also suitable for the needs of experienced users.

Feature-Rich Editor:

- Color syntax highlighting
- Smart code completion makes suggestions and provides hints as you type
- Automatic code formatting based on user-defined rules
- Live parsing

User-Friendly, Customizable Interface:

- Fully customizable interface: toolbars, toolbar buttons, windows, window placement, etc.
- Call graph window

Project-Based Workspaces:

- Multiple projects
- Multiple tools
- Multiple configurations
- Simultaneous debugging sessions

File History and Bug Tracking:

- Local file history feature
- Built-in support for Bugzilla issue tracker

32.2 MPLAB XC Compilers

The MPLAB XC Compilers are complete ANSI C compilers for all of Microchip's 8-, 16- and 32-bit MCU and DSC devices. These compilers provide powerful integration capabilities, superior code optimization and ease of use. MPLAB XC Compilers run on Windows, Linux or MAC OS X.

For easy source level debugging, the compilers provide debug information that is optimized to the MPLAB X IDE.

The free MPLAB XC Compiler editions support all devices and commands, with no time or memory restrictions, and offer sufficient code optimization for most applications.

MPLAB XC Compilers include an assembler, linker and utilities. The assembler generates relocatable object files that can then be archived or linked with other relocatable object files and archives to create an executable file. MPLAB XC Compiler uses the assembler to produce its object file. Notable features of the assembler include:

- Support for the entire device instruction set
- Support for fixed-point and floating-point data
- Command-line interface
- Rich directive set
- Flexible macro language
- MPLAB X IDE compatibility

32.3 MPASM Assembler

The MPASM Assembler is a full-featured, universal macro assembler for PIC10/12/16/18 MCUs.

The MPASM Assembler generates relocatable object files for the MPLINK Object Linker, Intel® standard HEX files, MAP files to detail memory usage and symbol reference, absolute LST files that contain source lines and generated machine code, and COFF files for debugging.

The MPASM Assembler features include:

- Integration into MPLAB X IDE projects
- User-defined macros to streamline assembly code
- Conditional assembly for multipurpose source files
- Directives that allow complete control over the assembly process

32.4 MPLINK Object Linker/ MPLIB Object Librarian

The MPLINK Object Linker combines relocatable objects created by the MPASM Assembler. It can link relocatable objects from precompiled libraries, using directives from a linker script.

The MPLIB Object Librarian manages the creation and modification of library files of precompiled code. When a routine from a library is called from a source file, only the modules that contain that routine will be linked in with the application. This allows large libraries to be used efficiently in many different applications.

The object linker/library features include:

- Efficient linking of single libraries instead of many smaller files
- Enhanced code maintainability by grouping related modules together
- Flexible creation of libraries with easy module listing, replacement, deletion and extraction

32.5 MPLAB Assembler, Linker and Librarian for Various Device Families

MPLAB Assembler produces relocatable machine code from symbolic assembly language for PIC24, PIC32 and dsPIC DSC devices. MPLAB XC Compiler uses the assembler to produce its object file. The assembler generates relocatable object files that can then be archived or linked with other relocatable object files and archives to create an executable file. Notable features of the assembler include:

- Support for the entire device instruction set
- Support for fixed-point and floating-point data
- Command-line interface
- Rich directive set
- Flexible macro language
- MPLAB X IDE compatibility

© 2015-2018 Microchip Technology Inc.

32.6 MPLAB X SIM Software Simulator

The MPLAB X SIM Software Simulator allows code development in a PC-hosted environment by simulating the PIC MCUs and dsPIC DSCs on an instruction level. On any given instruction, the data areas can be examined or modified and stimuli can be applied from a comprehensive stimulus controller. Registers can be logged to files for further run-time analysis. The trace buffer and logic analyzer display extend the power of the simulator to record and track program execution, actions on I/O, most peripherals and internal registers.

The MPLAB X SIM Software Simulator fully supports symbolic debugging using the MPLAB XC Compilers, and the MPASM and MPLAB Assemblers. The software simulator offers the flexibility to develop and debug code outside of the hardware laboratory environment, making it an excellent, economical software development tool.

32.7 MPLAB REAL ICE In-Circuit Emulator System

The MPLAB REAL ICE In-Circuit Emulator System is Microchip's next generation high-speed emulator for Microchip Flash DSC and MCU devices. It debugs and programs all 8, 16 and 32-bit MCU, and DSC devices with the easy-to-use, powerful graphical user interface of the MPLAB X IDE.

The emulator is connected to the design engineer's PC using a high-speed USB 2.0 interface and is connected to the target with either a connector compatible with in-circuit debugger systems (RJ-11) or with the new high-speed, noise tolerant, Low-Voltage Differential Signal (LVDS) interconnection (CAT5).

The emulator is field upgradeable through future firmware downloads in MPLAB X IDE. MPLAB REAL ICE offers significant advantages over competitive emulators including full-speed emulation, run-time variable watches, trace analysis, complex breakpoints, logic probes, a ruggedized probe interface and long (up to three meters) interconnection cables.

32.8 MPLAB ICD 3 In-Circuit Debugger System

The MPLAB ICD 3 In-Circuit Debugger System is Microchip's most cost-effective, high-speed hardware debugger/programmer for Microchip Flash DSC and MCU devices. It debugs and programs PIC Flash microcontrollers and dsPIC DSCs with the powerful, yet easy-to-use graphical user interface of the MPLAB IDE.

The MPLAB ICD 3 In-Circuit Debugger probe is connected to the design engineer's PC using a high-speed USB 2.0 interface and is connected to the target with a connector compatible with the MPLAB ICD 2 or MPLAB REAL ICE systems (RJ-11). MPLAB ICD 3 supports all MPLAB ICD 2 headers.

32.9 PICkit 3 In-Circuit Debugger/ Programmer

The MPLAB PICkit 3 allows debugging and programming of PIC and dsPIC Flash microcontrollers at a most affordable price point using the powerful graphical user interface of the MPLAB IDE. The MPLAB PICkit 3 is connected to the design engineer's PC using a full-speed USB interface and can be connected to the target via a Microchip debug (RJ-11) connector (compatible with MPLAB ICD 3 and MPLAB REAL ICE). The connector uses two device I/O pins and the Reset line to implement in-circuit debugging and In-Circuit Serial Programming™ (ICSP™).

32.10 MPLAB PM3 Device Programmer

The MPLAB PM3 Device Programmer is a universal, CE compliant device programmer with programmable voltage verification at V_{DDMIN} and V_{DDMAX} for maximum reliability. It features a large LCD display (128 x 64) for menus and error messages, and a modular, detachable socket assembly to support various package types. The ICSP cable assembly is included as a standard item. In Stand-Alone mode, the MPLAB PM3 Device Programmer can read, verify and program PIC devices without a PC connection. It can also set code protection in this mode. The MPLAB PM3 connects to the host PC via an RS-232 or USB cable. The MPLAB PM3 has high-speed communications and optimized algorithms for quick programming of large memory devices, and incorporates an MMC card for file storage and data applications.

32.11 Demonstration/Development Boards, Evaluation Kits, and Starter Kits

A wide variety of demonstration, development and evaluation boards for various PIC MCUs and dsPIC DSCs allows quick application development on fully functional systems. Most boards include prototyping areas for adding custom circuitry and provide application firmware and source code for examination and modification.

The boards support a variety of features, including LEDs, temperature sensors, switches, speakers, RS-232 interfaces, LCD displays, potentiometers and additional EEPROM memory.

The demonstration and development boards can be used in teaching environments, for prototyping custom circuits and for learning about various microcontroller applications.

In addition to the PICDEM™ and dsPICDEM™ demonstration/development board series of circuits, Microchip has a line of evaluation kits and demonstration software for analog filter design, KEELOQ® security ICs, CAN, IrDA®, PowerSmart battery management, SEEVAL® evaluation system, Sigma-Delta ADC, flow rate sensing, plus many more.

Also available are starter kits that contain everything needed to experience the specified device. This usually includes a single application and debug capability, all on one board.

Check the Microchip web page (www.microchip.com) for the complete list of demonstration, development and evaluation kits.

32.12 Third-Party Development Tools

Microchip also offers a great collection of tools from third-party vendors. These tools are carefully selected to offer good value and unique functionality.

- Device Programmers and Gang Programmers from companies, such as SoftLog and CCS
- Software Tools from companies, such as Gimpel and Trace Systems
- Protocol Analyzers from companies, such as Saleae and Total Phase
- Demonstration Boards from companies, such as MikroElektronika, Digilent® and Olimex
- Embedded Ethernet Solutions from companies, such as EZ Web Lynx, WIZnet and IPLogika®

© 2015-2018 Microchip Technology Inc.

33.0 PACKAGING INFORMATION

33.1 Package Marking Information

24-Lead QFN (4x4x0.9 mm) **(MCP19116 only)** Example

28-Lead QFN (5x5x0.9 mm) **(MCP19117 only)** Example

Legend:	XX...X	Customer-specific information
	Y	Year code (last digit of calendar year)
	YY	Year code (last 2 digits of calendar year)
	WW	Week code (week of January 1 is week ‘01’)
	NNN	Alphanumeric traceability code
	e3	Pb-free JEDEC® designator for Matte Tin (Sn)
	*	This package is Pb-free. The Pb-free JEDEC designator (e3) can be found on the outer packaging for this package.
Note:	In the event the full Microchip part number cannot be marked on one line, it will be carried over to the next line, thus limiting the number of available characters for customer-specific information.	

24-Lead Plastic Quad Flat, No Lead Package (MJ) – 4x4x0.9 mm Body [QFN]

Note: For the most current package drawings, please see the Microchip Packaging Specification located at http://www.microchip.com/packaging

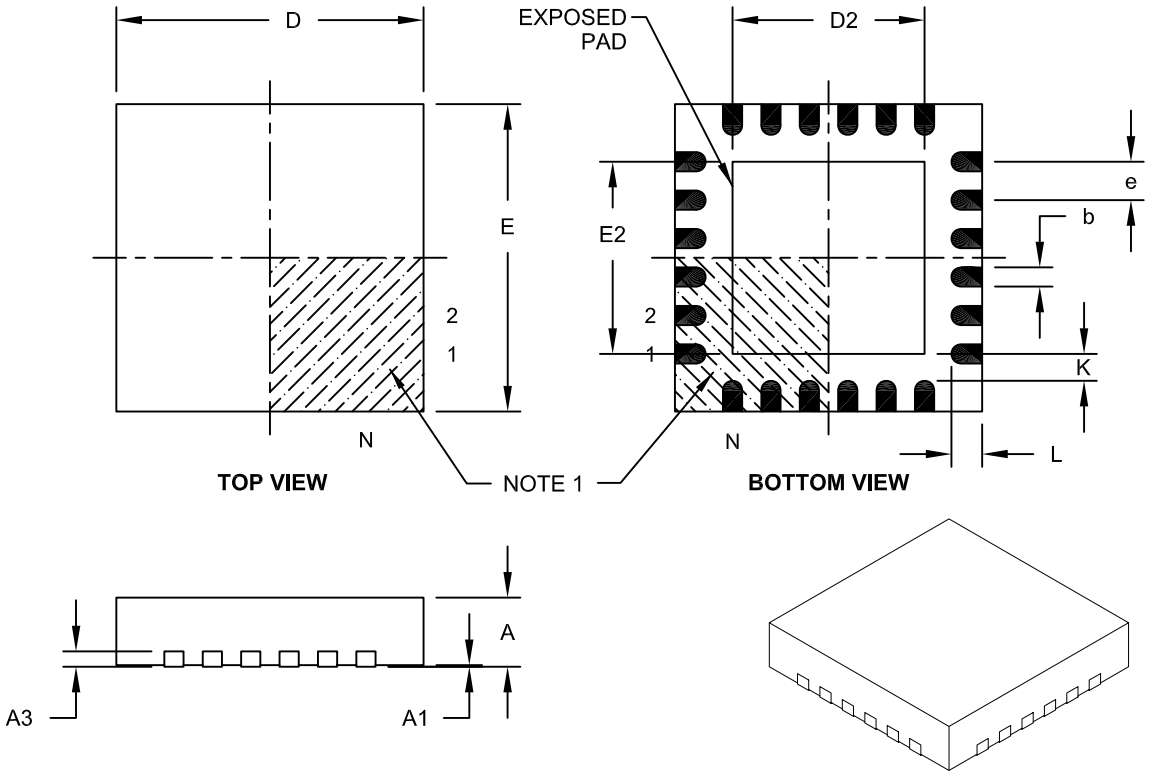

Units		MILLIMETERS		
Dimension Limits		MIN	NOM	MAX
Number of Pins	N	24		
Pitch	e	0.50 BSC		
Overall Height	A	0.80	0.85	0.90
Standoff	A1	0.00	0.02	0.05
Contact Thickness	A3	0.20 REF		
Overall Width	E	4.00 BSC		
Exposed Pad Width	E2	2.40	2.50	2.60
Overall Length	D	4.00 BSC		
Exposed Pad Length	D2	2.40	2.50	2.60
Contact Width	b	0.20	0.25	0.30
Contact Length	L	0.30	0.40	0.50
Contact-to-Exposed Pad	K	0.20	-	-

Notes:

1. Pin 1 visual index feature may vary, but must be located within the hatched area.
2. Package is saw singulated.
3. Dimensioning and tolerancing per ASME Y14.5M.
   BSC: Basic Dimension. Theoretically exact value shown without tolerances.
   REF: Reference Dimension, usually without tolerance, for information purposes only.

Microchip Technology Drawing C04-143A

© 2015-2018 Microchip Technology Inc.

24-Lead Plastic Quad Flat, No Lead Package (MJ) - 4x4 mm Body [QFN]

Note: For the most current package drawings, please see the Microchip Packaging Specification located at http://www.microchip.com/packaging

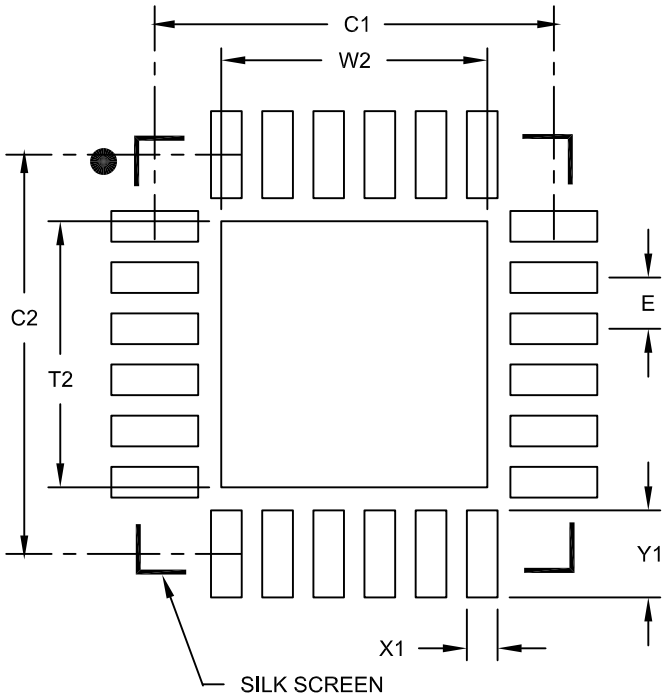

RECOMMENDED LAND PATTERN

Units		MILLIMETERS		
Dimension Limits		MIN	NOM	MAX
Contact Pitch	E		0.50 BSC	
Optional Center Pad Width	W2			2.60
Optional Center Pad Length	T2			2.60
Contact Pad Spacing	C1		3.90	
Contact Pad Spacing	C2		3.90	
Contact Pad Width	X1			0.30
Contact Pad Length	Y1			0.85

Notes:

1. Dimensioning and tolerancing per ASME Y14.5M

   BSC: Basic Dimension. Theoretically exact value shown without tolerances.

Microchip Technology Drawing No. C04-2143B

28-Lead Plastic Quad Flat, No Lead Package (MQ) – 5x5x0.9 mm Body [QFN]

Note: For the most current package drawings, please see the Microchip Packaging Specification located at http://www.microchip.com/packaging

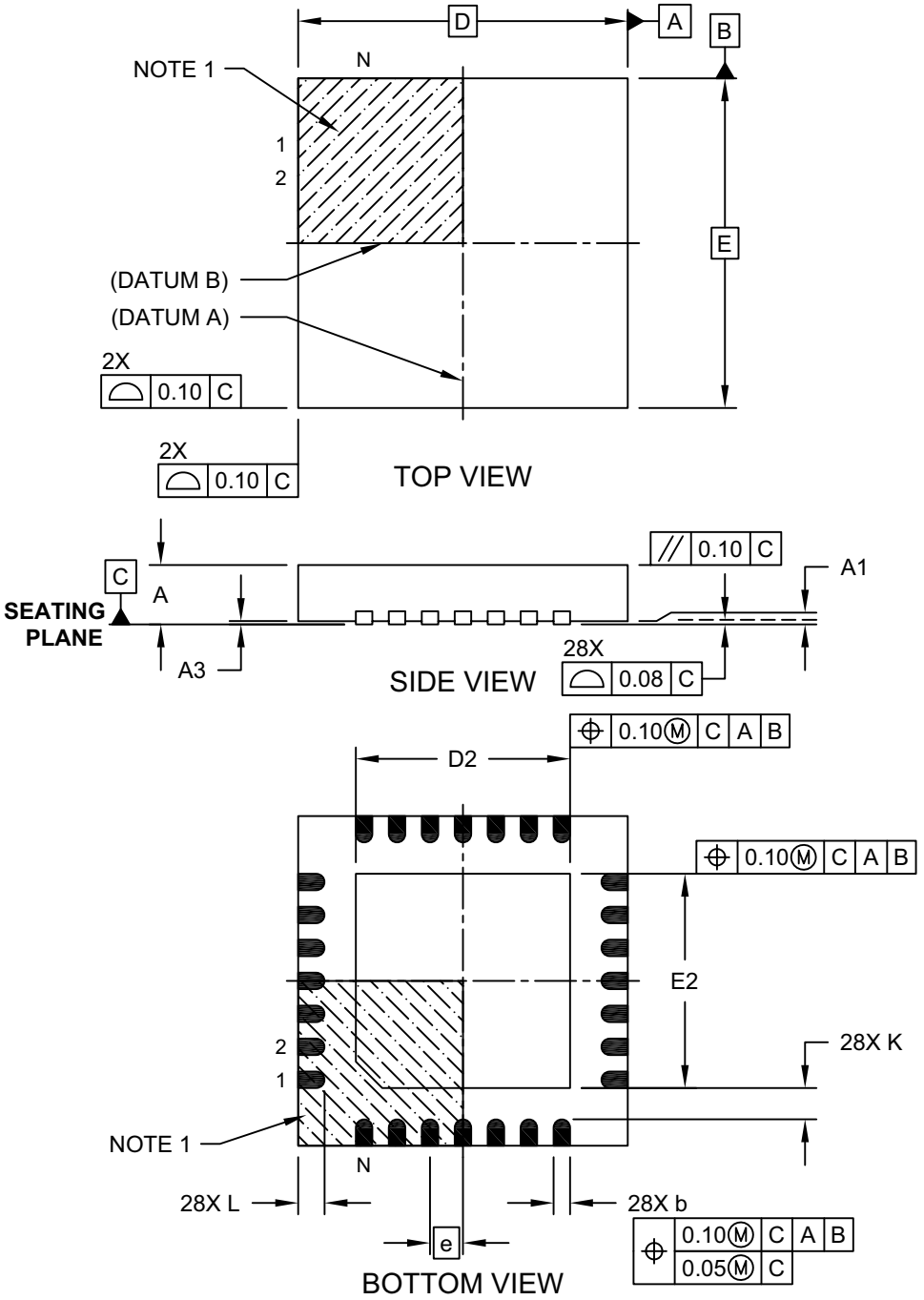

Microchip Technology Drawing C04-140C Sheet 1 of 2

© 2015-2018 Microchip Technology Inc.

28-Lead Plastic Quad Flat, No Lead Package (MQ) – 5x5x0.9 mm Body [QFN]

Note: For the most current package drawings, please see the Microchip Packaging Specification located at http://www.microchip.com/packaging

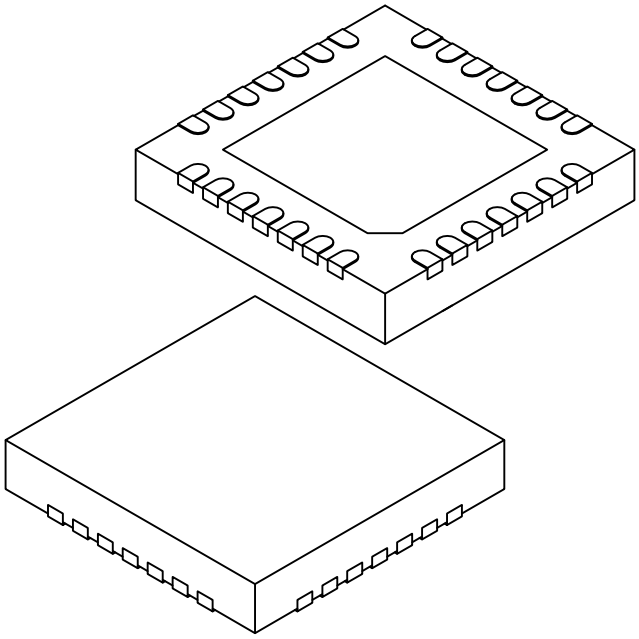

Units		MILLIMETERS		
Dimension Limits		MIN	NOM	MAX
Number of Pins	N	28		
Pitch	e	0.50 BSC		
Overall Height	A	0.80	0.90	1.00
Standoff	A1	0.00	0.02	0.05
Contact Thickness	A3	0.20 REF		
Overall Width	E	5.00 BSC		
Exposed Pad Width	E2	3.15	3.25	3.35
Overall Length	D	5.00 BSC		
Exposed Pad Length	D2	3.15	3.25	3.35
Contact Width	b	0.18	0.25	0.30
Contact Length	L	0.35	0.40	0.45
Contact-to-Exposed Pad	K	0.20	-	-

Notes:
1. Pin 1 visual index feature may vary, but must be located within the hatched area.
2. Package is saw singulated.
3. Dimensioning and tolerancing per ASME Y14.5M.
   BSC: Basic Dimension. Theoretically exact value shown without tolerances.
   REF: Reference Dimension, usually without tolerance, for information purposes only.

Microchip Technology Drawing C04-140C Sheet 2 of 2

28-Lead Plastic Quad Flat, No Lead Package (MQ) – 5x5 mm Body [QFN] Land Pattern With 0.55 mm Contact Length

Note: For the most current package drawings, please see the Microchip Packaging Specification located at http://www.microchip.com/packaging

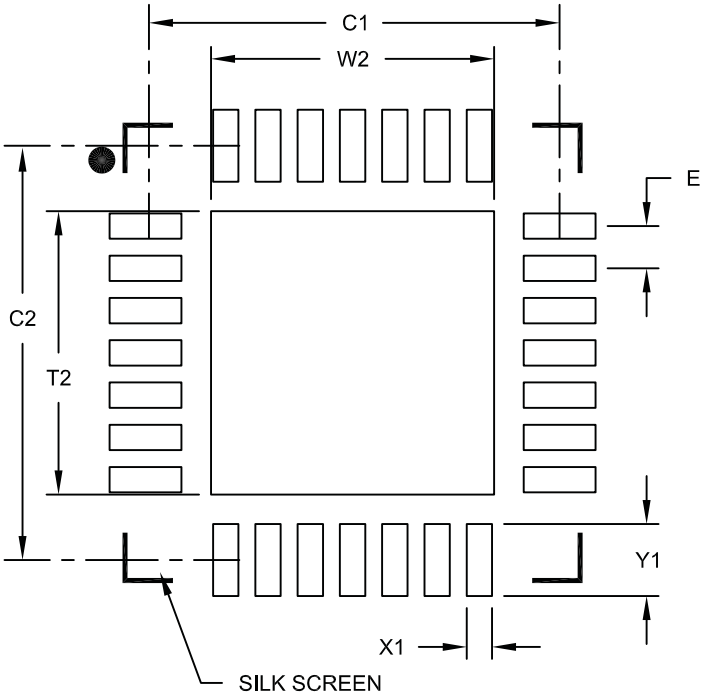

RECOMMENDED LAND PATTERN

Units		MILLIMETERS		
Dimension Limits		MIN	NOM	MAX
Contact Pitch	E		0.50 BSC	
Optional Center Pad Width	W2			3.35
Optional Center Pad Length	T2			3.35
Contact Pad Spacing	C1		4.90	
Contact Pad Spacing	C2		4.90	
Contact Pad Width (X28)	X1			0.30
Contact Pad Length (X28)	Y1			0.85

Notes:

1. Dimensioning and tolerancing per ASME Y14.5M
   BSC: Basic Dimension. Theoretically exact value shown without tolerances.

Microchip Technology Drawing C04-2140A

© 2015-2018 Microchip Technology Inc.

APPENDIX A: REVISION HISTORY

Revision C (January 2018)

- Updated Table 1 and Table 2.
- Updated Section 4.2, Electrical Characteristics.
- Updated Section 5.0, Digital Electrical Characteristics with minor changes to Table 5-3.
- Minor editorial changes

Revision B (March 2016)

- Updated Section 4.2, Electrical Characteristics with tolerances across multiple temperature ranges.
- Minor typographical changes

Revision A (December 2015)

- Original Release of this Document.

NOTES:

© 2015-2018 Microchip Technology Inc.

INDEX

A

A/D
- Specifications ... 3, 5, 37

A/D Conversion. *See* ADC
ABECON Register ... 51
Absolute Maximum Ratings ... 22
AC Characteristics ... 32
ACKSTAT
- Status Flag ... 191

ADC
- 10-Bit Result Format ... 141
- Acquisition Requirements ... 145
- Associated Registers ... 147
- Block Diagram ... 139
- Calculating Acquisition Time ... 145
- Channel Selection ... 140
- Configuration ... 140
- Configuring Interrupt ... 142
- Conversion Clock ... 140
- Conversion Procedure ... 142
- Internal Sampling Switch (R_{SS}) Impedance ... 145
- Interrupts ... 141
- Operation ... 142
- Operation During Sleep ... 142
- Port Configuration ... 140
- Register Definitions ... 143
- Requirements ... 37
- Source Impedance (R_S) ... 145
- Timing Diagram ... 38

ADCON0 Register ... 57, 143
ADCON1 Register ... 144
ADRESH Register ... 144
ADRESL Register ... 144
Analog Blocks Enable Control ... 50
- Error Amplifier Disable ... 51

Analog Peripheral Control ... 49
- PWM Steering ... 49
- Secondary Current Positive Sense Pull-Up ... 49

Analog-to-Digital Converter. *See* ADC ... 139
ANSELA Register ... 128
ANSELB Register ... 132
Application Diagrams
- MCP19116 Boost Quasi-Resonant ... 11
- MCP19116 Cuk' Synchronous Positive Output ... 11

Assembler
- MPASM Assembler ... 224

B

Bench Testing
- System ... 57

BF ... 193
- Status Flag ... 191

BF Status Flag ... 193
Block Diagrams
- ADC ... 139
- ADC Transfer Function ... 146
- Analog Input Model ... 146
- Baud Rate Generator ... 202
- Capture Mode Operation ... 161
- Compare Mode Operation ... 162
- Interrupt Logic ... 106
- MCP19116/7 Flyback Synchronous Quasi-Resonant. 10
- Microcontroller Core ... 12
- MSSP (I^2C Master Mode) ... 167
- MSSP (I^2C Slave Mode) ... 168
- On-Chip Reset Circuit ... 97
- Pulse-Width Modulation (PWM) ... 158
- Recommended $\overline{MCLR}$ Circuit ... 98
- Timer0 ... 149
- Timer1 ... 151
- Timer2 ... 155
- USART Receive ... 72
- USART Transmit ... 70
- Watchdog Timer with Shared Prescale ... 117

Brown-Out Reset (BOR) ... 99

C

C Compilers
- MPLAB XC ... 224

Calibration Word Registers
- CALWD1 (Calibration Word 1) ... 59
- CALWD10 (Calibration Word 10) ... 66
- CALWD11 (Calibration Word 11) ... 68
- CALWD2 (Calibration Word 2) ... 60
- CALWD3 (Calibration Word 3) ... 61
- CALWD4 (Calibration Word 4) ... 61
- CALWD5 (Calibration Word 5) ... 62
- CALWD6 (Calibration Word 6) ... 62
- CALWD7 (Calibration Word 7) ... 63
- CALWD8 (Calibration Word 8) ... 64
- CALWD9 (Calibration Word 9) ... 65

Capture Mode
- Block Diagram ... 161

Capture/Compare (CCD) Module
- Capture Mode ... 161
  - CCP1IF ... 161
  - CCX Pin Configuration ... 161
  - Prescaler ... 161
  - Software Interrupt ... 161
  - Timer1 Mode Selection ... 161
- Compare Mode
  - CCP1IF ... 162
  - CMPX Pin Configuration ... 162
  - Software Interrupt ... 162
  - Special Event Trigger ... 162
  - Timer1 Mode Selection ... 162
- Register ... 163

CCDCON Register ... 163
Clock Switching ... 96
Code Example
- Indirect Addressing ... 92

Code Examples
- A/D Conversion ... 142
- Assigning Prescaler to Timer0 ... 150
- Assigning Prescaler to WDT ... 150
- Initializing PORTGPA ... 125
- Saving Status and W Registers in RAM ... 113

Compare Mode
- Block Diagram ... 162

Computed Function Calls ... 91
Computed GOTO ... 91
Configuration Word ... 93
- Registers Associated with Clock Sources ... 96
- with Watchdog Timer ... 118

Current Sense ... 19
Customer Change Notification Service ... 241
Customer Support ... 241

D

Data Memory
- Core Registers ... 83
  - STATUS Register ... 83
- General Purpose Registers ... 82
- Map ... 85
- Organization ... 82
- Special Function Registers ... 82, 84

DC and AC Characteristics ... 53
- Graphs and Tables ... 53

DEADCON Register ... 47
DESATCON Register ... 43
Desaturation Detection for Quasi-Resonant Operation ... 43
Development Support ... 223
Device Calibration ... 59
- CALWD1 (Calibration Word 1) ... 59
- CALWD10 (Calibration Word 10) ... 66
- CALWD11 (Calibration Word 11) ... 68
- CALWD2 (Calibration Word 2) ... 60
- CALWD3 (Calibration Word 3) ... 61
- CALWD4 (Calibration Word 4) ... 61
- CALWD5 (Calibration Word 5) ... 62
- CALWD6 (Calibration Word 6) ... 62
- CALWD7 (Calibration Word 7) ... 63
- CALWD8 (Calibration Word 8) ... 64
- CALWD9 (Calibration Word 9) ... 65

Device Configuration ... 39, 93
- Code Protection ... 94
- Configuration Word ... 93
- ID Locations ... 94
- Write Protection ... 94

Device Overview ... 9
Digital Electrical Characteristics ... 31
Direct Addressing ... 92
Driver Control Circuitry ... 20

E

Electrical Characteristics ... 22
Errata ... 7
External Clock
- Timing ... 32
- Timing Requirements ... 32

F

Features ... 1
- Microcontroller ... 1
- Timer0 Module ... 149
- Timer1 Module ... 151

File Select Register. *See* FSR
Firmware Instructions ... 211
Flash Program Memory
- Control ... 119
  - Operation During Code Protect ... 123
  - Operation During Write Protect ... 123
  - Protection Against Spurious Write ... 123
  - Registers ... 120
- Reading ... 122
- Writing to ... 123

FSR
- Register ... 91

G

General Purpose Register. *See* GPR
GPR
- Register ... 82

I

I/Q Ports ... 125
I^2C Mode (MSSP)
- Acknowledge Sequence ... 172
- Acknowledge Sequence Timing ... 195
- Associated Registers ... 201
- Bus Collision
  - During a Repeated Start Condition ... 199
  - During a Start Condition ... 197
  - During a Stop Condition ... 200
- Effects of a Reset ... 196
- I^2C Clock Rate w/BRG ... 202
- Master Mode ... 188
  - Clock Arbitration ... 188
  - Operation ... 188
  - Reception ... 193
  - Repeated Start Condition Timing ... 190
  - Start Condition Timing ... 189
  - Transmission ... 191
- Multi-Master Communication, Bus Collision and Arbitration ... 196
- Multi-Master Mode ... 196
- Operation ... 170
- Overview ... 168
- Read/Write Bit Information (R/$\overline{W}$ Bit) ... 172
- Slave Mode
  - 10-bit Address Reception ... 182
  - Bus Collision ... 178
  - Clock Stretching ... 186
  - Clock Synchronization ... 186
  - General Call Address Support ... 187
  - Operation ... 172
  - SSPMSK1 Register ... 208
  - Transmission ... 178
- Sleep Operation ... 196
- Stop Condition Timing ... 195

ICLEBCON Register ... 45
ICOACON Register ... 44
In-Circuit Serial Programming (ICSP)
- Common Programming Interfaces ... 221

INDF
- Register ... 91

Indirect Addressing ... 91, 92
Input ... 22
- Overvoltage Lockout ... 39
- Type ... 13
- Undervoltage Lockout ... 39

Instruction Format ... 211
Instruction Set ... 211
- ADDLW ... 213
- ADDWF ... 213
- ANDLW ... 213
- ANDWF ... 213
- BCF ... 213
- BSF ... 213
- BTFSC ... 213
- BTFSS ... 214
- CALL ... 214
- CLRF ... 214
- CLRW ... 214
- CLRWDT ... 214
- COMF ... 214
- DECF ... 214
- DECFSZ ... 215
- GOTO ... 215

© 2015-2018 Microchip Technology Inc.

INCF ... 215
INCFSZ ... 215
IORLW ... 215
IORWF ... 215
MOVF ... 216
MOVLW ... 216
MOVWF ... 216
NOP ... 216
RETFIE ... 217
RETLW ... 217
RETURN ... 217
RLF ... 217
RRF ... 218
SLEEP ... 218
SUBLW ... 218
SUBWF ... 218
Summary Table ... 212
SWAPF ... 218
XORLW ... 218
XORWF ... 219
INTCON Register ... 107
Internal Sampling Switch (R_{SS}) Impedance ... 145
Internet Address ... 241
Interrupt-on-Change ... 133
Associated Registers ... 135
Clearing Interrupt Flags ... 133
Enabling the Module ... 133
Individual Pin Configuration ... 133
Operation in Sleep ... 133
Registers ... 134
Interrupts
ADC ... 142
Associated Registers ... 112
Configuration Word w/ Clock Sources ... 96
Context Saving ... 113
Control Registers ... 107
GPA2/INT ... 105
Timer0 ... 150
Timer1 ... 152
IOCA Register ... 134
IOCB Register ... 134

L

Leading Edge Blanking ... 45
Linear Regulators ... 19

M

Magnetic Desaturation Detection ... 19
Master Synchronous Serial Port. *See* MSSP ... 167
MCLR ... 98
Internal ... 98
Memory Organization ... 69, 81
Data ... 82
Program ... 81
Microchip Internet Web Site ... 241
Mode and RFB MUX Control ... 52
MODECON Register ... 52
MOSFET ... 17
Driver
Dead Time ... 49
Programmable Dead Time ... 47
Undervoltage Lockout Selection ... 50
Gate Driver Enables ... 49
MPLAB Assembler, Linker, Librarian ... 224
MPLAB ICD 3 In-Circuit Debugger System ... 225
MPLAB Integrated Development Environment Software ... 223
MPLAB PM3 Device Programmer ... 225
MPLAB REAL ICE In-Circuit Emulator System ... 225
MPLAB X SIM Software Simulator ... 225
MPLINK Object Linker/MPLIB Object Librarian ... 224
MSSP
Arbitration ... 169
Baud Rate Generator ... 202
Block Diagram (I^2C Master Mode) ... 167
Block Diagram (I^2C Slave Mode) ... 168
Clock Stretching ... 169
I^2C Bus Terms ... 170
I^2C Master Mode ... 188
I^2C Mode ... 168
I^2C Mode Operation ... 170
I^2C Slave Mode Operation ... 172
Overview ... 167

O

OPCODE Field Descriptions ... 211
OPTION_REG Register ... 90
Oscillator ... 95
Associated Registers ... 96
Calibration ... 95
Delay Upon Base Frequency Change ... 96
Delay Upon Power-Up ... 96
Delay Upon Wake-Up ... 96
Frequency Tuning ... 95
Internal ... 95
OSCTUNE Register ... 95
Output
Drive Circuitry ... 19
Overvoltage ... 41
OVCON Register ... 41
OVREFCON Register ... 42
Protection ... 41
Type ... 13
Output Regulation Reference Voltage Configuration ... 48
OVCON Register ... 41
Overvoltage Lockout
Input ... 39
OVREFCON Register ... 42

P

Package Marking Information ... 227
PCL ... 91
Modifying ... 91
PCLATH ... 91
PCON Register ... 100, 102
PE1 Register ... 50
Peak Current Mode ... 19
PICkit 3 In-Circuit Debugger/Programmer ... 225
PIE1 Register ... 108
PIE2 Register ... 109
Pin Diagram
24-Pin QFN (MCP19116) ... 2
28-Pin QFN (MCP19117) ... 4
Pinout Description
Summary ... 3, 5
Table ... 13
PIR1 Register ... 110
PIR2 Register ... 111
PMADRH Register ... 119, 121
PMADRL Register ... 119, 120
PMCON1 Register ... 119, 121
PMCON2 Register ... 119
PMDATH Register ... 120

PMDATL Register 120
PORTGPA..... 125, 133
ANSELA Register 126
Associated Registers 129
Functions and Output Priorities..... 126
Interrupt-on-Change..... 125
Output Priority 126
Register..... 125, 127
Weak Pull-Ups 125
PORTGPB..... 129, 133
ANSELB Register 129
Associated Registers 132
Functions and Output Priorities..... 130
Interrupt-on-Change..... 129
Output Priority 130
Register..... 129, 130
Weak Pull-Ups 129
Power-Down Mode (Sleep)..... 115
Associated Registers 116
Power-On Reset (POR) 98
Power-Up Timer (PWRT)..... 100
Primary Input Current Offset Adjust 44
Program Memory
Organization..... 81
Protection..... 94
Programming, Device Instructions 211
Pulse-Width Modulation
Control Logic..... 165
Pulse-Width Modulation. *See* PWM
PWM 36
Associated Registers 159
Control Logic..... 165
Duty Cycle..... 159
Enhanced Module 157
Fixed Frequency 20
Operation During Sleep 159
Output 158
Period..... 158
Requirements..... 36
Simplified Diagram..... 158
Stand-Alone Mode 157
Standard Mode 157
Steering..... 49
Switching Frequency Synchronization Mode 157
Timing Diagram..... 36

R

Read-Modify-Write Operations..... 211
Registers
ABECON (Analog Block Enable Control)..... 51
ADCON0 (A/D Control 0) 143
ADCON0 (Analog-to-Digital Control) 57
ADCON1 (A/D Control 1) 144
ADRESH (ADC Result High) 144
ADRESL (ADC Result Low)..... 144
ANSELA (Analog Select GPA)..... 128
ANSELB (Analog Select GPB)..... 132
CALWD1 (Calibration Word 1)..... 59
CALWD10 (Calibration Word 10)..... 66
CALWD11 (Calibration Word 11)..... 68
CALWD2 (Calibration Word 2)..... 60
CALWD3 (Calibration Word 3)..... 61
CALWD4 (Calibration Word 4)..... 61
CALWD5 (Calibration Word 5)..... 62
CALWD6 (Calibration Word 6)..... 62
CALWD7 (Calibration Word 7)..... 63
CALWD8 (Calibration Word 8)..... 64
CALWD9 (Calibration Word 9)..... 65
CCDCON (Dual Capture/Compare Control Module) 163
CONFIG (Configuration Word) 93
DEADCON (Driver Dead Time Control)..... 47
DESATCON (Desaturation Comparator Control) 43
FSR (File Select Register)..... 91
General Purpose Register 82
ICLEBCON (Input Current Leading Edge Blanking Control) 45
ICOACON (Input Current Offset Adjust Control) 44
INDF 91
INTCON (Interrupt Control)..... 107
IOCA (Interrupt-on-Change PORTGPA)..... 134
IOCB (Interrupt-on-Change PORTGPB)..... 134
MODECON (Master/Slave and RFB MUX Control).... 52
OSCTUNE (Oscillator Tuning)..... 95
OVCON (Output Overvoltage Comparator Control) ... 41
OVREFCON (Output Overvoltage Detect Level)..... 42
PCON (Power Control) 100, 102
PE1 (Analog Peripheral Enable1 Control) 50
PIE1 (Peripheral Interrupt Enable 1)..... 108
PIE2 (Peripheral Interrupt Enable 2)..... 109
PIR1 (Peripheral Interrupt Flag 1)..... 110
PIR2 (Peripheral Interrupt Flag 2)..... 111
PMADRH (Program Memory Address High) 119, 121
PMADRL (Program Memory Address Low)..... 119, 120
PMCON1 (Program Memory Control 1)..... 119, 121
PMCON2 (Program Memory Control 2)..... 119
PMDATH (Program Memory Data High) 120
PMDATL (Program Memory Data Low)..... 120
PORTGPA 125, 127
PORTGPB 129, 130
SLPCRCON (Slope Compensation Ramp Control).... 46
Special Function 82
Special Registers Summary
Bank 0 86
Bank 1 87
Bank 2 88
Bank 3 89
SSPADD (MSSP Address and Baud Rate 1) 208
SSPADD2 (MSSP Address 2) 209
SSPCON1 (SSP Control 1) 204
SSPCON2 (SSP Control 2) 206
SSPCON3 (SSP Control 3) 207
SSPMSK1 (SSP Mask 1)..... 208
SSPMSK2 (SSP Mask 2)..... 209
SSPSTAT (SSP Status)..... 203
STATUS 83
T1CON (Timer1 Control) 152
T2CON (Timer2 Control) 156
TRISGPA (PORTGPA Tri-State) 125, 127
TRISGPB (PORTGPB Tri-State) 129, 131
VINCON (UVLO and OVLO Comparator Control)..... 39
VINOVLO (Input Overvoltage Lockout) 40
VINUVLO (Input Undervoltage Lockout)..... 40
VREF2CON (V_{REF2} Voltage Set Point) 49
VREFCON (Current/Voltage Regulation Set Point Control) 48
WPUGPA (Weak Pull-Up PORTGPA)..... 128
WPUGPB (Weak Pull-Up PORTGPB)..... 131
Requirements
A/D Acquisition 145
A/D Conversion..... 37
External Clock, Timing..... 32

© 2015-2018 Microchip Technology Inc.

I/O, Timing 33
PWM 36
Reset, Watchdog Timer, Oscillator Start-Up Timer and Power-Up Timer 35
Timer0 External Clock 36
Resets 97
Associated Registers 103
Brown-Out 99
Determining Causes 101
Power-On 98
Watchdog Timer 100

S

Sleep
Wake-Up from 115
Wake-Up Using Interrupts 116
Slope Compensation 46
SLPCRCON Register 46
Software Simulator (MPLAB X SIM) 225
Special Event Trigger
Capture/Compare Module 162
Special Function Registers (SFR) 82
SSPADD Register 208
SSPADD2 Register 209
SSPCON1 Register 204
SSPCON2 Register 206
SSPCON3 Register 207
SSPMSK1 Register 208
SSPMSK2 Register 209
SSPOV 193
SSPOV Status Flag 193
SSPSTAT Register 203
R/$\overline{W}$ Bit 172
Stack 91
Start-Up 20
Start-Up Sequence 100
STATUS Register 83
System Bench Testing 57

T

T1CON Register 152
T2CON Register 156
Temperature Indicator Module 137
Circuit Operation 137
Temperature Output 137
Thermal Specifications 30
Timer0 149
8-bit Counter Mode 149
8-bit Timer Mode 149
Associated Registers 150
Block Diagram 149
External Clock 150
Requirements 36
Timing 35
Interrupt 150
Module 149
Features 149
Operation 149
During Sleep 150
Software Programmable Prescaler 149
Switching Prescaler 150
T0CKI 150
TMR0 Register 149
Timer1 151
Associated Registers 153
Block Diagram 151
Clock Source Selection 151
Control Register 152
External Clock Timing 35
Interrupt 152
Module
Features 151
Operation 151
During Sleep 152
Prescaler 152
TMR1H Register 151
TMR1L Register 151
Timer2
Associated Registers 156
Block Diagram 155
Control Register 156
Module 155
Features 155
Operation 155
Timers
Timer1 (T1CON) 152
Timer2 (T2CON) 156
Timing Diagrams
A/D Conversion 38
Acknowledge Sequence 195
Asynchronous Reception 73
Baud Rate Generator Timing with Clock Arbitration 189
BRG Reset Due to SDA Arbitration During Start Condition 198
Bus Collision During a Repeated Start Condition (Case 1) 199
Bus Collision During a Repeated Start Condition (Case 2) 199
Bus Collision During a Start Condition (SCL = 0) 198
Bus Collision During a Start Condition (SDA Only) 197
Bus Collision During a Stop Condition (Case 1) 200
Bus Collision During a Stop Condition (Case 2) 200
Bus Collision for Transmit and Acknowledge 196
Clock Synchronization 186
First Start Bit 189
I/O 33
I^2C Master Mode (7 or 10-Bit Transmission) 192
I^2C Master Mode (7-Bit Reception) 194
INT Pin Interrupt 106
Power-Up Timer 34
Pulse-Width Modulation 36
Repeat Start Condition 190
Reset 34
Start-Up Timer 34
Stop Condition Receive or Transmit Mode 195
Synchronous Reception (Master Mode, SREN) 76
Synchronous Transmission 74
Synchronous Transmission (through TXEN) 75
Time-Out Sequence
Case 1 100
Case 2 101
Case 3 101
Timer0, External Clock 35
Timer1, External Clock 35
USART, Asynchronous Reception 73
Wake-up from Interrupt 116
Watchdog Timer 34
Timing Parameter Symbology 31
TRISGPA 125
Register 125, 127
TRISGPB 129

Register 129, 131
Typical Performance Curves 53

U

Undervoltage Lockout
Input 39
Selection for MOSFET Driver 50
Universal Synchronous Asynchronous Receiver Transmitter (USART)
Asynchronous Receiver
Timing Diagram 73
USART
Asynchronous Reception 72
Synchronous Slave Mode 76
Synchronous Slave Transmit 76, 77
Transmit Block Diagram 70

V

VINCON Register 39
VINOVLO Register 40
VINUVLO Register 40
V_{REF2} Voltage Reference 49
VREF2CON Register 49
VREFCON Register 48

W

Watchdog Timer. *See* WDT
WCOL 195
Status Flag 189, 191, 193, 195
WCOL Status Flag 195
WDT 117
Associated Registers 118
Block Diagram 117
Configuration Word w/ Watchdog Timer 118
Operation 117
Period 117
Programming Considerations 117
Reset 100
Switching Prescaler 150
WPUGPA Register 128
WPUGPB Register 131
WWW Address 241
WWW, On-Line Support 7

© 2015-2018 Microchip Technology Inc.

THE MICROCHIP WEB SITE

Microchip provides online support via our web site at www.microchip.com. This web site is used as a means to make files and information easily available to customers. Accessible by using your favorite Internet browser, the web site contains the following information:

- **Product Support** – Data sheets and errata, application notes and sample programs, design resources, user's guides and hardware support documents, latest software releases and archived software
- **General Technical Support** – Frequently Asked Questions (FAQ), technical support requests, online discussion groups, Microchip consultant program member listing
- **Business of Microchip** – Product selector and ordering guides, latest Microchip press releases, listing of seminars and events, listings of Microchip sales offices, distributors and factory representatives

CUSTOMER CHANGE NOTIFICATION SERVICE

Microchip's customer notification service helps keep customers current on Microchip products. Subscribers will receive e-mail notification whenever there are changes, updates, revisions or errata related to a specified product family or development tool of interest.

To register, access the Microchip web site at www.microchip.com. Under "Support", click on "Customer Change Notification" and follow the registration instructions.

CUSTOMER SUPPORT

Users of Microchip products can receive assistance through several channels:

- Distributor or Representative
- Local Sales Office
- Field Application Engineer (FAE)
- Technical Support

Customers should contact their distributor, representative or Field Application Engineer (FAE) for support. Local sales offices are also available to help customers. A listing of sales offices and locations is included in the back of this document.

Technical support is available through the web site at: http://microchip.com/support

NOTES:

© 2015-2018 Microchip Technology Inc.

PRODUCT IDENTIFICATION SYSTEM

To order or obtain information, e.g., on pricing or delivery, refer to the factory or the listed sales office.

PART NO.	[X] (1)	–	X	/XX	XXX
Device	Tape and Reel Option		Temperature Range	Package	Pattern

Device:	MCP19116: Digitally Enhanced PWM Power Analog High-Speed Controller MCP19117: Digitally Enhanced PWM Power Analog High-Speed Controller
Tape and Reel Option:	Blank = Standard packaging (tube) T = Tape and Reel
Temperature Range:	E = -40°C to +125°C (Extended)
Package:	MJ = 24-Lead Plastic Quad Flat, No Lead Package – 4x4x0.9 mm Body [QFN] MQ = 28-Lead Plastic Quad Flat, No Lead Package – 5x5x0.9 mm Body [QFN]

Examples:

a) MCP19116-E/MJ: Extended temperature, 24LD QFN 4x4 package
b) MCP19116T-E/MJ: Tape and Reel, Extended Temperature, 24LD QFN 4x4 package

a) MCP19117-E/MQ: Extended temperature, 28LD 5x5 QFN package
b) MCP19117T-E/MQ: Tape and Reel, Extended temperature, 28LD 5x5 QFN package

Note 1: Tape and Reel identifier only appears in the catalog part number description. This identifier is used for ordering purposes and is not printed on the device package. Check with your Microchip Sales Office for package availability with the Tape and Reel option.

NOTES:

© 2015-2018 Microchip Technology Inc.

Note the following details of the code protection feature on Microchip devices:

- Microchip products meet the specification contained in their particular Microchip Data Sheet.
- Microchip believes that its family of products is one of the most secure families of its kind on the market today, when used in the intended manner and under normal conditions.
- There are dishonest and possibly illegal methods used to breach the code protection feature. All of these methods, to our knowledge, require using the Microchip products in a manner outside the operating specifications contained in Microchip's Data Sheets. Most likely, the person doing so is engaged in theft of intellectual property.
- Microchip is willing to work with the customer who is concerned about the integrity of their code.
- Neither Microchip nor any other semiconductor manufacturer can guarantee the security of their code. Code protection does not mean that we are guaranteeing the product as "unbreakable."

Code protection is constantly evolving. We at Microchip are committed to continuously improving the code protection features of our products. Attempts to break Microchip's code protection feature may be a violation of the Digital Millennium Copyright Act. If such acts allow unauthorized access to your software or other copyrighted work, you may have a right to sue for relief under that Act.

Information contained in this publication regarding device applications and the like is provided only for your convenience and may be superseded by updates. It is your responsibility to ensure that your application meets with your specifications. MICROCHIP MAKES NO REPRESENTATIONS OR WARRANTIES OF ANY KIND WHETHER EXPRESS OR IMPLIED, WRITTEN OR ORAL, STATUTORY OR OTHERWISE, RELATED TO THE INFORMATION, INCLUDING BUT NOT LIMITED TO ITS CONDITION, QUALITY, PERFORMANCE, MERCHANTABILITY OR FITNESS FOR PURPOSE**.** Microchip disclaims all liability arising from this information and its use. Use of Microchip devices in life support and/or safety applications is entirely at the buyer's risk, and the buyer agrees to defend, indemnify and hold harmless Microchip from any and all damages, claims, suits, or expenses resulting from such use. No licenses are conveyed, implicitly or otherwise, under any Microchip intellectual property rights unless otherwise stated.

Microchip received ISO/TS-16949:2009 certification for its worldwide headquarters, design and wafer fabrication facilities in Chandler and Tempe, Arizona; Gresham, Oregon and design centers in California and India. The Company's quality system processes and procedures are for its PIC® MCUs and dsPIC® DSCs, KEELOQ® code hopping devices, Serial EEPROMs, microperipherals, nonvolatile memory and analog products. In addition, Microchip's quality system for the design and manufacture of development systems is ISO 9001:2000 certified.

QUALITY MANAGEMENT SYSTEM
CERTIFIED BY DNV
═ ISO/TS 16949 ═

Trademarks

The Microchip name and logo, the Microchip logo, AnyRate, dsPIC, FlashFlex, flexPWR, Heldo, JukeBlox, KeeLoq, KeeLoq logo, Kleer, LANCheck, LINK MD, MediaLB, MOST, MOST logo, MPLAB, OptoLyzer, PIC, PICSTART, PIC32 logo, RightTouch, SpyNIC, SST, SST Logo, SuperFlash and UNI/O are registered trademarks of Microchip Technology Incorporated in the U.S.A. and other countries.

ClockWorks, The Embedded Control Solutions Company, ETHERSYNCH, Hyper Speed Control, HyperLight Load, IntelliMOS, mTouch, Precision Edge, and QUIET-WIRE are registered trademarks of Microchip Technology Incorporated in the U.S.A.

Analog-for-the-Digital Age, Any Capacitor, AnyIn, AnyOut, BodyCom, chipKIT, chipKIT logo, CodeGuard, dsPICDEM, dsPICDEM.net, Dynamic Average Matching, DAM, ECAN, EtherGREEN, In-Circuit Serial Programming, ICSP, Inter-Chip Connectivity, JitterBlocker, KleerNet, KleerNet logo, MiWi, motorBench, MPASM, MPF, MPLAB Certified logo, MPLIB, MPLINK, MultiTRAK, NetDetach, Omniscient Code Generation, PICDEM, PICDEM.net, PICkit, PICtail, PureSilicon, RightTouch logo, REAL ICE, Ripple Blocker, Serial Quad I/O, SQI, SuperSwitcher, SuperSwitcher II, Total Endurance, TSHARC, USBCheck, VariSense, ViewSpan, WiperLock, Wireless DNA, and ZENA are trademarks of Microchip Technology Incorporated in the U.S.A. and other countries.

SQTP is a service mark of Microchip Technology Incorporated in the U.S.A.

Silicon Storage Technology is a registered trademark of Microchip Technology Inc. in other countries.

GestIC is a registered trademarks of Microchip Technology Germany II GmbH & Co. KG, a subsidiary of Microchip Technology Inc., in other countries.

All other trademarks mentioned herein are property of their respective companies.

© 2015-2018, Microchip Technology Incorporated, Printed in the U.S.A., All Rights Reserved.

ISBN: 978-1-5224-2551-9

Worldwide Sales and Service

AMERICAS

Corporate Office
2355 West Chandler Blvd.
Chandler, AZ 85224-6199
Tel: 480-792-7200
Fax: 480-792-7277
Technical Support:
http://www.microchip.com/support
Web Address:
www.microchip.com

Atlanta
Duluth, GA
Tel: 678-957-9614
Fax: 678-957-1455

Austin, TX
Tel: 512-257-3370

Boston
Westborough, MA
Tel: 774-760-0087
Fax: 774-760-0088

Chicago
Itasca, IL
Tel: 630-285-0071
Fax: 630-285-0075

Dallas
Addison, TX
Tel: 972-818-7423
Fax: 972-818-2924

Detroit
Novi, MI
Tel: 248-848-4000

Houston, TX
Tel: 281-894-5983

Indianapolis
Noblesville, IN
Tel: 317-773-8323
Fax: 317-773-5453
Tel: 317-536-2380

Los Angeles
Mission Viejo, CA
Tel: 949-462-9523
Fax: 949-462-9608
Tel: 951-273-7800

Raleigh, NC
Tel: 919-844-7510

New York, NY
Tel: 631-435-6000

San Jose, CA
Tel: 408-735-9110
Tel: 408-436-4270

Canada - Toronto
Tel: 905-695-1980
Fax: 905-695-2078

ASIA/PACIFIC

Australia - Sydney
Tel: 61-2-9868-6733

China - Beijing
Tel: 86-10-8569-7000

China - Chengdu
Tel: 86-28-8665-5511

China - Chongqing
Tel: 86-23-8980-9588

China - Dongguan
Tel: 86-769-8702-9880

China - Guangzhou
Tel: 86-20-8755-8029

China - Hangzhou
Tel: 86-571-8792-8115

China - Hong Kong SAR
Tel: 852-2943-5100

China - Nanjing
Tel: 86-25-8473-2460

China - Qingdao
Tel: 86-532-8502-7355

China - Shanghai
Tel: 86-21-3326-8000

China - Shenyang
Tel: 86-24-2334-2829

China - Shenzhen
Tel: 86-755-8864-2200

China - Suzhou
Tel: 86-186-6233-1526

China - Wuhan
Tel: 86-27-5980-5300

China - Xian
Tel: 86-29-8833-7252

China - Xiamen
Tel: 86-592-2388138

China - Zhuhai
Tel: 86-756-3210040

ASIA/PACIFIC

India - Bangalore
Tel: 91-80-3090-4444

India - New Delhi
Tel: 91-11-4160-8631

India - Pune
Tel: 91-20-4121-0141

Japan - Osaka
Tel: 81-6-6152-7160

Japan - Tokyo
Tel: 81-3-6880- 3770

Korea - Daegu
Tel: 82-53-744-4301

Korea - Seoul
Tel: 82-2-554-7200

Malaysia - Kuala Lumpur
Tel: 60-3-7651-7906

Malaysia - Penang
Tel: 60-4-227-8870

Philippines - Manila
Tel: 63-2-634-9065

Singapore
Tel: 65-6334-8870

Taiwan - Hsin Chu
Tel: 886-3-577-8366

Taiwan - Kaohsiung
Tel: 886-7-213-7830

Taiwan - Taipei
Tel: 886-2-2508-8600

Thailand - Bangkok
Tel: 66-2-694-1351

Vietnam - Ho Chi Minh
Tel: 84-28-5448-2100

EUROPE

Austria - Wels
Tel: 43-7242-2244-39
Fax: 43-7242-2244-393

Denmark - Copenhagen
Tel: 45-4450-2828
Fax: 45-4485-2829

Finland - Espoo
Tel: 358-9-4520-820

France - Paris
Tel: 33-1-69-53-63-20
Fax: 33-1-69-30-90-79

Germany - Garching
Tel: 49-8931-9700

Germany - Haan
Tel: 49-2129-3766400

Germany - Heilbronn
Tel: 49-7131-67-3636

Germany - Karlsruhe
Tel: 49-721-625370

Germany - Munich
Tel: 49-89-627-144-0
Fax: 49-89-627-144-44

Germany - Rosenheim
Tel: 49-8031-354-560

Israel - Ra'anana
Tel: 972-9-744-7705

Italy - Milan
Tel: 39-0331-742611
Fax: 39-0331-466781

Italy - Padova
Tel: 39-049-7625286

Netherlands - Drunen
Tel: 31-416-690399
Fax: 31-416-690340

Norway - Trondheim
Tel: 47-7289-7561

Poland - Warsaw
Tel: 48-22-3325737

Romania - Bucharest
Tel: 40-21-407-87-50

Spain - Madrid
Tel: 34-91-708-08-90
Fax: 34-91-708-08-91

Sweden - Gothenberg
Tel: 46-31-704-60-40

Sweden - Stockholm
Tel: 46-8-5090-4654

UK - Wokingham
Tel: 44-118-921-5800
Fax: 44-118-921-5820

© 2015-2018 Microchip Technology Inc.

Mouser Electronics

Authorized Distributor

Click to View Pricing, Inventory, Delivery & Lifecycle Information:

Microchip:

MCP19116-E/MJ MCP19116T-E/MJ MCP19117-E/MQ MCP19117T-E/MQ

ООО «ЛайфЭлектроникс» “LifeElectronics” LLC

ИНН 7805602321 КПП 780501001 Р/С 40702810122510004610 ФАКБ "АБСОЛЮТ БАНК" (ЗАО) в г.Санкт-Петербурге К/С 30101810900000000703 БИК 044030703

Компания «Life Electronics» занимается поставками электронных компонентов импортного и отечественного производства от производителей и со складов крупных дистрибьюторов Европы, Америки и Азии.

С конца 2013 года компания активно расширяет линейку поставок компонентов по направлению коаксиальный кабель, кварцевые генераторы и конденсаторы (керамические, пленочные, электролитические), за счёт заключения дистрибьюторских договоров

Мы предлагаем:

- *Конкурентоспособные цены и скидки постоянным клиентам.*
- *Специальные условия для постоянных клиентов.*
- *Подбор аналогов.*
- *Поставку компонентов в любых объемах, удовлетворяющих вашим потребностям.*

- *Приемлемые сроки поставки, возможна ускоренная поставка.*
- *Доставку товара в любую точку России и стран СНГ.*
- *Комплексную поставку.*
- *Работу по проектам и поставку образцов.*
- *Формирование склада под заказчика.*

- *Сертификаты соответствия на поставляемую продукцию (по желанию клиента).*
- *Тестирование поставляемой продукции.*
- *Поставку компонентов, требующих военную и космическую приемку.*
- *Входной контроль качества.*
- *Наличие сертификата ISO.*

В составе нашей компании организован Конструкторский отдел, призванный помогать разработчикам, и инженерам.

Конструкторский отдел помогает осуществить:

- *Регистрацию проекта у производителя компонентов.*
- *Техническую поддержку проекта.*
- *Защиту от снятия компонента с производства.*
- *Оценку стоимости проекта по компонентам.*
- *Изготовление тестовой платы монтаж и пусконаладочные работы.*

Тел: +7 (812) 336 43 04 (многоканальный)
Email: org@lifeelectronics.ru

www.lifeelectronics.ru