HI-200, HI-201

Dual/Quad SPST, CMOS Analog Switches

FN3121
Rev 9.00
September 15, 2015

HI-200/HI-201 (dual/quad) are monolithic devices comprising independently selectable SPST switches which feature fast switching speeds (HI-200 240ns, and HI-201 185ns) combined with low power dissipation (15mW at 25°C). Each switch provides low “ON” resistance operation for input signal voltage up to the supply rails and for signal current up to 80mA. Rugged DI construction eliminates latch-up and substrate SCR failure modes.

All devices provide break-before-make switching and are TTL and CMOS compatible for maximum application versatility. HI-200/HI-201 are ideal components for use in high frequency analog switching. Typical applications include signal path switching, sample and hold circuit, digital filters, and operational amplifier gain switching networks.

Ordering Information

PART NUMBER	TEMP. RANGE (°C)	PACKAGE	PKG. DWG. #
HI3-0200-5Z (Note) **(No longer available or supported)**	0 to 75	14 Ld PDIP* (Pb-free)	E14.3
HI1-0201-2	-55 to 125	16 Ld CERDIP	F16.3
HI3-0201-5Z (Note)	0 to 75	16 Ld PDIP* (Pb-free)	E16.3
HI4P0201-5Z (Note) **(No longer available or supported)**	0 to 75	20 Ld PLCC (Pb-free)	N20.35
HI9P0201-5Z (Note)	0 to 75	16 Ld SOIC (Pb-free)	M16.15
HI9P0201-9Z (Note)	-40 to 85	16 Ld SOIC (Pb-free)	M16.15

*Pb-free PDIPs can be used for through hole wave solder processing only. They are not intended for use in Reflow solder processing applications.

NOTE: Intersil Pb-free products employ special Pb-free material sets; molding compounds/die attach materials and 100% matte tin plate termination finish, which are RoHS compliant and compatible with both SnPb and Pb-free soldering operations. Intersil Pb-free products are MSL classified at Pb-free peak reflow temperatures that meet or exceed the Pb-free requirements of IPC/JEDEC J STD-020. Pb-free PDIPs can be used for through hole wave solder processing only. They are not intended for use in Reflow solder processing applications.

Features

- Pb-Free Available (RoHS Compliant)
- Analog Voltage Range . . . . . ±15V
- Analog Current Range 80mA
- Turn-On Time 240ns
- Low r_{ON} 55Ω
- Low Power Dissipation 15mW
- TTL/CMOS Compatible

Applications

- High Frequency Analog Switching
- Sample and Hold Circuits
- Digital Filters
- Operational Amplifier Gain Switching Networks

Functional Diagram

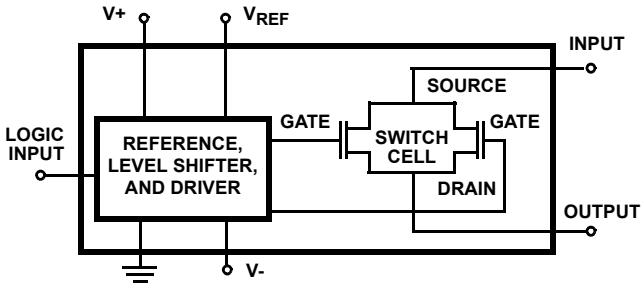

TRUTH TABLE

LOGIC	HI-200	HI-201
0	ON	ON
1	OFF	OFF

Pinouts (Switches Shown For Logic “1” Input)

HI-200 (PDIP)
TOP VIEW

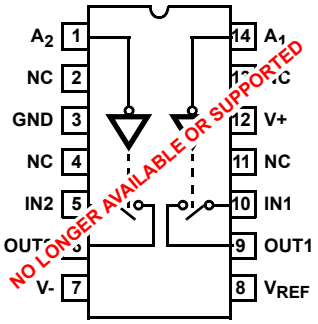

HI-201 (CERDIP, PDIP, SOIC)
TOP VIEW

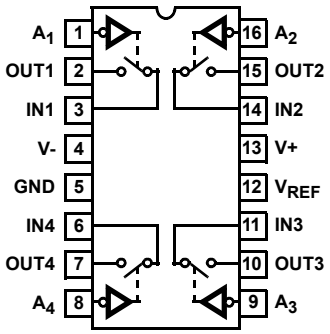

HI-201 (PLCC)
TOP VIEW

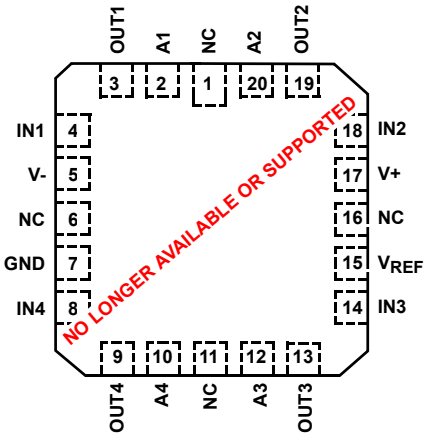

Schematic Diagrams

TTL/CMOS REFERENCE CIRCUIT V_{REF} CELL
HI-200

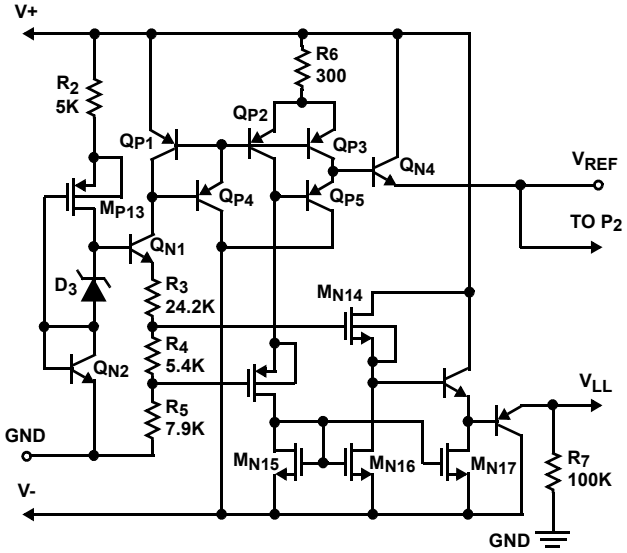

TTL/CMOS REFERENCE CIRCUIT V_{REF} CELL
HI-201

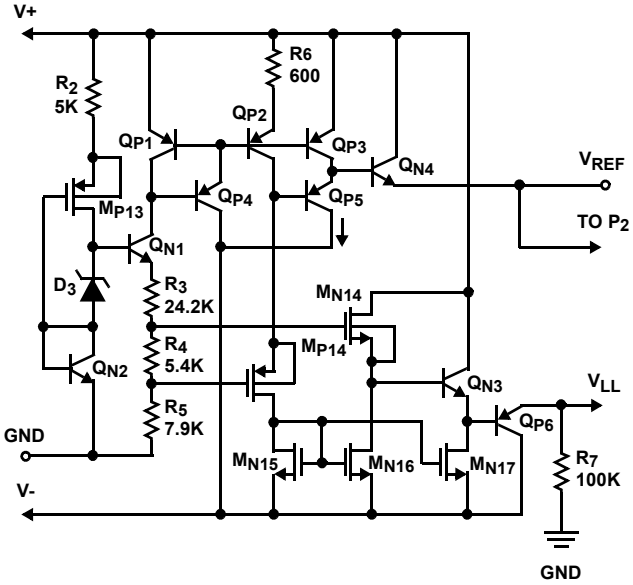

Schematic Diagrams (Continued)

SWITCH CELL

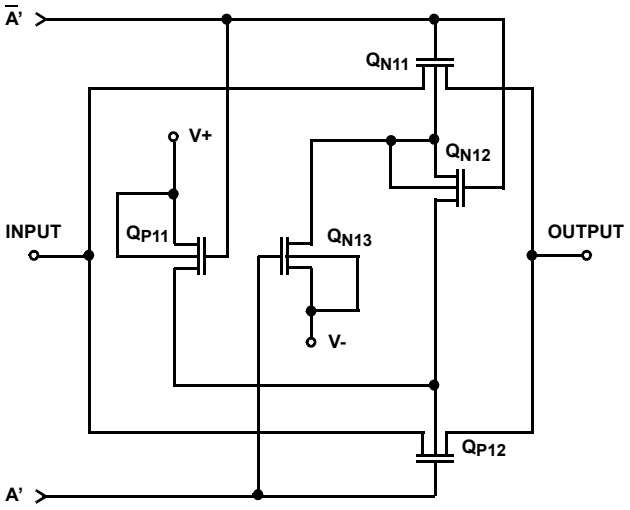

DIGITAL INPUT BUFFER AND LEVEL SHIFTER

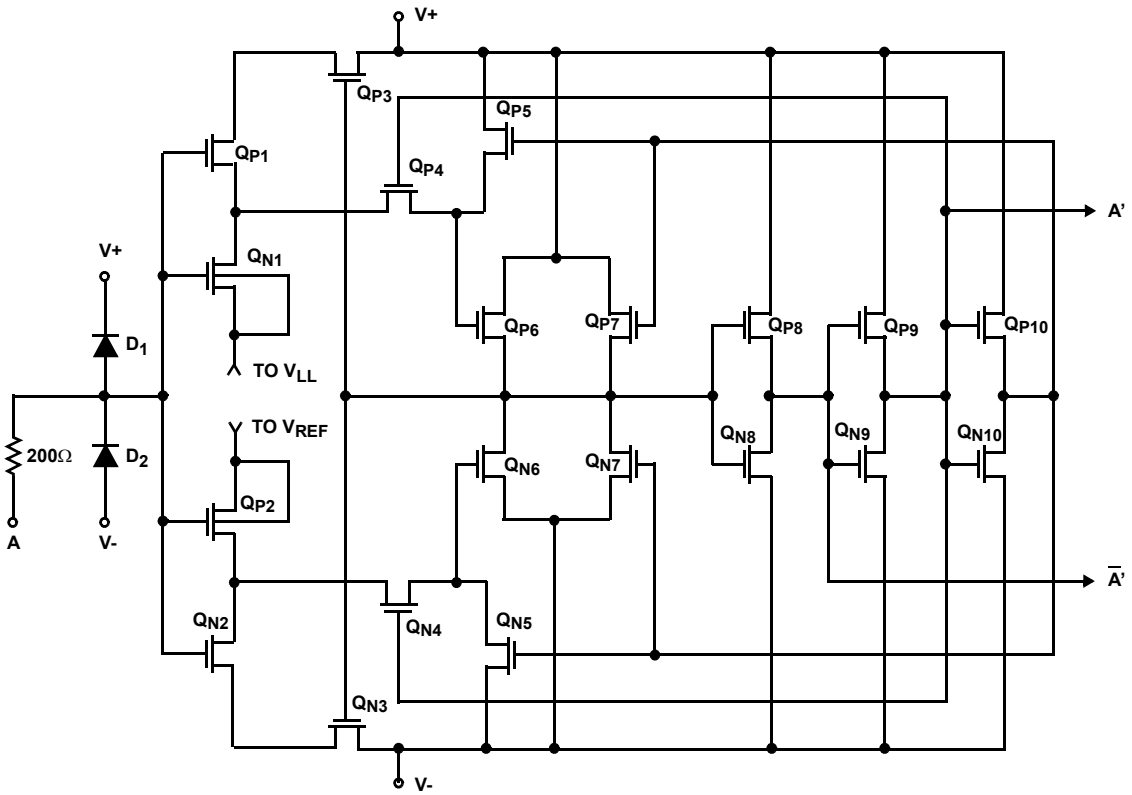

Absolute Maximum Ratings

Supply Voltage (V+ to V-) . . . . . 44V (±22)
V_{REF} to Ground . . . . . 20V, -5V
Digital Input Voltage . . . . . (V+) +4V to (V-) -4V
Analog Input Voltage (One Switch) . . . . . (V+) +2V to (V-) -2V

Operating Conditions

Temperature Ranges
HI-201-2 . . . . . -55°C to 125°C
HI-201-4 . . . . . -25°C to 85°C
HI-200-5, HI-201-5 . . . . . 0°C to 75°C
HI-201-9 . . . . . -40°C to 85°C

Thermal Information

Thermal Resistance (Typical, Note 1)	θ_{JA} (°C/W)	θ_{JC} (°C/W)
CERDIP Package	75	20
PLCC Package	80	N/A
PDIP Package*	95	N/A
SOIC Package	110	N/A

Maximum Storage Temperature . . . . . -65°C to 150°C
Maximum Junction Temperature (Hermetic Packages) . . . . . 175°C
Maximum Junction Temperature (Plastic Packages) . . . . . 150°C
Maximum Lead Temperature (Soldering, 10s) . . . . . 300°C
(PLCC and SOIC - Lead Tips Only)

*Pb-free PDIPs can be used for through hole wave solder processing only. They are not intended for use in reflow solder processing applications.

CAUTION: Stresses above those listed in "Absolute Maximum Ratings" may cause permanent damage to the device. This is a stress only rating and operation of the device at these or any other conditions above those indicated in the operational sections of this specification is not implied.

NOTE:

1. θ_{JA} is measured with the component mounted on an evaluation PC board in free air.

Electrical Specifications

Supplies = +15V, -15V; V_{REF} = Open; V_{AH} (Logic Level High) = 2.4V, VAL (Logic Level Low) = 0.8V

PARAMETER	TEST CONDITIONS	TEMP (°C)	-2			-4, -5, -9			UNITS
			MIN	TYP	MAX	MIN	TYP	MAX	
DYNAMIC CHARACTERISTICS									
Switch ON Time, t_{ON}									
HI-200		25	-	240	500	-	240	-	ns
HI-201		25	-	185	500	-	185	-	ns
		Full	-	1000	-	-	1000	-	ns
Switch OFF Time, t_{OFF}									
HI-200		25	-	330	500	-	500	-	ns
HI-201		25	-	220	500	-	220	-	ns
		Full	-	1000	-	-	1000	-	ns
Off Isolation	(Note 4)								
HI-200		25	-	70	-	-	70	-	dB
HI-201		25	-	80	-	-	80	-	dB
Input Switch Capacitance, $C_{S(OFF)}$		25	-	5.5	-	-	5.5	-	pF
Output Switch Capacitance, $C_{D(OFF)}$		25	-	5.5	-	-	5.5	-	pF
Output Switch Capacitance, $C_{D(ON)}$		25	-	11	-	-	11	-	pF
Digital Input Capacitance, C_A		25	-	5	-	-	5	-	pF
Drain-to-Source Capacitance, $C_{DS(OFF)}$		25	-	0.5	-	-	0.5	-	pF
DIGITAL INPUT CHARACTERISTICS									
Input Low Threshold, V_{AL}		Full	-	-	0.8	-	-	0.8	V
Input High Threshold, V_{AH}		Full	2.4	-	-	2.4	-	-	V
Input Leakage Current (High or Low), I_A	(Note 3)	Full	-	-	1.0	-	-	1.0	µA
ANALOG SWITCH CHARACTERISTICS									
Analog Signal Range, V_S		Full	-15	-	+15	-15	-	+15	V
ON Resistance, r_{ON}	(Note 2)	25	-	55	70	-	55	80	Ω
		Full	-	80	100	-	72	100	Ω

Electrical Specifications Supplies = +15V, -15V; V_{REF} = Open; V_{AH} (Logic Level High) = 2.4V, VAL (Logic Level Low) = 0.8V **(Continued)**

PARAMETER	TEST CONDITIONS	TEMP (°C)	-2			-4, -5, -9			UNITS
			MIN	TYP	MAX	MIN	TYP	MAX	
OFF Input Leakage Current, $I_{S(OFF)}$	(Note 6)	25	-	1	5	-	1	50	nA
HI-200		Full	-	100	500	-	10	500	nA
HI-201		25	-	2	5	-	2	50	nA
		Full	-	-	500	-	-	250	nA
OFF Output Leakage Current, $I_{D(OFF)}$	(Note 6)	25	-	1	5	-	1	50	nA
HI-200		Full	-	100	500	-	10	500	nA
HI-201		25	-	2	5	-	2	50	nA
		Full	-	35	500	-	35	250	nA
ON Leakage Current, $I_{D(ON)}$	(Note 6)	25	-	1	5	-	1	50	nA
HI-200		Full	-	100	500	-	10	500	nA
HI-201		25	-	2	5	-	2	50	nA
		Full	-	-	500	-	-	250	nA
POWER SUPPLY CHARACTERISTICS (Note 5)									
Power Dissipation, P_D		25	-	15	-	-	15	-	mW
		Full	-	-	60	-	-	60	mW
Current, I+		25	-	0.5	-	-	0.5	-	mA
		Full	-	-	2.0	-	-	2.0	mA
Current, I-		25	-	0.5	-	-	0.5	-	mA
		Full	-	-	2.0	-	-	2.0	mA

NOTES:

2. V_{OUT} = ±10V, I_{OUT} = 1mA.
3. Digital Inputs are MOS gates: typical leakage is < 1nA.
4. V_A = 5V, R_L = 1kΩ, C_L = 10pF, V_S = $3V_{RMS}$, f = 100kHz.
5. V_A = +3V or V_A = 0V for Both Switches.
6. Refer to Leakage Current Measurements (Figure 2).

Test Circuits and Waveforms T_A = 25°C, V_{SUPPLY} = ±±15V, V_{AH} = 2.4V, V_{AL} = 0.8V and V_{REF} = Open

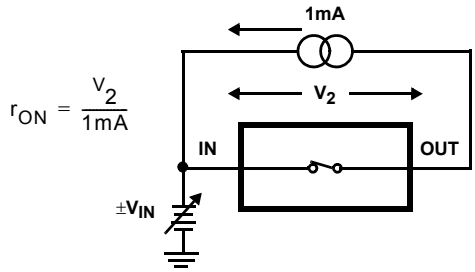

FIGURE 1A. ON RESISTANCE TEST CIRCUIT

Test Circuits and Waveforms $T_A = 25^oC$, $V_{SUPPLY} = \pm\pm15V$, $V_{AH} = 2.4V$, $V_{AL} = 0.8V$ and V_{REF} = Open **(Continued)**

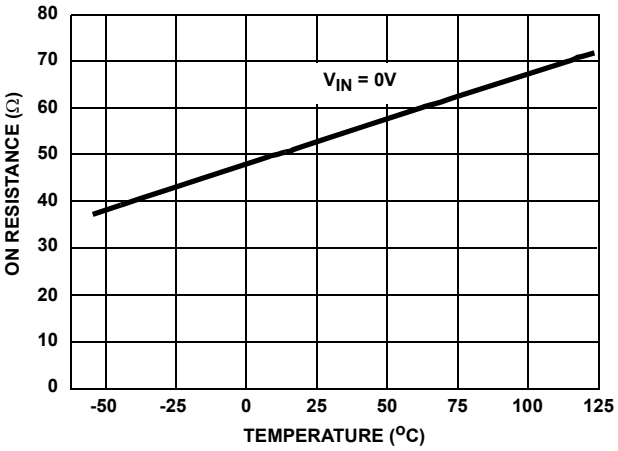

FIGURE 1B. ON RESISTANCE vs TEMPERATURE

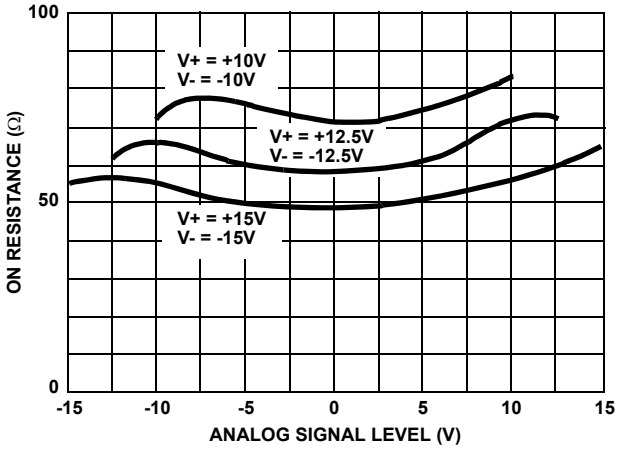

FIGURE 1C. HI-200 ON RESISTANCE vs ANALOG SIGNAL LEVEL

FIGURE 1. ON RESISTANCE

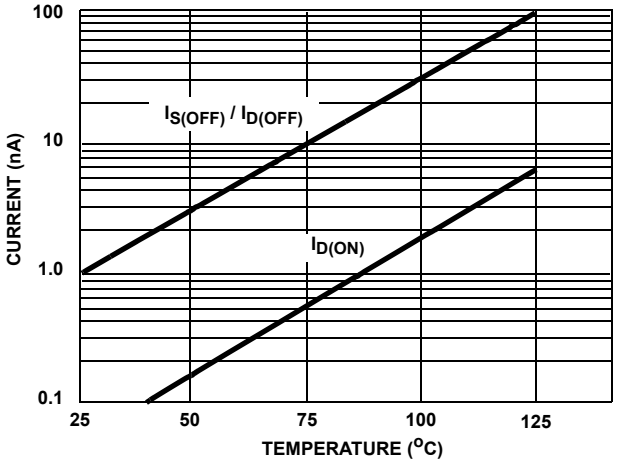

FIGURE 2A. LEAKAGE CURRENT vs TEMPERATURE

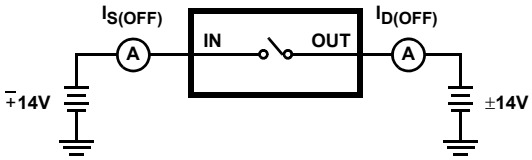

FIGURE 2B. OFF LEAKAGE CURRENT TEST CIRCUIT

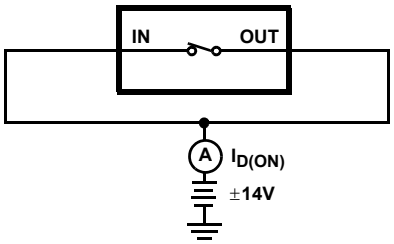

FIGURE 2C. ON LEAKAGE CURRENT TEST CIRCUIT

FIGURE 2. LEAKAGE CURRENTS

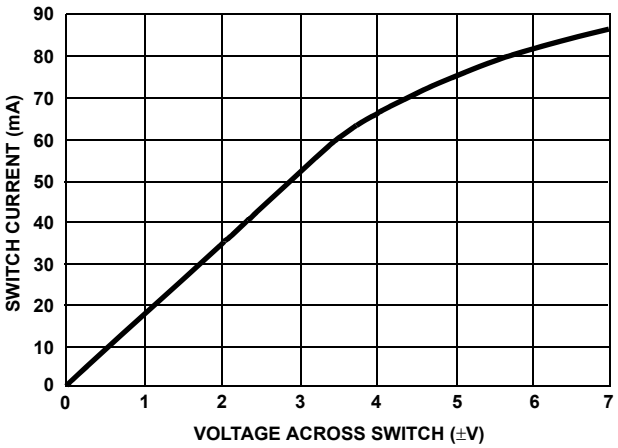

FIGURE 3A. SWITCH CURRENT vs VOLTAGE

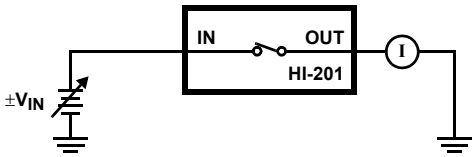

FIGURE 3B. TEST CIRCUIT

FIGURE 3. SWITCH CURRENT

Test Circuits and Waveforms $T_A = 25^oC$, $V_{SUPPLY} = \pm\pm15V$, $V_{AH} = 2.4V$, $V_{AL} = 0.8V$ and V_{REF} = Open **(Continued)**

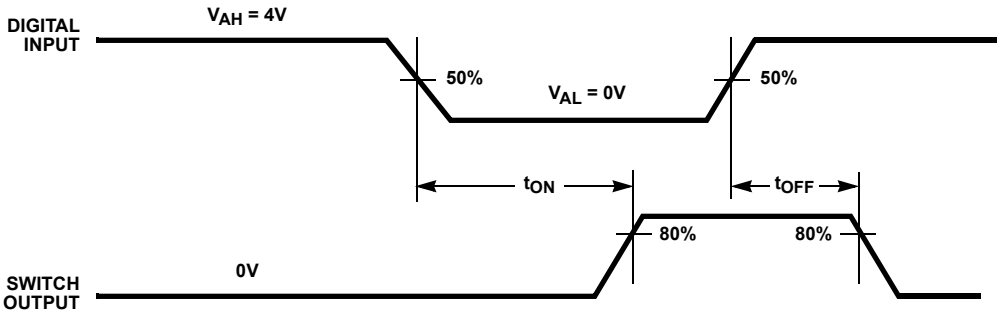

FIGURE 4A. MEASUREMENT POINTS

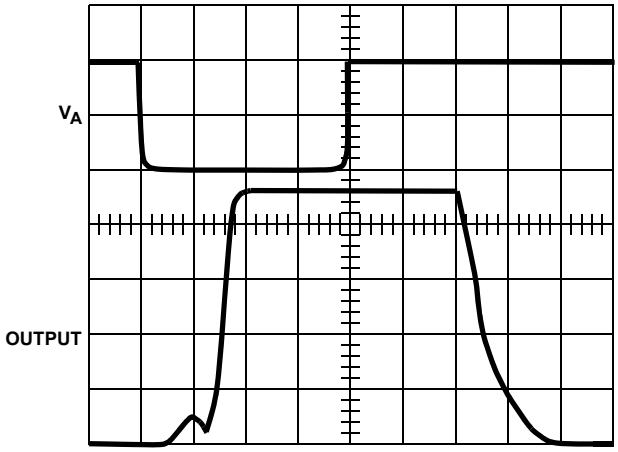

V_A = 0 to 4V
Vertical: 2V/Div.
Horizontal: 100ns/Div.

FIGURE 4B. WAVEFORMS WITH TTL COMPATIBLE LOGIC INPUT

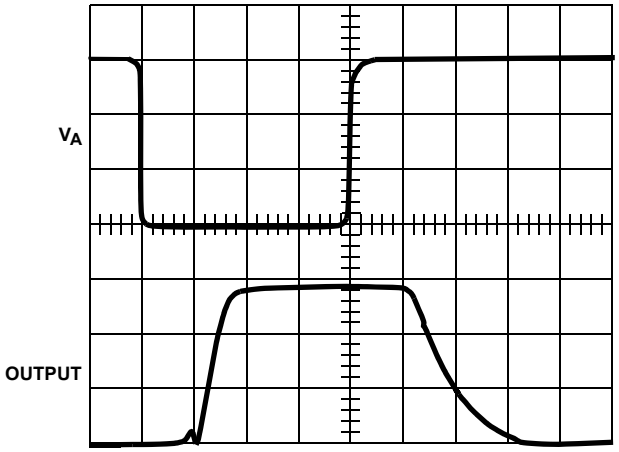

V_A = 0 to 15V
Vertical: 5V/Div.
Horizontal: 100ns/Div.

FIGURE 4C. WAVEFORMS WITH CMOS COMPATIBLE LOGIC INPUT

FIGURE 4. SWITCH t_{ON} AND t_{OFF}

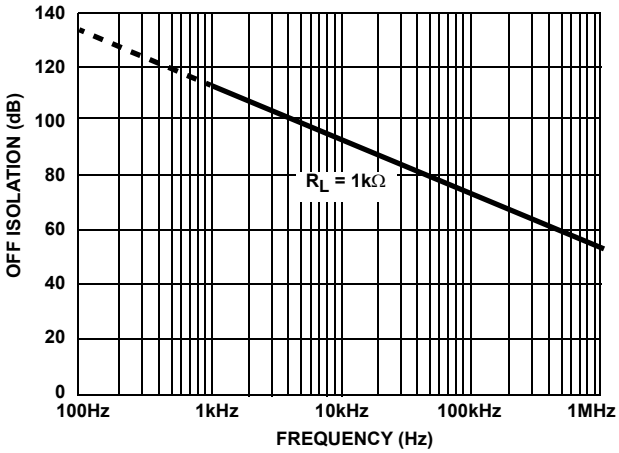

FIGURE 5. HI-201 OFF ISOLATION vs FREQUENCY

For more information see Application Notes AN520, AN521, AN531, AN532 and AN557.

Application Information

Single Supply Operation

The switch operation of the HI-200/201 is dependent upon an internally generated switching threshold voltage optimized for ±15V power supplies. The HI-200/201 does not provide the necessary internal switching threshold in a single supply system. Therefore, if single supply operation is required, the HI-300 series of switches is recommended. The HI-300 series will remain operational to a minimum +5V single supply.

Switch performance will degrade as power supply voltage is reduced from optimum levels (±15V). So it is recommended that a single supply design be thoroughly evaluated to ensure that the switch will meet the requirements of the application.

For further information see Application Notes AN520, AN557, AN1033 and AN1034.

Die Characteristics

METALLIZATION:

Type: CuAl
Thickness: 16kÅ ±2kÅ

PASSIVATION:

Type: Nitride over Silox
Nitride Thickness: 3.5kÅ ±1kÅ
Silox Thickness: 12kÅ ±2kÅ

WORST CASE CURRENT DENSITY:

2 x 10^5 A/cm^2 at 25mA

Metallization Mask Layout

HI-200

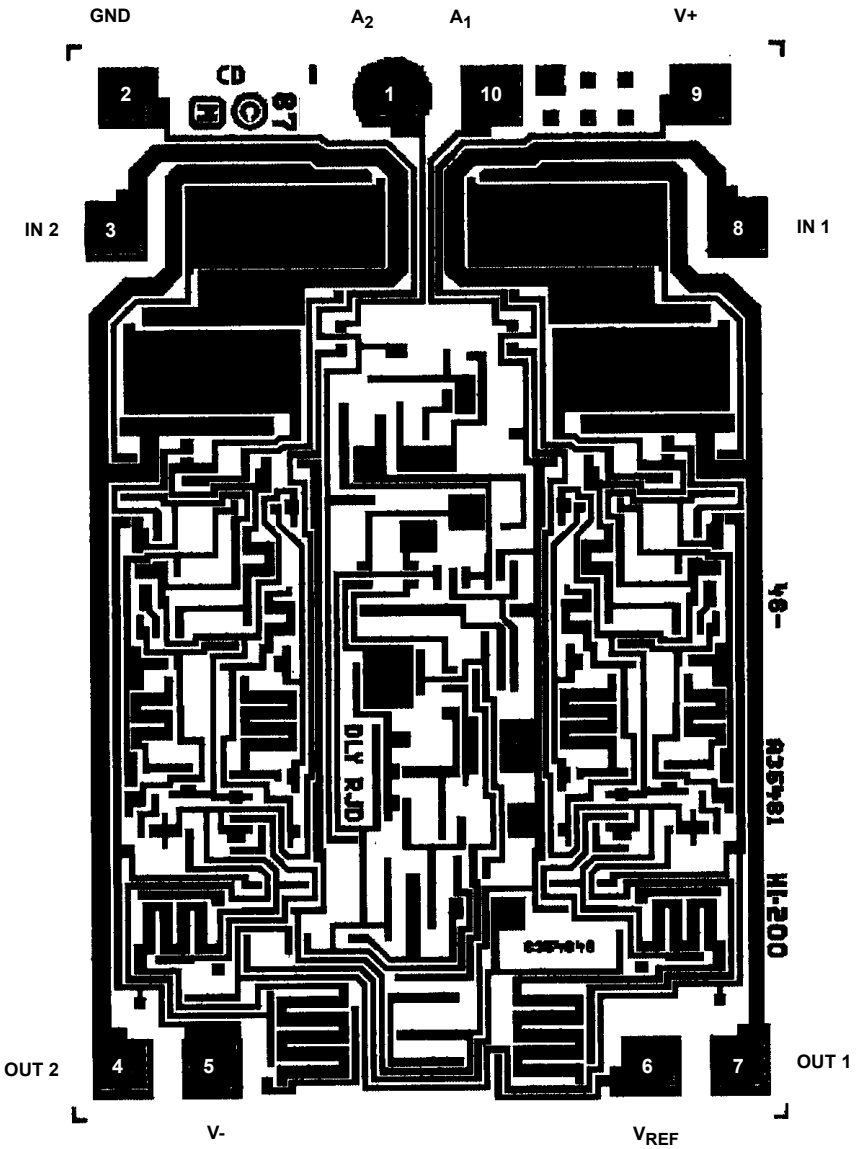

Die Characteristics

METALLIZATION:

Type: CuAl
Thickness: 16kÅ ±2kÅ

PASSIVATION:

Type: Nitride over Silox
Nitride Thickness: 3.5kÅ ±1kÅ
Silox Thickness: 12kÅ ±2kÅ

WORST CASE CURRENT DENSITY:

2×10^5 A/cm^2 at 25mA

Metallization Mask Layout

HI-201

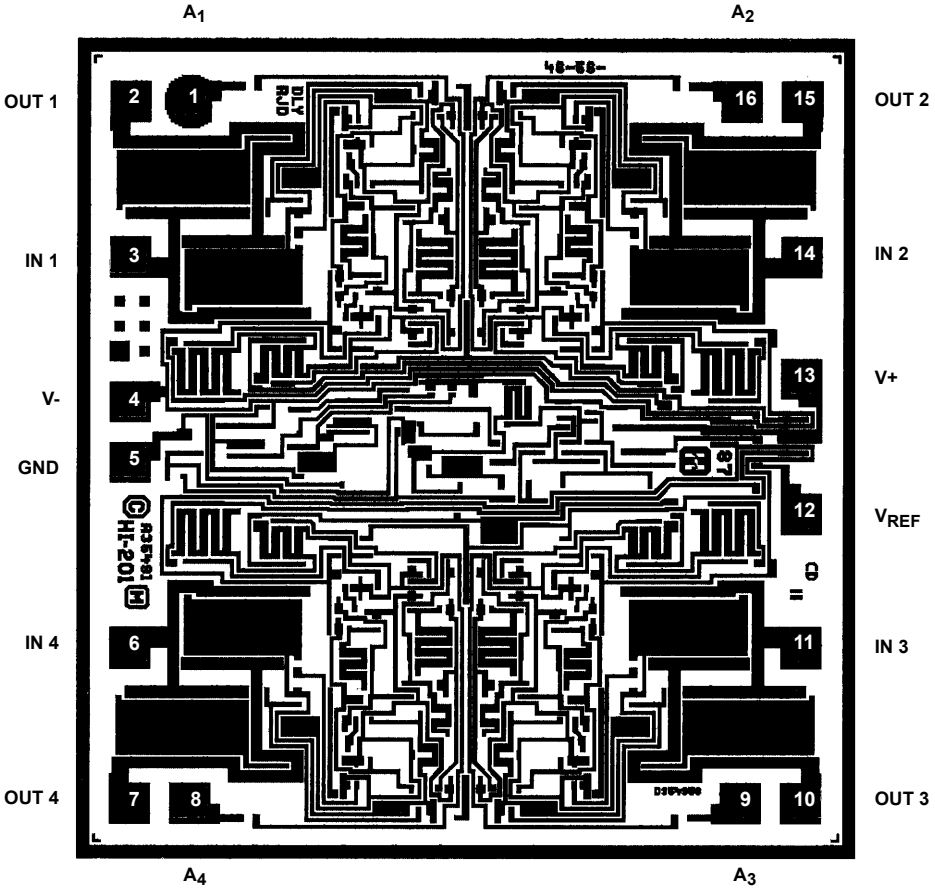

© Copyright Intersil Americas LLC 1999-2015. All Rights Reserved.
All trademarks and registered trademarks are the property of their respective owners.

For additional products, see www.intersil.com/en/products.html

Intersil products are manufactured, assembled and tested utilizing ISO9001 quality systems as noted in the quality certifications found at www.intersil.com/en/support/qualandreliability.html

Intersil products are sold by description only. Intersil may modify the circuit design and/or specifications of products at any time without notice, provided that such modification does not, in Intersil's sole judgment, affect the form, fit or function of the product. Accordingly, the reader is cautioned to verify that datasheets are current before placing orders. Information furnished by Intersil is believed to be accurate and reliable. However, no responsibility is assumed by Intersil or its subsidiaries for its use; nor for any infringements of patents or other rights of third parties which may result from its use. No license is granted by implication or otherwise under any patent or patent rights of Intersil or its subsidiaries.

For information regarding Intersil Corporation and its products, see www.intersil.com

Revision History

The revision history provided is for informational purposes only and is believed to be accurate, but not warranted. Please go to the web to make sure that you have the latest revision.

DATE	REVISION	CHANGE
September 15, 2015	FN3121.9	- Updated Ordering Information Table on page 1. - Added Revision History. - Added About Intersil Verbiage.

About Intersil

Intersil Corporation is a leading provider of innovative power management and precision analog solutions. The company's products address some of the largest markets within the industrial and infrastructure, mobile computing and high-end consumer markets.

For the most updated datasheet, application notes, related documentation and related parts, please see the respective product information page found at www.intersil.com.

You may report errors or suggestions for improving this datasheet by visiting www.intersil.com/ask.

Reliability reports are also available from our website at www.intersil.com/support.

ООО «ЛайфЭлектроникс» “LifeElectronics” LLC

ИНН 7805602321 КПП 780501001 Р/С 40702810122510004610 ФАКБ "АБСОЛЮТ БАНК" (ЗАО) в г.Санкт-Петербурге К/С 30101810900000000703 БИК 044030703

Компания «Life Electronics» занимается поставками электронных компонентов импортного и отечественного производства от производителей и со складов крупных дистрибьюторов Европы, Америки и Азии.

С конца 2013 года компания активно расширяет линейку поставок компонентов по направлению коаксиальный кабель, кварцевые генераторы и конденсаторы (керамические, пленочные, электролитические), за счёт заключения дистрибьюторских договоров

Мы предлагаем:

- *Конкурентоспособные цены и скидки постоянным клиентам.*
- *Специальные условия для постоянных клиентов.*
- *Подбор аналогов.*
- *Поставку компонентов в любых объемах, удовлетворяющих вашим потребностям.*

- *Приемлемые сроки поставки, возможна ускоренная поставка.*
- *Доставку товара в любую точку России и стран СНГ.*
- *Комплексную поставку.*
- *Работу по проектам и поставку образцов.*
- *Формирование склада под заказчика.*

- *Сертификаты соответствия на поставляемую продукцию (по желанию клиента).*
- *Тестирование поставляемой продукции.*
- *Поставку компонентов, требующих военную и космическую приемку.*
- *Входной контроль качества.*
- *Наличие сертификата ISO.*

В составе нашей компании организован Конструкторский отдел, призванный помогать разработчикам, и инженерам.

Конструкторский отдел помогает осуществить:

- *Регистрацию проекта у производителя компонентов.*
- *Техническую поддержку проекта.*
- *Защиту от снятия компонента с производства.*
- *Оценку стоимости проекта по компонентам.*
- *Изготовление тестовой платы монтаж и пусконаладочные работы.*

Тел: +7 (812) 336 43 04 (многоканальный)
Email: org@lifeelectronics.ru

www.lifeelectronics.ru