MC10E445, MC100E445

5V ECL 4-Bit Serial/Parallel Converter

ON Semiconductor®

http://onsemi.com

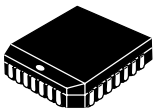

PLCC−28
FN SUFFIX
CASE 776

MARKING DIAGRAM*

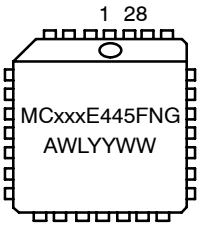

xxx	= 10 or 100
A	= Assembly Location
WL	= Wafer Lot
YY	= Year
WW	= Work Week
G	= Pb−Free Package

*For additional marking information, refer to Application Note AND8002/D.

ORDERING INFORMATION

See detailed ordering and shipping information in the package dimensions section on page 11 of this data sheet.

Description

The MC10/100E445 is an integrated 4-bit serial to parallel data converter. The device is designed to operate for NRZ data rates of up to 2.0 Gb/s. The chip generates a divide by 4 and a divide by 8 clock for both 4-bit conversion and a two chip 8-bit conversion function. The conversion sequence was chosen to convert the first serial bit to Q0, the second to Q1 etc.

Two selectable serial inputs provide a loopback capability for testing purposes when the device is used in conjunction with the E446 parallel to serial converter.

The start bit for conversion can be moved using the SYNC input. A single pulse applied asynchronously for at least two input clock cycles shifts the start bit for conversion from Qn to Qn−1. For each additional shift required an additional pulse must be applied to the SYNC input. Asserting the SYNC input will force the internal clock dividers to "swallow" a clock pulse, effectively shifting a bit from the Qn to the Qn−1 output (see Timing Diagram B).

The MODE input is used to select the conversion mode of the device. With the MODE input LOW, or open, the device will function as a 4-bit converter. When the mode input is driven HIGH the data on the output will change on every eighth clock cycle thus allowing for an 8-bit conversion scheme using two E445's. When cascaded in an 8-bit conversion scheme the devices will not operate at the 2.0 Gb/s data rate of a single device. Refer to the applications section of this data sheet for more information on cascading the E445.

Upon power-up the internal flip-flops will attain a random state. To synchronize multiple E445's in a system the master reset must be asserted.

The V_{BB} pin, an internally generated voltage supply, is available to this device only. For single-ended input conditions, the unused differential input is connected to V_{BB} as a switching reference voltage. V_{BB} may also rebias AC coupled inputs. When used, decouple V_{BB} and V_{CC} via a 0.01 μF capacitor and limit current sourcing or sinking to 0.5 mA. When not used, V_{BB} should be left open.

The 100 Series contains temperature compensation.

Features

- On-Chip Clock ÷4 and ÷8
- 2.0 Gb/s Data Rate Capability
- Differential Clock and Serial Inputs
- V_{BB} Output for Single-Ended Input Applications
- Asynchronous Data Synchronization
- Mode Select to Expand to 8-Bits
- PECL Mode Operating Range: V_{CC} = 4.2 V to 5.7 V with V_{EE} = 0 V
- NECL Mode Operating Range: V_{CC} = 0 V with V_{EE} = −4.2 V to −5.7 V
- Internal Input 50 kΩ Pulldown Resistors
- ESD Protection: Human Body Model; > 2 kV, Machine Model; > 100 V
- Meets or Exceeds JEDEC Spec EIA/JESD78 IC Latchup Test
- Moisture Sensitivity Level: Pb = 1; Pb−Free = 3 For Additional Information, see Application Note AND8003/D
- Flammability Rating: UL 94 V−0 @ 0.125 in, Oxygen Index: 28 to 34
- Transistor Count = 528 devices
- PECL Mode Operating Range: V_{CC} = 4.2 V to 5.7 V with V_{EE} = 0 V
- Pb−Free Packages are Available*

*For additional information on our Pb−Free strategy and soldering details, please download the ON Semiconductor Soldering and Mounting Techniques Reference Manual, SOLDERRM/D.

© Semiconductor Components Industries, LLC, 2006

November, 2006 − Rev. 12

Publication Order Number:
MC10E445/D

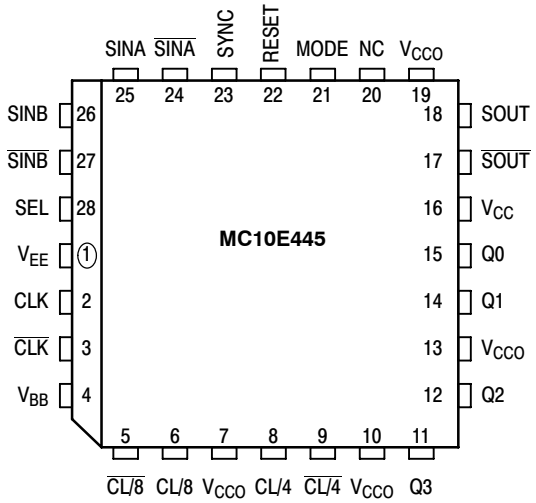

* All V_{CC} and V_{CCO} pins are tied together on the die.

Warning: All V_{CC}, V_{CCO}, and V_{EE} pins must be externally connected to Power Supply to guarantee proper operation.

Figure 1. Pinout: PLCC−28 (Top View)

Table 1. PIN DESCRIPTION

PIN	FUNCTION
SINA, SINA	ECL Differential Serial Data Input A
SINB, SINB	ECL Differential Serial Data Input B
SEL	ECL Serial Input Selector Pin
Q0−Q3	ECL Parallel Data Outputs
CLK, CLK	ECL Differential Clock Inputs
CL/4, CL/4	ECL Differential ÷4 Clock Output
CL/8, CL/8	ECL Differential ÷8 Clock Output
MODE	ECL Conversion Mode 4-Bit/8-Bit
SYNCH	ECL Conversion Synchronizing Input
V_{BB}	Reference Voltage Output
V_{CC}, V_{CCO}	Positive Supply
V_{EE}	Negative Supply
NC	No Connect

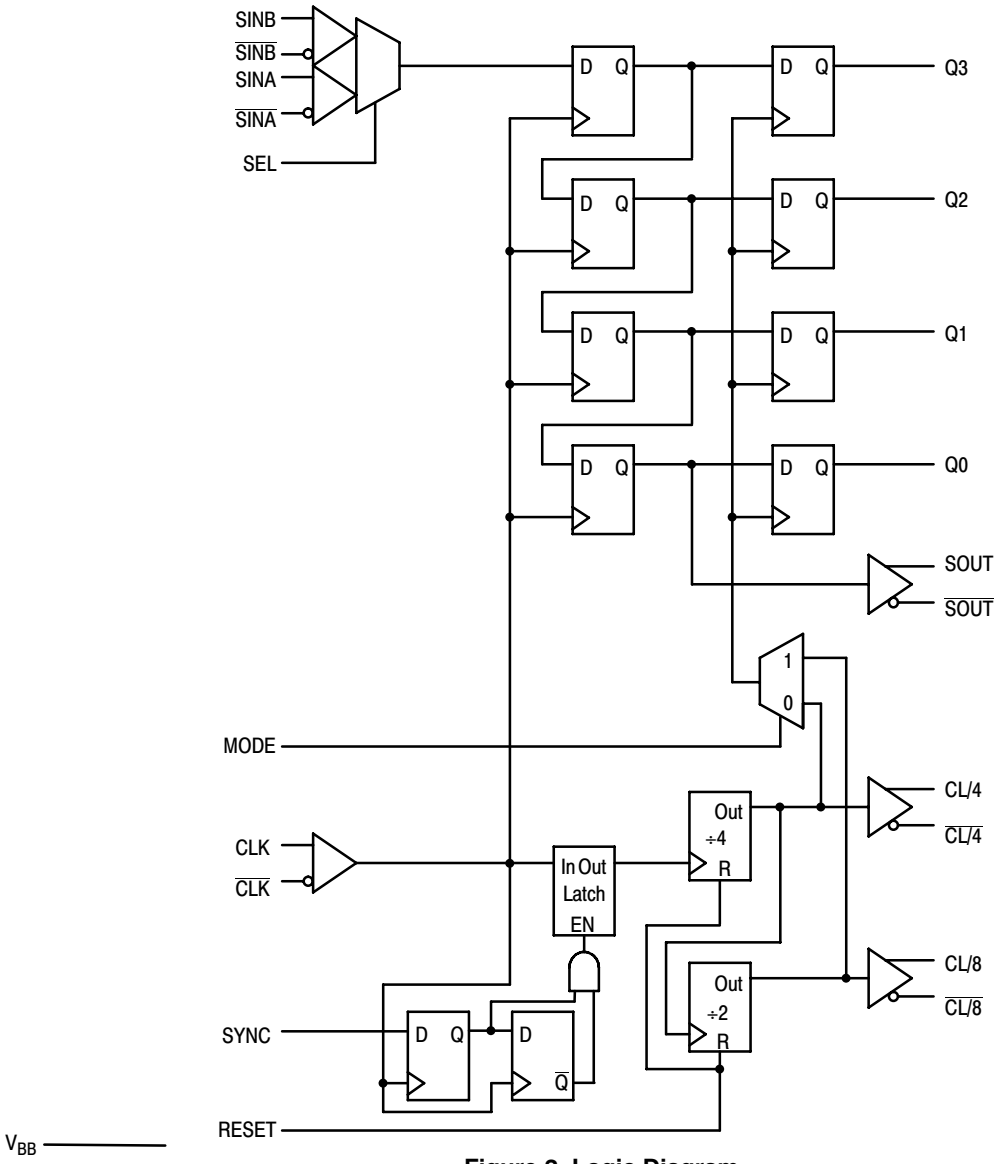

Figure 2. Logic Diagram

Table 2. FUNCTION TABLES

Mode	Conversion	SEL	Serial Input
L	4-Bit	H	A
H	8-Bit	L	B

Table 3. MAXIMUM RATINGS

Symbol	Parameter	Condition 1	Condition 2	Rating	Unit
V_{CC}	PECL Mode Power Supply	V_{EE} = 0 V		8	V
V_I	PECL Mode Input Voltage NECL Mode Input Voltage	V_{EE} = 0 V V_{CC} = 0 V	$V_I \le V_{CC}$ $V_I \ge V_{EE}$	6 −6	V V
I_{out}	Output Current	Continuous Surge		50 100	mA mA
I_{BB}	V_{BB} Sink/Source			± 0.5	mA
T_A	Operating Temperature Range			0 to +85	°C
T_{stg}	Storage Temperature Range			−65 to +150	°C
θ_{JA}	Thermal Resistance (Junction−to−Ambient)	0 lfpm 500 lfpm	PLCC−28 PLCC−28	63.5 43.5	°C/W °C/W
θ_{JC}	Thermal Resistance (Junction−to−Case)	Standard Board	PLCC−28	22 to 26	°C/W
T_{sol}	Wave Solder Pb Pb−Free			265 265	°C

Stresses exceeding Maximum Ratings may damage the device. Maximum Ratings are stress ratings only. Functional operation above the Recommended Operating Conditions is not implied. Extended exposure to stresses above the Recommended Operating Conditions may affect device reliability.

Table 4. 10E SERIES PECL DC CHARACTERISTICS V_{CCx} = 5.0 V; V_{EE} = 0.0 V (Note 1)

Symbol	Characteristic	0°C			25°C			85°C			Unit
		Min	Typ	Max	Min	Typ	Max	Min	Typ	Max	
I_{EE}	Power Supply Current		154	185		154	185		154	185	mA
V_{OH}	Output HIGH Voltage (Note 2)	3980	4070	4160	4020	4105	4190	4090	4185	4280	mV
VOH_{sout}	Output HIGH Voltage sout/$\overline{sout}$	3975		4170	3975		4170	3975		4170	mV
V_{OL}	Output LOW Voltage (Note 2)	3050	3210	3370	3050	3210	3370	3050	3227	3405	mV
V_{IH}	Input HIGH Voltage (Single−Ended)	3830	3995	4160	3870	4030	4190	3940	4110	4280	mV
V_{IL}	Input LOW Voltage (Single−Ended)	3050	3285	3520	3050	3285	3520	3050	3302	3555	mV
V_{BB}	Output Voltage Reference	3.62		3.74	3.65		3.75	3.69		3.81	V
V_{IHCMR}	Input HIGH Voltage Common Mode Range (Differential Configuration) (Note 3)	2.2		4.6	2.2		4.6	2.2		4.6	V
I_{IH}	Input HIGH Current			150			150			150	μA
I_{IL}	Input LOW Current	0.5	0.3		0.5	0.25		0.3	0.2		μA

NOTE: Device will meet the specifications after thermal equilibrium has been established when mounted in a test socket or printed circuit board with maintained transverse airflow greater than 500 lfpm. Electrical parameters are guaranteed only over the declared operating temperature range. Functional operation of the device exceeding these conditions is not implied. Device specification limit values are applied individually under normal operating conditions and not valid simultaneously.

1. Input and output parameters vary 1:1 with V_{CC}. V_{EE} can vary −0.46 V / +0.06 V.
2. Outputs are terminated through a 50 Ω resistor to V_{CC} − 2.0 V.
3. V_{IHCMR} min varies 1:1 with V_{EE}, max varies 1:1 with V_{CC}.

Table 5. 10E SERIES NECL DC CHARACTERISTICS V_{CCx} = 0.0 V; V_{EE} = −5.0 V (Note 4)

Symbol	Characteristic	0°C			25°C			85°C			Unit
		Min	Typ	Max	Min	Typ	Max	Min	Typ	Max	
I_{EE}	Power Supply Current		154	185		154	185		154	185	mA
V_{OH}	Output HIGH Voltage (Note 5)	−1020	−930	−840	−980	−895	−810	−910	−815	−720	mV
VOH_{sout}	Output HIGH Voltage sout/$\overline{sout}$	−1025		−830	−1025		−830	−1025		−830	mV
V_{OL}	Output LOW Voltage (Note 5)	−1950	−1790	−1630	−1950	−1790	−1630	−1950	−1773	−1595	mV
V_{IH}	Input HIGH Voltage (Single−Ended)	−1170	−1005	−840	−1130	−970	−810	−1060	−970	−720	mV
V_{IL}	Input LOW Voltage (Single−Ended)	−1950	−1715	−1480	−1950	−1715	−1480	−1950	−1698	−1445	mV
V_{BB}	Output Voltage Reference	−1.38		−1.27	−1.35		−1.25	−1.31		−1.19	V
V_{IHCMR}	Input HIGH Voltage Common Mode Range (Differential Configuration) (Note 6)	−2.8		−0.4	−2.8		−0.4	−2.8		−0.4	V
I_{IH}	Input HIGH Current			150			150			150	μA
I_{IL}	Input LOW Current	0.5	0.3		0.5	0.065		0.3	0.2		μA

NOTE: Device will meet the specifications after thermal equilibrium has been established when mounted in a test socket or printed circuit board with maintained transverse airflow greater than 500 lfpm. Electrical parameters are guaranteed only over the declared operating temperature range. Functional operation of the device exceeding these conditions is not implied. Device specification limit values are applied individually under normal operating conditions and not valid simultaneously.

4. Input and output parameters vary 1:1 with V_{CC}. V_{EE} can vary −0.46 V / +0.06 V.
5. Outputs are terminated through a 50 Ω resistor to V_{CC} − 2.0 V.
6. V_{IHCMR} min varies 1:1 with V_{EE}, max varies 1:1 with V_{CC}.

Table 6. 100E SERIES PECL DC CHARACTERISTICS V_{CCx} = 5.0 V; V_{EE} = 0.0 V (Note 7)

Symbol	Characteristic	0°C			25°C			85°C			Unit
		Min	Typ	Max	Min	Typ	Max	Min	Typ	Max	
I_{EE}	Power Supply Current		154	185		154	185		177	212	mA
V_{OH}	Output HIGH Voltage (Note 8)	3975	4050	4120	3975	4050	4120	3975	4050	4120	mV
VOH_{sout}	Output HIGH Voltage sout/$\overline{sout}$	3975		4170	3975		4170	3975		4170	mV
V_{OL}	Output LOW Voltage (Note 8)	3190	3295	3380	3190	3255	3380	3190	3260	3380	mV
V_{IH}	Input HIGH Voltage (Single−Ended)	3835	3975	4120	3835	3975	4120	3835	3975	4120	mV
V_{IL}	Input LOW Voltage (Single−Ended)	3190	3355	3525	3190	3355	3525	3190	3355	3525	mV
V_{BB}	Output Voltage Reference	3.62		3.74	3.62		3.74	3.62		3.74	V
V_{IHCMR}	Input HIGH Voltage Common Mode Range (Differential Configuration Configuration) (Note 9)	2.2		4.6	2.2		4.6	2.2		4.6	V
I_{IH}	Input HIGH Current			150			150			150	μA
I_{IL}	Input LOW Current	0.5	0.3		0.5	0.25		0.5	0.2		μA

NOTE: Device will meet the specifications after thermal equilibrium has been established when mounted in a test socket or printed circuit board with maintained transverse airflow greater than 500 lfpm. Electrical parameters are guaranteed only over the declared operating temperature range. Functional operation of the device exceeding these conditions is not implied. Device specification limit values are applied individually under normal operating conditions and not valid simultaneously.

7. Input and output parameters vary 1:1 with V_{CC}. V_{EE} can vary −0.46 V / +0.8 V.
8. Outputs are terminated through a 50 Ω resistor to V_{CC} − 2.0 V.
9. V_{IHCMR} min varies 1:1 with V_{EE}, max varies 1:1 with V_{CC}.

Table 7. 100E SERIES NECL DC CHARACTERISTICS V_{CCx} = 0.0 V; V_{EE} = −5.0 V (Note 10)

Symbol	Characteristic	0°C5			25°C			85°C			Unit
		Min	Typ	Max	Min	Typ	Max	Min	Typ	Max	
I_{EE}	Power Supply Current		154	185		154	185		177	212	mA
V_{OH}	Output HIGH Voltage (Note 11)	−1025	−950	−880	−1025	−950	−880	−1025	−950	−880	mV
VOH_{sout}	Output HIGH Voltage sout/$\overline{sout}$	−1025		−830	−1025		−830	−1025		−830	mV
V_{OL}	Output LOW Voltage (Note 11)	−1810	−1705	−1620	−1810	−1745	−1620	−1810	−1740	−1620	mV
V_{IH}	Input HIGH Voltage (Single−Ended)	−1165	−1025	−880	−1165	−1025	−880	−1165	−1025	−880	mV
V_{IL}	Input LOW Voltage (Single−Ended)	−1810	−1645	−1475	−1810	−1645	−1475	−1810	−1645	−1475	mV
V_{BB}	Output Voltage Reference	−1.38		−1.26	−1.38		−1.26	−1.38		−1.26	V
V_{IHCMR}	Input HIGH Voltage Common Mode Range (Differential) Configuration (Note 12)	−2.8		−0.4	−2.8		−0.4	−2.8		−0.4	V
I_{IH}	Input HIGH Current			150			150			150	μA
I_{IL}	Input LOW Current	0.5	0.3		0.5	0.25		0.5	0.2		μA

NOTE: Device will meet the specifications after thermal equilibrium has been established when mounted in a test socket or printed circuit board with maintained transverse airflow greater than 500 lfpm. Electrical parameters are guaranteed only over the declared operating temperature range. Functional operation of the device exceeding these conditions is not implied. Device specification limit values are applied individually under normal operating conditions and not valid simultaneously.

10. Input and output parameters vary 1:1 with V_{CC}. V_{EE} can vary −0.46 V / +0.8 V.
11. Outputs are terminated through a 50 Ω resistor to V_{CC} − 2.0 V.
12. V_{IHCMR} min varies 1:1 with V_{EE}, max varies 1:1 with V_{CC}.

Table 8. AC CHARACTERISTICS V_{CCx} = 5.0 V; V_{EE} = 0.0 V or V_{CCx} = 0.0 V; V_{EE} = −5.0 V (Note 13)

Symbol	Characteristic	0°C			25°C			85°C			Unit
		Min	Typ	Max	Min	Typ	Max	Min	Typ	Max	
f_{MAX}	Maximum Conversion Frequency	2.0			2.0			2.0			Gb/s NRZ
t_{PLH} t_{PHL}	Propagation Delay to Output CLK to Q, Reset to Q CLK to SOUT (Diff) CLK to CL/4(Diff) CLK to CL/8(Diff)	 1500 800 1100 1100	 1800 975 1325 1325	 2100 1150 1550 1550	 1500 800 1100 1100	 1800 975 1325 1325	 2100 1150 1550 1550	 1500 800 1100 1100	 1800 975 1325 1325	 2100 1150 1550 1550	ps
t_s	Setup Time SINA, SINB SEL	 −100 0	 −250 −200		 −100 0	 −250 −200		 −100 0	 −250 −200		ps
t_h	Hold Time SINA, SINB, SEL	 450	 300		 450	 300		 450	 300		ps
t_{RR}	Reset Recovery Time	500	300		500	300		500	300		ps
t_{PW}	Minimum Pulse Width CLK, MR	 400			 400			 400			ps
t_{JITTER}	Random Clock Jitter (RMS)		< 1			< 1			< 1		ps
V_{PP}	Input Voltage Swing (Differential Configuration)	150		1000	150		1000	150		1000	mV
t_r t_f	Rise/Fall Times 20%−80% SOUT Other	 100 200	 225 425	 350 650	 100 200	 225 425	 350 650	 100 200	 225 425	 350 650	ps

NOTE: Device will meet the specifications after thermal equilibrium has been established when mounted in a test socket or printed circuit board with maintained transverse airflow greater than 500 lfpm. Electrical parameters are guaranteed only over the declared operating temperature range. Functional operation of the device exceeding these conditions is not implied. Device specification limit values are applied individually under normal operating conditions and not valid simultaneously.

13. 10 Series: V_{EE} can vary −0.46 V / +0.06 V.
    100 Series: V_{EE} can vary −0.46 V / +0.8 V.
14. Devices are designed to meet the AC specifications shown in the above table, after thermal equilibrium has been established. The circuit is in a test socket or mounted on a printed circuit board and transverse air flow greater than 500 lfpm is maintained.

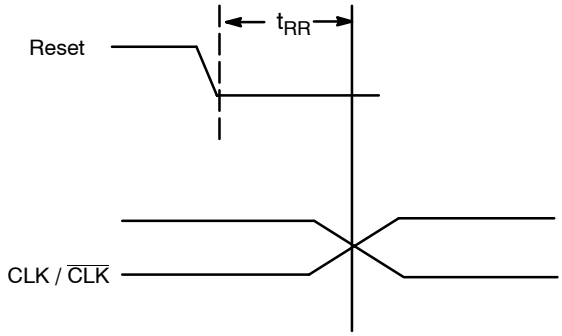

Figure 3.

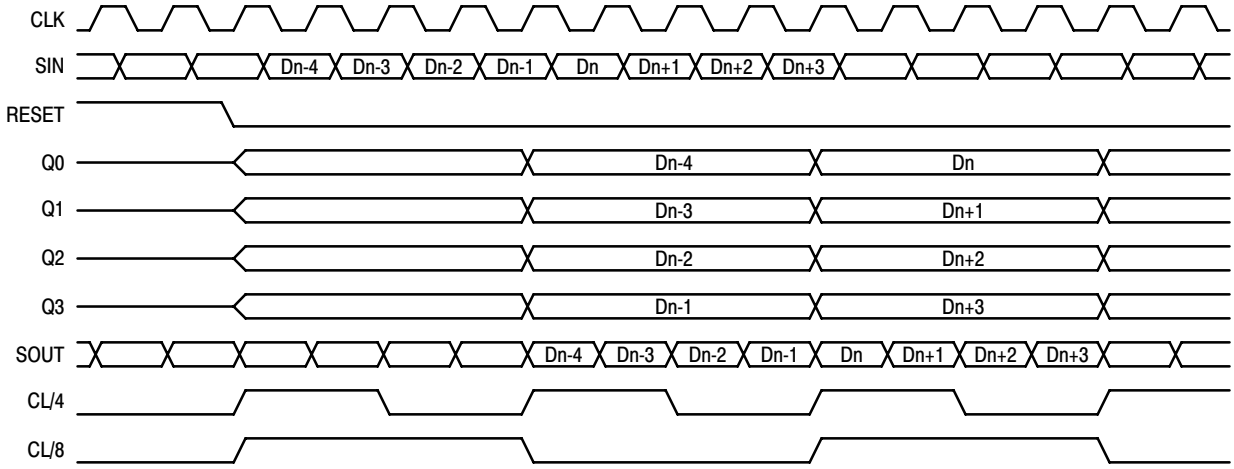

Timing Diagram A. 1:4 Serial to Parallel Conversion

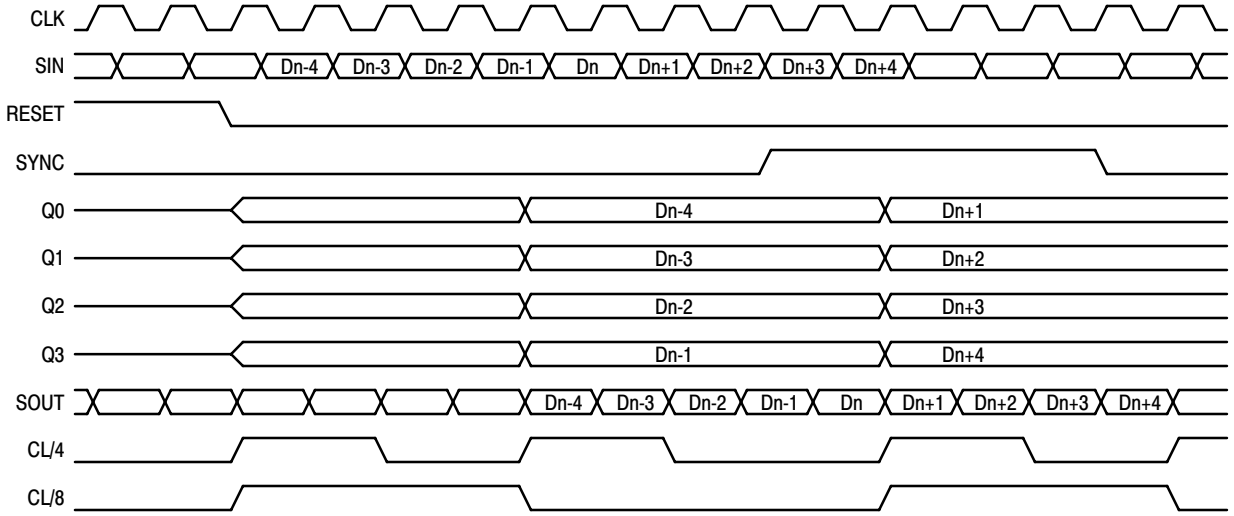

Timing Diagram B. 1:4 Serial to Parallel Conversion With SYNC Pulse

Figure 4. Timing Diagrams

APPLICATIONS INFORMATION

The MC10E/100E445 is an integrated 1:4 serial to parallel converter. The chip is designed to work with the E446 device to provide both transmission and receiving of a high speed serial data path. The E445, can convert up to a 2.0 Gb/s NRZ data stream into 4-bit parallel data. The device also provides a divide by four clock output to be used to synchronize the parallel data with the rest of the system.

The E445 features multiplexed dual serial inputs to provide test loop capability when used in conjunction with the E446. Figure 5 illustrates the loop test architecture. The architecture allows for the electrical testing of the link without requiring actual transmission over the serial data path medium. The SINA serial input of the E445 has an extra buffer delay and thus should be used as the loop back serial input.

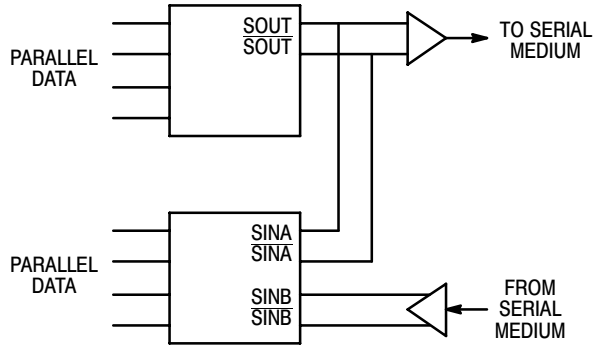

Figure 5. Loopback Test Architecture

The E445 features a differential serial output and a divide by 8 clock output to facilitate the cascading of two devices to build a 1:8 demultiplexer. Figure 6 illustrates the architecture for a 1:8 demultiplexer using two E445's; the timing diagram for this configuration can be found on the following page. Notice the serial outputs (SOUT) of the lower order converter feed the serial inputs of the the higher order device. This feed through of the serial inputs bounds the upper end of the frequency of operation. The clock to serial output propagation delay plus the setup time of the serial input pins must fit into a single clock period for the cascade architecture to function properly. Using the worst case values for these two parameters from the data sheet, TPD CLK to SOUT = 1150 ps and tS for SIN = −100 ps, yields a minimum period of 1050 ps or a clock frequency of 950 MHz.

The clock frequency is significantly lower than that of a single converter, to increase this frequency some games can be played with the clock input of the higher order E445. By delaying the clock feeding the second E445 relative to the clock of the first E445 the frequency of operation can be increased. The delay between the two clocks can be increased until the minimum delay of clock to serial out would potentially cause a serial bit to be swallowed (Figure 7).

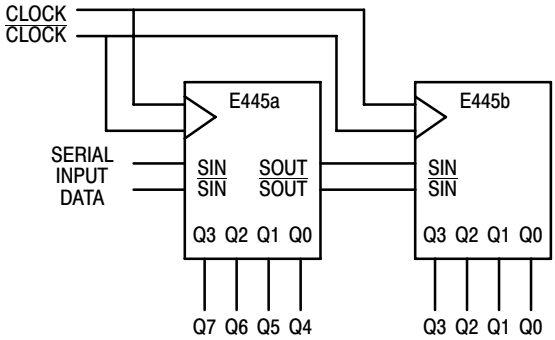

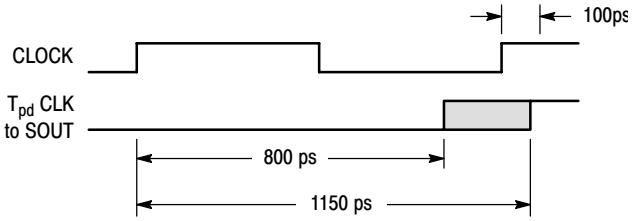

Figure 6. Cascaded 1:8 Converter Architecture

With a minimum delay of 800 ps on this output the clock for the lower order E445 cannot be delayed more than 800 ps relative to the clock of the first E445 without potentially missing a bit of information. Because the setup time on the serial input pin is negative coincident excursions on the data and clock inputs of the E445 will result in correct operation.

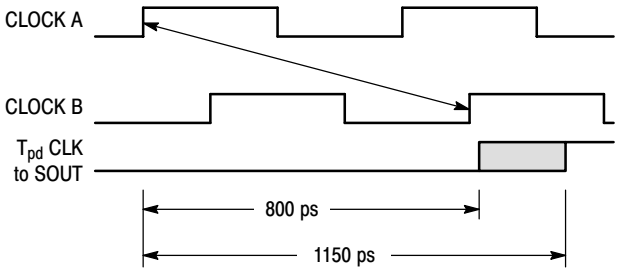

Figure 7. Cascade Frequency Limitation

Perhaps the easiest way to delay the second clock relative to the first is to take advantage of the differential clock inputs of the E445. By connecting the clock for the second E445 to the complementary clock input pin the device will clock a half a clock period after the first E445 (Figure 8). Utilizing this simple technique will raise the potential conversion frequency up to 1.4 GHz. The divide by eight clock of the second E445 should be used to synchronize the parallel data to the rest of the system as the parallel data of the two E445's will no longer be synchronized. This skew problem between the outputs can be worked around as the parallel information will be static for eight more clock pulses.

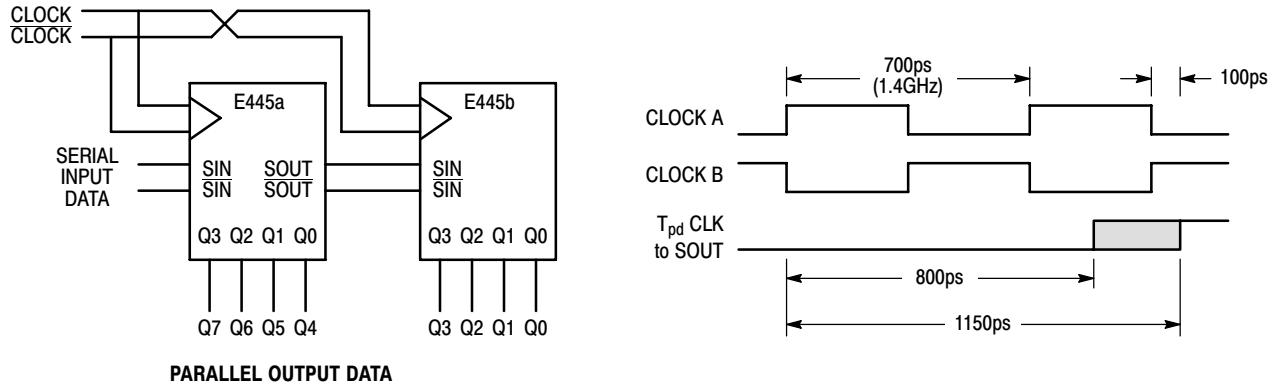

Figure 8. Extended Frequency 1:8 Demultiplexer

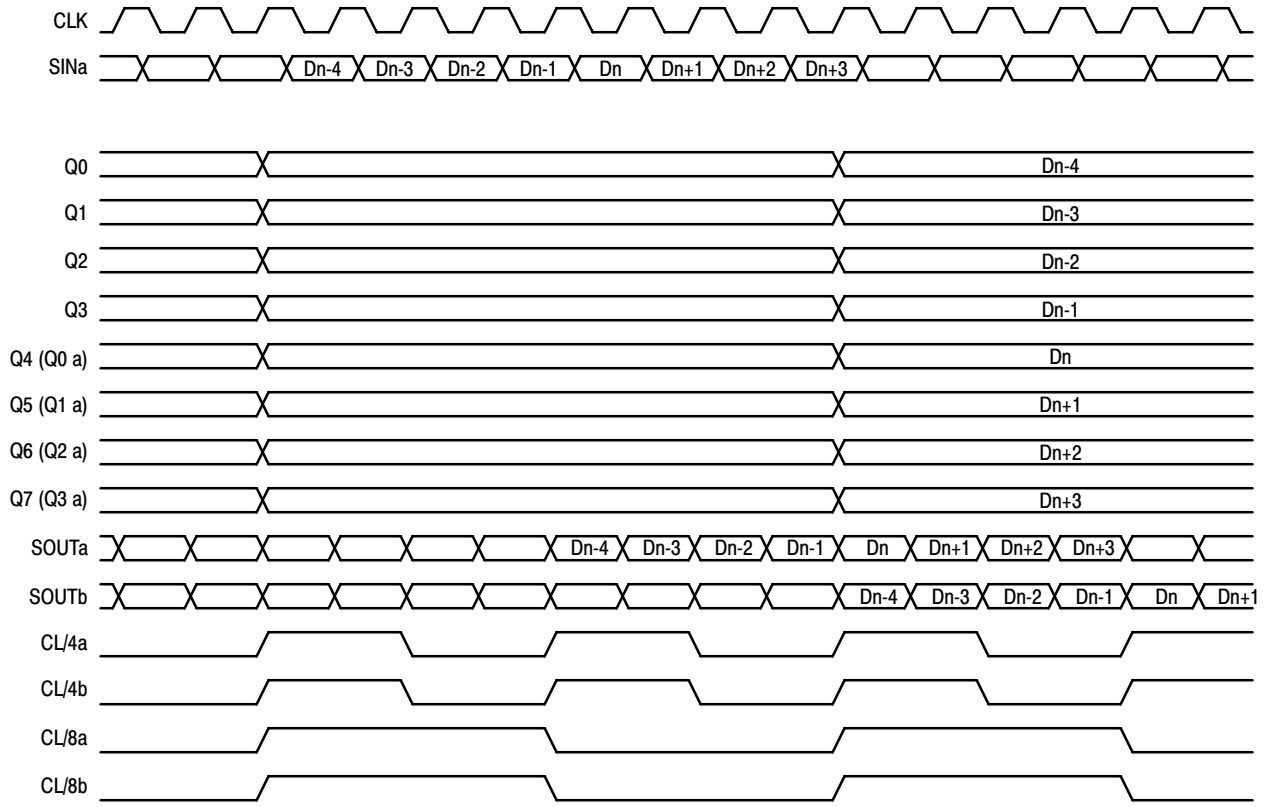

Figure 9. Timing Diagram A. 1:8 Serial to Parallel Conversion

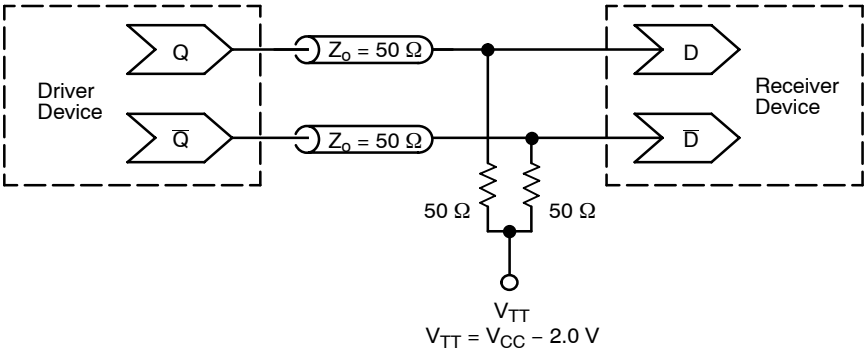

Figure 10. Typical Termination for Output Driver and Device Evaluation (See Application Note AND8020/D − Termination of ECL Logic Devices.)

ORDERING INFORMATION

Device	Package	Shipping†
MC10E445FN	PLCC−28	37 Units / Rail
MC10E445FNG	PLCC−28 (Pb−Free)	37 Units / Rail
MC10E445FNR2	PLCC−28	500 / Tape & Reel
MC10E445FNR2G	PLCC−28 (Pb−Free)	500 / Tape & Reel
MC100E445FN	PLCC−28	37 Units / Rail
MC100E445FNG	PLCC−28 (Pb−Free)	37 Units / Rail
MC100E445FNR2	PLCC−28	500 / Tape & Reel
MC100E445FNR2G	PLCC−28 (Pb−Free)	500 / Tape & Reel

†For information on tape and reel specifications, including part orientation and tape sizes, please refer to our Tape and Reel Packaging Specifications Brochure, BRD8011/D.

Resource Reference of Application Notes

AN1405/D – ECL Clock Distribution Techniques

AN1406/D – Designing with PECL (ECL at +5.0 V)

AN1503/D – ECLinPS™ I/O SPiCE Modeling Kit

AN1504/D – Metastability and the ECLinPS Family

AN1568/D – Interfacing Between LVDS and ECL

AN1672/D – The ECL Translator Guide

AND8001/D – Odd Number Counters Design

AND8002/D – Marking and Date Codes

AND8020/D – Termination of ECL Logic Devices

AND8066/D – Interfacing with ECLinPS

AND8090/D – AC Characteristics of ECL Devices

PACKAGE DIMENSIONS

PLCC−28
FN SUFFIX
PLASTIC PLCC PACKAGE
CASE 776−02
ISSUE E

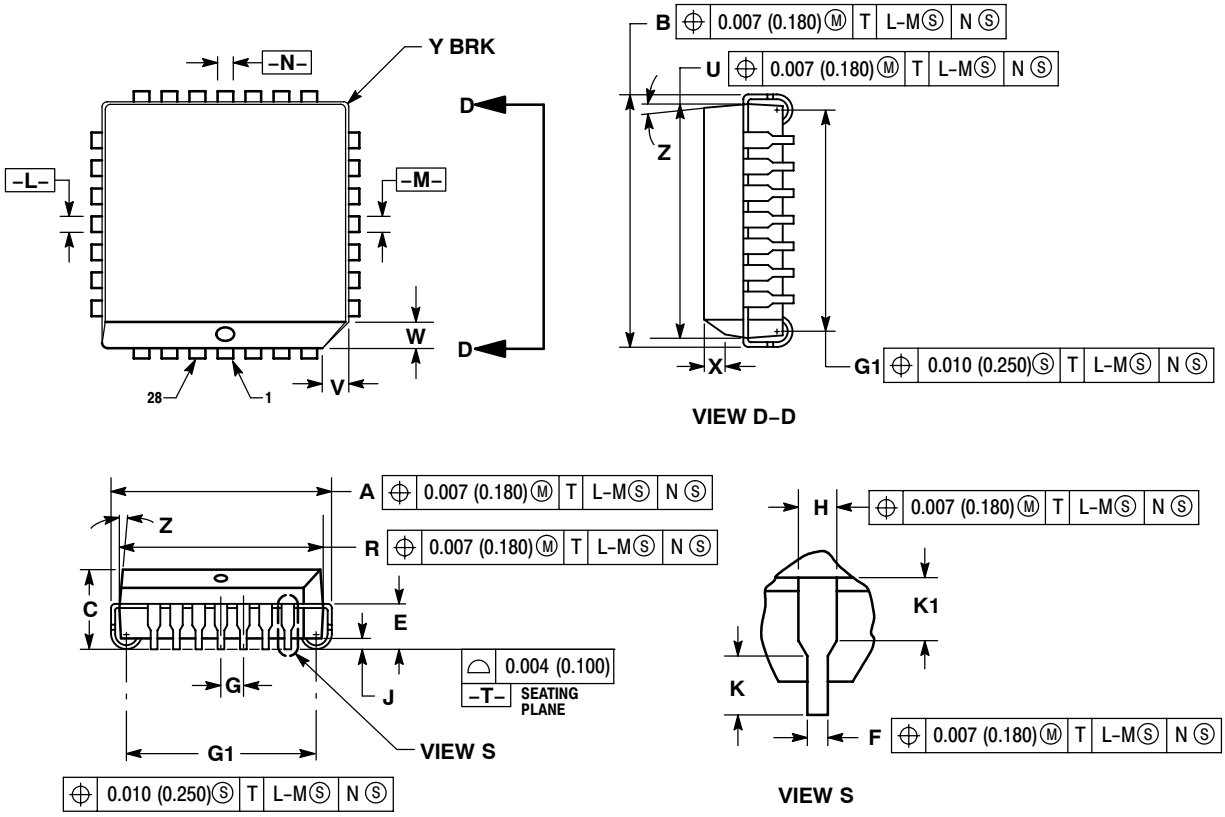

NOTES:
1. DATUMS −L−, −M−, AND −N− DETERMINED WHERE TOP OF LEAD SHOULDER EXITS PLASTIC BODY AT MOLD PARTING LINE.
2. DIMENSION G1, TRUE POSITION TO BE MEASURED AT DATUM −T−, SEATING PLANE.
3. DIMENSIONS R AND U DO NOT INCLUDE MOLD FLASH. ALLOWABLE MOLD FLASH IS 0.010 (0.250) PER SIDE.
4. DIMENSIONING AND TOLERANCING PER ANSI Y14.5M, 1982.
5. CONTROLLING DIMENSION: INCH.
6. THE PACKAGE TOP MAY BE SMALLER THAN THE PACKAGE BOTTOM BY UP TO 0.012 (0.300). DIMENSIONS R AND U ARE DETERMINED AT THE OUTERMOST EXTREMES OF THE PLASTIC BODY EXCLUSIVE OF MOLD FLASH, TIE BAR BURRS, GATE BURRS AND INTERLEAD FLASH, BUT INCLUDING ANY MISMATCH BETWEEN THE TOP AND BOTTOM OF THE PLASTIC BODY.
7. DIMENSION H DOES NOT INCLUDE DAMBAR PROTRUSION OR INTRUSION. THE DAMBAR PROTRUSION(S) SHALL NOT CAUSE THE H DIMENSION TO BE GREATER THAN 0.037 (0.940). THE DAMBAR INTRUSION(S) SHALL NOT CAUSE THE H DIMENSION TO BE SMALLER THAN 0.025 (0.635).

	INCHES		MILLIMETERS	
DIM	MIN	MAX	MIN	MAX
A	0.485	0.495	12.32	12.57
B	0.485	0.495	12.32	12.57
C	0.165	0.180	4.20	4.57
E	0.090	0.110	2.29	2.79
F	0.013	0.019	0.33	0.48
G	0.050 BSC		1.27 BSC	
H	0.026	0.032	0.66	0.81
J	0.020	---	0.51	---
K	0.025	---	0.64	---
R	0.450	0.456	11.43	11.58
U	0.450	0.456	11.43	11.58
V	0.042	0.048	1.07	1.21
W	0.042	0.048	1.07	1.21
X	0.042	0.056	1.07	1.42
Y	---	0.020	---	0.50
Z	2°	10°	2°	10°
G1	0.410	0.430	10.42	10.92
K1	0.040	---	1.02	---

ECLinPS is a trademark of Semiconductor Components Industries, LLC (SCILLC).

ON Semiconductor and are registered trademarks of Semiconductor Components Industries, LLC (SCILLC). SCILLC reserves the right to make changes without further notice to any products herein. SCILLC makes no warranty, representation or guarantee regarding the suitability of its products for any particular purpose, nor does SCILLC assume any liability arising out of the application or use of any product or circuit, and specifically disclaims any and all liability, including without limitation special, consequential or incidental damages. “Typical” parameters which may be provided in SCILLC data sheets and/or specifications can and do vary in different applications and actual performance may vary over time. All operating parameters, including “Typicals” must be validated for each customer application by customer’s technical experts. SCILLC does not convey any license under its patent rights nor the rights of others. SCILLC products are not designed, intended, or authorized for use as components in systems intended for surgical implant into the body, or other applications intended to support or sustain life, or for any other application in which the failure of the SCILLC product could create a situation where personal injury or death may occur. Should Buyer purchase or use SCILLC products for any such unintended or unauthorized application, Buyer shall indemnify and hold SCILLC and its officers, employees, subsidiaries, affiliates, and distributors harmless against all claims, costs, damages, and expenses, and reasonable attorney fees arising out of, directly or indirectly, any claim of personal injury or death associated with such unintended or unauthorized use, even if such claim alleges that SCILLC was negligent regarding the design or manufacture of the part. SCILLC is an Equal Opportunity/Affirmative Action Employer. This literature is subject to all applicable copyright laws and is not for resale in any manner.

PUBLICATION ORDERING INFORMATION

LITERATURE FULFILLMENT:
Literature Distribution Center for ON Semiconductor
P.O. Box 5163, Denver, Colorado 80217 USA
Phone: 303−675−2175 or 800−344−3860 Toll Free USA/Canada
Fax: 303−675−2176 or 800−344−3867 Toll Free USA/Canada
Email: orderlit@onsemi.com

N. American Technical Support: 800−282−9855 Toll Free USA/Canada
Europe, Middle East and Africa Technical Support:
Phone: 421 33 790 2910
Japan Customer Focus Center
Phone: 81−3−5773−3850

ON Semiconductor Website: **www.onsemi.com**

Order Literature: http://www.onsemi.com/orderlit

For additional information, please contact your local Sales Representative

ООО «ЛайфЭлектроникс» “LifeElectronics” LLC

ИНН 7805602321 КПП 780501001 Р/С 40702810122510004610 ФАКБ "АБСОЛЮТ БАНК" (ЗАО) в г.Санкт-Петербурге К/С 30101810900000000703 БИК 044030703

Компания «Life Electronics» занимается поставками электронных компонентов импортного и отечественного производства от производителей и со складов крупных дистрибьюторов Европы, Америки и Азии.

С конца 2013 года компания активно расширяет линейку поставок компонентов по направлению коаксиальный кабель, кварцевые генераторы и конденсаторы (керамические, пленочные, электролитические), за счёт заключения дистрибьюторских договоров

Мы предлагаем:

- *Конкурентоспособные цены и скидки постоянным клиентам.*
- *Специальные условия для постоянных клиентов.*
- *Подбор аналогов.*
- *Поставку компонентов в любых объемах, удовлетворяющих вашим потребностям.*

- *Приемлемые сроки поставки, возможна ускоренная поставка.*
- *Доставку товара в любую точку России и стран СНГ.*
- *Комплексную поставку.*
- *Работу по проектам и поставку образцов.*
- *Формирование склада под заказчика.*

- *Сертификаты соответствия на поставляемую продукцию (по желанию клиента).*
- *Тестирование поставляемой продукции.*
- *Поставку компонентов, требующих военную и космическую приемку.*
- *Входной контроль качества.*
- *Наличие сертификата ISO.*

В составе нашей компании организован Конструкторский отдел, призванный помогать разработчикам, и инженерам.

Конструкторский отдел помогает осуществить:

- *Регистрацию проекта у производителя компонентов.*
- *Техническую поддержку проекта.*
- *Защиту от снятия компонента с производства.*
- *Оценку стоимости проекта по компонентам.*
- *Изготовление тестовой платы монтаж и пусконаладочные работы.*

Тел: +7 (812) 336 43 04 (многоканальный)
Email: org@lifeelectronics.ru

www.lifeelectronics.ru