Micropower High Efficiency 5V/12V Step-Up DC/DC Converter for Flash Memory

FEATURES

- **12V at 120mA from 5V or 3.3V Supply**
- Supply Voltage as Low as 1.8V
- Better High Current Efficiency Than CMOS
- Up to 89% Efficiency
- **120μA Quiescent Current**
- Shutdown to 10μA
- Programmable 5V or 12V Output
- Low V_{CESAT} Switch: 170mV at 1A Typical
- I_{LIM} Pin Programs Peak Switch Current
- Uses Inexpensive Surface Mount Inductors
- 8-Lead DIP or SOIC Package

APPLICATIONS

- Flash Memory V_{PP} Generator
- Palmtop Computers
- Portable Instruments
- Bar-Code Scanners
- Personal Digital Assistants
- PCMCIA Cards

DESCRIPTION

The LT1301 is a micropower step-up DC/DC converter that utilizes Burst Mode™ operation. The device can deliver 5V or 12V from a two-cell battery input. It features programmable 5V or 12V output via a logic-controlled input, no-load quiescent current of 120μA and a shutdown pin which reduces supply current to 10μA. The on-chip power switch has a low 170mV saturation voltage at a switch current of 1A, a four-fold reduction over prior designs. A 155kHz internal oscillator allows the use of extremely small surface mount inductors and capacitors. Operation is guaranteed at 1.8V input. This allows more energy to be extracted from the battery, increasing operating life. The I_{LIM} pin can be used for soft start or to program peak switch current with a single resistor allowing the use of even smaller inductors in lighter load applications. The LT1301 is available in an 8-lead SOIC package, minimizing board space requirements. For a selectable 3.3V/5V step-up converter, please see the LT1300. For higher output power, see the LT1302.

Burst Mode is a trademark of Linear Technology Corporation.

TYPICAL APPLICATIONS

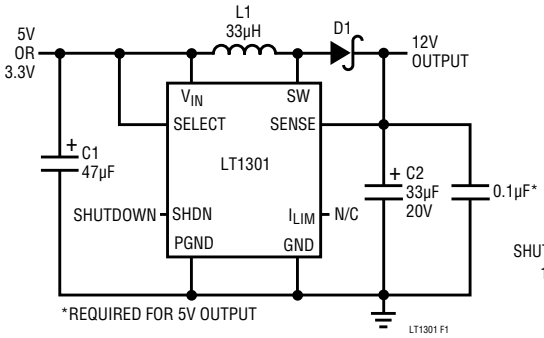

L1 = COILCRAFT DO3316-333
OR SUMIDA CD73-330KC
D1 = 1N5817 OR MOTOROLA
MBRS130LT3
C1 = AVX TPSD476M016R0100
OR SANYO OS-CON 165A47M
C2 = AVX TPSD336M020R0100
OR SANYO OS-CON 205A33M

Output Voltage

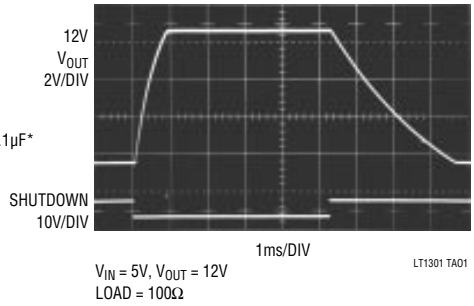

V_{IN} = 5V, V_{OUT} = 12V
LOAD = 100Ω

Efficiency

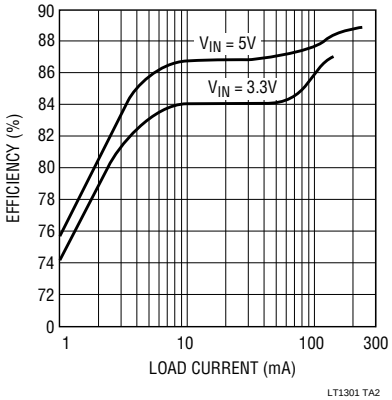

Figure 1. 3.3V/5V to 12V Step-Up Converter

LT1300 F2

ABSOLUTE MAXIMUM RATINGS

V_{IN} Voltage 10V
SW1 Voltage 20V
Sense Voltage 20V
Shutdown Voltage 10V
Select Voltage 10V
I_{LIM} Voltage 0.5V
Maximum Power Dissipation 500mW
Operating Temperature Range
LT1301C ..... 0°C to 70°C
LT1301I ..... 40°C to 85°C
Storage Temperature Range ..... –65°C to 150°C
Lead Temperature (Soldering, 10 sec) ..... 300°C

PACKAGE/ORDER INFORMATION

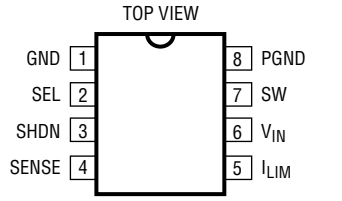

N8 PACKAGE 8-LEAD PLASTIC DIP
S8 PACKAGE 8-LEAD PLASTIC SOIC

T_{JMAX} = 100°C, θ_{JA} = 150°C/W

ORDER PART NUMBER
LT1301CN8 LT1301CS8 LT1301IS8
S8 PART MARKING
1301 1301I

ELECTRICAL CHARACTERISTICS

T_A = 25°C, V_{IN} = 2V unless otherwise noted.

SYMBOL	PARAMETER	CONDITIONS		MIN	TYP	MAX	UNITS
I_Q	Quiescent Current	V_{SHDN} = 0.5V, V_{SEL} = 5V, V_{SENSE} = 5.5V V_{SHDN} = 1.8V	● ●		120 7	200 15	µA µA
V_{IN}	Input Voltage Range		 ●	1.8 2.0			V V
V_{OUT}	Output Sense Voltage	V_{SEL} = 5V V_{SEL} = 0V	● ●	11.52 4.75	12.00 5.00	12.48 5.25	V V
	Output Referred Comparator Hysteresis	V_{SEL} = 5V (Note 1) V_{SEL} = 0V (Note 1)	● ●		50 22	100 50	mV mV
	Oscillator Frequency	Current Limit not Asserted.		120	155	185	kHz
	Oscillator TC				0.2		%/°C
DC	Maximum Duty Cycle			75	86	95	%
t_{ON}	Switch On-Time	Current Limit not Asserted.			5.6		µs
	Output Line Regulation	1.8V < V_{IN} < 6V	●		0.06	0.15	%/V
V_{CESAT}	Switch Saturation Voltage	I_{SW} = 700mA	●		130	200	mV
	Switch Leakage Current	V_{SW} = 5V, Switch Off	●		0.1	10	µA
	Peak Switch Current (Internal Trip Point)	I_{LIM} Floating (See Typical Application) I_{LIM} Grounded		0.75	1.0 0.4	1.25	A A
V_{SHDNH}	Shutdown Pin High		●	1.8			V
V_{SHDNL}	Shutdown Pin Low					0.5	V
V_{SELH}	Select Pin High		●	1.5			V
V_{SELL}	Select Pin Low		●			0.8	V
I_{SHDN}	Shutdown Pin Bias Current	V_{SHDN} = 5V V_{SHDN} = 2V V_{SHDN} = 0V	● ● ●		8 3 0.1	20 1	µA µA µA
I_{SEL}	Select Pin Bias Current	0V < V_{SEL} < 5V	●		1	3	µA

The ● denotes specifications which apply over the 0°C to 70°C temperature range.

Note 1: Hysteresis specified is DC. Output ripple may be higher if output capacitance is insufficient or capacitor ESR is excessive. See operation section.

TYPICAL PERFORMANCE CHARACTERISTICS

5V Output Efficiency

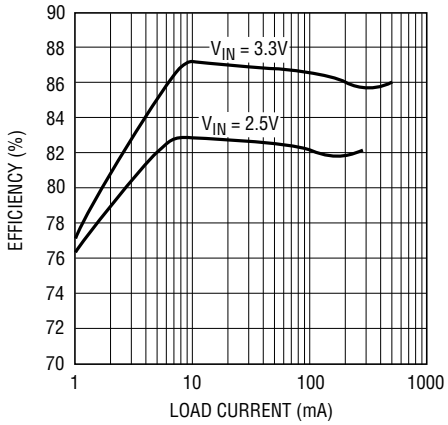

Total Quiescent Current in Shutdown

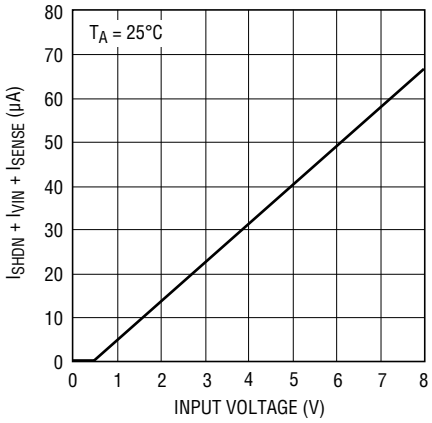

Shutdown Pin Bias Current

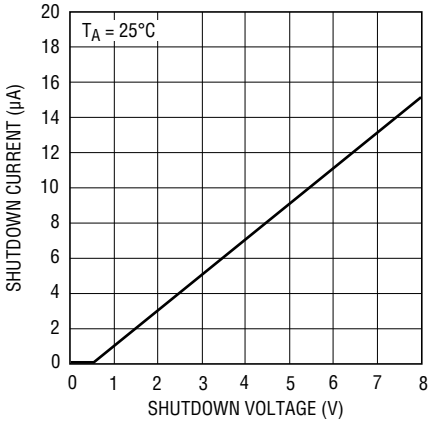

Saturation Voltage vs Switch Current

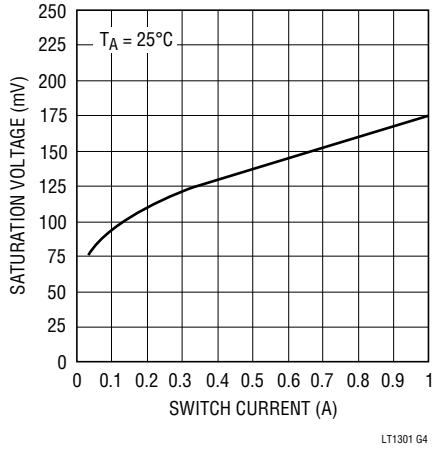

No-Load Input Current

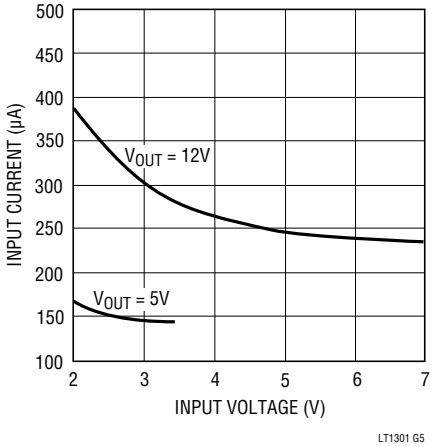

Load Transient Response of Figure 1 Circuit

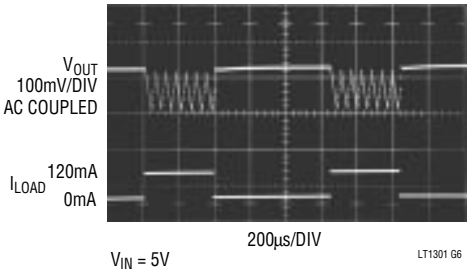

V_{IN} = 5V

Load Transient Response of Figure 1 Circuit

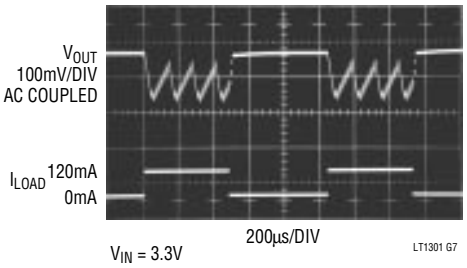

V_{IN} = 3.3V

Select Pin Transient Response

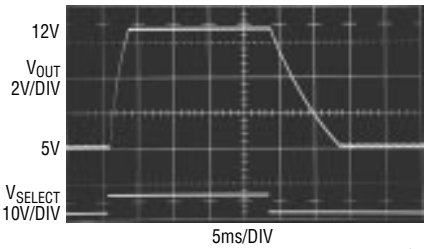

C_{OUT} = 100µF, V_{IN} = 5V
100Ω LOAD

Select Pin Transient Response

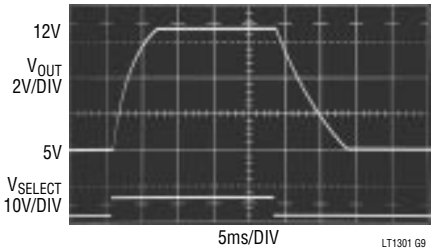

C_{OUT} = 100µF, V_{IN} = 3.3V
100Ω LOAD

PIN FUNCTIONS

GND (Pin 1): Signal Ground. Tie to PGND under the package.

Sel (Pin 2): Output Select. When tied to V_{IN} converter regulates at 12V. When grounded or floating converter regulates at 5V. May be driven under logic control.

SHDN (Pin 3): Shutdown. Pull high to shut down the LT1301. Ground for normal operation.

Sense (Pin 4): "Output" Pin. Goes to internal resistive divider. If operating at 5V output, a 0.1µF ceramic capacitor is required from Sense to Ground.

I_{LIM} (Pin 5): Float for 1A switch current limit. Tie to ground for approximately 400mA. A resistor between I_{LIM} and ground sets peak current to some intermediate value .

V_{IN} (Pin 6): Supply Pin. Must be bypassed with a large value electrolytic to ground. Keep bypass within 0.2" of the device.

SW (Pin 7): Switch Pin. Connect inductor and diode here. Keep layout short and direct to minimize radio frequency interference.

PGND (Pin 8): Power Ground. Tie to signal ground (pin 1) under the package. Bypass capacitor from V_{IN} should be tied directly to PGND within 0.2" of the device.

BLOCK DIAGRAM

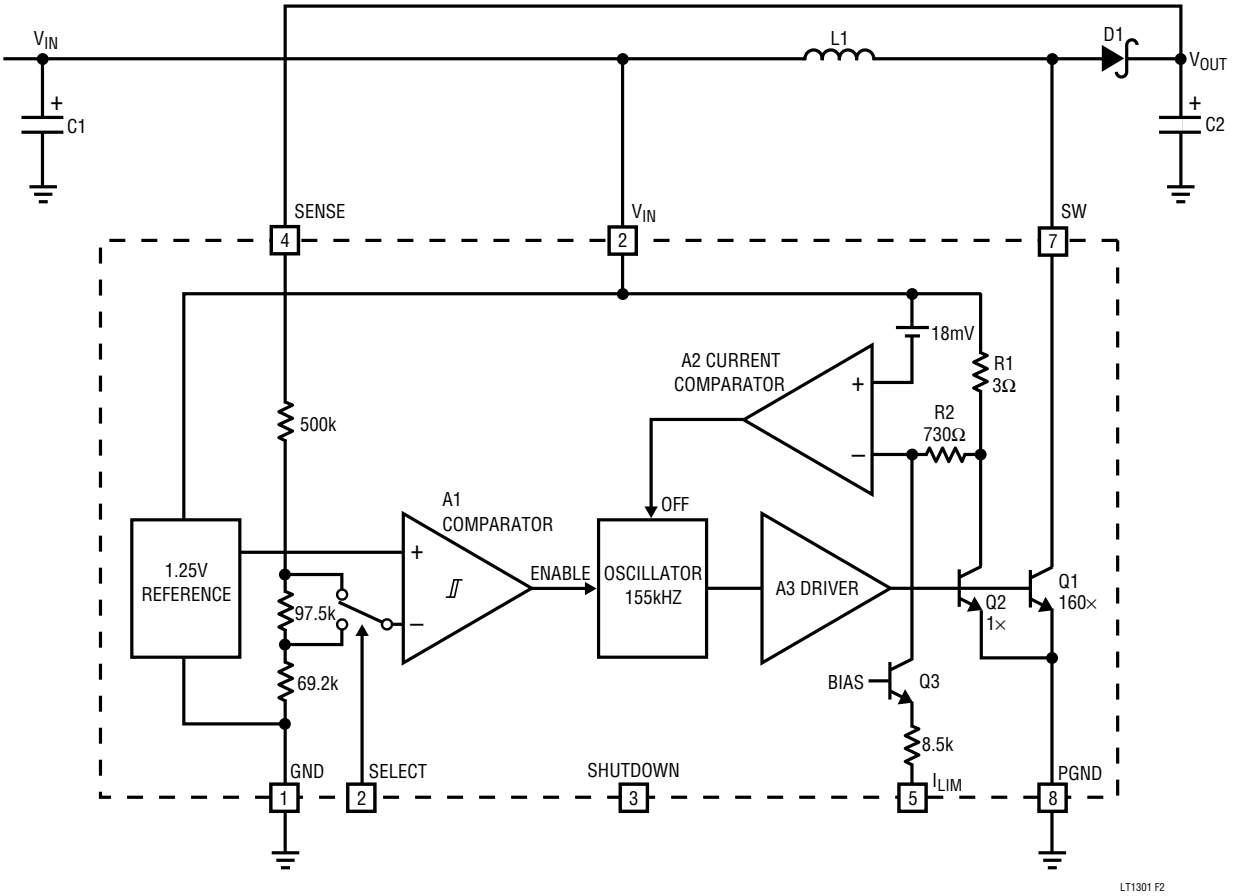

Figure 2.

TEST CIRCUIT

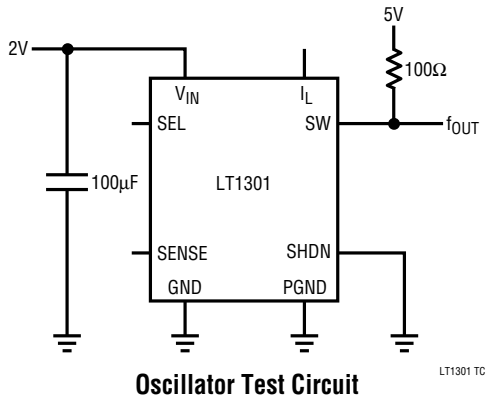

Oscillator Test Circuit

OPERATION

Operation of the LT1301 is best understood by referring to the Block Diagram in Figure 2. When A1's negative input, related to the Sense pin voltage by the appropriate resistor-divider ratio is higher that the 1.25V reference voltage, A1's output is low. A2, A3 and the oscillator are turned off, drawing no current. Only the reference and A1 consume current, typically 120µA. When A1's negative input drops below 1.25V, overcoming A1's 6mV hysteresis, A1's output goes high enabling the oscillator, current comparator A2, and driver A3. Quiescent current increases to 2mA as the device prepares for high current switching. Q1 then turns on in controlled saturation for (nominally) 5.3µs or until comparator A2 trips, whichever comes first. After a fixed off-time of (nominally) 1.2µs, Q1 turns on again. The LT1301's switching causes current to alternately build up in L1 and dump into output capacitor C2 via D1, increasing the output voltage. When the output is high enough to cause A1's output to go to low, switching action ceases. C2 is left to supply current to the load until V_{OUT} decreases enough to force A1's output high, and the entire cycle repeats. Figure 4 details relevant waveforms. A1's cycling causes low-to-mid-frequency ripple voltage on the output. Ripple can be reduced by making the output capacitor large. The 33µF unit specified results in ripple of 100mV to 200mV on the 12V output. A 100µF capacitor will decrease ripple to 50mV. If operating at 5V ouput a 0.1µF ceramic capacitor is required at the Sense pin in addition to the electrolytic.

If switch current reaches 1A, causing A2 to trip, switch on-time is reduced and off-time increases slightly. This allows continuous mode operation during bursts. A2 monitors the voltage across 3Ω resistor R1 which is directly related to the switch current. Q2's collector current is set by the emitter-area ratio to 0.6% of Q1's collector current. When R1's voltage drop exceeds 18mV, corresponding to 1A switch current, A2's output goes high, truncating the on-time portion of the oscillator cycle and increasing off-time to about 2µs as shown in Figure 3, trace A. This programmed peak current can be reduced by tying the I_{LIM} pin to ground, causing 15µA to flow through R2 into Q3's collector. Q3's current causes a 10.4mV drop in R2 so that only an additional 7.6mV is required across R1 to turn off the switch. This corresponds to a 400mA switch current as shown in Figure 3, trace B. The reduced peak switch current reduces I^2R loses in Q1, L1, C1 and D1. Efficiency can be increased by doing this provided that the accompanying reduction in full load current is acceptable. Lower peak currents also extend alkaline battery life due to the alkaline cell's high internal impedance.

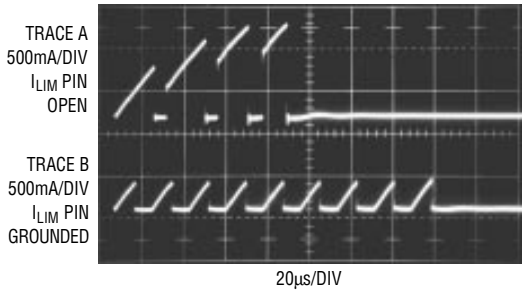

Figure 3. Switch Pin Current With I_{LIM} Floating or Grounded

APPLICATIONS INFORMATION

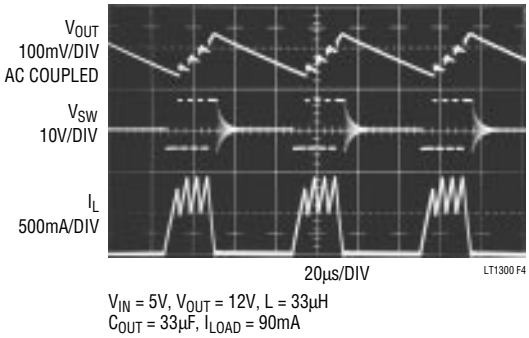

Figure 4. Burst Mode Operation in Action

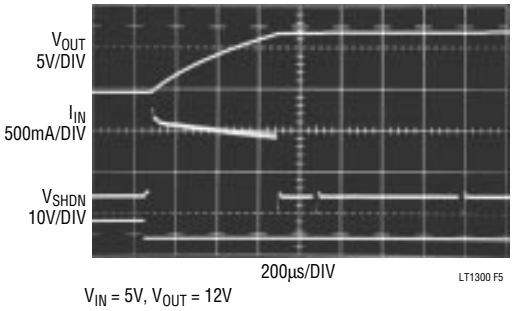

Figure 5. Start-Up Response

Output Voltage Selection

The LT1301 can be selected to 5V or 12V under logic control or fixed at either by tying Select to ground or V_{IN} respectively. It is permissible to tie Select to a voltage higher than V_{IN} as long as it does not exceed 10V. Efficiency in 5V mode will be slightly less that in 12V mode due to the fact that the diode drop is a greater percentage of 5V than 12V. Since the bipolar switch in the LT1301 gets its base drive from V_{IN}, no reduction in switch efficiency occurs when in 5V mode. When V_{IN} exceeds the programmed output voltage the output will follow the input. This is characteristic of the simple step-up or "boost" converter topology. A circuit example that provides a regulated output with an input voltage above or below the output (known as a buck-boost or SEPIC) is shown in the Typical Applications section.

Shutdown

The converter can be turned off by pulling SHDN (pin 3) high. Quiescent current drops to 10µA in this condition. Bias current of 8µA to 10µA flows into the pin (at 5V input). It is recommended that SHDN not be left floating. Tie the pin to ground if the feature is not used. SHDN can be driven high even if V_{IN} is floating.

I_{LIM} Function

The LT1301's current limit (I_{LIM}) pin can be used for soft start. Upon start-up, the LT1301 will draw maximum current from the supply (about 1A) from the supply to charge the output capacitor. Figure 5 shows V_{OUT} and I_{IN} waveforms as the device is turned on. The high current flow can create IR drops along supply and ground lines or cause the input supply to drop out momentarily. By

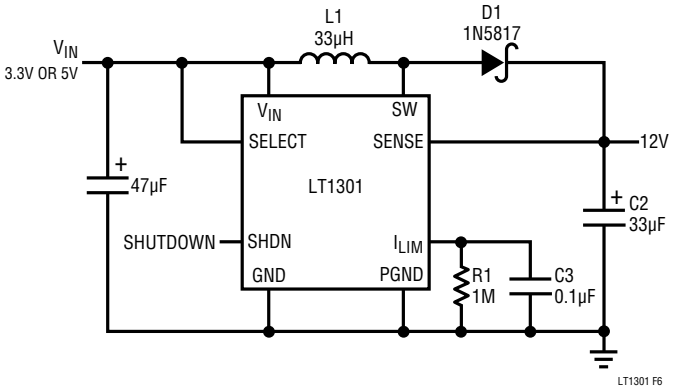

Figure 6.

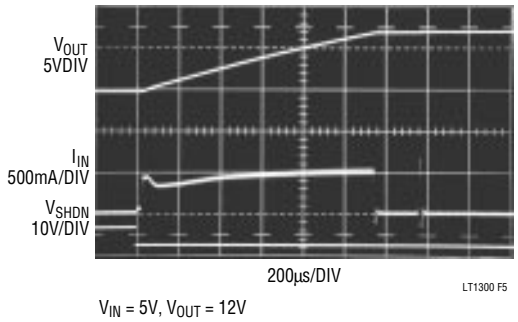

Figure 7. Startup Response Soft-Start Circuitry Added

adding R1 and C3 as shown in Figure 6, the switch current in the LT1301 is initially limited to 400mA until the 15µA flowing out of the I_{LIM} pin charges up C3. Input current is held to under 500mA while the output voltage ramps up to 12V as shown in Figure 7. R1 provides a discharge path for the capacitor without appreciably decreasing peak switch current. When using the I_{LIM} pin soft-start mode a minimum load of a few hundred microamperes is recommended to prevent C3 from discharging, as no current flows out of I_{LIM} when the LT1301 is not

APPLICATIONS INFORMATION

Table 1. Recommended Inductors

PART NUMBER	VENDOR	L (μH)	DCR (Ω)	V_{IN}(V)	I_{LIM} PIN	EFFICIENCY (%) 30mA	60mA	120mA	COMPONENT HEIGHT (mm)	PHONE NUMBER
DO3316-333	Coilcraft	33	0.088	3.3	Open	84	84	85	5.5	(708) 639–6400
				5	Open	89	89	90		
DO1608-223	Coilcraft	22	.31	3.3	Open	82	82	—	3.5	
				3.3	Ground	85	—	—		
				5	10k	86	87	—		
				5	Ground	88	—	—		
DO1608-103	Coilcraft	10	.11	2	Open	78	—	—	3.5	
CTX20-1	Coiltronics	20	.175	3.3	Open	84	84	—	4.2	(407) 241-7876
				5	Open	88	88	89		
GA10-332	Gowanda	33	.077	3.3	Open	86	86	87	Through-Hole	(716) 532-2234
				5	Open	89	89	90		
LQH3G220K04M00	Murata-Erie	22	0.7	3.3	Ground	81	—	—	2.0	(404) 436-1300
				5	Ground	85	—	—		
CD73-330KC	Sumida	33	0.131	3.3	Open	84	85	86	3.5	(708) 956-0666
				5	Open	88	88	89		
CDRH62-330MC	Sumida	33	0.48	3.3	Open	80	80	81	3.0	
					Ground	85	—	—		
				5	Open	84	84	85		
					Ground	83	—	—		

switching. Zero load current causes the LT1301 to switch so infrequently that C3 can completely discharge reducing subsequent peak switch current to 400mA. If a load is suddenly applied, output voltage will sag until C3 can be recharged and peak switch current returns to 1A.

If the full capacity of the LT1301 is not required peak current can be reduced by changing the value of R3 as shown in Figure 8. With R3 = 0 switch current is limited to approximately 400mA. Smaller, less expensive inductors with lower saturation ratings can then be used.

Inductor Selection

For full output power, the inductor should have a saturation current rating of 1.25A for worst-case current limit, although it is acceptable to bias an inductor 20% or more into saturation. Smaller inductors can be used in conjunction with the I_{LIM} pin. Efficiency is significantly affected by inductor DCR. For best efficiency limit the DCR to 0.03Ω or less. Toroidal types are preferred in some cases due to their inherent flux containment and EMI/RFI superiority. Recommended inductors are listed in Table 1.

Table 2. Recommended Capacitors

VENDOR	SERIES	TYPE	PHONE#
AVX	TPS	Surface Mount	(803)448–9411
Sanyo	OS-CON	Through-Hole	(619) 661–6835
Panasonic	HFQ	Through-Hole	(201) 348-5200

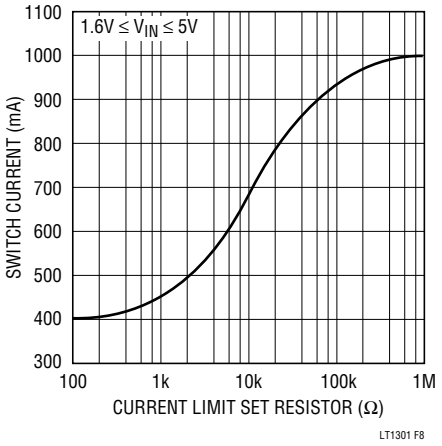

Figure 8. Peak Switch Current vs. Current Limit Set Resistor

APPLICATIONS INFORMATION

Capacitor Selection

Low ESR capacitors are required for both input and output of the LT1301. ESR directly affects ripple voltage and efficiency. For surface mount applications AVX TPS series tantalum capacitors are recommended. These have been specially designed for SMPS and have low ESR along with high surge current ratings. For through-hole applications Sanyo OS-CON capacitors offer extremely low ESR in a small size. Again, if peak switch current is reduced using the I_{LIM} pin, capacitor requirements can be relaxed and smaller, higher ESR units can be used. Suggested capacitor sources are listed in Table 2.

Diode Selection

Best performance is obtained with a Schottky rectifier diode such as the 1N5817. Phillips Components makes this in surface mount as the PRLL5817. Motorola makes the MBRS130LT3 which is slightly better and also in surface mount. For lower output power a 1N4148 can be used although efficiency will suffer substantially.

Layout Considerations

The LT1301 is a high speed, high current device. The input capacitor must be no more than 0.2″ from V_{IN} (pin 6) and ground. Connect the PGND and GND (pins 8 and 1) together under the package. Place the inductor adjacent to SW (pin 7) and make the switch pin trace as short as possible. This keeps radiated noise to a minimum.

TYPICAL APPLICATIONS

Four-Cell to 5V Converter

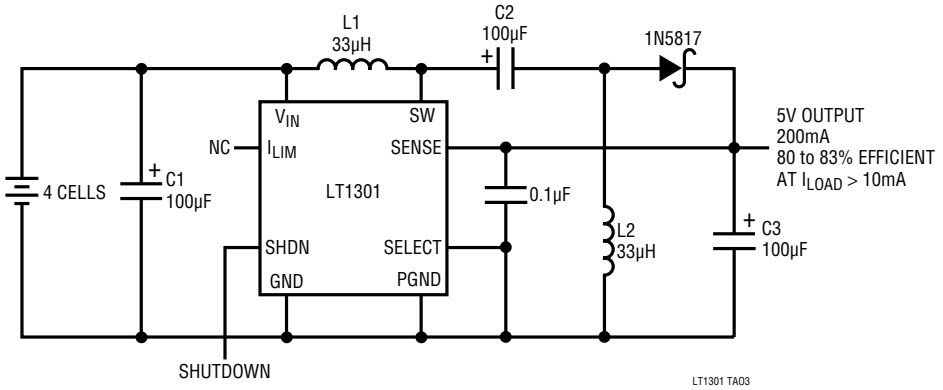

Step-Up Converter with Automatic Output Disconnect

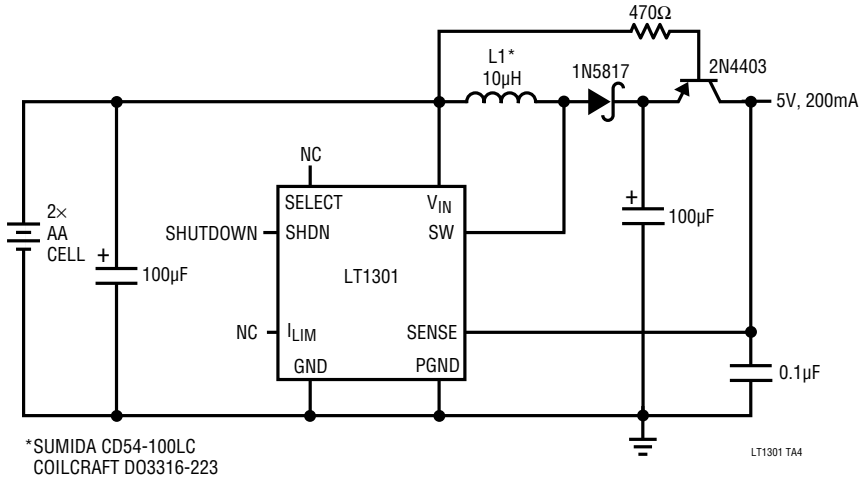

TYPICAL APPLICATIONS

LCD Contrast Supply

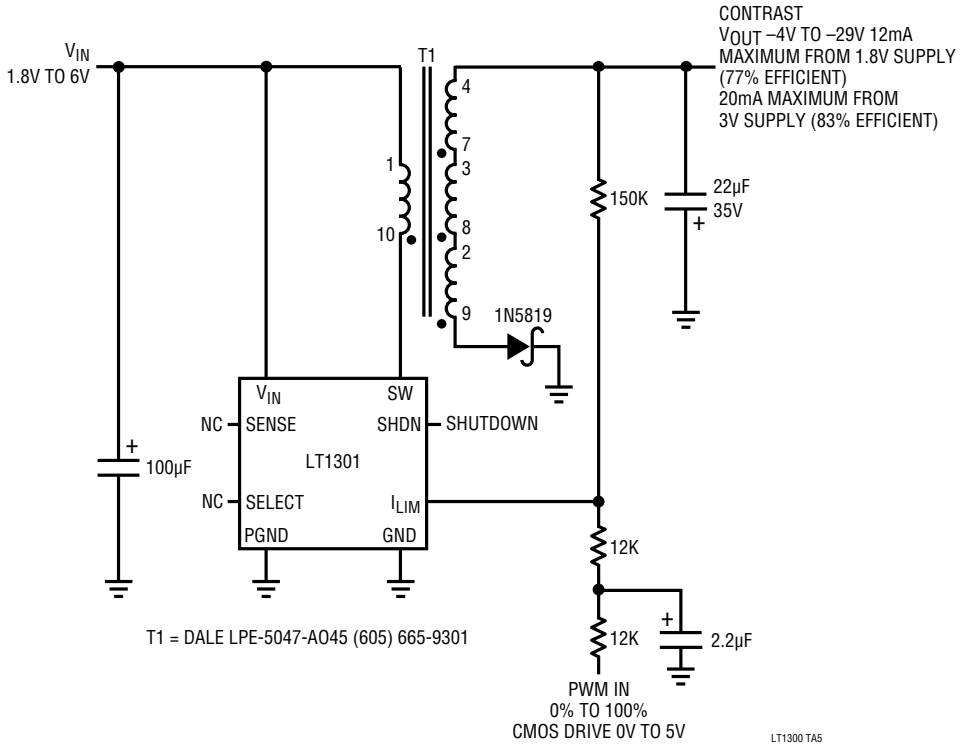

Low-Voltage CCFL Power Supply

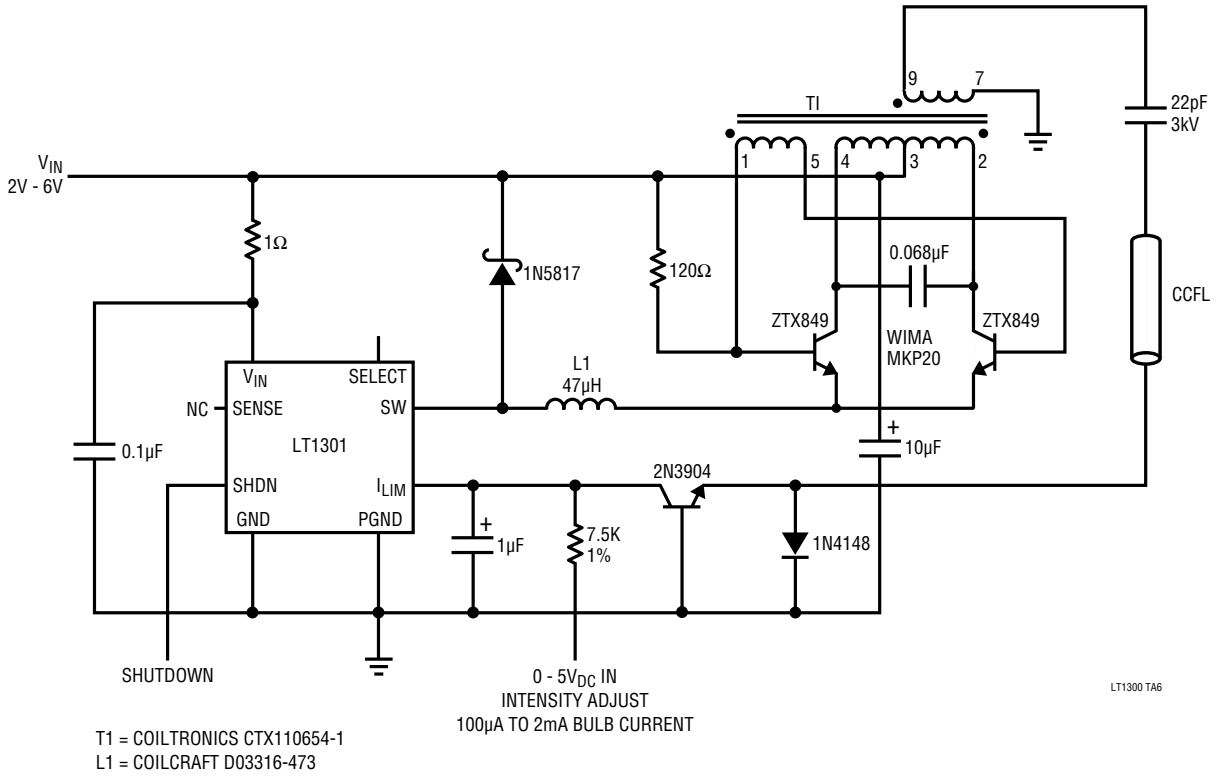

TYPICAL APPLICATIONS

5V to –5V Converter

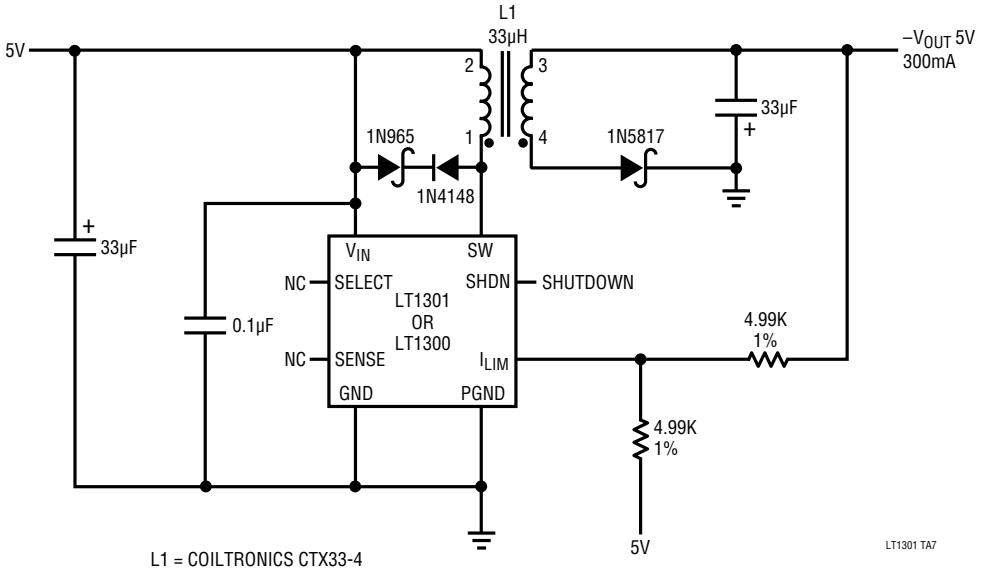

PACKAGE DESCRIPTION

Dimensions in inches (millimeters) unless otherwise noted.

N8 Package
8-Lead Plastic DIP

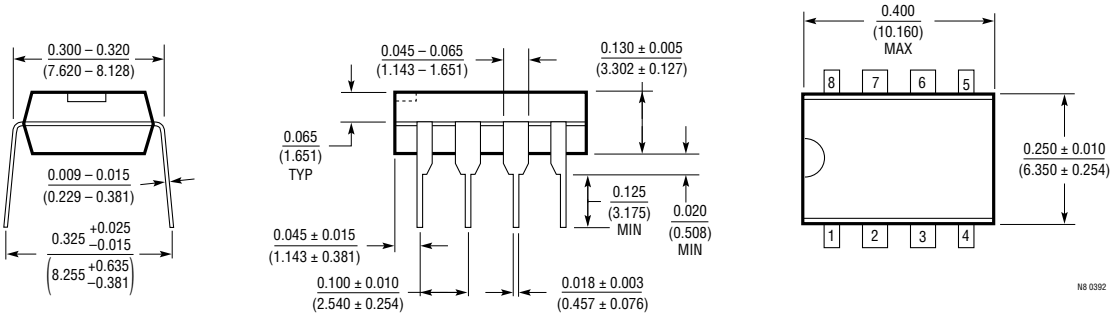

S8 Package
8-Lead Plastic SOIC

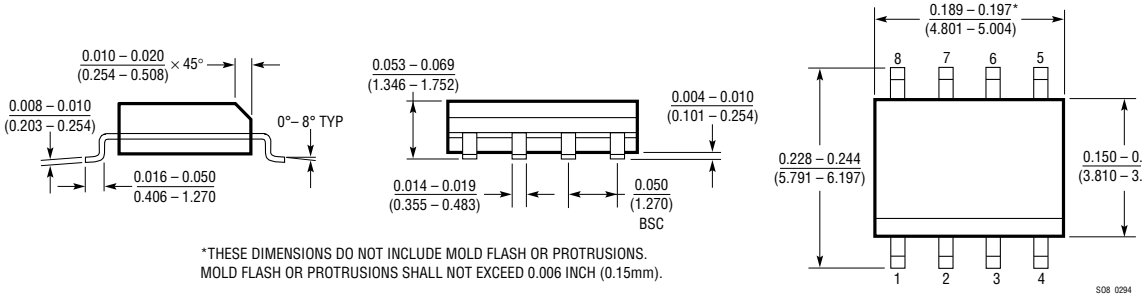

*THESE DIMENSIONS DO NOT INCLUDE MOLD FLASH OR PROTRUSIONS.
MOLD FLASH OR PROTRUSIONS SHALL NOT EXCEED 0.006 INCH (0.15mm).

Information furnished by Linear Technology Corporation is believed to be accurate and reliable. However, no responsibility is assumed for its use. Linear Technology Corporation makes no representation that the interconnection of its circuits as described herein will not infringe on existing patent rights.

U.S. Area Sales Offices

NORTHEAST REGION
Linear Technology Corporation
One Oxford Valley
2300 E. Lincoln Hwy.,Suite 306
Langhorne, PA 19047
Phone: (215) 757-8578
FAX: (215) 757-5631

Linear Technology Corporation
266 Lowell St., Suite B-8
Wilmington, MA 01887
Phone: (508) 658-3881
FAX: (508) 658-2701

SOUTHEAST REGION
Linear Technology Corporation
17060 Dallas Parkway
Suite 208
Dallas, TX 75248
Phone: (214) 733-3071
FAX: (214) 380-5138

CENTRAL REGION
Linear Technology Corporation
Chesapeake Square
229 Mitchell Court, Suite A-25
Addison, IL 60101
Phone: (708) 620-6910
FAX: (708) 620-6977

SOUTHWEST REGION
Linear Technology Corporation
22141 Ventura Blvd.
Suite 206
Woodland Hills, CA 91364
Phone: (818) 703-0835
FAX: (818) 703-0517

NORTHWEST REGION
Linear Technology Corporation
782 Sycamore Dr.
Milpitas, CA 95035
Phone: (408) 428-2050
FAX: (408) 432-6331

International Sales Offices

FRANCE
Linear Technology S.A.R.L.
Immeuble "Le Quartz"
58 Chemin de la Justice
92290 Chatenay Malabry
France
Phone: 33-1-41079555
FAX: 33-1-46314613

GERMANY
Linear Techonolgy GmbH
Untere Hauptstr. 9
D-85386 Eching
Germany
Phone: 49-89-3197410
FAX: 49-89-3194821

JAPAN
Linear Technology KK
5F YZ Bldg.
4-4-12 Iidabashi, Chiyoda-Ku
Tokyo, 102 Japan
Phone: 81-3-3237-7891
FAX: 81-3-3237-8010

KOREA
Linear Technology Korea Branch
Namsong Building, #505
Itaewon-Dong 260-199
Yongsan-Ku, Seoul
Korea
Phone: 82-2-792-1617
FAX: 82-2-792-1619

SINGAPORE
Linear Technology Pte. Ltd.
101 Boon Keng Road
#02-15 Kallang Ind. Estates
Singapore 1233
Phone: 65-293-5322
FAX: 65-292-0398

TAIWAN
Linear Technology Corporation
Rm. 801, No. 46, Sec. 2
Chung Shan N. Rd.
Taipei, Taiwan, R.O.C.
Phone: 886-2-521-7575
FAX: 886-2-562-2285

UNITED KINGDOM
Linear Technology (UK) Ltd.
The Coliseum, Riverside Way
Camberley, Surrey GU15 3YL
United Kingdom
Phone: 44-276-677676
FAX: 44-276-64851

World Headquarters

Linear Technology Corporation
1630 McCarthy Blvd.
Milpitas, CA 95035-7487
Phone: (408) 432-1900
FAX: (408) 434-0507

08/16/93

LT/GP 0394 10K • PRINTED IN USA

© LINEAR TECHNOLOGY CORPORATION 1994

ООО «ЛайфЭлектроникс» “LifeElectronics” LLC

ИНН 7805602321 КПП 780501001 Р/С 40702810122510004610 ФАКБ "АБСОЛЮТ БАНК" (ЗАО) в г.Санкт-Петербурге К/С 30101810900000000703 БИК 044030703

Компания «Life Electronics» занимается поставками электронных компонентов импортного и отечественного производства от производителей и со складов крупных дистрибьюторов Европы, Америки и Азии.

С конца 2013 года компания активно расширяет линейку поставок компонентов по направлению коаксиальный кабель, кварцевые генераторы и конденсаторы (керамические, пленочные, электролитические), за счёт заключения дистрибьюторских договоров

Мы предлагаем:

- *Конкурентоспособные цены и скидки постоянным клиентам.*
- *Специальные условия для постоянных клиентов.*
- *Подбор аналогов.*
- *Поставку компонентов в любых объемах, удовлетворяющих вашим потребностям.*

- *Приемлемые сроки поставки, возможна ускоренная поставка.*
- *Доставку товара в любую точку России и стран СНГ.*
- *Комплексную поставку.*
- *Работу по проектам и поставку образцов.*
- *Формирование склада под заказчика.*

- *Сертификаты соответствия на поставляемую продукцию (по желанию клиента).*
- *Тестирование поставляемой продукции.*
- *Поставку компонентов, требующих военную и космическую приемку.*
- *Входной контроль качества.*
- *Наличие сертификата ISO.*

В составе нашей компании организован Конструкторский отдел, призванный помогать разработчикам, и инженерам.

Конструкторский отдел помогает осуществить:

- *Регистрацию проекта у производителя компонентов.*
- *Техническую поддержку проекта.*
- *Защиту от снятия компонента с производства.*
- *Оценку стоимости проекта по компонентам.*
- *Изготовление тестовой платы монтаж и пусконаладочные работы.*

Тел: +7 (812) 336 43 04 (многоканальный)
Email: org@lifeelectronics.ru

www.lifeelectronics.ru