# T540/T541 High Reliability Series (HRA) Polymer Electrolytic, 2.5 – 63 VDC

Electronic Components KEMET CHARGED.

KO-CAP Polymer Capacitors

## Overview

The KEMET Organic Capacitor (KO-CAP) is a solid electrolytic capacitor with a conductive polymer cathode capable of delivering very low ESR and improved capacitance retention at high frequencies. KO-CAP combines the low ESR of multilayer ceramic, the high capacitance of aluminum electrolytic, and the volumetric efficiency of tantalum into a single surface mount package. Unlike liquid electrolyte-based capacitors, KO-CAP has a very long operational life and high ripple current capabilities.

The HRA Polymer Electrolytic offers the same performance advantages as other KO-CAP series with screening options associated with high reliability (Hi-Rel) applications. These HRA grade components offer several surge current screening options. The recommended application derating for these capacitors is 10 – 20%, rendering them suitable for application voltages from 2.5 to 63 VDC.

These are the first polymer electrolytic capacitors available with failure rate options as defined by KEMET's KO-CAP Reliability Assessment method. This method utilizes accelerated conditions (voltage and temperature) applied to board-mounted samples to assess long term device reliability. The failure rates available are B (0.1% per 1,000 hours), C (0.01% per 1,000 hours), and D (0.001% per 1,000 hours). The KO-CAP Reliability Assessment method was developed as a result of over 10 years of research and is described in numerous papers available on www.kemet.com.

## Benefits

- Approved for DLA Drawing 04051/04052
- B, C, and D failure rates available
- 100% accelerated steady state aging
- High frequency capacitance retention
- Improved humidity capability 85°C/85% RH, 1.0 $V_R$ (in black color epoxy) available
- Very low ESR values down to 5 mΩ
- Surge current testing options
- Volumetrically efficient
- EIA standard case sizes
- KEMET's KO-CAP Reliability Assessment method

© KEMET Electronics Corporation • KEMET Tower • One East Broward Boulevard
Fort Lauderdale, FL 33301 USA • 954-766-2800 • www.kemet.com

## Applications

Typical applications include decoupling , filtering and hold-up in defense and aerospace applications that require low ESR or a benign failure mode.
When extreme temperatures and humidity are taken into account, polymer capacitors offer a number of advantages over other types of capacitors. KEMET continues to investigate the behavior of polymer capacitors in extreme conditions. If you have questions about using these capacitors in a specific environment or application, we suggest you contact your local KEMET representative or Field Application Engineer. You may also refer to “Considerations for Polymer Capacitors in Extreme Environments” located at www.kemet.com/ExtremePolymerPaper.

## Environmental Compliance

RoHS Compliant (6/6) according to Directive 2002/95/EC when ordered with 100% Sn solder. Halogen Free.

## K-SIM

For a detailed analysis of specific part numbers, please visit ksim.kemet.com to access KEMET's K-SIM software. KEMET K-SIM is designed to simulate behavior of components with respect to frequency, ambient temperature, and DC bias levels.

## Ordering Information

| T | 541 | D | 157 | M | 10 | A | H | 65 | 10 | |
|---|---|---|---|---|---|---|---|---|---|---|
| Capacitor Class | Series | Case Size | Capacitance Code (pF) | Capacitance Tolerance | Rated Voltage (VDC) | Failure Rate/ Design | Termination Finish | Surge Option | ESR | Packaging (C-Spec) |
| T = Tantalum | 540 = Polymer COTS<br>541 = Polymer COTS Multiple Anode | A, B, C, D, O, X, Y | First two digits represent significant figures. Third digit specifies number of zeros. | K = ± 10%<br>M = ±20% | 2R5 = 2.5<br>003 = 3<br>004 = 4<br>006 = 6.3<br>010 = 10<br>016 = 16<br>020= 20<br>025 = 25<br>035 = 35<br>050 = 50<br>063 = 63 | A = N/A<br>B* = 0.1%/KHrs<br>C* = 0.01%/KHrs<br>D*= 0.001%/KHrs | H = Standard solder coated (SnPb 5% Pb minimum)<br>T = 100% Matte Tin (Sn)-plated | 65 = 4 cycles at 25°C ±5°C**<br>66 = 10 cycles at 25°C ±5°C***<br>67 = 10 cycles at -55°C +0°C/-5°C and +85°C ±5°C***<br>85 = 4 cycles at 25°C ±5°C ** and improved humidity capability<br>86 = 10 cycles at 25°C ±5°C*** and improved humidity capability<br>87= 10 cycles at −55°C +0°C/−5°C and +85°C ±5°C*** and improved humidity capability | 05 = ESR - High<br>10 = ESR - Standard<br>20 = ESR - Low<br>30* = ESR - Ultra Low ESR | Blank = 7" Reel<br>7280 = 13" Reel<br>7610 = Bulk Bag<br>7640 = Bulk plastic box<br>WAFL = Waffle Pack |

** Select part numbers,*
*** Before voltage aging,*
**** After voltage aging*

## Ordering Information – DLA Drawing

| 04052- | 002 | A |
|---|---|---|
| Drawing Number | Dash Number | Surge Current Option |
| 04052<br>04051 | See Part Number List | Blank = 4 cycles +25°C ±5°C Before Voltage Aging<br>A = 10 cycles +25°C ±5°C After Voltage Aging<br>B = 10 cycles −55°C +0°C/−5°C and +85°C ±5°C After Voltage Aging |

## Performance Characteristics

| Item | Performance Characteristics |
|---|---|
| Operating Temperature | −55°C to 125°C * |
| Rated Capacitance Range | 4.7 – 1,500 µF at 120 Hz/25°C |
| Capacitance Tolerance | K Tolerance (10%), M Tolerance (20%) |
| Rated Voltage Range | 2.5 – 63 V |
| DF (120 Hz) | ≤ 10% |
| ESR (100 kHz) | Refer to Part Number Electrical Specification Table |
| Leakage Current | ≤ 0.1 CV (µA) at rated voltage after 5 minutes |

** KEMET's Polymer COTS (T540/T541 Series) capacitors are rated for operation between −55°C and +125°C. Parametric electrical performance remains within stated specification limits after 1,000 hours of continuous operation and/or storage at +125°C. Long-term duty cycles or storage at or above +125°C may result in an increase in ESR performance outside of the stated specification limits.*

## Qualification

| Test | Condition | Characteristics | | | |
|---|---|---|---|---|---|
| Endurance | 105°C at rated voltage, 2,000 hours<br>125°C at 2/3 rated voltage, 2,000 hours | Δ C/C | Within −20/+10% of initial value | | |
| | | DF | ≤ initial limit | | |
| | | DCL ** | 1.25 x IL at 125°C | | |
| | | ESR | 2 x IL (105°C); 5 x IL (125°C) | | |
| Storage Life | 125°C at 0 volts, 2,000 hours | Δ C/C | Within −20/+10% of initial value | | |
| | | DF | Within initial limits | | |
| | | DCL ** | Within 2.0 x initial limit | | |
| | | ESR | Within 5.0 x initial limit | | |
| Humidity | 60°C, 90% RH, 500 hours, rated voltage<br>60°C, 90% RH, 500 hours, no load<br>85°C, 85% RH, 1,000 hours, rated voltage *** | Δ C/C | Within −5%/+35% of initial value | | |
| | | DF | ≤ initial limit<br>Within 1.5 x IL *** | | |
| | | DCL | Within 3.0 x initial limit | | |
| Temperature Stability | Extreme temperature exposure at a succession of continuous steps at +25°C, −55°C, +25°C, +85°C, +125°C, +25°C | | +25°C | −55°C | +85°C (1) | +125°C (2) |
| | | Δ C/C | ±5% | ±10% | ±20% | ±30% |
| | | DF | IL | IL | 1.2 x IL | 1.5 x IL |
| | | DCL | IL | N/A | 10 x IL | 10 x IL |
| Surge Voltage | 105°C, 1.32 x rated voltage, 33 Ω resistance, 1,000 cycles | Δ C/C | Within −20/+5% of initial value | | |
| | | DF | Within initial limits | | |
| | | DCL | Within initial limits | | |
| | | ESR | Within initial limits | | |
| Mechanical Shock/ Vibration | Mil-Std-202, Method 213, Condition I, 100 G peak<br>Mil-Std-202, Method 204, Condition D, 10 Hz to 2,000 Hz, 20 G peak | Δ C/C | Within ±10% of initial value | | |
| | | DF | Within initial limits | | |
| | | DCL | Within initial limits | | |
| Additional qualifcation testing per MIL-PRF-55365/8 | Please contact KEMET for more information | | | | |

**IL = Initial limit*
*** The test voltage shall be maintained during the cool down from elevated test temperature to +25°C. After cool down, the capacitors shall be discharged for a minimum of 5 minutes. DC leakage measurements are allowed at this time.*
*(1) ≥16V - ΔC/C = ±30%*
*(2) ≥16V - ΔC/C = ±40%*
**** For Part Number with surge options 85, 86, and 87*

## Certification

DLA Drawing 04051 & 04052

## Electrical Characteristics

### ESR vs. Frequency

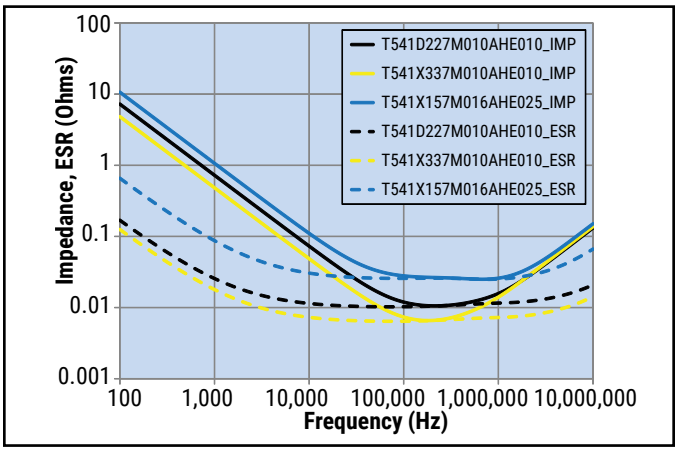


### Capacitance vs. Frequency

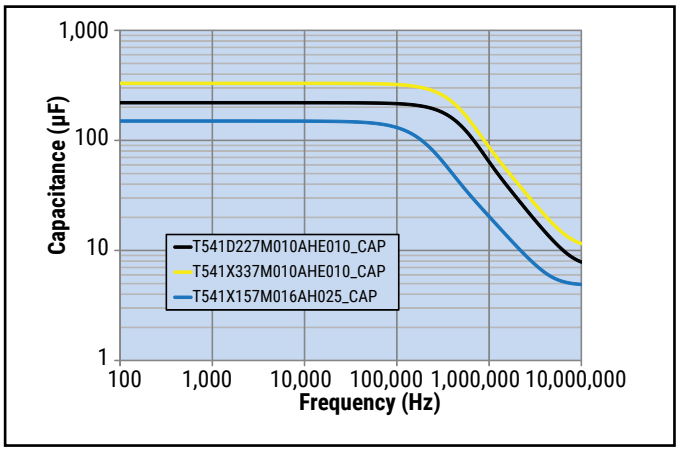


## Dimensions – Millimeters (Inches)

Metric will govern

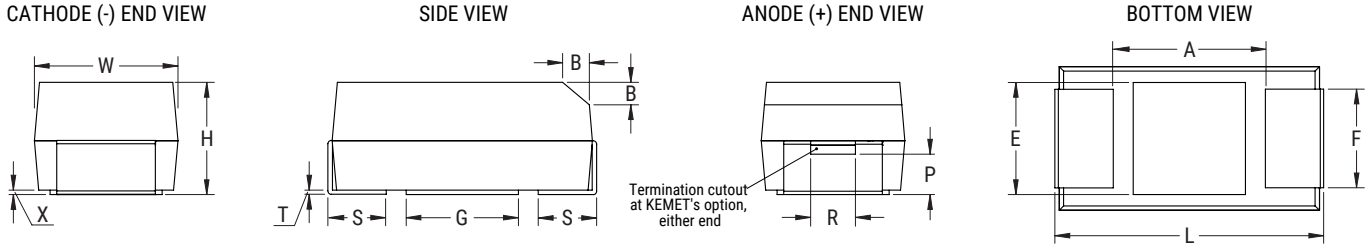


| Case Size | | Component Dimensions | | | | | | | | | | | | | Typical Weight |
|---|---|---|---|---|---|---|---|---|---|---|---|---|---|---|---|
| KEMET | EIA | L | W | H | F±0.1 ±(0.004) | S±0.3 ±(0.012) | B±0.15 (Ref)±0.006 | X (Ref) | P (Ref) | R (Ref) | T (Ref) | A (Minimum) | G (Ref) | E (Ref) | (mg) |
| A | 3216-18 | 3.2 ±0.2 (0.126 ±0.008) | 1.6 ±0.2 (0.063 ±0.008) | 1.6 ±0.2 (0.063 ±0.008) | 1.2 (0.047) | 0.8 (0.031) | 0.4 (0.016) | 0.10 ±0.10 (0.004 ±0.004) | 0.4 (0.016) | 0.4 (0.016) | 0.13 (0.005) | 1.2 (0.047) | 1.1 (0.043) | 1.3 (0.051) | 53.17 |
| B | 3528-21 | 3.5 ±0.2 (0.138 ±0.008) | 2.8 ±0.2 (0.110 ±0.008) | 1.9 ±0.2 (0.075 ±0.008) | 2.2 (0.087) | 0.8 (0.031) | 0.4 (0.016) | 0.10 ±0.10 (0.004 ±0.004) | 0.5 (0.020) | 1.0 (0.039) | 0.13 (0.005) | 1.9 (0.075) | 1.8 (0.071) | 2.2 (0.087) | 98.30 |
| C | 6032-28 | 6.0 ±0.3 (0.236 ±0.012) | 3.2 ±0.3 (0.126 ±0.012) | 2.5 ±0.3 (0.098 ±0.012) | 2.2 (0.087) | 1.3 (0.051) | 0.5 (0.020) | 0.10 ±0.10 (0.004 ±0.004) | 0.9 (0.035) | 1.0 (0.039) | 0.13 (0.005) | 3.1 (0.122) | 2.8 (0.110) | 2.4 (0.095) | 193.46 |
| D | 7343-31 | 7.3 ±0.3 (0.287 ±0.012) | 4.3 ±0.3 (0.169 ±0.012) | 2.8 ±0.3 (0.110 ±0.012) | 2.4 (0.095) | 1.3 (0.051) | 0.5 (0.020) | 0.10 ±0.10 (0.004 ±0.004) | 0.9 (0.035) | 1.0 (0.039) | 0.13 (0.005) | 3.8 (0.150) | 3.5 (0.138) | 3.5 (0.138) | 307.51 |
| O | 7360-43 | 7.3 ±0.3 (0.287 ±0.012) | 6.0 ±0.3 (0.236 ±0.012) | 4.0 ±0.3 (0.157 ±0.012) | 4.1 (0.161) | 1.3 (0.051) | N/A | 0.10 ±0.10 (0.004 ±0.004) | N/A | N/A | 0.13 (0.005) | 3.8 (0.150) | 3.5 (0.138) | 3.5 (0.138) | 696.00 |
| X | 7343-43 | 7.3 ±0.3 (0.287 ±0.012) | 4.3 ±0.3 (0.169 ±0.012) | 4.0 ±0.3 (0.157 ±0.012) | 2.4 (0.095) | 1.3 (0.051) | 0.5 (0.020) | 0.10 ±0.10 (0.004 ±0.004) | 1.7 (0.067) | 1.0 (0.039) | 0.13 (0.005) | 3.8 (0.150) | 3.5 (0.138) | 3.5 (0.138) | 410.89 |
| Y | 7343-40 | 7.3 ±0.3 (0.287 ±0.012) | 4.3 ±0.3 (0.169 ±0.012) | 3.8 ±0.2 (0.150 ±0.008) | 2.4 (0.095) | 1.3 (0.051) | 0.5 (0.020) | 0.10 ±0.10 (0.004 ±0.004) | 1.7 (0.067) | 1.0 (0.039) | 0.13 (0.005) | 3.8 (0.150) | 3.5 (0.138) | 3.5 (0.138) | 378.06 |

*Notes: (Ref) – Dimensions provided for reference only.*
*These weights are provided as reference. If exact weights are needed, please contact your KEMET Sales Representative*

## Table 1 – Ratings & Part Number Reference

| Rated Voltage | Rated Cap | Case Code/ Case Size | KEMET Part Number | DLA Drawing Number 04051/04052 | Improved Humidity | DC Leakage | DF | ESR | Maximum Allowable Ripple Current | Maximum Operating Temp. |
|---|---|---|---|---|---|---|---|---|---|---|
| VDC at 105°C | µF | KEMET/EIA | (See below for part options) | Part Number | (85°C/85%) Capable | µA at 25°C Maximum | % at 25°C 120 Hz Maximum | mΩ at 25°C 100 kHz Maximum | (rms) mA at 45°C 100 kHz | °C |
| 2.5 | 330 | D/7343-31 | T540D337M2R5AH(1)10 | 04051-002(2) | | 83 | 10 | 25 | 3,000 | 125 |
| 2.5 | 330 | D/7343-31 | T540D337(5)2R5(3)(6)(1)10 | N/A | | 83 | 10 | 25 | 3,000 | 125 |
| 2.5 | 330 | D/7343-31 | T540D337(5)2R5(3)H(7)05 | N/A | • | 83 | 10 | 40 | 2,372 | 125 |
| 2.5 | 470 | D/7343-31 | T540D477M2R5AH(1)10 | 04051-003(2) | | 118 | 10 | 25 | 3,000 | 125 |
| 2.5 | 470 | D/7343-31 | T540D477(5)2R5(3)(6)(1)10 | N/A | | 118 | 10 | 25 | 3,000 | 125 |
| 2.5 | 470 | D/7343-31 | T540D477(5)2R5(3)H(7)05 | N/A | • | 118 | 10 | 40 | 2,372 | 125 |
| 2.5 | 470 | D/7343-31 | T541D477M2R5AH(1)20 | 04052-002(2) | | 118 | 10 | 6 | 6,519 | 125 |
| 2.5 | 470 | D/7343-31 | T541D477(5)2R5(3)(6)(1)20 | N/A | | 118 | 10 | 6 | 6,519 | 125 |
| 2.5 | 470 | D/7343-31 | T541D477M2R5AH(1)10 | 04052-003(2) | | 118 | 10 | 10 | 5,050 | 125 |
| 2.5 | 470 | D/7343-31 | T541D477(5)2R5(3)(6)(1)10 | N/A | | 118 | 10 | 10 | 5,050 | 125 |
| 2.5 | 680 | D/7343-31 | T540D687M2R5AH(1)10 | 04051-004(2) | | 170 | 10 | 25 | 3,000 | 125 |
| 2.5 | 680 | D/7343-31 | T540D687(5)2R5(3)(6)(1)10 | N/A | | 170 | 10 | 25 | 3,000 | 125 |
| 2.5 | 680 | D/7343-31 | T540D687(5)2R5(3)H(7)05 | N/A | • | 170 | 10 | 40 | 2,372 | 125 |
| 2.5 | 680 | D/7343-31 | T541D687M2R5AH(1)20 | 04052-007(2) | | 170 | 10 | 6 | 6,519 | 125 |
| 2.5 | 680 | D/7343-31 | T541D687(5)2R5(3)(6)(1)20 | N/A | | 170 | 10 | 6 | 6,519 | 125 |
| 2.5 | 680 | D/7343-31 | T541D687M2R5AH(1)10 | 04052-008(2) | | 170 | 10 | 10 | 5,050 | 125 |
| 2.5 | 680 | D/7343-31 | T541D687(5)2R5(3)(6)(1)10 | N/A | | 170 | 10 | 10 | 5,050 | 125 |
| 2.5 | 680 | Y/7343-40 | T541Y687M2R5AH(1)30 | 04052-005(2) | | 170 | 10 | 5 | 7,253 | 125 |
| 2.5 | 680 | Y/7343-40 | T541Y687(5)2R5(3)(6)(1)30 | N/A | | 170 | 10 | 5 | 7,253 | 125 |
| 2.5 | 680 | Y/7343-40 | T541Y687M2R5AH(1)20 | 04052-006(2) | | 170 | 10 | 6 | 6,621 | 125 |
| 2.5 | 680 | Y/7343-40 | T541Y687(5)2R5(3)(6)(1)20 | N/A | | 170 | 10 | 6 | 6,621 | 125 |
| 2.5 | 680 | Y/7343-40 | T541Y687M2R5AH(1)10 | 04052-042(2) | | 170 | 10 | 10 | 5,128 | 125 |
| 2.5 | 680 | Y/7343-40 | T541Y687(5)2R5(3)(6)(1)10 | N/A | | 170 | 10 | 10 | 5,128 | 125 |
| 2.5 | 1000 | X/7343-43 | T541X108M2R5AH(1)30 | 04052-009(2) | | 250 | 10 | 5 | 7,348 | 125 |
| 2.5 | 1000 | X/7343-43 | T541X108(5)2R5(3)(6)(1)30 | N/A | | 250 | 10 | 5 | 7,348 | 125 |
| 2.5 | 1000 | X/7343-43 | T541X108M2R5AH(1)20 | 04052-010(2) | | 250 | 10 | 6 | 6,708 | 125 |
| 2.5 | 1000 | X/7343-43 | T541X108(5)2R5(3)(6)(1)20 | N/A | | 250 | 10 | 6 | 6,708 | 125 |
| 2.5 | 1000 | X/7343-43 | T541X108M2R5AH(1)10 | 04052-043(2) | | 250 | 10 | 10 | 5,196 | 125 |
| 2.5 | 1000 | X/7343-43 | T541X108(5)2R5(3)(6)(1)10 | N/A | | 250 | 10 | 10 | 5,196 | 125 |
| 2.5 | 1000 | X/7343-43 | T541X108(5)2R5(3)(6)(7)05 | N/A | • | 250 | 10 | 12 | 4,743 | 125 |
| 2.5 | 1500 | X/7343-43 | T541X158M2R5AH(1)30 | 04052-011(2) | | 375 | 10 | 5 | 7,348 | 125 |
| 2.5 | 1500 | X/7343-43 | T541X158(5)2R5(3)(6)(1)30 | N/A | | 375 | 10 | 5 | 7,348 | 125 |
| 2.5 | 1500 | X/7343-43 | T541X158M2R5AH(1)20 | 04052-044(2) | | 375 | 10 | 6 | 6,708 | 125 |
| 2.5 | 1500 | X/7343-43 | T541X158(5)2R5(3)(6)(1)20 | N/A | | 375 | 10 | 6 | 6,708 | 125 |
| 2.5 | 1500 | X/7343-43 | T541X158M2R5AH(1)10 | 04052-045(2) | | 375 | 10 | 10 | 5,196 | 125 |
| 2.5 | 1500 | X/7343-43 | T541X158(5)2R5(3)(6)(1)10 | N/A | | 375 | 10 | 10 | 5,196 | 125 |
| 2.5 | 1500 | X/7343-43 | T541X158(5)2R5(3)(6)(7)05 | N/A | • | 375 | 10 | 12 | 4,743 | 125 |
| 3 | 100 | B/3528-21 | T540B107M003AH(1)10 | 04051-005(2) | | 30 | 8 | 80 | 1,260 | 125 |
| 3 | 100 | B/3528-21 | T540B107(5)003(3)(6)(1)10 | N/A | | 30 | 8 | 80 | 1,260 | 125 |
| 3 | 100 | B/3528-21 | T540B107(5)003(3)H(7)10 | N/A | • | 30 | 8 | 80 | 1,260 | 125 |
| 3 | 150 | B/3528-21 | T540B157M003AH(1)10 | 04051-006(2) | | 45 | 8 | 80 | 1,260 | 125 |
| 3 | 150 | B/3528-21 | T540B157(5)003(3)(6)(1)10 | N/A | | 45 | 8 | 80 | 1,260 | 125 |
| 3 | 150 | B/3528-21 | T540B157(5)003(3)H(7)10 | N/A | • | 45 | 8 | 80 | 1,260 | 125 |
| 3 | 330 | D/7343-31 | T540D337M003AH(1)10 | 04051-007(2) | | 99 | 10 | 25 | 3,000 | 125 |
| 3 | 330 | D/7343-31 | T540D337(5)003(3)(6)(1)10 | N/A | | 99 | 10 | 25 | 3,000 | 125 |
| 3 | 330 | D/7343-31 | T540D337(5)003(3)H(7)05 | N/A | • | 99 | 10 | 40 | 2,372 | 125 |
| 3 | 470 | D/7343-31 | T540D477M003AH(1)10 | 04051-008(2) | | 141 | 10 | 25 | 3,000 | 125 |
| 3 | 470 | D/7343-31 | T540D477(5)003(3)(6)(1)10 | N/A | | 141 | 10 | 25 | 3,000 | 125 |
| VDC at 105°C | µF | KEMET/EIA | (See below for part options) | Part Number | (85°C/85%) Capable | µA at 25°C Maximum | % at 25°C 120 Hz Maximum | mΩ at 25°C 100 kHz Maximum | (rms) mA at 45°C 100 kHz | °C |
| Rated Voltage | Rated Cap | Case Code/ Case Size | KEMET Part Number | DLA Drawing Number 04051/04052 | Improved Humidity | DC Leakage | DF | ESR | Maximum Allowable Ripple Current | Maximum Operating Temp. |

*(1) To complete KEMET part number, insert 65 = 4 cycles +25°C, 66 = 10 cycles +25°C, 67 = 10 cycles −55°C and +85°C, Designates surge current option.*
*(2) To complete DLA part number, insert Blank = None, A = 10 cycles +25°C ±5°C After Voltage Aging, B = 10 cycles −55°C and +85°C ±5°C After Voltage Aging.*
*(3) To complete KEMET part number for non-DLA, insert A = N/A ,insert B = 0.1%/1,000 hours, C = 0.01%/1,000 hours, D=0.001%/1,000 hours. Designates Reliability Level.*
*(4) To complete KEMET part number for non-DLA, insert A = N/A, insert B = 0.1%/1,000 hours or C = 0.01%/1,000 hours. Designates Reliability Level.*
*(5) To complete KEMET part number, insert M for ±20% or K for ±10%. Designates capacitance tolerance.*
*(6) To complete KEMET part number insert, H = Solder Plated, T = 100% Tin (Sn). Designates termination finish.*
*(7) To complete KEMET part number, insert 85 = 4 cycles at 25°C ±5°C ** + improved humidity capability, 86 = 10 cycles at 25°C ±5°C*** + improved humidity capability, 87= 10 cycles at −55°C +0°C/−5°C and +85°C ±5°C*** + improved humidity capability. Designates surge current option on improved humidity capability.*

***Part Numbers marked in blue font are "Under Development." Engineering samples available upon request.***

## Table 1 – Ratings & Part Number Reference cont.

| Rated Voltage | Rated Cap | Case Code/ Case Size | KEMET Part Number | DLA Drawing Number 04051/04052 | Improved Humidity | DC Leakage | DF | ESR | Maximum Allowable Ripple Current | Maximum Operating Temp. |
|---|---|---|---|---|---|---|---|---|---|---|
| VDC at 105°C | µF | KEMET/EIA | (See below for part options) | Part Number | (85°C/85%) Capable | µA at 25°C Maximum | % at 25°C 120 Hz Maximum | mΩ at 25°C 100 kHz Maximum | (rms) mA at 45°C 100 kHz | °C |
| 3 | 470 | D/7343-31 | T540D477(5)003(3)H(7)05 | N/A | • | 141 | 10 | 40 | 2,372 | 125 |
| 3 | 470 | D/7343-31 | T541D477M003AH(1)10 | 04052-012(2) | | 141 | 10 | 10 | 5,050 | 125 |
| 3 | 470 | D/7343-31 | T541D477(5)003(3)(6)(1)10 | N/A | | 141 | 10 | 10 | 5,050 | 125 |
| 3 | 680 | D/7343-31 | T540D687M003AH(1)10 | 04051-009(2) | | 204 | 10 | 25 | 3,000 | 125 |
| 3 | 680 | D/7343-31 | T540D687(5)003(3)(6)(1)10 | N/A | | 204 | 10 | 25 | 3,000 | 125 |
| 3 | 680 | D/7343-31 | T540D687(5)003(3)H(7)05 | N/A | • | 204 | 10 | 40 | 2,372 | 125 |
| 3 | 680 | D/7343-31 | T541D687M003AH(1)10 | 04052-013(2) | | 204 | 10 | 10 | 5,050 | 125 |
| 3 | 680 | D/7343-31 | T541D687(5)003(3)(6)(1)10 | N/A | | 204 | 10 | 10 | 5,050 | 125 |
| 3 | 1000 | X/7343-43 | T541X108M003AH(1)10 | 04052-014(2) | | 300 | 10 | 10 | 5,196 | 125 |
| 3 | 1000 | X/7343-43 | T541X108(5)003(3)(6)(1)10 | N/A | | 300 | 10 | 10 | 5,196 | 125 |
| 3 | 1000 | X/7343-43 | T541X108(5)003(3)(6)(7)05 | N/A | • | 300 | 10 | 12 | 4,743 | 125 |
| 3 | 1500 | X/7343-43 | T541X158M003AH(1)10 | 04052-015(2) | | 450 | 10 | 8 | 5,809 | 125 |
| 3 | 1500 | X/7343-43 | T541X158(5)003(3)(6)(1)10 | N/A | | 450 | 10 | 8 | 5,809 | 125 |
| 3 | 1500 | X/7343-43 | T541X158(5)003(3)(6)(7)05 | N/A | • | 450 | 10 | 12 | 4,743 | 125 |
| 3 | 2000 | O/7360-43 | T541O208M003(3)(6)(1)10 | N/A | | 600 | 10 | 10 | 5,480 | 125 |
| 4 | 68 | B/3528-21 | T540B686M004AH(1)10 | 04051-011(2) | | 28 | 8 | 80 | 1,260 | 125 |
| 4 | 68 | B/3528-21 | T540B686(5)004(3)(6)(1)10 | N/A | | 28 | 8 | 80 | 1,260 | 125 |
| 4 | 68 | B/3528-21 | T540B686(5)004(3)H(7)10 | N/A | • | 28 | 8 | 80 | 1,260 | 125 |
| 4 | 100 | B/3528-21 | T540B107M004AH(1)10 | 04051-012(2) | | 40 | 8 | 80 | 1,260 | 125 |
| 4 | 100 | B/3528-21 | T540B107(5)004(3)(6)(1)10 | N/A | | 40 | 8 | 80 | 1,260 | 125 |
| 4 | 100 | B/3528-21 | T540B107(5)004(3)H(7)10 | N/A | • | 40 | 8 | 80 | 1,260 | 125 |
| 4 | 220 | D/7343-31 | T540D227M004AH(1)10 | 04051-013(2) | | 88 | 10 | 25 | 3,000 | 125 |
| 4 | 220 | D/7343-31 | T540D227(5)004(3)(6)(1)10 | N/A | | 88 | 10 | 25 | 3,000 | 125 |
| 4 | 220 | D/7343-31 | T540D227(5)004(3)H(7)05 | N/A | • | 88 | 10 | 40 | 2,372 | 125 |
| 4 | 330 | D/7343-31 | T540D337M004AH(1)10 | 04051-014(2) | | 132 | 10 | 25 | 3,000 | 125 |
| 4 | 330 | D/7343-31 | T540D337(5)004(3)(6)(1)10 | N/A | | 132 | 10 | 25 | 3,000 | 125 |
| 4 | 330 | D/7343-31 | T540D337(5)004(3)H(7)05 | N/A | • | 132 | 10 | 40 | 2,372 | 125 |
| 4 | 330 | D/7343-31 | T541D337M004AH(1)20 | 04052-017(2) | | 132 | 10 | 6 | 6,519 | 125 |
| 4 | 330 | D/7343-31 | T541D337(5)004(3)(6)(1)20 | N/A | | 132 | 10 | 6 | 6,519 | 125 |
| 4 | 330 | D/7343-31 | T541D337M004AH(1)10 | 04052-046(2) | | 132 | 10 | 10 | 5,050 | 125 |
| 4 | 330 | D/7343-31 | T541D337(5)004(3)(6)(1)10 | N/A | | 132 | 10 | 10 | 5,050 | 125 |
| 4 | 470 | D/7343-31 | T540D477M004AH(1)20 | 04051-015(2) | | 188 | 10 | 25 | 3,000 | 125 |
| 4 | 470 | D/7343-31 | T540D477(5)004(3)(6)(1)20 | N/A | | 188 | 10 | 25 | 3,000 | 125 |
| 4 | 470 | D/7343-31 | T540D477M004AH(1)10 | 04051-016(2) | | 188 | 10 | 40 | 2,372 | 125 |
| 4 | 470 | D/7343-31 | T540D477(5)004(3)(6)(1)10 | N/A | | 188 | 10 | 40 | 2,372 | 125 |
| 4 | 470 | D/7343-31 | T540D477(5)004(3)H(7)10 | N/A | • | 188 | 10 | 40 | 2,372 | 125 |
| 4 | 470 | D/7343-31 | T541D477M004AH(1)10 | 04052-018(2) | | 188 | 10 | 10 | 5,050 | 125 |
| 4 | 470 | D/7343-31 | T541D477(5)004(3)(6)(1)10 | N/A | | 188 | 10 | 10 | 5,050 | 125 |
| 4 | 470 | Y/7343-40 | T541Y477M004AH(1)30 | 04052-019(2) | | 188 | 10 | 5 | 7,253 | 125 |
| 4 | 470 | Y/7343-40 | T541Y477(5)004(3)(6)(1)30 | N/A | | 188 | 10 | 5 | 7,253 | 125 |
| 4 | 470 | Y/7343-40 | T541Y477M004AH(1)20 | 04052-020(2) | | 188 | 10 | 6 | 6,621 | 125 |
| 4 | 470 | Y/7343-40 | T541Y477(5)004(3)(6)(1)20 | N/A | | 188 | 10 | 6 | 6,621 | 125 |
| 4 | 470 | Y/7343-40 | T541Y477M004AH(1)10 | 04052-047(2) | | 188 | 10 | 10 | 5,128 | 125 |
| 4 | 470 | Y/7343-40 | T541Y477(5)004(3)(6)(1)10 | N/A | | 188 | 10 | 10 | 5,128 | 125 |
| 4 | 680 | X/7343-43 | T541X687M004AH(1)30 | 04052-021(2) | | 272 | 10 | 5 | 7,348 | 125 |
| 4 | 680 | X/7343-43 | T541X687(5)004(3)(6)(1)30 | N/A | | 272 | 10 | 5 | 7,348 | 125 |
| 4 | 680 | X/7343-43 | T541X687M004AH(1)20 | 04052-022(2) | | 272 | 10 | 6 | 6,708 | 125 |
| 4 | 680 | X/7343-43 | T541X687(5)004(3)(6)(1)20 | N/A | | 272 | 10 | 6 | 6,708 | 125 |
| VDC at 105°C | µF | KEMET/EIA | (See below for part options) | Part Number | (85°C/85%) Capable | µA at 25°C Maximum | % at 25°C 120 Hz Maximum | mΩ at 25°C 100 kHz Maximum | (rms) mA at 45°C 100 kHz | °C |
| Rated Voltage | Rated Cap | Case Code/ Case Size | KEMET Part Number | DLA Drawing Number 04051/04052 | Improved Humidity | DC Leakage | DF | ESR | Maximum Allowable Ripple Current | Maximum Operating Temp. |

*(1) To complete KEMET part number, insert 65 = 4 cycles +25°C, 66 = 10 cycles +25°C, 67 = 10 cycles −55°C and +85°C, Designates surge current option.*
*(2) To complete DLA part number, insert Blank = None, A = 10 cycles +25°C ±5°C After Voltage Aging, B = 10 cycles −55°C and +85°C ±5°C After Voltage Aging.*
*(3) To complete KEMET part number for non-DLA, insert A = N/A ,insert B = 0.1%/1,000 hours, C = 0.01%/1,000 hours, D=0.001%/1,000 hours. Designates Reliability Level.*
*(4) To complete KEMET part number for non-DLA, insert A = N/A, insert B = 0.1%/1,000 hours or C = 0.01%/1,000 hours. Designates Reliability Level.*
*(5) To complete KEMET part number, insert M for ±20% or K for ±10%. Designates capacitance tolerance.*
*(6) To complete KEMET part number insert, H = Solder Plated, T = 100% Tin (Sn). Designates termination finish.*
*(7) To complete KEMET part number, insert 85 = 4 cycles at 25°C ±5°C ** + improved humidity capability, 86 = 10 cycles at 25°C ±5°C*** + improved humidity capability, 87= 10 cycles at −55°C +0°C/−5°C and +85°C ±5°C*** + improved humidity capability. Designates surge current option on improved humidity capability.*

***Part Numbers marked in blue font are "Under Development." Engineering samples available upon request.***

## Table 1 – Ratings & Part Number Reference cont.

| Rated Voltage | Rated Cap | Case Code/ Case Size | KEMET Part Number | DLA Drawing Number 04051/04052 | Improved Humidity | DC Leakage | DF | ESR | Maximum Allowable Ripple Current | Maximum Operating Temp. |
|---|---|---|---|---|---|---|---|---|---|---|
| VDC at 105°C | µF | KEMET/EIA | (See below for part options) | Part Number | (85°C/85%) Capable | µA at 25°C Maximum | % at 25°C 120 Hz Maximum | mΩ at 25°C 100 kHz Maximum | (rms) mA at 45°C 100 kHz | °C |
| 4 | 680 | X/7343-43 | T541X687M004AH(1)10 | 04052-023(2) | | 272 | 10 | 10 | 5,196 | 125 |
| 4 | 680 | X/7343-43 | T541X687(5)004(3)(6)(1)10 | N/A | | 272 | 10 | 10 | 5,196 | 125 |
| 4 | 680 | X/7343-43 | T541X687(5)004(3)(6)(7)05 | N/A | • | 272 | 10 | 12 | 4,743 | 125 |
| 4 | 1000 | X/7343-43 | T541X108M004AH(1)20 | 04052-024(2) | | 400 | 10 | 6 | 6,708 | 125 |
| 4 | 1000 | X/7343-43 | T541X108(5)004(3)(6)(1)20 | N/A | | 400 | 10 | 6 | 6,708 | 125 |
| 4 | 1000 | X/7343-43 | T541X108M004AH(1)10 | 04052-048(2) | | 400 | 10 | 10 | 5,196 | 125 |
| 4 | 1000 | X/7343-43 | T541X108(5)004(3)(6)(1)10 | N/A | | 400 | 10 | 10 | 5,196 | 125 |
| 4 | 1000 | X/7343-43 | T541X108(5)004(3)(6)(7)05 | N/A | • | 400 | 10 | 12 | 4,743 | 125 |
| 4 | 1500 | O/7360-43 | T541O158M004(3)(6)(1)10 | N/A | | 600 | 10 | 10 | 5,480 | 125 |
| 6.3 | 33 | B/3528-21 | T540B336M006AH(1)10 | 04051-017(2) | | 21 | 8 | 80 | 1,260 | 125 |
| 6.3 | 33 | B/3528-21 | T540B336(5)006(3)(6)(1)10 | N/A | | 21 | 8 | 80 | 1,260 | 125 |
| 6.3 | 33 | B/3528-21 | T540B336(5)006(3)H(7)10 | N/A | • | 21 | 8 | 80 | 1,260 | 125 |
| 6.3 | 47 | B/3528-21 | T540B476M006AH(1)10 | 04051-019(2) | | 30 | 8 | 80 | 1,260 | 125 |
| 6.3 | 47 | B/3528-21 | T540B476(5)006(3)(6)(1)10 | N/A | | 30 | 8 | 80 | 1,260 | 125 |
| 6.3 | 47 | B/3528-21 | T540B476(5)006(3)H(7)10 | N/A | • | 30 | 8 | 80 | 1,260 | 125 |
| 6.3 | 68 | B/3528-21 | T540B686M006AH(1)10 | 04051-020(2) | | 43 | 8 | 80 | 1,260 | 125 |
| 6.3 | 68 | B/3528-21 | T540B686(5)006(3)(6)(1)10 | N/A | | 43 | 8 | 80 | 1,260 | 125 |
| 6.3 | 68 | B/3528-21 | T540B686(5)006(3)H(7)10 | N/A | • | 43 | 8 | 80 | 1,260 | 125 |
| 6.3 | 150 | D/7343-31 | T540D157M006AH(1)10 | 04051-021(2) | | 95 | 10 | 25 | 3,000 | 125 |
| 6.3 | 150 | D/7343-31 | T540D157(5)006(3)(6)(1)10 | N/A | | 95 | 10 | 25 | 3,000 | 125 |
| 6.3 | 150 | D/7343-31 | T540D157(5)006(3)H(7)05 | N/A | • | 95 | 10 | 40 | 2,372 | 125 |
| 6.3 | 220 | D/7343-31 | T540D227M006AH(1)10 | 04051-022(2) | | 139 | 10 | 25 | 3,000 | 125 |
| 6.3 | 220 | D/7343-31 | T540D227(5)006(3)(6)(1)10 | N/A | | 139 | 10 | 25 | 3,000 | 125 |
| 6.3 | 220 | D/7343-31 | T540D227(5)006(3)H(7)05 | N/A | • | 139 | 10 | 40 | 2,372 | 125 |
| 6.3 | 220 | D/7343-31 | T541D227M006AH(1)20 | 04052-026(2) | | 139 | 10 | 6 | 6,519 | 125 |
| 6.3 | 220 | D/7343-31 | T541D227(5)006(3)(6)(1)20 | N/A | | 139 | 10 | 6 | 6,519 | 125 |
| 6.3 | 220 | D/7343-31 | T541D227M006AH(1)10 | 04052-049(2) | | 139 | 10 | 10 | 5,050 | 125 |
| 6.3 | 220 | D/7343-31 | T541D227(5)006(3)(6)(1)10 | N/A | | 139 | 10 | 10 | 5,050 | 125 |
| 6.3 | 330 | D/7343-31 | T540D337M006AH(1)20 | 04051-023(2) | | 208 | 10 | 25 | 3,000 | 125 |
| 6.3 | 330 | D/7343-31 | T540D337(5)006(3)(6)(1)20 | N/A | | 208 | 10 | 25 | 3,000 | 125 |
| 6.3 | 330 | D/7343-31 | T540D337M006AH(1)10 | 04051-024(2) | | 208 | 10 | 40 | 2,372 | 125 |
| 6.3 | 330 | D/7343-31 | T540D337(5)006(3)(6)(1)10 | N/A | | 208 | 10 | 40 | 2,372 | 125 |
| 6.3 | 330 | D/7343-31 | T540D337(5)006(3)H(7)10 | N/A | • | 208 | 10 | 40 | 2,372 | 125 |
| 6.3 | 330 | D/7343-31 | T541D337M006AH(1)10 | 04052-027(2) | | 208 | 10 | 10 | 5,050 | 125 |
| 6.3 | 330 | D/7343-31 | T541D337(5)006(3)(6)(1)10 | N/A | | 208 | 10 | 10 | 5,050 | 125 |
| 6.3 | 330 | Y/7343-40 | T541Y337M006AH(1)30 | 04052-028(2) | | 208 | 10 | 5 | 7,253 | 125 |
| 6.3 | 330 | Y/7343-40 | T541Y337(5)006(3)(6)(1)30 | N/A | | 208 | 10 | 5 | 7,253 | 125 |
| 6.3 | 330 | Y/7343-40 | T541Y337M006AH(1)20 | 04052-029(2) | | 208 | 10 | 6 | 6,621 | 125 |
| 6.3 | 330 | Y/7343-40 | T541Y337(5)006(3)(6)(1)20 | N/A | | 208 | 10 | 6 | 6,621 | 125 |
| 6.3 | 330 | Y/7343-40 | T541Y337M006AH(1)10 | 04052-030(2) | | 208 | 10 | 10 | 5,128 | 125 |
| 6.3 | 330 | Y/7343-40 | T541Y337(5)006(3)(6)(1)10 | N/A | | 208 | 10 | 10 | 5,128 | 125 |
| 6.3 | 470 | X/7343-43 | T541X477M006AH(1)30 | 04052-031(2) | | 296 | 10 | 5 | 7,348 | 125 |
| 6.3 | 470 | X/7343-43 | T541X477(5)006(3)(6)(1)30 | N/A | | 296 | 10 | 5 | 7,348 | 125 |
| 6.3 | 470 | X/7343-43 | T541X477M006AH(1)20 | 04052-032(2) | | 296 | 10 | 6 | 6,708 | 125 |
| 6.3 | 470 | X/7343-43 | T541X477(5)006(3)(6)(1)20 | N/A | | 296 | 10 | 6 | 6,708 | 125 |
| 6.3 | 470 | X/7343-43 | T541X477M006AH(1)10 | 04052-033(2) | | 296 | 10 | 10 | 5,196 | 125 |
| 6.3 | 470 | X/7343-43 | T541X477(5)006(3)(6)(1)10 | N/A | | 296 | 10 | 10 | 5,196 | 125 |
| 6.3 | 470 | X/7343-43 | T541X477(5)006(3)(6)(7)05 | N/A | • | 296 | 10 | 12 | 4,743 | 125 |
| VDC at 105°C | µF | KEMET/EIA | (See below for part options) | Part Number | (85°C/85%) Capable | µA at 25°C Maximum | % at 25°C 120 Hz Maximum | mΩ at 25°C 100 kHz Maximum | (rms) mA at 45°C 100 kHz | °C |
| Rated Voltage | Rated Cap | Case Code/ Case Size | KEMET Part Number | DLA Drawing Number 04051/04052 | Improved Humidity | DC Leakage | DF | ESR | Maximum Allowable Ripple Current | Maximum Operating Temp. |

*(1) To complete KEMET part number, insert 65 = 4 cycles +25°C, 66 = 10 cycles +25°C, 67 = 10 cycles −55°C and +85°C, Designates surge current option.*
*(2) To complete DLA part number, insert Blank = None, A = 10 cycles +25°C ±5°C After Voltage Aging, B = 10 cycles −55°C and +85°C ±5°C After Voltage Aging.*
*(3) To complete KEMET part number for non-DLA, insert A = N/A ,insert B = 0.1%/1,000 hours, C = 0.01%/1,000 hours, D=0.001%/1,000 hours. Designates Reliability Level.*
*(4) To complete KEMET part number for non-DLA, insert A = N/A, insert B = 0.1%/1,000 hours or C = 0.01%/1,000 hours. Designates Reliability Level.*
*(5) To complete KEMET part number, insert M for ±20% or K for ±10%. Designates capacitance tolerance.*
*(6) To complete KEMET part number insert, H = Solder Plated, T = 100% Tin (Sn). Designates termination finish.*
*(7) To complete KEMET part number, insert 85 = 4 cycles at 25°C ±5°C ** + improved humidity capability, 86 = 10 cycles at 25°C ±5°C*** + improved humidity capability, 87= 10 cycles at −55°C +0°C/−5°C and +85°C ±5°C*** + improved humidity capability. Designates surge current option on improved humidity capability.*

***Part Numbers marked in blue font are "Under Development." Engineering samples available upon request.***

## Table 1 – Ratings & Part Number Reference cont.

| Rated Voltage | Rated Cap | Case Code/ Case Size | KEMET Part Number | DLA Drawing Number 04051/04052 | Improved Humidity | DC Leakage | DF | ESR | Maximum Allowable Ripple Current | Maximum Operating Temp. |
|---|---|---|---|---|---|---|---|---|---|---|
| VDC at 105°C | µF | KEMET/EIA | (See below for part options) | Part Number | (85°C/85%) Capable | µA at 25°C Maximum | % at 25°C 120 Hz Maximum | mΩ at 25°C 100 kHz Maximum | (rms) mA at 45°C 100 kHz | °C |
| 6.3 | 680 | X/7343-43 | T541X687(5)006A(6)(7)10 | N/A | • | 428 | 10 | 15 | 4,243 | 125 |
| 6.3 | 1000 | O/7360-43 | T541O108M006(3)(6)(1)10 | N/A | | 630 | 10 | 12 | 5,000 | 125 |
| 10 | 22 | A/3216-18 | T540A226M010(4)(6)(1)10 | N/A | | 22 | 8 | 80 | 1,183 | 125 |
| 10 | 22 | B/3528-21 | T540B226M010AH(1)10 | 04051-025(2) | | 22 | 8 | 80 | 1,260 | 125 |
| 10 | 22 | B/3528-21 | T540B226(5)010(3)(6)(1)10 | N/A | | 22 | 8 | 80 | 1,260 | 125 |
| 10 | 22 | B/3528-21 | T540B226(5)010(3)(6)(7)10 | N/A | • | 22 | 8 | 80 | 1,260 | 125 |
| 10 | 33 | B/3528-21 | T540B336M010AH(1)10 | 04051-027(2) | | 33 | 8 | 80 | 1,260 | 125 |
| 10 | 33 | B/3528-21 | T540B336(5)010(3)(6)(1)10 | N/A | | 33 | 8 | 80 | 1,260 | 125 |
| 10 | 33 | B/3528-21 | T540B336(5)010(3)(6)(7)10 | N/A | • | 33 | 8 | 80 | 1,260 | 125 |
| 10 | 47 | B/3528-21 | T540B476M010(4)(6)(1)20 | N/A | | 47 | 8 | 35 | 1,905 | 125 |
| 10 | 47 | B/3528-21 | T540B476M010(4)(6)(1)10 | N/A | | 47 | 8 | 100 | 1,127 | 125 |
| 10 | 100 | D/7343-31 | T540D107M010AH(1)20 | 04051-028(2) | | 100 | 10 | 25 | 3,000 | 125 |
| 10 | 100 | D/7343-31 | T540D107(5)010(3)(6)(1)20 | N/A | | 100 | 10 | 25 | 3,000 | 125 |
| 10 | 100 | D/7343-31 | T540D107M010AH(1)10 | 04051-029(2) | | 100 | 10 | 55 | 2,023 | 125 |
| 10 | 100 | D/7343-31 | T540D107(5)010(3)(6)(1)10 | N/A | | 100 | 10 | 55 | 2,023 | 125 |
| 10 | 100 | D/7343-31 | T540D107(5)010(3)(6)(7)10 | N/A | • | 100 | 10 | 55 | 2,023 | 125 |
| 10 | 150 | D/7343-31 | T540D157M010AH(1)20 | 04051-030(2) | | 150 | 10 | 25 | 3,000 | 125 |
| 10 | 150 | D/7343-31 | T540D157(5)010(3)(6)(1)20 | N/A | | 150 | 10 | 25 | 3,000 | 125 |
| 10 | 150 | D/7343-31 | T540D157M010AH(1)10 | 04051-031(2) | | 150 | 10 | 55 | 2,023 | 125 |
| 10 | 150 | D/7343-31 | T540D157(5)010(3)(6)(1)10 | N/A | | 150 | 10 | 55 | 2,023 | 125 |
| 10 | 150 | D/7343-31 | T540D157(5)010(3)(6)(7)10 | N/A | • | 150 | 10 | 55 | 2,023 | 125 |
| 10 | 150 | D/7343-31 | T541D157M010AH(1)20 | 04052-035(2) | | 150 | 10 | 6 | 6,519 | 125 |
| 10 | 150 | D/7343-31 | T541D157(5)010(3)(6)(1)20 | N/A | | 150 | 10 | 6 | 6,519 | 125 |
| 10 | 150 | D/7343-31 | T541D157M010AH(1)10 | 04052-050(2) | | 150 | 10 | 10 | 5,050 | 125 |
| 10 | 150 | D/7343-31 | T541D157(5)010(3)(6)(1)10 | N/A | | 150 | 10 | 10 | 5,050 | 125 |
| 10 | 220 | D/7343-31 | T540D227M010AH(1)10 | 04051-032(2) | | 220 | 10 | 25 | 3,000 | 125 |
| 10 | 220 | D/7343-31 | T540D227(5)010(3)(6)(1)10 | N/A | | 220 | 10 | 25 | 3,000 | 125 |
| 10 | 220 | D/7343-31 | T540D227(5)010(3)(6)(7)05 | N/A | • | 220 | 10 | 35 | 3,000 | 125 |
| 10 | 220 | D/7343-31 | T541D227M010AH(1)20 | 04052-036(2) | | 220 | 10 | 6 | 6,519 | 125 |
| 10 | 220 | D/7343-31 | T541D227(5)010(3)(6)(1)20 | N/A | | 220 | 10 | 6 | 6,519 | 125 |
| 10 | 220 | D/7343-31 | T541D227M010AH(1)10 | 04052-037(2) | | 220 | 10 | 10 | 5,050 | 125 |
| 10 | 220 | D/7343-31 | T541D227(5)010(3)(6)(1)10 | N/A | | 220 | 10 | 10 | 5,050 | 125 |
| 10 | 220 | Y/7343-40 | T541Y227M010AH(1)20 | 04052-038(2) | | 220 | 10 | 6 | 6,621 | 125 |
| 10 | 220 | Y/7343-40 | T541Y227(5)010(3)(6)(1)20 | N/A | | 220 | 10 | 6 | 6,621 | 125 |
| 10 | 220 | Y/7343-40 | T541Y227M010AH(1)10 | 04052-051(2) | | 220 | 10 | 10 | 5,128 | 125 |
| 10 | 220 | Y/7343-40 | T541Y227(5)010(3)(6)(1)10 | N/A | | 220 | 10 | 10 | 5,128 | 125 |
| 10 | 330 | X/7343-43 | T541X337M010AH(1)30 | 04052-039(2) | | 330 | 10 | 5 | 7,348 | 125 |
| 10 | 330 | X/7343-43 | T541X337(5)010(4)(6)(1)30 | N/A | | 330 | 10 | 5 | 7,348 | 125 |
| 10 | 330 | X/7343-43 | T541X337M010AH(1)20 | 04052-040(2) | | 330 | 10 | 6 | 6,708 | 125 |
| 10 | 330 | X/7343-43 | T541X337(5)010(4)(6)(1)20 | N/A | | 330 | 10 | 6 | 6,708 | 125 |
| 10 | 330 | X/7343-43 | T541X337M010AH(1)10 | 04052-041(2) | | 330 | 10 | 10 | 5,196 | 125 |
| 10 | 330 | X/7343-43 | T541X337(5)010(3)(6)(1)10 | N/A | | 330 | 10 | 10 | 5,196 | 125 |
| 10 | 330 | X/7343-43 | T541X337(5)010(4)(6)(7)05 | N/A | • | 330 | 10 | 15 | 4,243 | 125 |
| 10 | 470 | X/7343-43 | T541X477(5)010(3)(6)(7)10 | N/A | • | 470 | 10 | 20 | 3,674 | 125 |
| 10 | 680 | O/7360-43 | T541O687M010(3)(6)(1)10 | N/A | | 680 | 10 | 15 | 4,470 | 125 |
| 16 | 47 | D/7343-31 | T540D476M016AH(1)20 | 04051-033(2) | | 76 | 10 | 35 | 2,535 | 125 |
| 16 | 47 | D/7343-31 | T540D476(5)016(3)(6)(1)20 | N/A | | 76 | 10 | 35 | 2,535 | 125 |
| 16 | 47 | D/7343-31 | T540D476M016AH(1)10 | 04051-034(2) | | 76 | 10 | 65 | 1,861 | 125 |
| VDC at 105°C | µF | KEMET/EIA | (See below for part options) | Part Number | (85°C/85%) Capable | µA at 25°C Maximum | % at 25°C 120 Hz Maximum | mΩ at 25°C 100 kHz Maximum | (rms) mA at 45°C 100 kHz | °C |
| Rated Voltage | Rated Cap | Case Code/ Case Size | KEMET Part Number | DLA Drawing Number 04051/04052 | Improved Humidity | DC Leakage | DF | ESR | Maximum Allowable Ripple Current | Maximum Operating Temp. |

*(1) To complete KEMET part number, insert 65 = 4 cycles +25°C, 66 = 10 cycles +25°C, 67 = 10 cycles −55°C and +85°C, Designates surge current option.*
*(2) To complete DLA part number, insert Blank = None, A = 10 cycles +25°C ±5°C After Voltage Aging, B = 10 cycles −55°C and +85°C ±5°C After Voltage Aging.*
*(3) To complete KEMET part number for non-DLA, insert A = N/A ,insert B = 0.1%/1,000 hours, C = 0.01%/1,000 hours, D=0.001%/1,000 hours. Designates Reliability Level.*
*(4) To complete KEMET part number for non-DLA, insert A = N/A, insert B = 0.1%/1,000 hours or C = 0.01%/1,000 hours. Designates Reliability Level.*
*(5) To complete KEMET part number, insert M for ±20% or K for ±10%. Designates capacitance tolerance.*
*(6) To complete KEMET part number insert, H = Solder Plated, T = 100% Tin (Sn). Designates termination finish.*
*(7) To complete KEMET part number, insert 85 = 4 cycles at 25°C ±5°C ** + improved humidity capability, 86 = 10 cycles at 25°C ±5°C*** + improved humidity capability, 87= 10 cycles at −55°C +0°C/−5°C and +85°C ±5°C*** + improved humidity capability. Designates surge current option on improved humidity capability.*

***Part Numbers marked in blue font are "Under Development." Engineering samples available upon request.***

## Table 1 – Ratings & Part Number Reference cont.

| Rated Voltage | Rated Cap | Case Code/ Case Size | KEMET Part Number | DLA Drawing Number 04051/04052 | Improved Humidity | DC Leakage | DF | ESR | Maximum Allowable Ripple Current | Maximum Operating Temp. |
|---|---|---|---|---|---|---|---|---|---|---|
| VDC at 105°C | µF | KEMET/EIA | (See below for part options) | Part Number | (85°C/85%) Capable | µA at 25°C Maximum | % at 25°C 120 Hz Maximum | mΩ at 25°C 100 kHz Maximum | (rms) mA at 45°C 100 kHz | °C |
| 16 | 47 | D/7343-31 | T540D476(5)016(3)(6)(1)10 | N/A | | 76 | 10 | 65 | 1,861 | 125 |
| 16 | 47 | D/7343-31 | T540D476(5)016(3)(6)(7)10 | N/A | • | 76 | 10 | 65 | 1,861 | 125 |
| 16 | 68 | D/7343-31 | T540D686M016AH(1)10 | 04051-035(2) | | 109 | 10 | 75 | 1,732 | 125 |
| 16 | 68 | D/7343-31 | T540D686(5)016(3)(6)(1)10 | N/A | | 109 | 10 | 75 | 1,732 | 125 |
| 16 | 68 | D/7343-31 | T540D686(5)016(3)(6)(7)10 | N/A | • | 109 | 10 | 75 | 1,732 | 125 |
| 16 | 100 | D/7343-31 | T540D107M016AH(1)10 | 04051-036(2) | | 160 | 10 | 50 | 2,121 | 125 |
| 16 | 100 | D/7343-31 | T540D107(5)016(3)(6)(1)10 | N/A | | 160 | 10 | 50 | 2,121 | 125 |
| 16 | 100 | D/7343-31 | T540D107(5)016(3)(6)(7)05 | N/A | • | 160 | 10 | 75 | 2,121 | 125 |
| 16 | 150 | X/7343-43 | T541X157M016AH(1)20 | 04052-052(2) | | 240 | 10 | 25 | 3,286 | 125 |
| 16 | 150 | X/7343-43 | T541X157(5)016(3)(6)(1)20 | N/A | | 240 | 10 | 25 | 3,286 | 125 |
| 16 | 150 | X/7343-43 | T541X157M016AH(1)10 | 04052-053(2) | | 240 | 10 | 40 | 2,598 | 125 |
| 16 | 150 | X/7343-43 | T541X157(5)016(3)(6)(7)10 | N/A | • | 240 | 10 | 40 | 2,598 | 125 |
| 16 | 220 | X/7343-43 | T541X227M016AH(1)20 | 04052-054(2) | | 352 | 10 | 25 | 3,286 | 125 |
| 16 | 220 | X/7343-43 | T541X227(5)016(3)(6)(1)20 | N/A | | 352 | 10 | 25 | 3,286 | 125 |
| 16 | 220 | X/7343-43 | T541X227M016AH(1)10 | 04052-055(2) | | 352 | 10 | 40 | 2,598 | 125 |
| 16 | 220 | X/7343-43 | T541X227(5)016(3)(6)(7)10 | N/A | • | 352 | 10 | 40 | 2,598 | 125 |
| 16 | 330 | X/7343-43 | T541X337M016AH(1)20 | 04052-056(2) | | 528 | 10 | 25 | 3,286 | 125 |
| 16 | 330 | X/7343-43 | T541X337(5)016(3)(6)(7)20 | N/A | • | 528 | 10 | 25 | 3,286 | 125 |
| 16 | 330 | X/7343-43 | T541X337M016AH(1)10 | 04052-057(2) | | 528 | 10 | 50 | 2,324 | 125 |
| 16 | 330 | X/7343-43 | T541X337(5)016(3)(6)(7)10 | N/A | • | 528 | 10 | 50 | 2,324 | 125 |
| 16 | 470 | O/7360-43 | T541O477M016(3)(6)(1)20 | N/A | | 752 | 10 | 20 | 3,870 | 125 |
| 16 | 470 | O/7360-43 | T541O477M016(3)(6)(1)10 | N/A | | 752 | 10 | 40 | 2,740 | 125 |
| 20 | 22 | D/7343-31 | T540D226M020AH(1)10 | 04051-037(2) | | 44 | 10 | 75 | 1,732 | 125 |
| 20 | 22 | D/7343-31 | T540D226(5)020(3)(6)(1)10 | N/A | | 44 | 10 | 75 | 1,732 | 125 |
| 20 | 22 | D/7343-31 | T540D226(5)020(3)(6)(7)05 | N/A | • | 44 | 10 | 100 | 1,500 | 125 |
| 20 | 33 | D/7343-31 | T540D336M020AH(1)10 | 04051-038(2) | | 66 | 10 | 75 | 1,732 | 125 |
| 20 | 33 | D/7343-31 | T540D336(5)020(3)(6)(1)10 | N/A | | 66 | 10 | 75 | 1,732 | 125 |
| 20 | 33 | D/7343-31 | T540D336(5)020(3)(6)(7)05 | N/A | • | 66 | 10 | 100 | 1,500 | 125 |
| 20 | 47 | D/7343-31 | T540D476M020AH(1)10 | 04051-039(2) | | 94 | 10 | 75 | 1,732 | 125 |
| 20 | 47 | D/7343-31 | T540D476(5)020(3)(6)(1)10 | N/A | | 94 | 10 | 75 | 1,732 | 125 |
| 20 | 47 | D/7343-31 | T540D476(5)020(3)(6)(7)05 | N/A | • | 94 | 10 | 100 | 1,500 | 125 |
| 20 | 100 | X/7343-43 | T541X107M020AH(1)10 | 04052-058(2) | | 200 | 10 | 50 | 2,324 | 125 |
| 20 | 100 | X/7343-43 | T541X107(5)020A(6)(7)20 | N/A | • | 200 | 10 | 30 | 2,870 | 125 |
| 20 | 100 | X/7343-43 | T541X107(5)020(3)(6)(7)10 | N/A | • | 200 | 10 | 50 | 2,324 | 125 |
| 25 | 6.8 | C/6032-28 | T540C685(5)025(3)(6)(1)10 | N/A | | 17 | 10 | 150 | 1,049 | 125 |
| 25 | 10 | C/6032-28 | T540C106(5)025(3)(6)(1)10 | N/A | | 25 | 10 | 150 | 1,049 | 125 |
| 25 | 15 | D/7343-31 | T540D156M025AH(1)20 | 04051-040(2) | | 38 | 10 | 75 | 1,732 | 125 |
| 25 | 15 | D/7343-31 | T540D156(5)025(3)(6)(1)20 | N/A | | 38 | 10 | 75 | 1,732 | 125 |
| 25 | 15 | D/7343-31 | T540D156M025AH(1)10 | 04051-041(2) | | 38 | 10 | 100 | 1,500 | 125 |
| 25 | 15 | D/7343-31 | T540D156(5)025(3)(6)(7)10 | N/A | • | 38 | 10 | 100 | 1,500 | 125 |
| 25 | 22 | D/7343-31 | T540D226M025AH(1)10 | 04051-042(2) | | 55 | 10 | 75 | 1,732 | 125 |
| 25 | 22 | D/7343-31 | T540D226(5)025(3)(6)(1)10 | N/A | | 55 | 10 | 75 | 1,732 | 125 |
| 25 | 22 | D/7343-31 | T540D226(5)025(3)(6)(7)05 | N/A | • | 55 | 10 | 100 | 1,500 | 125 |
| 25 | 33 | D/7343-31 | T540D336M025AH(1)10 | 04051-043(2) | | 83 | 10 | 75 | 1,732 | 125 |
| 25 | 33 | D/7343-31 | T540D336(5)025(3)(6)(1)10 | N/A | | 83 | 10 | 75 | 1,732 | 125 |
| 25 | 33 | D/7343-31 | T540D336(5)025(3)(6)(7)05 | N/A | • | 83 | 10 | 100 | 1,500 | 125 |
| 25 | 68 | X/7343-43 | T541X686M025AH(1)10 | 04052-059(2) | | 170 | 10 | 50 | 2,324 | 125 |
| 25 | 68 | X/7343-43 | T541X686(5)025(3)(6)(1)10 | N/A | | 170 | 10 | 50 | 2,324 | 125 |
| VDC at 105°C | µF | KEMET/EIA | (See below for part options) | Part Number | (85°C/85%) Capable | µA at 25°C Maximum | % at 25°C 120 Hz Maximum | mΩ at 25°C 100 kHz Maximum | (rms) mA at 45°C 100 kHz | °C |
| Rated Voltage | Rated Cap | Case Code/ Case Size | KEMET Part Number | DLA Drawing Number 04051/04052 | Improved Humidity | DC Leakage | DF | ESR | Maximum Allowable Ripple Current | Maximum Operating Temp. |

*(1) To complete KEMET part number, insert 65 = 4 cycles +25°C, 66 = 10 cycles +25°C, 67 = 10 cycles −55°C and +85°C, Designates surge current option.*
*(2) To complete DLA part number, insert Blank = None, A = 10 cycles +25°C ±5°C After Voltage Aging, B = 10 cycles −55°C and +85°C ±5°C After Voltage Aging.*
*(3) To complete KEMET part number for non-DLA, insert A = N/A ,insert B = 0.1%/1,000 hours, C = 0.01%/1,000 hours, D=0.001%/1,000 hours. Designates Reliability Level.*
*(4) To complete KEMET part number for non-DLA, insert A = N/A, insert B = 0.1%/1,000 hours or C = 0.01%/1,000 hours. Designates Reliability Level.*
*(5) To complete KEMET part number, insert M for ±20% or K for ±10%. Designates capacitance tolerance.*
*(6) To complete KEMET part number insert, H = Solder Plated, T = 100% Tin (Sn). Designates termination finish.*
*(7) To complete KEMET part number, insert 85 = 4 cycles at 25°C ±5°C ** + improved humidity capability, 86 = 10 cycles at 25°C ±5°C*** + improved humidity capability, 87= 10 cycles at −55°C +0°C/−5°C and +85°C ±5°C*** + improved humidity capability. Designates surge current option on improved humidity capability.*

***Part Numbers marked in blue font are "Under Development." Engineering samples available upon request.***

## Table 1 – Ratings & Part Number Reference cont.

| Rated Voltage | Rated Cap | Case Code/ Case Size | KEMET Part Number | DLA Drawing Number 04051/04052 | Improved Humidity | DC Leakage | DF | ESR | Maximum Allowable Ripple Current | Maximum Operating Temp. |
|---|---|---|---|---|---|---|---|---|---|---|
| VDC at 105°C | µF | KEMET/EIA | (See below for part options) | Part Number | (85°C/85%) Capable | µA at 25°C Maximum | % at 25°C 120 Hz Maximum | mΩ at 25°C 100 kHz Maximum | (rms) mA at 45°C 100 kHz | °C |
| 25 | 68 | X/7343-43 | T541X686(5)025(3)(6)(7)10 | N/A | • | 170 | 10 | 50 | 2,324 | 125 |
| 25 | 100 | X/7343-43 | T541X107M025AH(1)10 | 04052-060(2) | | 250 | 10 | 60 | 2,121 | 125 |
| 25 | 100 | X/7343-43 | T541X107(5)025(3)(6)(7)10 | N/A | • | 250 | 10 | 60 | 2,121 | 125 |
| 25 | 100 | X/7343-43 | T541X107(5)025(3)(6)(1)20 | N/A | • | 250 | 10 | 35 | 2,777 | 125 |
| 25 | 150 | O/7360-43 | T541O157M025(3)(6)(1)10 | N/A | | 375 | 10 | 45 | 2,580 | 125 |
| 30 | 22 | D/7343-31 | T540D226(5)030(3)(6)(1)10 | N/A | | 66 | 10 | 75 | 1,732 | 125 |
| 30 | 22 | D/7343-31 | T540D226(5)030(3)(6)(7)05 | N/A | • | 66 | 10 | 100 | 1,500 | 125 |
| 30 | 33 | D/7343-31 | T540D336(5)030(3)(6)(7)10 | N/A | • | 99 | 10 | 100 | 1,500 | 125 |
| 30 | 47 | X/7343-43 | T541X476(5)030(3)(6)(7)10 | N/A | • | 141 | 10 | 50 | 2,324 | 125 |
| 30 | 68 | X/7343-43 | T541X686(5)030(3)(6)(7)10 | N/A | • | 204 | 10 | 50 | 2,324 | 125 |
| 30 | 68 | X/7343-43 | T541X686(5)030(3)(6)(7)20 | N/A | • | 204 | 10 | 35 | 2,777 | 125 |
| 30 | 100 | X/7343-43 | T541X107(5)030(3)(6)(7)10 | N/A | • | 300 | 10 | 70 | 1,878 | 125 |
| 30 | 100 | X/7343-43 | T541X107(5)030(3)(6)(7)20 | N/A | • | 300 | 10 | 35 | 2,777 | 125 |
| 30 | 150 | O/7360-43 | T541O157M030(3)(6)(1)20 | N/A | | 450 | 10 | 30 | 3,160 | 125 |
| 30 | 150 | O/7360-43 | T541O157M030(3)(6)(1)10 | N/A | | 450 | 10 | 55 | 2,340 | 125 |
| 35 | 15 | D/7343-31 | T540D156M035AH(1)20 | 04051-044(2) | | 53 | 10 | 75 | 1,732 | 125 |
| 35 | 15 | D/7343-31 | T540D156(5)035(4)(6)(1)20 | N/A | | 53 | 10 | 75 | 1,732 | 125 |
| 35 | 15 | D/7343-31 | T540D156M035AH(1)10 | 04051-045(2) | | 53 | 10 | 100 | 1,500 | 125 |
| 35 | 15 | D/7343-31 | T540D156(5)035(4)(6)(7)10 | N/A | • | 53 | 10 | 100 | 1,500 | 125 |
| 35 | 33 | X/7343-43 | T541X336M035AH(1)10 | 04052-061(2) | | 116 | 10 | 60 | 2,121 | 125 |
| 35 | 33 | X/7343-43 | T541X336(5)035(4)(6)(7)10 | N/A | • | 116 | 10 | 60 | 2,121 | 125 |
| 35 | 47 | X/7343-43 | T541X476M035AH(1)10 | 04052-062(2) | | 165 | 10 | 60 | 2,121 | 125 |
| 35 | 47 | X/7343-43 | T541X476(5)035(4)(6)(7)10 | N/A | • | 165 | 10 | 60 | 2,121 | 125 |
| **35** | **68** | **O/7360-43** | **T541O686M035(4)(6)(1)10** | **N/A** | | **238** | **10** | **45** | **2,580** | **125** |
| 50 | 10 | D/7343-31 | T540D106M050AH(1)20 | 04051-046(2) | | 50 | 10 | 100 | 1,500 | 125 |
| 50 | 10 | D/7343-31 | T540D106(5)050(4)(6)(1)20 | N/A | | 50 | 10 | 100 | 1,500 | 125 |
| 50 | 10 | D/7343-31 | T540D106M050AH(1)10 | 04051-047(2) | | 50 | 10 | 125 | 1,342 | 125 |
| 50 | 10 | D/7343-31 | T540D106(5)050(4)(6)(7)10 | N/A | • | 50 | 10 | 125 | 1,342 | 125 |
| 50 | 22 | X/7343-43 | T541X226M050AH(1)10 | 04052-063(2) | | 110 | 10 | 75 | 1,897 | 125 |
| 50 | 22 | X/7343-43 | T541X226(5)050(4)(6)(1)10 | N/A | | 110 | 10 | 75 | 1,897 | 125 |
| 50 | 33 | X/7343-43 | T541X336M050AH(1)10 | 04052-064(2) | | 165 | 10 | 75 | 1,897 | 125 |
| 50 | 33 | X/7343-43 | T541X336(5)050(4)(6)(1)10 | N/A | | 165 | 10 | 75 | 1,897 | 125 |
| **50** | **47** | **O/7360-43** | **T541O476M050(4)(6)(1)10** | **N/A** | | **235** | **10** | **60** | **2,240** | **125** |
| 63 | 4.7 | D/7343-31 | T540D475M063AH(1)20 | 04051-048(2) | | 30 | 10 | 100 | 1,500 | 125 |
| 63 | 4.7 | D/7343-31 | T540D475(5)063(4)(6)(1)20 | N/A | | 30 | 10 | 100 | 1,500 | 125 |
| 63 | 4.7 | D/7343-31 | T540D475M063AH(1)10 | 04051-049(2) | | 30 | 10 | 120 | 1,369 | 125 |
| 63 | 4.7 | D/7343-31 | T540D475(5)063(4)(6)(7)10 | N/A | • | 30 | 10 | 120 | 1,369 | 125 |
| 63 | 10 | X/7343-43 | T541X106M063AH(1)10 | 04052-067(2) | | 63 | 10 | 150 | 1,342 | 125 |
| 63 | 10 | X/7343-43 | T541X106(5)063(4)(6)(1)10 | N/A | | 63 | 10 | 150 | 1,342 | 125 |
| 63 | 10 | X/7343-43 | T541X106M063AH(1)20 | 04052-066(2) | | 63 | 10 | 100 | 1,643 | 125 |
| 63 | 10 | X/7343-43 | T541X106(5)063(4)(6)(1)20 | N/A | | 63 | 10 | 100 | 1,643 | 125 |
| 63 | 10 | X/7343-43 | T541X106M063AH(1)30 | 04052-065(2) | | 63 | 10 | 75 | 1,897 | 125 |
| 63 | 10 | X/7343-43 | T541X106(5)063(4)(6)(1)30 | N/A | | 63 | 10 | 75 | 1,897 | 125 |
| 63 | 15 | X/7343-43 | T541X156M063AH(1)10 | 04052-068(2) | | 95 | 10 | 50 | 2,324 | 125 |
| 63 | 15 | X/7343-43 | T541X156(5)063(4)(6)(1)10 | N/A | | 95 | 10 | 50 | 2,324 | 125 |
| **63** | **22** | **O/7360-43** | **T541O226M063(4)(6)(1)10** | **N/A** | | **139** | **10** | **40** | **2,740** | **125** |
| VDC at 105°C | µF | KEMET/EIA | (See below for part options) | Part Number | (85°C/85%) Capable | µA at 25°C Maximum | % at 25°C 120 Hz Maximum | mΩ at 25°C 100 kHz Maximum | (rms) mA at 45°C 100 kHz | °C |
| Rated Voltage | Rated Cap | Case Code/ Case Size | KEMET Part Number | DLA Drawing Number 04051/04052 | Improved Humidity | DC Leakage | DF | ESR | Maximum Allowable Ripple Current | Maximum Operating Temp. |

*(1) To complete KEMET part number, insert 65 = 4 cycles +25°C, 66 = 10 cycles +25°C, 67 = 10 cycles −55°C and +85°C, Designates surge current option.*
*(2) To complete DLA part number, insert Blank = None, A = 10 cycles +25°C ±5°C After Voltage Aging, B = 10 cycles −55°C and +85°C ±5°C After Voltage Aging.*
*(3) To complete KEMET part number for non-DLA, insert A = N/A ,insert B = 0.1%/1,000 hours, C = 0.01%/1,000 hours, D=0.001%/1,000 hours. Designates Reliability Level.*
*(4) To complete KEMET part number for non-DLA, insert A = N/A, insert B = 0.1%/1,000 hours or C = 0.01%/1,000 hours. Designates Reliability Level.*
*(5) To complete KEMET part number, insert M for ±20% or K for ±10%. Designates capacitance tolerance.*
*(6) To complete KEMET part number insert, H = Solder Plated, T = 100% Tin (Sn). Designates termination finish.*
*(7) To complete KEMET part number, insert 85 = 4 cycles at 25°C ±5°C ** + improved humidity capability, 86 = 10 cycles at 25°C ±5°C*** + improved humidity capability, 87= 10 cycles at −55°C +0°C/−5°C and +85°C ±5°C*** + improved humidity capability. Designates surge current option on improved humidity capability.*

***Part Numbers marked in blue font are "Under Development." Engineering samples available upon request.***

## Derating Guidelines

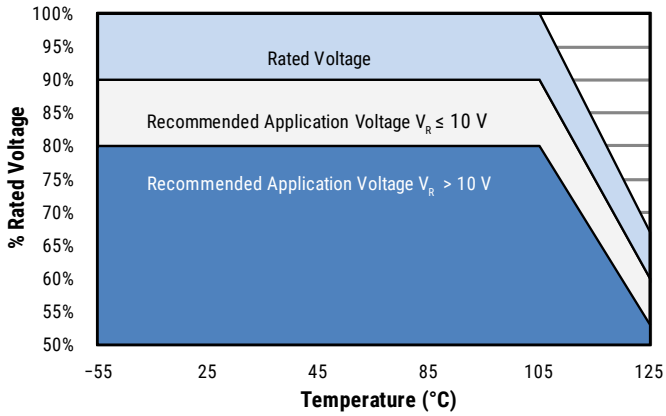


### Recommended Application Voltage

KO-CAPs are solid state capacitors that demonstrate no wearout mechanism when operated within their recommended guidelines. While the KO-CAP can be operated at full rated voltage, most circuit designers seek a minimum level of assurance in long term reliability, which should be demonstrated with data. A voltage derating can provide the desired level of demonstrated reliability based on industry accepted acceleration models. Since most applications do require long term reliability, KEMET recommends that designers consider a voltage derating, according the graphic above, for the maximum steady state voltage.

| Voltage Rating | Maximum Recommended Steady State Voltage | Maximum Recommended Steady State Voltage |
|---|---|---|
| | −55°C to 105°C | 105°C to 125°C |
| $2\ V \leq V_R \leq 10\ V$ | 90% of $V_R$ | 60% of $V_R$,See Chart |
| $12.5\ V \leq V_R \leq 63\ V$ | 80% of $V_R$ | 54% of $V_R$,See Chart |

*$V_R$ = Rated Voltage*

## Ripple Current/Ripple Voltage

Permissible AC ripple voltage and current are related to equivalent series resistance (ESR) and the power dissipation capabilities of the device. Permissible AC ripple voltage which may be applied is limited by two criteria:

a. The positive peak AC voltage plus the DC bias voltage, if any, must not exceed the DC voltage rating of the capacitor.

b. The negative peak AC voltage in combination with bias voltage, if any, must not exceed the allowable limits specified for reverse voltage.

The maximum power dissipation by case size can be determined using the table at right. The maximum power dissipation rating stated in the table must be reduced with increasing environmental operating temperatures. Refer to the table below for temperature compensation requirements.

| Case Code | EIA Case Code | Maximum Power Dissipation (Pmax) mWatts at 45°C with +30°C Rise |
|---|---|---|
| A | 3216-18 | 112 |
| B | 3528-20 | 127 |
| C | 6032-28 | 165 |
| D | 7343-31 | 255 |
| O | 7360-43 | 300 |
| X | 7443-43 | 270 |
| Y | 7343-40 | 263 |

| Temperature Compensation Multipliers for Maximum Ripple Current | | |
|---|---|---|
| T ≤ 45°C | 45° C < T ≤ 85°C | 85°C < T ≤ 125°C |
| 1.00 | 0.70 | 0.25 |

*T= Environmental Temperature*

Using the Pmax of the device, the maximum allowable rms ripple current or voltage may be determined.

$I(max) = \sqrt{Pmax/R}$

$E(max) = Z\sqrt{Pmax/R}$

*I = rms ripple current (amperes)*
*E = rms ripple voltage (volts)*
*Pmax = maximum power dissipation (watts)*
*R = ESR at specified frequency (ohms)*
*Z = Impedance at specified frequency (ohms)*

## Surge Voltage

Surge voltage is the maximum voltage (peak value) which may be applied to the capacitor.
The surge voltage must not be applied for periodic charging and discharging in the course of normal operation and cannot be part of the application voltage.
Surge voltage capability is demonstrated by application of 1,000cycles at relevant voltage at 105°C and 125°C.
The parts are charged through a 33 Ohm resistor for 30 seconds and then discharged though a 33 Ohm resistor for each cycle.

| Rated Voltage (V) | Surge Voltage (V) | Category Voltage (V) | Category Surge Voltage (V) |
|---|---|---|---|
| −55°C to 105°C | | up to 125°C | |
| 2.5 | 3.3 | 1.7 | 2.2 |
| 6.3 | 8.2 | 4.2 | 5.5 |
| 10 | 13.0 | 6.7 | 8.7 |
| 16 | 20.8 | 10.7 | 13.9 |
| 20 | 26.0 | 13.4 | 17.4 |
| 25 | 32.5 | 16.8 | 21.8 |
| 35 | 45.5 | 23.5 | 30.5 |
| 50 | 65.0 | 33.5 | 43.6 |

## Reverse Voltage

Polymer electrolytic capacitors are polar devices and may be permanently damaged or destroyed if connected in the wrong polarity. These devices will withstand a small degree of transient voltage reversal for short periods as shown in the below table.

| Temperature | Permissible Transient Reverse Voltage |
|---|---|
| 25°C | 15% of Rated Voltage |
| 55°C | 10% of Rated Voltage |
| 85°C | 5% of Rated Voltage |
| 105°C | 3% of Rated Voltage |
| 125°C* | 1% of Rated Voltage |

**For series rated to 125°C*

## Table 2 – Land Dimensions/Courtyard

| KEMET | Metric Size Code | Density Level A: Maximum (Most) Land Protrusion (mm) | | | | | Density Level B: Median (Nominal) Land Protrusion (mm) | | | | | Density Level C: Minimum (Least) Land Protrusion (mm) | | | | |
|---|---|---|---|---|---|---|---|---|---|---|---|---|---|---|---|---|
| Case | EIA | W | L | S | V1 | V2 | W | L | S | V1 | V2 | W | L | S | V1 | V2 |
| A | 3216–18 | 1.35 | 2.20 | 0.62 | 6.02 | 2.80 | 1.23 | 1.80 | 0.82 | 4.92 | 2.30 | 1.13 | 1.42 | 0.98 | 4.06 | 2.04 |
| B | 3528–21 | 2.35 | 2.21 | 0.92 | 6.32 | 4.00 | 2.23 | 1.80 | 1.12 | 5.22 | 3.50 | 2.13 | 1.42 | 1.28 | 4.36 | 3.24 |
| C | 6032–25 | 2.35 | 2.77 | 2.37 | 8.92 | 4.50 | 2.23 | 2.37 | 2.57 | 7.82 | 4.00 | 2.13 | 1.99 | 2.73 | 6.96 | 3.74 |
| D | 7343–31 | 2.55 | 2.77 | 3.67 | 10.22 | 5.60 | 2.43 | 2.37 | 3.87 | 9.12 | 5.10 | 2.33 | 1.99 | 4.03 | 8.26 | 4.84 |
| O | 7360-43 | 4.25 | 2.77 | 3.67 | 10.22 | 7.30 | 4.13 | 2.37 | 3.87 | 9.12 | 6.80 | 4.03 | 1.99 | 4.03 | 8.26 | 6.54 |
| X[1] | 7343–43 | 2.55 | 2.77 | 3.67 | 10.22 | 5.60 | 2.43 | 2.37 | 3.87 | 9.12 | 5.10 | 2.33 | 1.99 | 4.03 | 8.26 | 4.84 |
| Y[1] | 7343–40 | 2.55 | 2.77 | 3.67 | 10.22 | 5.60 | 2.43 | 2.37 | 3.87 | 9.12 | 5.10 | 2.33 | 1.99 | 4.03 | 8.26 | 4.84 |

***Density Level A:*** *For low-density product applications. Recommended for wave solder applications and provides a wider process window for reflow solder processes.*
***Density Level B:*** *For products with a moderate level of component density. Provides a robust solder attachment condition for reflow solder processes.*
***Density Level C:*** *For high component density product applications. Before adapting the minimum land pattern variations the user should perform qualification testing based on the conditions outlined in IPC standard 7351 (IPC–7351).*
*[1] Height of these chips may create problems in wave soldering.*
*[2] Land pattern geometry is too small for silkscreen outline.*

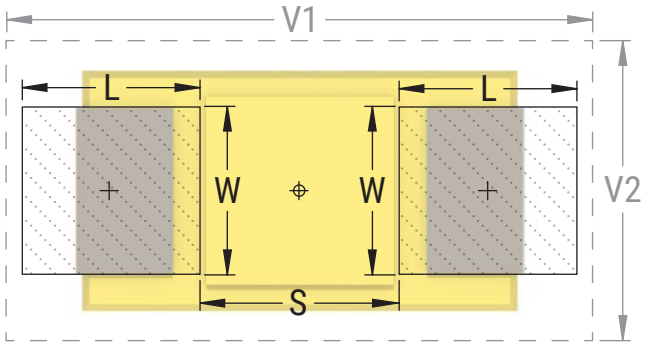

Grid Placement Courtyard

## Soldering Process

KEMET's families of surface mount capacitors are compatible with wave (single or dual), convection, IR, or vapor phase reflow techniques. Preheating of these components is recommended to avoid extreme thermal stress. KEMET's recommended profile conditions for convection and IR reflow reflect the profile conditions of the IPC/J–STD–020D standard for moisture sensitivity testing. The devices can safely withstand a maximum of three reflow passes at these conditions.

Please note that although the X/7343–43 case size can withstand wave soldering, the tall profile (4.3 mm maximum) dictates care in wave process development.

Hand soldering should be performed with care due to the difficulty in process control. If performed, care should be taken to avoid contact of the soldering iron to the molded case. The iron should be used to heat the solder pad, applying solder between the pad and the termination, until reflow occurs. Once reflow occurs, the iron should be removed immediately. "Wiping" the edges of a chip and heating the top surface is not recommended.

During typical reflow operations, a slight darkening of the gold-colored epoxy may be observed. This slight darkening is normal and not harmful to the product. Marking permanency is not affected by this change.

| Profile Feature | SnPb Assembly | Pb-Free Assembly |
|---|---|---|
| Preheat/Soak | | |
| Temperature Minimum ($T_{Smin}$) | 100°C | 150°C |
| Temperature Maximum ($T_{Smax}$) | 150°C | 200°C |
| Time ($t_s$) from $T_{smin}$ to $T_{smax}$) | 60 – 120 seconds | 60 – 120 seconds |
| Ramp-up Rate ($T_L$ to $T_P$) | 3°C/seconds maximum | 3°C/seconds maximum |
| Liquidous Temperature ($T_L$) | 183°C | 217°C |
| Time Above Liquidous ($t_L$) | 60 – 150 seconds | 60 – 150 seconds |
| Peak Temperature ($T_P$) | 220°C*<br>235°C** | 250°C*<br>260°C** |
| Time within 5°C of Maximum Peak Temperature ($t_p$) | 20 seconds maximum | 30 seconds maximum |
| Ramp-down Rate ($T_P$ to $T_L$) | 6°C/seconds maximum | 6°C/seconds maximum |
| Time 25°C to Peak Temperature | 6 minutes maximum | 8 minutes maximum |

*Note: All temperatures refer to the center of the package, measured on the package body surface that is facing up during assembly reflow.*
** For Case Size height > 2.5 mm*
*** For Case Size height ≤ 2.5 mm*

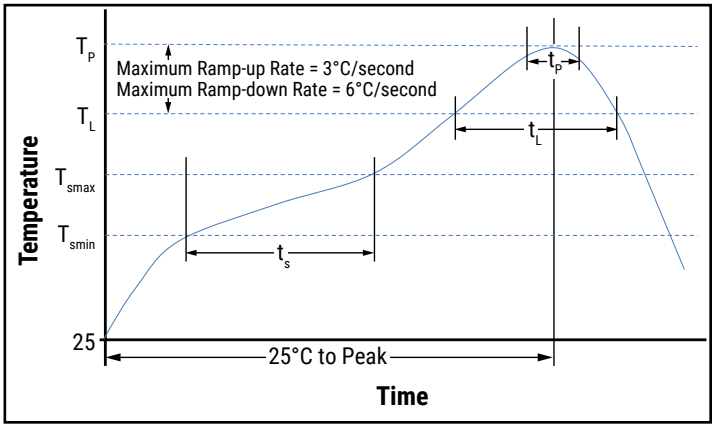


## Storage

All KO-Cap Series are shipped in moisture barrier bags (MBBs) with desiccant and humidity indicator card (HIC). These parts are classified as MSL3 (Moisture Sensitivity Level 3) per IPC/JEDEC J-STD-020 and packaged per IPC/JEDEC J-STD-033.
MSL3 specifies a floor time of 168H at 30°C maximum temperature and 60% relative humidity
Unused capacitors should be sealed in a MBB with fresh desiccant.
Calculated shelf life in sealed bag:
– 12 months from bag seal date in a storage environment of < 40°C and humidity < 90% RH
– 24 months from bag seal date in a storage environment of < 30°C and humidity < 70% RH
If baking is required, refer to IPC/JEDEC J-STD-033 for bake procedure

## Construction

### T540

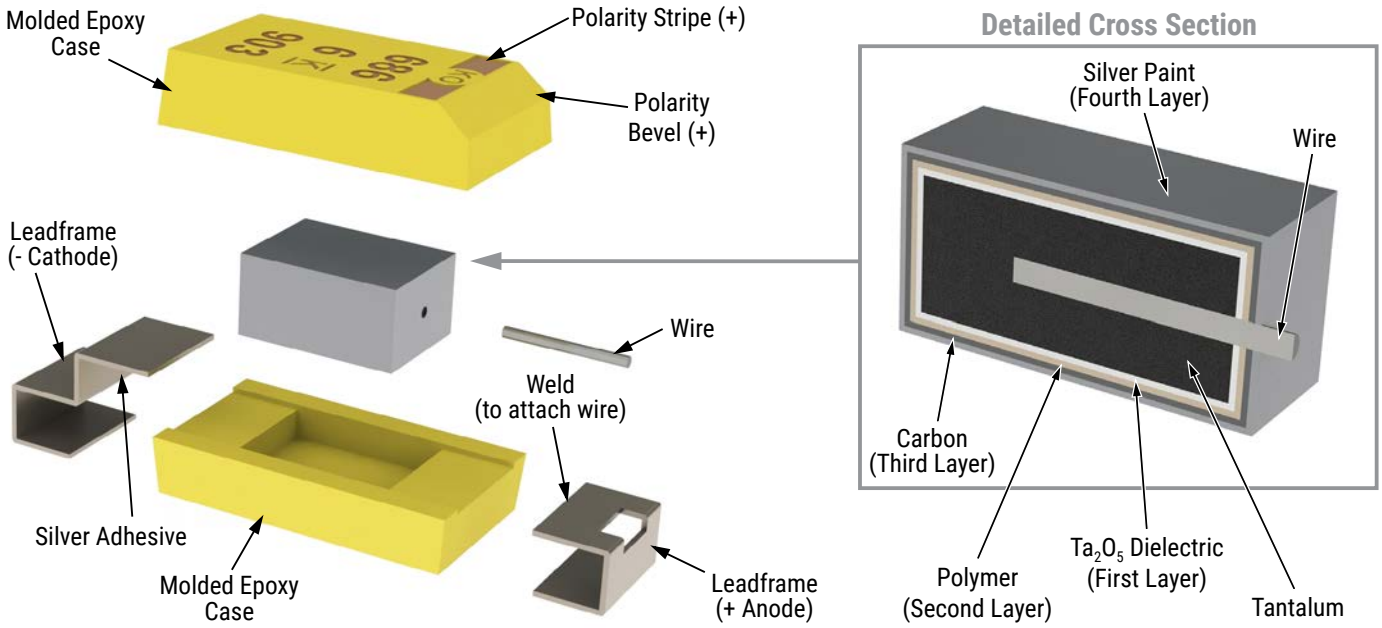


### T541 - Multiple Anodes Polymer

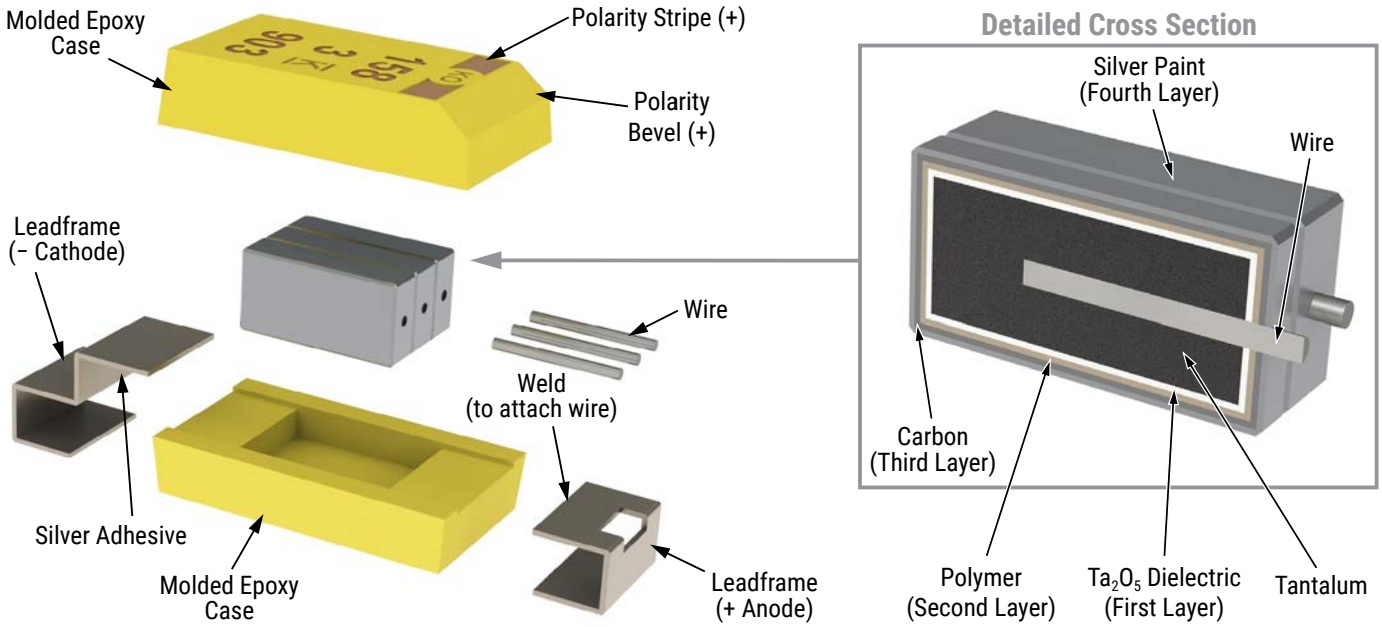

## Capacitor Marking

T540

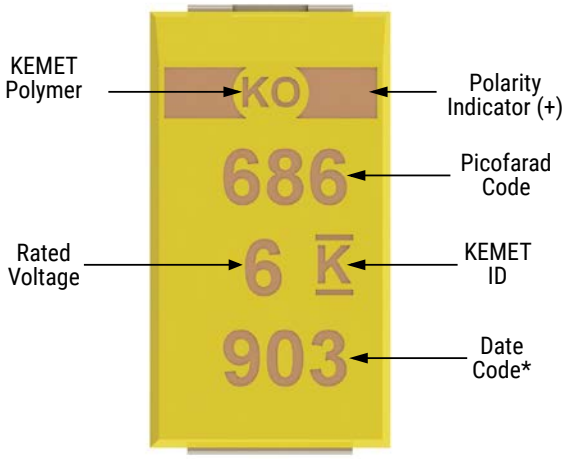


* 903 = 3rd week of 2019

T541

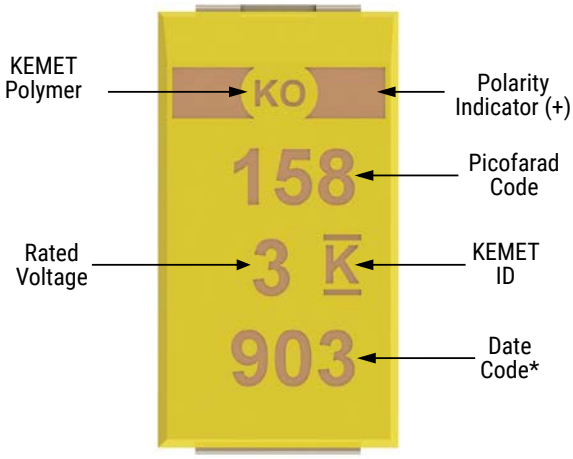


* 903 = 3rd week of 2019

*Note: On parts with selected surge codes (8X) the epoxy is black.*

| Date Code * | |
|---|---|
| 1st digit = Last number of Year | 4 = 2014<br>5 = 2015<br>6 = 2016<br>7 = 2017<br>8 = 2018<br>9 = 2019 |
| 2nd and 3rd digit = Week of the Year | 01 = 1st week of the Year to<br>52 = 52nd week of the Year |

## Tape & Reel Packaging Information

KEMET's molded chip capacitor families are packaged in 8 and 12 mm plastic tape on 7" and 13" reels in accordance with *EIA Standard 481*: Embossed Carrier Taping of Surface Mount Components for Automatic Handling. This packaging system is compatible with all tape-fed automatic pick-and-place systems.

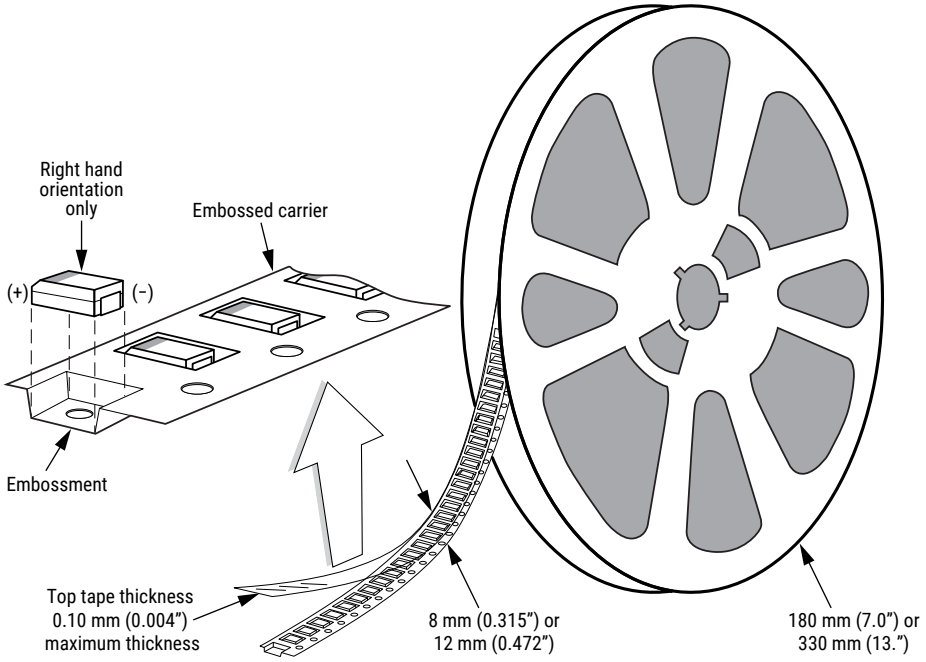


## Table 3 – Packaging Quantity

| Case Code | | Tape Width (mm) | 7" Reel* | 13" Reel* |
|---|---|---|---|---|
| KEMET | EIA | | | |
| P | 2012-10 | 8 | 3,000 | N/A |
| R | 2012-12 | 8 | 2,500 | 10,000 |
| I | 3216-10 | 8 | 3,000 | N/A |
| S | 3216-12 | 8 | 2,500 | 10,000 |
| A | 3216-18 | 8 | 2,000 | N/A |
| T | 3528-12 | 8 | 3,000 | 10,000 |
| M | 3528-15 | 8 | 2,500 | 8,000 |
| B | 3528-21 | 8 | 2,000 | 8,000 |
| U | 6032-15 | 12 | 1,000 | 5,000 |
| L | 6032-19 | 12 | 1,000 | 3,000 |
| C | 6032-28 | 12 | 500 | 3,000 |
| Q | 7343-12 | 12 | 1,000 | 3,000 |
| W | 7343-15 | 12 | 1,000 | 3,000 |
| Z | 7343-17 | 12 | 1,000 | 3,000 |
| V | 7343-19 | 12 | 1,000 | 3,000 |
| D | 7343-31 | 12 | 500 | 2,500 |
| Y | 7343-40 | 12 | 500 | 2,000 |
| X | 7343-43 | 12 | 500 | 2,000 |
| J | 7360-15 | 12 | 1,000 | 3,000 |
| H | 7360-20 | 12 | 1,000 | 3,000 |
| O | 7360-43 | 12 | 250 | 1,000 |

** No C-Spec required for 7" reel packaging. C-7280 required for 13" reel packaging.*

## Figure 1 – Embossed (Plastic) Carrier Tape Dimensions

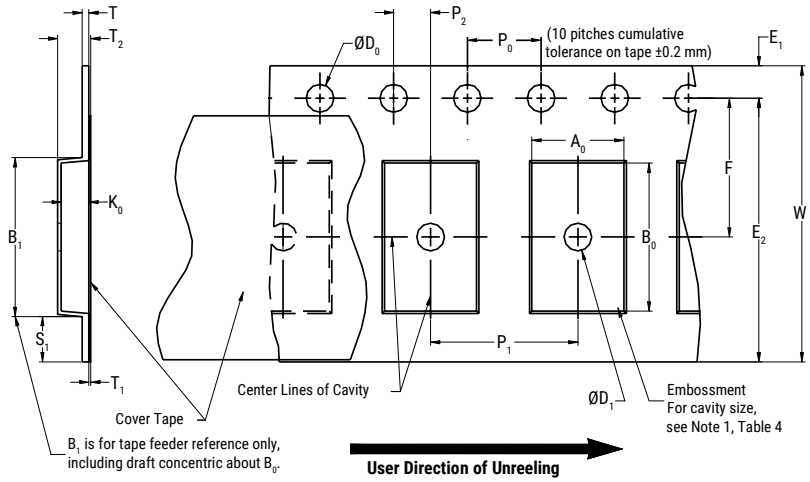


## Table 4 – Embossed (Plastic) Carrier Tape Dimensions

Metric will govern

| Constant Dimensions — Millimeters (Inches) | | | | | | | | | |
|---|---|---|---|---|---|---|---|---|---|
| Tape Size | $D_0$ | $D_1$ Minimum Note 1 | $E_1$ | $P_0$ | $P_2$ | R Reference Note 2 | $S_1$ Minimum Note 3 | T Maximum | $T_1$ Maximum |
| 8 mm | 1.5 +0.10/−0.0 (0.059 +0.004/−0.0) | 1.0 (0.039) | 1.75 ±0.10 (0.069 ±0.004) | 4.0 ±0.10 (0.157 ±0.004) | 2.0 ±0.05 (0.079 ±0.002) | 25.0 (0.984) | 0.600 (0.024) | 0.600 (0.024) | 0.100 (0.004) |
| 12 mm | | 1.5 (0.059) | | | | 30 (1.181) | | | |

| Variable Dimensions — Millimeters (Inches) | | | | | | | | |
|---|---|---|---|---|---|---|---|---|
| Tape Size | Pitch | $B_1$ Maximum Note 4 | $E_2$ Minimum | F | $P_1$ | $T_2$ Maximum | W Maximum | $A_0$, $B_0$ & $K_0$ |
| 8 mm | Single (4 mm) | 4.35 (0.171) | 6.25 (0.246) | 3.5 ±0.05 (0.138 ±0.002) | 2.0 ±0.05 or 4.0 ±0.10 (0.079 ±0.002 or 0.157 ±0.004) | 2.5 (0.098) | 8.3 (0.327) | Note 5 |
| 12 mm | Single (4 mm) and Double (8 mm) | 8.2 (0.323) | 10.25 (0.404) | 5.5 ±0.05 (0.217 ±0.002) | 2.0 ±0.05 (0.079 ±0.002) or 4.0 ±0.10 (0.157 ±0.004) or 8.0 ±0.10 (0.315 ±0.004) | 4.6 (0.181) | 12.3 (0.484) | |

1. *The embossment hole location shall be measured from the sprocket hole controlling the location of the embossment. Dimensions of embossment location and hole location shall be applied independent of each other.*
2. *The tape, with or without components, shall pass around R without damage (see Figure 4).*
3. *If $S_1$ < 1.0 mm, there may not be enough area for cover tape to be properly applied (see EIA Standard 481–D, paragraph 4.3, section b).*
4. *$B_1$ dimension is a reference dimension for tape feeder clearance only.*
5. *The cavity defined by $A_0$, $B_0$ and $K_0$ shall surround the component with sufficient clearance that:*
   *(a) the component does not protrude above the top surface of the carrier tape.*
   *(b) the component can be removed from the cavity in a vertical direction without mechanical restriction, after the top cover tape has been removed.*
   *(c) rotation of the component is limited to 20° maximum for 8 and 12 mm tapes (see Figure 2).*
   *(d) lateral movement of the component is restricted to 0.5 mm maximum for 8 mm and 12 mm wide tape (see Figure 3).*
   *(e) see Addendum in EIA Standard 481–D for standards relating to more precise taping requirements.*

## Packaging Information Performance Notes

**1. Cover tape break force:** 1.0 kg minimum.
**2. Cover tape peel strength:** The total peel strength of the cover tape from the carrier tape shall be:

| Tape Width | Peel Strength |
|---|---|
| 8 mm | 0.1 to 1.0 newton (10 to 100 gf) |
| 12 mm | 0.1 to 1.3 newton (10 to 130 gf) |

The direction of the pull shall be opposite the direction of the carrier tape travel. The pull angle of the carrier tape shall be 165° to 180° from the plane of the carrier tape. During peeling, the carrier and/or cover tape shall be pulled at a velocity of 300 ±10 mm/minute.
**3. Labeling:** Bar code labeling (standard or custom) shall be on the side of the reel opposite the sprocket holes. *Refer to EIA Standards 556 and 624*.

## Figure 2 – Maximum Component Rotation

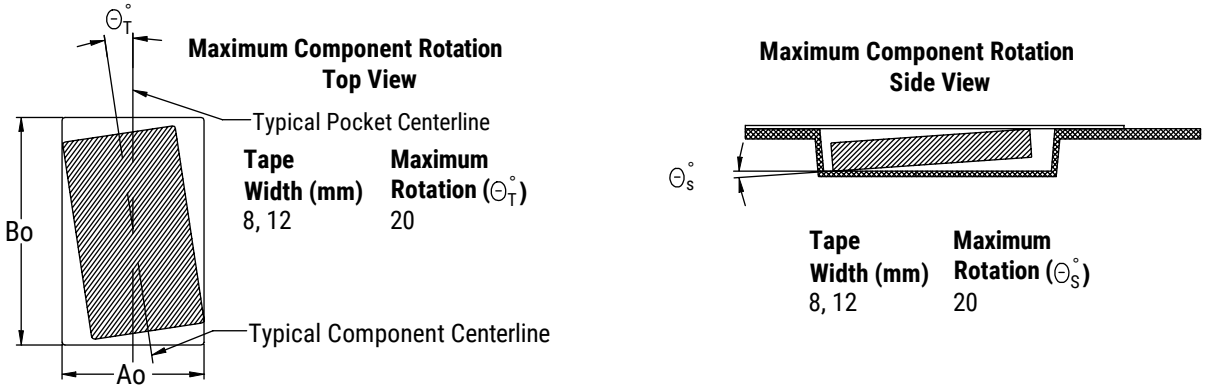


## Figure 3 – Maximum Lateral Movement

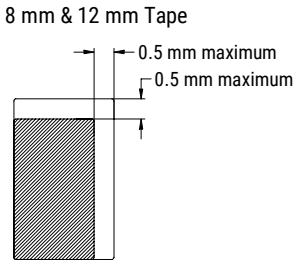


## Figure 4 – Bending Radius

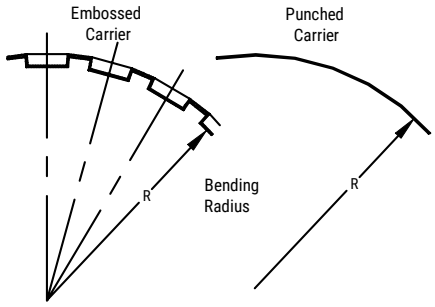

## Figure 5 – Reel Dimensions

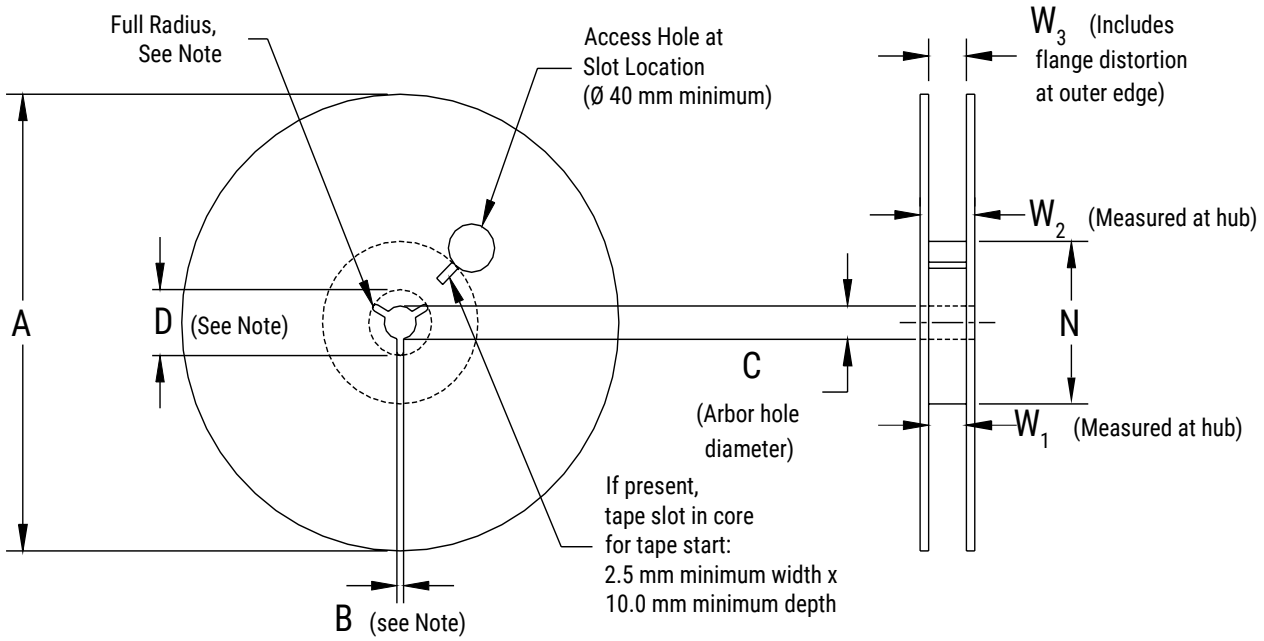


Note: Drive spokes optional; if used, dimensions B and D shall apply.

## Table 5 – Reel Dimensions

Metric will govern

| Constant Dimensions — Millimeters (Inches) | | | | |
|---|---|---|---|---|
| Tape Size | A | B Minimum | C | D Minimum |
| 8 mm | 178 ±0.20 (7.008 ±0.008) or 330 ±0.20 (13.000 ±0.008) | 1.5 (0.059) | 13.0 +0.5/−0.2 (0.521 +0.02/−0.008) | 20.2 (0.795) |
| 12 mm | | | | |

| Variable Dimensions — Millimeters (Inches) | | | | |
|---|---|---|---|---|
| Tape Size | N Minimum | $W_1$ | $W_2$ Maximum | $W_3$ |
| 8 mm | 50 (1.969) | 8.4 +1.5/−0.0 (0.331 +0.059/−0.0) | 14.4 (0.567) | Shall accommodate tape width without interference |
| 12 mm | | 12.4 +2.0/−0.0 (0.488 +0.078/−0.0) | 18.4 (0.724) | |

## Figure 6 – Tape Leader & Trailer Dimensions

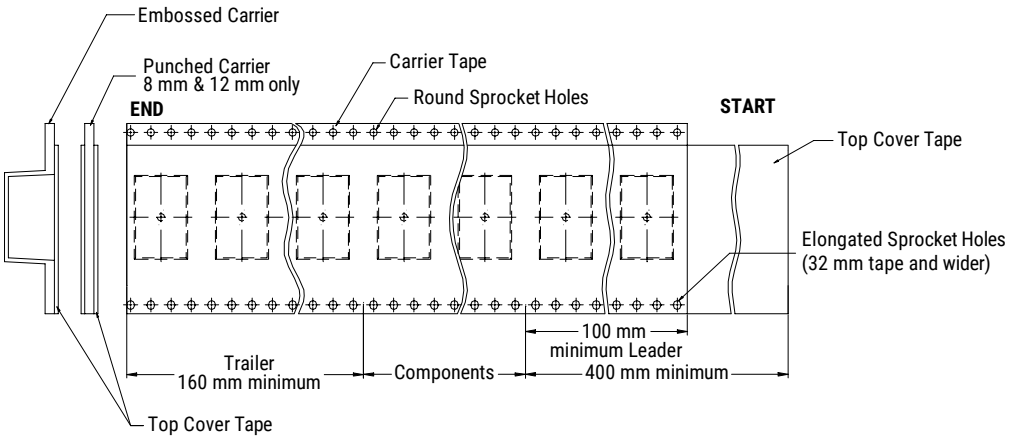


## Figure 7 – Maximum Camber

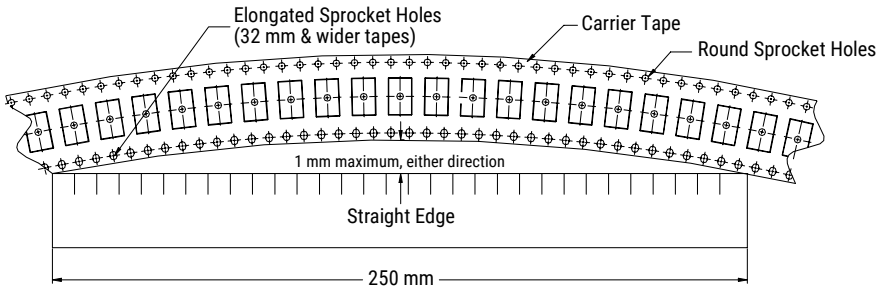

## KEMET Electronics Corporation Sales Offices

For a complete list of our global sales offices, please visit www.kemet.com/sales.

## Disclaimer

All product specifications, statements, information and data (collectively, the "Information") in this datasheet are subject to change. The customer is responsible for checking and verifying the extent to which the Information contained in this publication is applicable to an order at the time the order is placed. All Information given herein is believed to be accurate and reliable, but it is presented without guarantee, warranty, or responsibility of any kind, expressed or implied.

Statements of suitability for certain applications are based on KEMET Electronics Corporation's ("KEMET") knowledge of typical operating conditions for such applications, but are not intended to constitute – and KEMET specifically disclaims – any warranty concerning suitability for a specific customer application or use. The Information is intended for use only by customers who have the requisite experience and capability to determine the correct products for their application. Any technical advice inferred from this Information or otherwise provided by KEMET with reference to the use of KEMET's products is given gratis, and KEMET assumes no obligation or liability for the advice given or results obtained.

Although KEMET designs and manufactures its products to the most stringent quality and safety standards, given the current state of the art, isolated component failures may still occur. Accordingly, customer applications which require a high degree of reliability or safety should employ suitable designs or other safeguards (such as installation of protective circuitry or redundancies) in order to ensure that the failure of an electrical component does not result in a risk of personal injury or property damage.

Although all product–related warnings, cautions and notes must be observed, the customer should not assume that all safety measures are indicted or that other measures may not be required.

*KEMET is a registered trademark of KEMET Electronics Corporation.*

ООО «ЛайфЭлектроникс» “LifeElectronics” LLC

ИНН 7805602321 КПП 780501001 Р/С 40702810122510004610 ФАКБ "АБСОЛЮТ БАНК" (ЗАО) в г.Санкт-Петербурге К/С 30101810900000000703 БИК 044030703

*Компания «Life Electronics» занимается поставками электронных компонентов импортного и отечественного производства от производителей и со складов крупных дистрибьюторов Европы, Америки и Азии.*

*С конца 2013 года компания активно расширяет линейку поставок компонентов по направлению коаксиальный кабель, кварцевые генераторы и конденсаторы (керамические, пленочные, электролитические), за счёт заключения дистрибьюторских договоров*

*Мы предлагаем:*

- *Конкурентоспособные цены и скидки постоянным клиентам.*
- *Специальные условия для постоянных клиентов.*
- *Подбор аналогов.*
- *Поставку компонентов в любых объемах, удовлетворяющих вашим потребностям.*

- *Приемлемые сроки поставки, возможна ускоренная поставка.*
- *Доставку товара в любую точку России и стран СНГ.*
- *Комплексную поставку.*
- *Работу по проектам и поставку образцов.*
- *Формирование склада под заказчика.*

- *Сертификаты соответствия на поставляемую продукцию (по желанию клиента).*
- *Тестирование поставляемой продукции.*
- *Поставку компонентов, требующих военную и космическую приемку.*
- *Входной контроль качества.*
- *Наличие сертификата ISO.*

*В составе нашей компании организован Конструкторский отдел, призванный помогать разработчикам, и инженерам.*

*Конструкторский отдел помогает осуществить:*

- *Регистрацию проекта у производителя компонентов.*
- *Техническую поддержку проекта.*
- *Защиту от снятия компонента с производства.*
- *Оценку стоимости проекта по компонентам.*
- *Изготовление тестовой платы монтаж и пусконаладочные работы.*

*Тел: +7 (812) 336 43 04 (многоканальный)*
*Email: org@lifeelectronics.ru*

***www.lifeelectronics.ru***