## Description

Single pole thermal circuit breaker with press-to-reset, tease-free, trip-free, snap action mechanism. Type 2-5000 is available with optional manual release (-H), type 2-5700 can be supplied as a push-push switch/circuit breaker (R-type TO CBE to EN 60934 in press-to-reset configuration; M-type when fitted with manual release -H; S-type with push-push operation). Fitted with flange or threadneck for panel mounting. Options include an additional unprotected circuit tap (-A3). Approved to CBE standard EN 60934 (IEC 60934).

## Typical applications

Motors, transformers, solenoids, battery chargers, power supplies, appliances, machinery, extra low voltage systems.

2-5000-... 2-5700-...

## Ordering information

**Type No.**

**2-5000** flange mounting

**2-5700** threadneck panel mounting (hardware bulk shipped)

**Threadneck design – type 2-5700 only**

**iG1** moulded threadneck 3/8"-27UNS-2A

**iG2** moulded threadneck M12x1

**Terminal design**

**P10** blade terminals 6.3-0.8 mm (QC .250)

**K10** screw terminals M4x6

**Manual release (optional)**

**H** manual release facility (type 2-5000 only)

**DD** push to release/push to reset (type 2-5700 only)

**Current ratings**

**0.05...25 A**

**2-5700 - iG1 - P10 - DD - 8 A** ordering example

The exact part number required can be built up from the table of choices shown above. Ordering references for optional features should be omitted if not required.

## Preferred types

NEW

| Preferred types | Standard current ratings (A) | | | | | | | | | | | | |
|---|---|---|---|---|---|---|---|---|---|---|---|---|---|
| | 1 | 2 | 3 | 4 | 5 | 6 | 8 | 10 | 12 | 15 | 16 | 20 | 25 |
| 2-5700-IG1-P10- | x | x | x | x | x | x | x | x | x | x | x | x | x |
| 2-5700-IG1-P10-DD | | | x | x | x | x | x | x | x | x | x | x | x |
| 2-5700-IG2-P10- | | | x | x | x | x | x | x | x | x | x | x | x |
| 2-5700-IG2-P10-DD | | | x | x | x | x | x | x | x | x | x | x | x |

## Approvals

| Authority | Voltage ratings | Current ratings |
|---|---|---|
| VDE (EN 60934) | AC 250 V; DC 28 V | 0.05...25 A |
| CSA/ UL | AC 250 V; DC 50 V | 0.05...20 A |
| SEV | AC 250 V; DC 28 V | 0.05...25 A |
| CCC | AC 250 V; DC 28 V | 0.05...25 A |

## Technical data

**For further details please see chapter: Technical Information**

| | | |
|---|---|---|
| Voltage rating | AC 250 V; DC 28 V<br>(UL: AC 250 V; DC 50 V) | |
| Current rating range | 0.05...25 A | |
| Typical life | AC 250 V / DC 28 V:<br>0.05...16 A 5,000 operations at 2 x $I_N$, inductive<br>17...25 A 5,000 operations at 2 x $I_N$, resistive | |
| Ambient temperature | -20...+60 °C (-4...+140 °F) | |
| Insulation co-ordination (IEC 60664 and 60664 A) | rated impulse withstand voltage<br>2.5 kV<br>reinforced insulation in operating area | pollution degree<br>2 |
| Dielectric strength (IEC 60664 and 60664A) operating area | test voltage<br>AC 3,000 V | |
| Insulation resistance | > 100 MΩ (DC 500 V) | |
| Interrupting capacity $I_{cn}$ | 0.05...2.5 A<br>3...5 A<br>6...12 A<br><br><br>13...25 A | 8 x $I_N$<br>20 x $I_N$<br>200 A<br>(higher interrupting capacity available to special order)<br>300 A |
| Interrupting capacity (UL 1077) | $I_N$<br>0.05...20 A<br>0.05...25 A<br>(higher values upon request) | $U_N$<br>AC 250 V 2,000 A<br>DC 50 V 2,500 A |
| Degree of protection (IEC 60529/DIN 40050) | operating area IP40<br>terminal area IP00 | |
| Vibration | 8 g (57-500 Hz) ± 0.61 mm (10-57 Hz),<br>to IEC 60068-2-6, test Fc,<br>10 frequency cycles/axis | |
| Shock | 25 g (11 ms)<br>to IEC 60068-2-27, test Ea | |
| Corrosion | 96 hours at 5 % salt mist,<br>to IEC 60068-2-11, test Ka | |
| Humidity | 240 hours at 95 % RH<br>to IEC 60068-2-78, test Cab | |
| Mass | approx. 29 g | |

2

## Dimensions

### 2-5000-P10

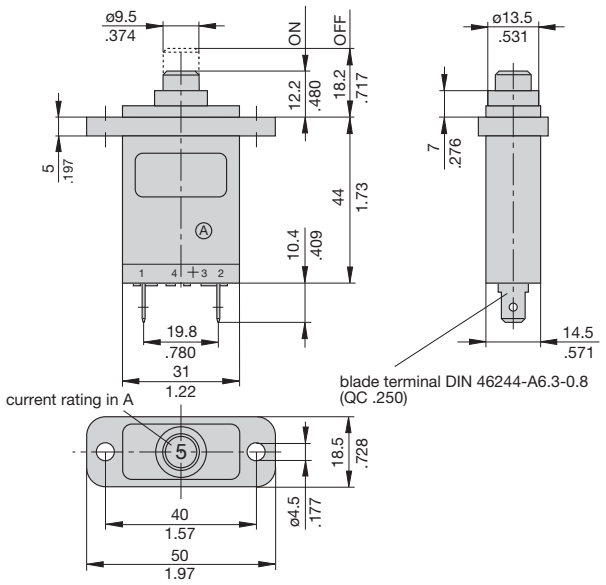


### 2-5700-P10

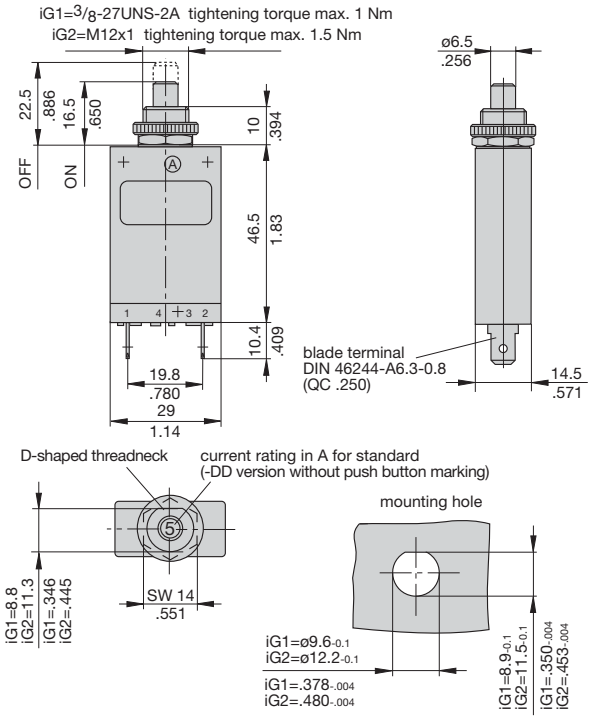


## Terminal design

### -K10

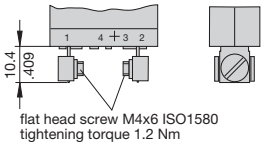


## Installation drawings

### 2-5000-P10

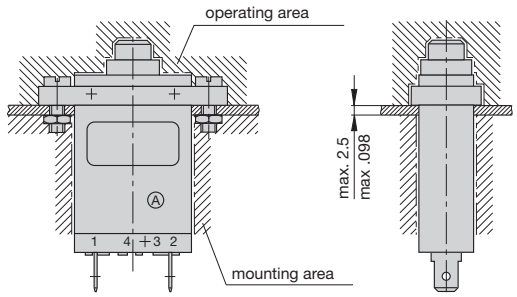


### 2-5700-P10

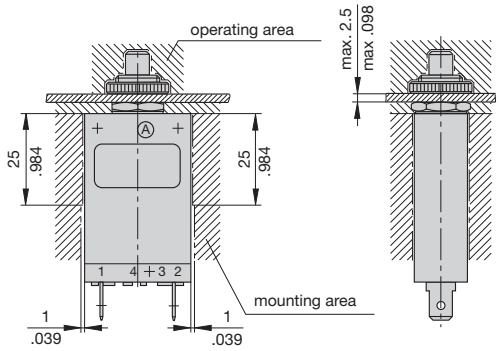


## Standard current ratings and typical internal resistance values

| Current rating (A) | Internal resistance (Ω) | Current rating (A) | Internal resistance (Ω) |
|---|---|---|---|
| 0.05 | 280 | 3 | 0.1 |
| 0.08 | 100 | 3.5 | 0.06 |
| 0.1 | 110 | 4 | 0.06 |
| 0.2 | 29 | 4.5 | 0.05 |
| 0.3 | 14 | 5 | 0.05 |
| 0.4 | 7 | 6 | 0.02 |
| 0.5 | 4.9 | 7 | 0.02 |
| 0.6 | 3.4 | 8 | 0.02 |
| 0.7 | 2.5 | 10 | < 0.02 |
| 0.8 | 1.8 | 12 | < 0.02 |
| 1 | 1.2 | 13 | < 0.02 |
| 1.2 | 0.8 | 15 | < 0.02 |
| 1.5 | 0.6 | 16 | < 0.02 |
| 1.8 | 0.4 | 20 | < 0.02 |
| 2 | 0.3 | 22 | < 0.02 |
| 2.5 | 0.2 | 25 | < 0.02 |

This is a metric design and millimeter dimensions take precedence ($\frac{mm}{inch}$)

## Typical time/current characteristics at +23 °C/+73.4 °F

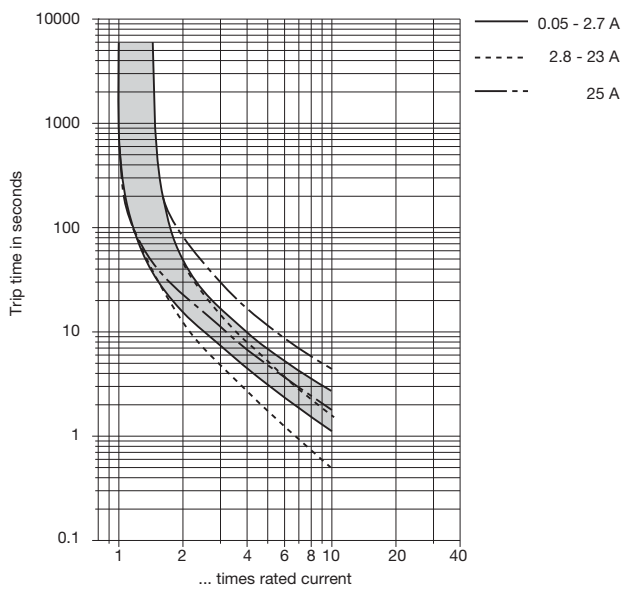


The time/current characteristic curve depends on the ambient temperature prevailing. In order to eliminate nuisance tripping, please multiply the circuit breaker current ratings by the derating factor shown below. See also section Technical information.

| Ambient temperature °F<br>°C | -4<br>-20 | +14<br>-10 | +32<br>0 | +73.4<br>+23 | +104<br>+40 | +122<br>+50 | +140<br>+60 |
|---|---|---|---|---|---|---|---|
| Derating factor | 0.76 | 0.84 | 0.92 | 1 | 1.08 | 1.16 | 1.24 |

## Internal connection diagrams

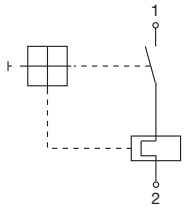


2

This is a metric design and millimeter dimensions take precedence ($\frac{mm}{inch}$)

## Accessories for types 2-5000 and 2-5700 with screw terminals -K10

**Bus bar**
**Y 303 563 01**

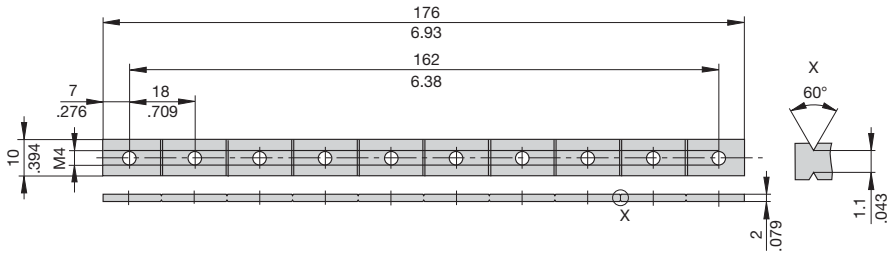


2

## Accessories for type 2-5000-...

**Water splash cover, transparent for push button** (IP64)
**Y 300 728 01**

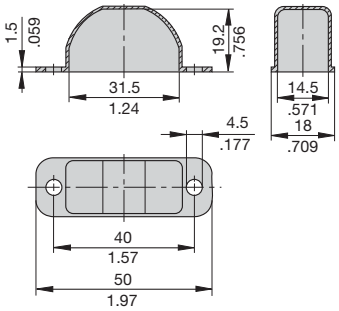


**Fixing plate**
**Y 301 056 02**

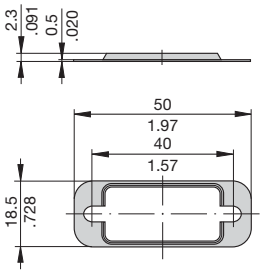


**Rear terminal shroud, transparent** (IP64)
**Y 300 476 01**

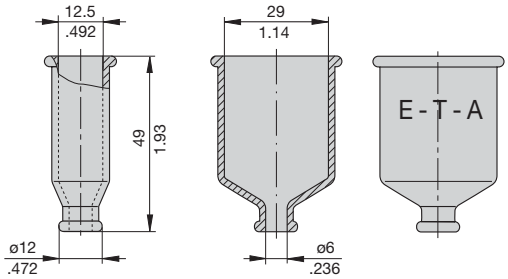


## Accessories for type 2-5700-...

**With 3/8" threadneck** (-iG1)

**Water splash cover, transparent Y 300 538 01 and knurled nut Y 300 628 01**
**X 200 799 01** (IP64)

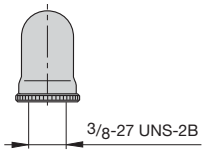


**Water splash cover, transparent with special knurled nut**
**X 200 798 02** (IP64)

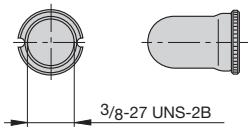


**Hex nut with splash cover black without O ring**
**X 210 739 01** (IP64)
**transparent splash cover**
**X 201 296 03** (IP64)

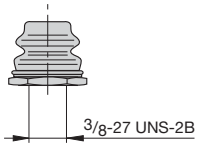


**Separate hardware**
**Hex nut**
**Y 300 192 01**

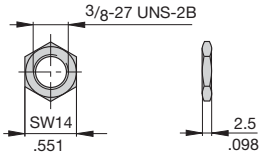


**Knurled nut**
**Y 307 117 02**

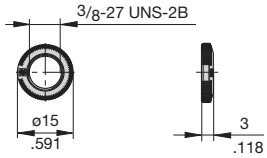


**With M12 threadneck** (-iG2)

**Hex nut with splash cover, black**
**X 201 296 01 without O ring** (IP64)
**X 200 801 03 with O ring**
(IP66 and IP67)
**Hex nut with splash cover, transparent**
**X 200 801 08 with O ring**
(IP66 and IP67)

**Water splash cover, transparent with knurled nut and O ring**
**X 210 663 01** (IP64)

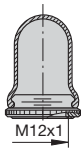


**Hex nut**
**Y 300 116 02**

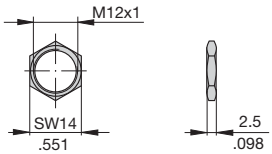


**Knurled nut**
**Y 302 065 01**

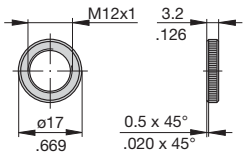


This is a metric design and millimeter dimensions take precedence (mm/inch)

All dimensions without tolerances are for reference only. In the interest of improved design, performance and cost effectiveness the right to make changes in these specifications without notice is reserved.Product markings may not be exactly as the ordering codes. Errors and omissions excepted.

ООО «ЛайфЭлектроникс» “LifeElectronics” LLC

ИНН 7805602321 КПП 780501001 Р/С 40702810122510004610 ФАКБ "АБСОЛЮТ БАНК" (ЗАО) в г.Санкт-Петербурге К/С 30101810900000000703 БИК 044030703

*Компания «Life Electronics» занимается поставками электронных компонентов импортного и отечественного производства от производителей и со складов крупных дистрибьюторов Европы, Америки и Азии.*

*С конца 2013 года компания активно расширяет линейку поставок компонентов по направлению коаксиальный кабель, кварцевые генераторы и конденсаторы (керамические, пленочные, электролитические), за счёт заключения дистрибьюторских договоров*

*Мы предлагаем:*

- *Конкурентоспособные цены и скидки постоянным клиентам.*
- *Специальные условия для постоянных клиентов.*
- *Подбор аналогов.*
- *Поставку компонентов в любых объемах, удовлетворяющих вашим потребностям.*

- *Приемлемые сроки поставки, возможна ускоренная поставка.*
- *Доставку товара в любую точку России и стран СНГ.*
- *Комплексную поставку.*
- *Работу по проектам и поставку образцов.*
- *Формирование склада под заказчика.*

- *Сертификаты соответствия на поставляемую продукцию (по желанию клиента).*
- *Тестирование поставляемой продукции.*
- *Поставку компонентов, требующих военную и космическую приемку.*
- *Входной контроль качества.*
- *Наличие сертификата ISO.*

*В составе нашей компании организован Конструкторский отдел, призванный помогать разработчикам, и инженерам.*

*Конструкторский отдел помогает осуществить:*

- *Регистрацию проекта у производителя компонентов.*
- *Техническую поддержку проекта.*
- *Защиту от снятия компонента с производства.*
- *Оценку стоимости проекта по компонентам.*
- *Изготовление тестовой платы монтаж и пусконаладочные работы.*

*Тел: +7 (812) 336 43 04 (многоканальный)*
*Email: org@lifeelectronics.ru*

***www.lifeelectronics.ru***