| DR45 SERIES

AC SINGLE PHASE OUTPUT DIN RAIL MOUNT SSRS

Introduction

The DR45 is a powerful and compact solid state relay in a DIN rail 45mm wide package with an output rating up to 60 Amps @ 40°C offering mounting flexibility (on panel or DIN rail) and convenient input connection options. Its high I^2t capability and optional built-in overvoltage protection make it suitable for demanding heating, motion and lighting applications.
Its contactor configuration and large cage clamp terminals allow connecting wires up to 3 AWG size on the output without the use of any additional accessories making them truly ready-to-use devices, therefore reducing installation cost and time.
UL Listed and VDE certified, the DR45 is a safe and versatile solid state relay with superior performance when compared to previous generation and competitor products in similar sized packages.

Features

- Output ratings up to 60 Amps at 600 VAC
- Built-in overvoltage protection
- Integral heat sink eliminates the need for complex thermal calculations
- Cage clamp terminal type accept up to 3 AWG wire size
- IP20 touch-safe housing
- Contactor configuration
- AC or DC control
- C-UL-US Listed and VDE approved

Applications

- Plastic injection molding equipment
- Packaging equipment
- Industrial ovens
- Lighting control
- Pump control
- Conveyor drives
- HVAC&R
- Railway vehicles

PRODUCT SELECTION

NOVA22

Control Voltage	45A	60A
90-280 VAC/VDC	DR4560A45x	DR4560A60x
4-32 VDC	DR4560D45x	DR4560D60x

Copyright © 2017 Sensata Technologies Inc.

ORDERING OPTIONS

DR45 – 60 – A – 45 – R – P – J

Series

DR45

Operating Voltage

60: 48-600 VAC

Control Voltage (1)

A: 90-280 VAC/VDC
D: 4-32 VDC

Rated Load Current

45: 45 Amps
60: 60 Amps

Switching Type

Blank: Zero Voltage Turn-On
R: Instantaneous Turn-On (Motor Rating Certified)

Overvoltage Protection

Blank: Not Included
P: Included

Input Connector

Blank: Screw Terminal
J: Spring Terminal

— Required for valid part number
☐ For options only and not required for valid part number

OUTPUT SPECIFICATIONS (2)

Description	45A	60A
Operating Voltage (45-65Hz) [V_{RMS}]	48-600	48-600
Transient Overvoltage [Vpk] (3)	1200	1200
Maximum Off-State Leakage Current @ Rated Voltage [mA_{RMS}]	1	1
Minimum Off-State dV/dt @ Maximum Rated Voltage [V/µsec]	500	500
Load Current, General Use UL508/LC A IEC62314 @ 40°C [A_{RMS}]	45	60
Load Current, Motor Starting UL508 FLA/LC B IEC62314 @ 40°C [A_{RMS}]	14/7.6	26/14
Minimum Load Current [mA_{RMS}]	100	150
Maximum 1 Cycle Surge Current (50/60Hz) [Apk]	716/750	1290/1350
Maximum On-State Voltage Drop @ Rated Current [V_{RMS}]	1.25	1.15
Maximum 1/2 Cycle I^2t for Fusing (50/60Hz) [A^2 sec]	2563/2343	8320/7593
Maximum Power Dissipation @ Rated Current [W]	52	69
Minimum Power Factor (at Maximum Load) (4)	0.5	0.5
Motor Rating UL 508/IEC62314 [HP (kW)]: 120 VAC	1 (0.74)	2 (1.5)
Motor Rating UL 508/IEC62314 [HP (kW)]: 240 VAC	3 (2.2)	5 (3.73)
Motor Rating UL 508/IEC62314 [HP (kW)]: 480 VAC	5 (3.7)	10 (7.4)

INPUT SPECIFICATIONS (2)

Description	DR4560Dxxx	DR4560Axxx
Control Voltage Range	4-32 VDC (5)	90-280 VAC/VDC
Maximum Reverse Voltage	-32 VDC	-
Minimum Turn-On Voltage	4 VDC	90 VAC/VDC
Must Turn-Off Voltage	1 VDC	5 VAC/VDC
Minimum Input Current (for on-state)	10 mA	3 mA
Maximum Input Current	15 mA	4 mA
Nominal Input Impedance	Current Limited	Switch Mode
Maximum Turn-On Time [msec]	1/2 Cycle (6)	20
Maximum Turn-Off Time [msec]	1/2 Cycle	30

Copyright © 2017 Sensata Technologies Inc.

GENERAL SPECIFICATIONS (2)

Description	Parameters
Dielectric Strength, Input to Output (50/60Hz)	4000 V_{RMS}
Dielectric Strength, Input/Output to Case (50/60Hz)	4000 V_{RMS}
Minimum Insulation Resistance (@ 500 VDC)	10^9 Ohms
Maximum Capacitance, Input/Output	8 pF
Ambient Operating Temperature Range	-40 to 80 °C
Ambient Storage Temperature Range (7)	-40 to 100 °C
Short Circuit Current Rating (8)	100kA
Weight (typical)	17.63 oz (500 g)
Housing Material	UL94 V-0
Heat Sink Material	Aluminum
DIN Rail Clip Material	Zinc Plated Steel
Hardware Finish	Nickel Plating
Input Terminal Screw Torque Range (lb-in/Nm)	5/0.5
Load Terminal Screw Torque Range (lb-in/Nm)	18-20/2-2.2
Humidity per IEC 60068-2-78	93% non-condensing
LED Input Status Indicator	Green
Overvoltage Category	III
Impulse Withstand Voltage According to IEC 60664-1	6kV

INPUT CURRENT INFORMATION

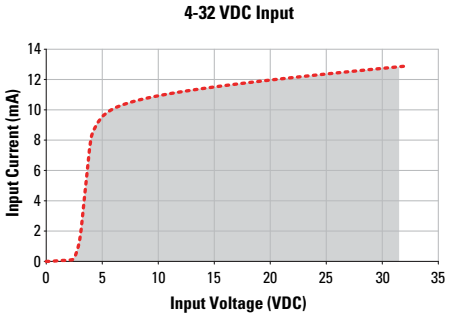

SURGE CURRENT INFORMATION

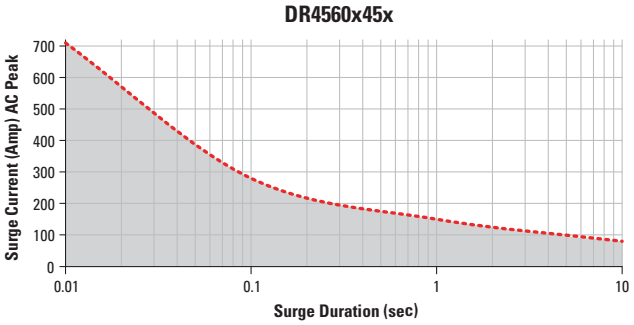

Single Pulse (9)

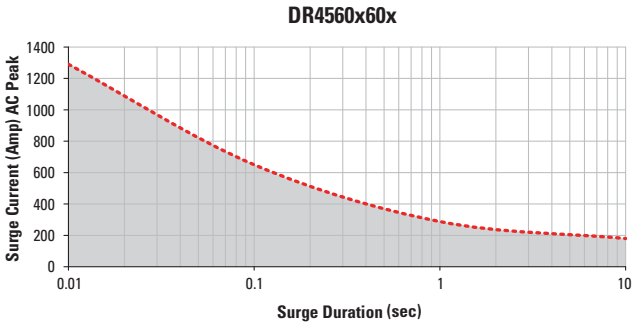

THERMAL DERATE INFORMATION (10)

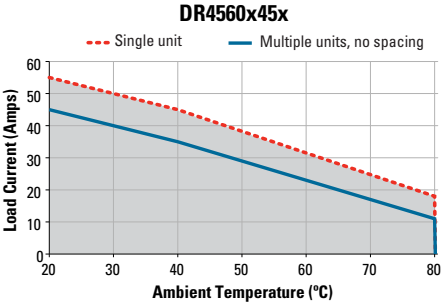

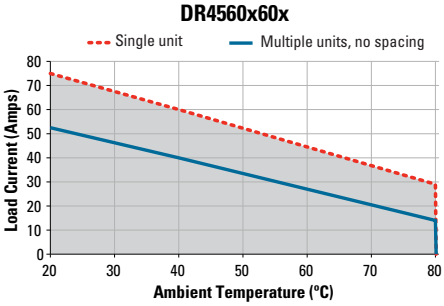

Copyright © 2017 Sensata Technologies Inc.

EQUIVALENT CIRCUIT BLOCK DIAGRAMS/WIRING DIAGRAMS

DC Control * TVS option available in "P" version

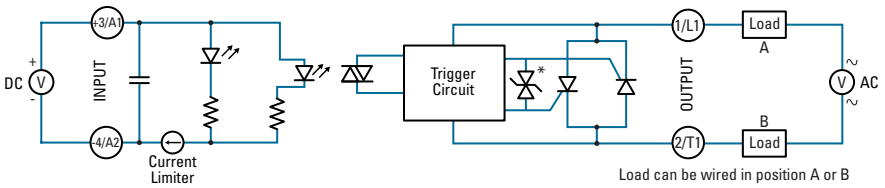

AC/DC Control * TVS option available in "P" version

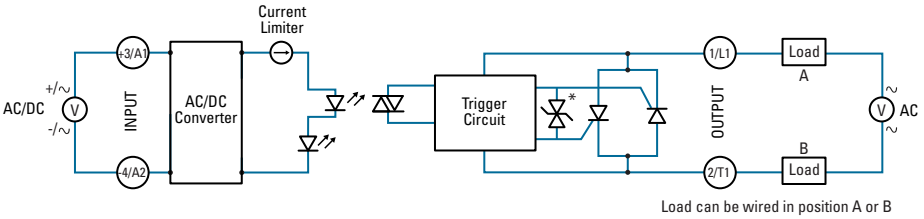

INSTALLATION INSTRUCTIONS

Mounting on DIN Rail

- Locate rail and align with non moveable end of DR45 DIN clip.
- Using reasonable force, push DR45 in the direction of the arrow (as shown in **fig.1**).
- For removal pull release tag in direction of arrow using blade of screwdriver and pull it away from DIN rail.

Mounting on Panel

- Locate the panel section on which the DR45 SSR will be mounted on (as shown in **fig.2**)
- DIN clip includes tabs for this type of mounting. Tab holes have a diameter of 4.5 mm. You will need three screws (not included) no larger than that to mount the SSR onto panel.
- Align SSR tabs with panel surface and screw both top and bottom sides. Recommended torque is 12 in-lbs (1.36 Nm).

Wiring Instructions

- Recommended wire sizes as shown in TABLE 1
- Maximum terminal screw torque input terminal 5 lb-in (0.5 Nm) (screw terminal only)
- Maximum terminal screw torque load terminal 18-20 lb-in (2.0-2.2 Nm)
- If multiple units are installed be sure to follow derating curves

TABLE 1. Wire Size & Pull Out Strenght

Terminal Configuration		Recommended Wire Size (Solid / Stranded)	Wire Pull-Out Strength (lb)[N]*
Output		1 x 18 AWG (1 mm²) [minimum]	20 [88]
		1 x 8 AWG (10 mm²) [maximum]	90 [400]
		2 x 8 AWG (10 mm²) [maximum]	80 [355]
		1 x 3 AWG (26.67 mm²) [maximum]	90 [400]
Input	Screw	30 AWG (0.05 mm²) [minimum]	4.5 [20]
		12 AWG (3.3 mm²) [maximum]	30 [133]
	Spring	26 AWG (0.13 mm²) [minimum]	5 [22]
		12 AWG (3.3 mm²) [maximum]	5 [22]

* Tests performed on Stranded wire

WARNING! Removing product from 35 mm rail incorrectly by not using the appropriate tool would damage the latching system.

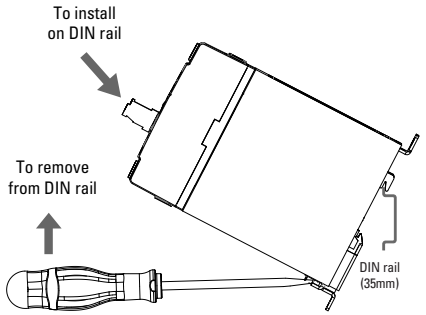

fig. 1 SSR mounted on DIN rail

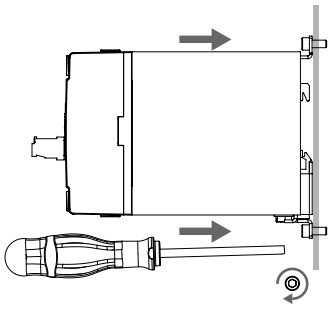

fig. 2 SSR mounted on Panel Mount

Copyright © 2017 Sensata Technologies Inc.

MECHANICAL SPECIFICATIONS

Tolerances: ±0.02 in / 0.5 mm
All dimensions are in: inches [millimeters]

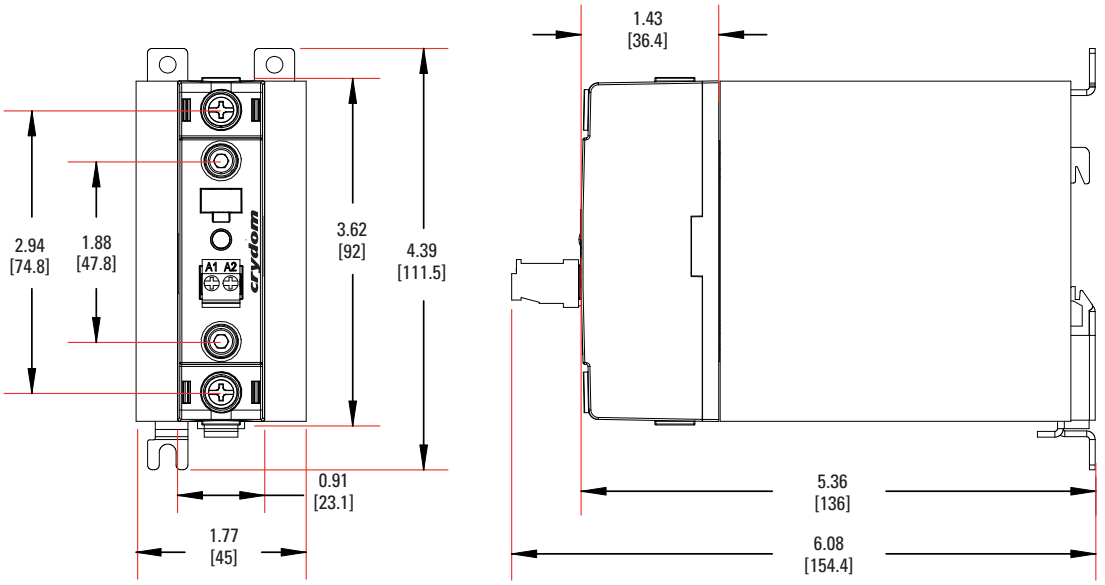

ACCESSORIES

Recommended Accessories	
Connectors	**ID Marker**
CP201 Screw Terminal CP202 Spring Terminal	CNLB Blank Strips CNLN Numbered 1 to 10 Strips CNL2 Numbered 11 to 20 Strips

Protective Earth Connection	
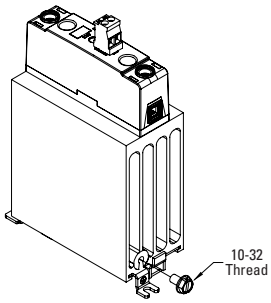	Protective earth (PE) screw type recommended is 10-32 UNC standard not provided with SSR. Through the use of a DIN rail ground (protective conductor) terminal block, the DIN rail itself can be used as the grounding bus bar. In this case, the zinc plated steel material used for the DIN rail clip of DR45 models, permits a secure path to ground and avoid the need of a further PE connection.

Copyright © 2017 Sensata Technologies Inc.

AGENCY APPROVALS, CONFORMANCES, ENVIRONMENTAL AND EMC

Approvals (Tested and Certified according To)	
c UL us LISTED E116949	VDE REG-Nr. xxxxxx
UL 508 and C22.2 No. 14	EN 62314

Conformances				Environmental	
Vibration and Shock Resistance	Designed in accordance with	Resistances to heat and fire	CE	RoHS	50
IEC 61373: Category 1, Class B	IEC 60950-1	IEC 60335-1, Section 30	Directive 2006/95/EC	Directive 2011/65/EU	GBT 26572-2011

Electromagnetic Compatibility				
Generic Standard	Immunity Tests	Test Specification Level		Performance
emc IEC 61000-6-2 Immunity for Industrial Environments	Electrostatic Discharge IEC 61000-4-2	8kV air discharge		Criterion A
		6kV contact discharge		Criterion A
	Fast transients (burst) IEC 61000-4-4	Output	2kV, 5kHz, 100kHz	Criterion B
		Input	1kV, 5kHz, 100kHz	Criterion B
	Surge IEC 61000-4-5	Output	1kV Line to Line	Criterion B
			2kV Line to Earth	Criterion B
		AC Input Option	1kV Line to Line	Criterion A
			2kV Line to Earth	Criterion A

GENERAL NOTES

(1) Control voltage 18-52 VAC/VDC is available upon request.
(2) All parameters at 25°C unless otherwise specified.
(3) "P" option output will self trigger between 900-1200 Vpk, not suitable for capacitive loads.
(4) High inductive loads requires nominal control voltage; AC input models only.
(5) Increase minimum voltage by 1 V for operations from -20 to -40°C.
(6) Turn-on time for Instantaneous turn-on versions is 0.1 msec.
(7) No freezing or condensation allowed.
(8) When protected with the appropriate class and rated fuse. For detailed info please contact Crydom Technical Support.
(9) For single surge pulse Tc=25°C; Tj=125°C. For AC Output SSRs, AC RMS value of surge current equals the peak value divided by √2 (1.414).
(10) UL approved rating is the one that intersects at 40°C.

Sensata Technologies, Inc. ("Sensata") data sheets are solely intended to assist designers ("Buyers") who are developing systems that incorporate Sensata products (also referred to herein as "components"). Buyer understands and agrees that Buyer remains responsible for using its independent analysis, evaluation and judgment in designing Buyer's systems and products. Sensata data sheets have been created using standard laboratory conditions and engineering practices. Sensata has not conducted any testing other than that specifically described in the published documentation for a particular data sheet. Sensata may make corrections, enhancements, improvements and other changes to its data sheets or components without notice.
Buyers are authorized to use Sensata data sheets with the Sensata component(s) identified in each particular data sheet. HOWEVER, NO OTHER LICENSE, EXPRESS OR IMPLIED, BY ESTOPPEL OR OTHERWISE TO ANY OTHER SENSATA INTELLECTUAL PROPERTY RIGHT, AND NO LICENSE TO ANY THIRD PARTY TECHNOLOGY OR INTELLECTUAL PROPERTY RIGHT, IS GRANTED HEREIN. SENSATA DATA SHEETS ARE PROVIDED "AS IS". SENSATA MAKES NO WARRANTIES OR REPRESENTATIONS WITH REGARD TO THE DATA SHEETS OR USE OF THE DATA SHEETS, EXPRESS, IMPLIED OR STATUTORY, INCLUDING ACCURACY OR COMPLETENESS. SENSATA DISCLAIMS ANY WARRANTY OF TITLE AND ANY IMPLIED WARRANTIES OF MERCHANTABILITY, FITNESS FOR A PARTICULAR PURPOSE, QUIET ENJOYMENT, QUIET POSSESSION, AND NON-INFRINGEMENT OF ANY THIRD PARTY INTELLECTUAL PROPERTY RIGHTS WITH REGARD TO SENSATA DATA SHEETS OR USE THEREOF.
All products are sold subject to Sensata's terms and conditions of sale supplied at www.sensata.com SENSATA ASSUMES NO LIABILITY FOR APPLICATIONS ASSISTANCE OR THE DESIGN OF BUYERS' PRODUCTS. BUYER ACKNOWLEDGES AND AGREES THAT IT IS SOLELY RESPONSIBLE FOR COMPLIANCE WITH ALL LEGAL, REGULATORY AND SAFETY-RELATED REQUIREMENTS CONCERNING ITS PRODUCTS, AND ANY USE OF SENSATA COMPONENTS IN ITS APPLICATIONS, NOTWITHSTANDING ANY APPLICATIONS-RELATED INFORMATION OR SUPPORT THAT MAY BE PROVIDED BY SENSATA.
Mailing Address: Sensata Technologies, Inc., 529 Pleasant Street, Attleboro, MA 02703, USA.

CONTACT US
Americas
+1 (877) 502 5500 – Option 2
sales.crydom@sensata.com
Europe, Middle East & Africa
+44 (1202) 416170
ssr-info.eu@sensata.com
Asia Pacific
sales.isasia@list.sensata.com
China +86 (21) 2306 1500
Japan +81 (45) 277 7117
Korea +82 (31) 601 2004
India +91 (80) 67920890
Rest of Asia +886 (2) 27602006 ext 2808

Copyright © 2017 Sensata Technologies Inc.

Rev. 011618 ECN 20312 FDE-07-01 Rev. B

ООО «ЛайфЭлектроникс» “LifeElectronics” LLC

ИНН 7805602321 КПП 780501001 Р/С 40702810122510004610 ФАКБ "АБСОЛЮТ БАНК" (ЗАО) в г.Санкт-Петербурге К/С 30101810900000000703 БИК 044030703

Компания «Life Electronics» занимается поставками электронных компонентов импортного и отечественного производства от производителей и со складов крупных дистрибьюторов Европы, Америки и Азии.

С конца 2013 года компания активно расширяет линейку поставок компонентов по направлению коаксиальный кабель, кварцевые генераторы и конденсаторы (керамические, пленочные, электролитические), за счёт заключения дистрибьюторских договоров

Мы предлагаем:

- *Конкурентоспособные цены и скидки постоянным клиентам.*
- *Специальные условия для постоянных клиентов.*
- *Подбор аналогов.*
- *Поставку компонентов в любых объемах, удовлетворяющих вашим потребностям.*

- *Приемлемые сроки поставки, возможна ускоренная поставка.*
- *Доставку товара в любую точку России и стран СНГ.*
- *Комплексную поставку.*
- *Работу по проектам и поставку образцов.*
- *Формирование склада под заказчика.*

- *Сертификаты соответствия на поставляемую продукцию (по желанию клиента).*
- *Тестирование поставляемой продукции.*
- *Поставку компонентов, требующих военную и космическую приемку.*
- *Входной контроль качества.*
- *Наличие сертификата ISO.*

В составе нашей компании организован Конструкторский отдел, призванный помогать разработчикам, и инженерам.

Конструкторский отдел помогает осуществить:

- *Регистрацию проекта у производителя компонентов.*
- *Техническую поддержку проекта.*
- *Защиту от снятия компонента с производства.*
- *Оценку стоимости проекта по компонентам.*
- *Изготовление тестовой платы монтаж и пусконаладочные работы.*

Тел: +7 (812) 336 43 04 (многоканальный)
Email: org@lifeelectronics.ru

www.lifeelectronics.ru