XC6120 Series

ETR0209-011

Highly Accurate, Ultra Small, Low Power Consumption Voltage Detector

■GENERAL DESCRIPTION

The XC6120 series are highly precise, low power consumption voltage detectors, manufactured using CMOS and laser trimming technologies. With low power consumption and high accuracy, the series is suitable for precision mobile equipment. The XC6120 in ultra small packages are ideally suited for high-density mounting. The XC6120 is available in both CMOS and N-channel open drain output configurations.

■APPLICATIONS

- ●Microprocessor reset circuitry
- ●Memory battery back-up circuits
- ●Power-on reset circuits
- ●Power failure detection
- ●System battery life and charge voltage monitors

■FEATURES

Highly Accurate :± 2% (V_{DF}≧1.5V)
: ± 30mV (V_{DF}<1.5V)
Low Power Consumption: 0.6μA [V_{DF}=2.7V, V_{IN}=2.97V]
Detect Voltage Range : 1.0V ~ 5.0V (0.1V increments)
Operating Voltage Range: 0.7V ~ 6.0V
Detect Voltage Temperature Characteristics
:±100ppm/℃ (TYP.)
Output Configuration : CMOS (XC6120C)
: N-channel open drain (XC6120N)
Operating Temperature Range : -40℃~+85℃
Packages : USP-3, SSOT-24, SOT-25
Environmentally Friendly : EU RoHS Compliant, Pb Free

■TYPICAL APPLICATION CIRCUIT

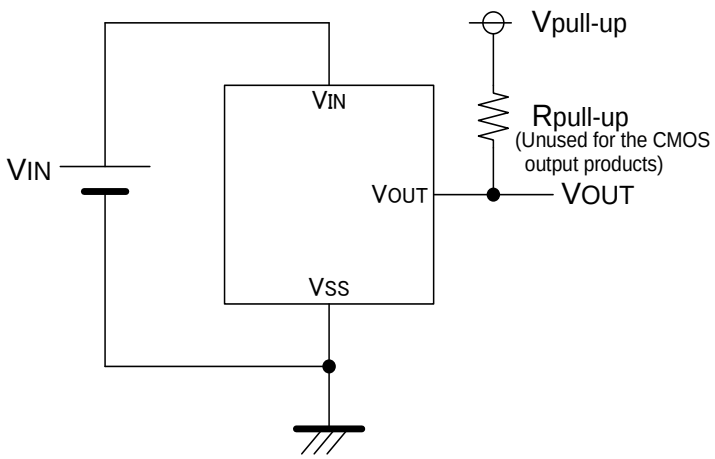

■ TYPICAL PERFORMANCE CHARACTERISTICS

●Supply Current vs. Input Voltage

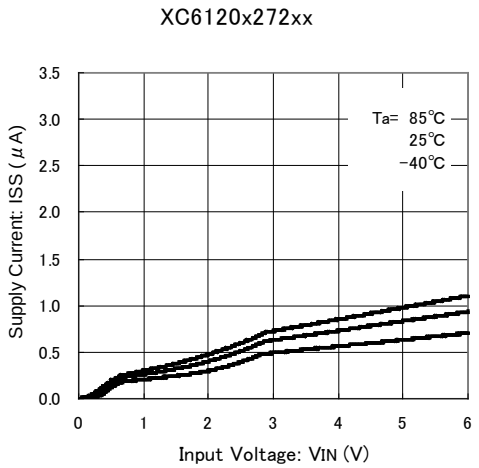

■BLOCK DIAGRAMS

(1) XC6120C

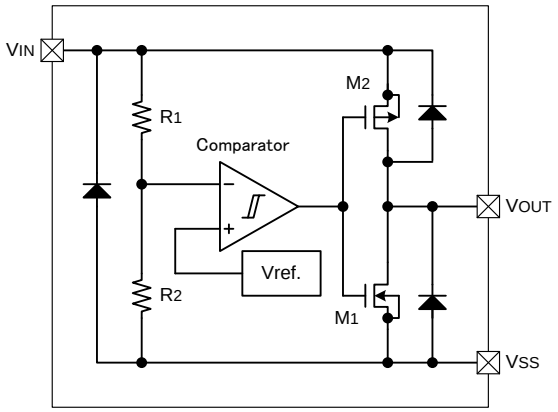

* Diodes inside the circuits are ESD protection diodes and parasitic diodes.

(2) XC6120N

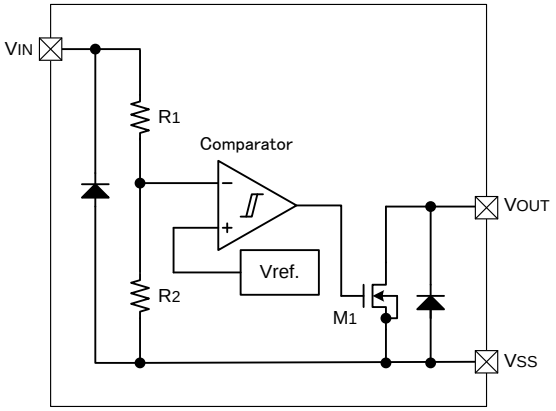

* Diodes inside the circuits are ESD protection diodes and parasitic diodes.

■PRODUCT CLASSIFICATION

1) Ordering Information

XC6120①②③④⑤⑥-⑦(*1)

DESIGNATOR	ITEM	SYMBOL	DESCRIPTION
①	Output Configuration	C	CMOS output
		N	N-ch open drain output
②③	Detect Voltage (V_{DF})	10~50	For example 1.0V → ②1, ③0
④	Detect Accuracy	2	±2%(1.5V≦VDF≦5.0V) ±30mV(1.0V≦VDF≦1.5V)
⑤⑥-⑦(*1)	Packages (Order Unit)	HR	USP-3 (3,000pcs/Reel)
		HR-G	USP-3 (3,000pcs/Reel)
		NR	SSOT-24 (3,000pcs/Reel)
		NR-G	SSOT-24 (3,000pcs/Reel)
		SR-G	SOT-25 (3,000pcs/Reel) Standard feed(*2)
		SL-G	SOT-25 (3,000pcs/Reel) Reverse feed(*2)

(*1) The "-G" suffix indicates that the products are Halogen and Antimony free as well as being fully EU RoHS compliant.
(*2) SOT-25 uses Cu wires.

2) Taping Specifications

・SR-G

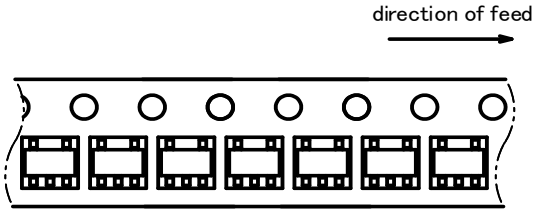

・SL-G

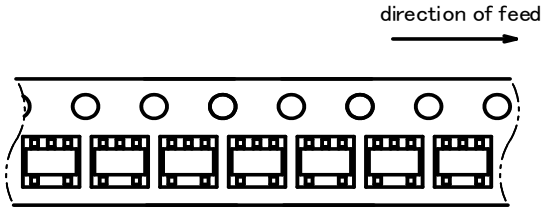

■PIN CONFIGURATION

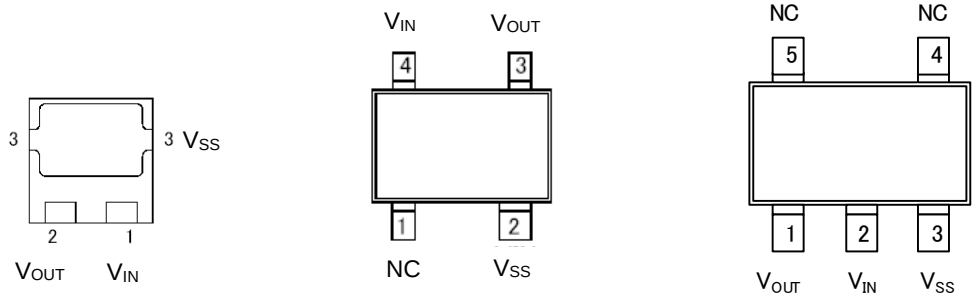

USP-3
(BOTTOM VIEW)

SSOT-24
(TOP VIEW)

SOT-25
(TOP VIEW)

■PIN ASSIGNMENT

PIN NUMBER			PIN NAME	FUNCTION
USP-3	SSOT-24	SOT-25		
1	4	2	V_{IN}	Power Input
3	2	3	V_{SS}	Ground
2	3	1	V_{OUT}	Output (Detect "Low")
-	1	4,5	NC	No Connection

■ABSOLUTE MAXIMUM RATINGS

Ta=25℃

PARAMETER		SYMBOL	RATING	UNITS
Input Voltage		V_{IN}	V_{SS}-0.3~7.0	V
Output Current		I_{OUT}	10	mA
Output Voltage	CMOS Output	V_{OUT}	V_{SS}-0.3~V_{IN}+0.3	V
	N-ch Open Drain Output		V_{SS}-0.3~7.0	
Power Dissipation	USP-3	Pd	120	mW
			1000 (40mm x 40mm Standard board)(*1)	
	SSOT-24		150	
			500 (40mm x 40mm Standard board)(*1)	
	SOT-25		250	
			600 (40mm x 40mm Standard board)(*1)	
Operating Temperature Range		Topr	-40~+85	℃
Storage Temperature Range		Tstg	-55~+125	℃

(*1) The power dissipation figure shown is PCB mounted and is for reference only.
The mounting condition is please refer to PACKAGING INFORMATION.

■ELECTRICAL CHARACTERISTICS

XC6120 Series

Ta=25℃

PARAMETER	SYMBOL	CONDITION		MIN.	TYP.	MAX.	UNITS	CIRCUIT
Operating Voltage	V_{IN}	$V_{DF(T)}$=1.0～5.0V (*1)		0.7	-	6.0	V	-
Detect Voltage	V_{DF}	$V_{DF(T)}$=1.0V～5.0V		E-1			V	①
Hysteresis Width	V_{HYS}	$V_{DF(T)}$=1.0V～5.0V		V_{DF} × 0.03	V_{DF} × 0.05	V_{DF} × 0.07	V	①
Supply Current 1	I_{SS1}	$V_{IN}=V_{DF(T)}\times 1.1$		E-2			μA	②
Supply Current 2	I_{SS2}	$V_{IN}= V_{DF(T)}\times 0.9$		E-3			μA	②
Output Current	I_{OUTN}	V_{IN}=0.7V	V_{OUT}=0.5V	0.09	0.57	-	mA	③
			V_{OUT}=0.3V	0.08	0.56	-		
			V_{OUT}=0.1V	0.05	0.30	-		
		V_{IN}=1.0V	V_{OUT}=0.1V, $V_{DF(T)}$＞1.0V	0.46	0.71	-		
		V_{IN}=2.0V	V_{OUT}=0.1V, $V_{DF(T)}$＞2.0V	1.15	1.41	-		
		V_{IN}=3.0V	V_{OUT}=0.1V, $V_{DF(T)}$＞3.0V	1.44	1.77	-		
		V_{IN}=4.0V	V_{OUT}=0.1V, $V_{DF(T)}$＞4.0V	1.61	1.96	-		
	I_{OUTP} (*2)	V_{IN}=6.0V	V_{OUT}=5.5V	-	-0.95	-0.60	mA	③
Leakage Current (CMOS Output(Pch))	I_{LEAK}	$V_{IN}=V_{DF}\times 0.9$, V_{OUT}=0V		-	-0.001	-	μA	③
Leakage Current (N-ch Open Drain)		V_{IN}=6.0V, V_{OUT}=6.0V		-	0.001	0.10		
Temperature Characteristics	$\Delta V_{DF}/(\Delta Topr \cdot V_{DF})$	-40 ºC≦Topr≦85 ºC		-	±100	-	ppm/ºC	①
Detect Delay Time (*3)	t_{DF}	V_{IN}=6.0V→0.7V $V_{IN}=V_{DF}$ to V_{OUT}=0.5V		-	30	100	μs	④
Release Delay Time (*5)	t_{DR}	V_{IN}=0.7V→6.0V $V_{IN}=V_{DR}$ to $V_{OUT}=V_{DR}$ (*4)		-	20	100	μs	④

(*1): $V_{DF\ (T)}$: Nominal detect voltage
(*2): For XC6120C only.
(*3): A time taking from the time at $V_{IN} = V_{DF}$ to the time at V_{OUT}=0.5V when V_{IN} falls from 6.0V to 0.7V.
(*4): V_{DR}: Release voltage ($V_{DR} = V_{DF} + V_{HYS}$)
(*5): A time taking from the time at $V_{IN} = V_{DR}$ to the time at $V_{OUT} = V_{DR}$ when V_{IN} rise from 0.7V to 6.0V.

●XC6120N recommended pull-up resistance

Input Voltage Range	Pull-up Resistance
0.7V~6.0V	≧ 220kΩ
0.8V~6.0V	≧ 100kΩ
1.0V~6.0V	≧ 33kΩ

■ELECTRICAL CHARACTERISTICS (Continued)

● DETECT VOLTAGE ACCURACY AND SUPPLY CURRENT SPECIFICATIONS

SYMBOL	E-1		E-2		E-3	
PARAMETER / NOMINAL DETECT VOLTAGE	DETECT VOLTAGE V_{DF} (V) XC6120xxx2 Series		SUPPLY CURRENT 1 I_{SS1} (μA)		SUPPLY CURRENT 2 I_{SS2} (μA)	
$V_{DF(T)}$	MIN.	MAX.	TYP.	MAX.	TYP.	MAX.
1.0	0.970	1.030	0.5	1.4	0.4	1.35
1.1	1.070	1.130				
1.2	1.170	1.230				
1.3	1.270	1.330				
1.4	1.370	1.430				
1.5	1.470	1.530				
1.6	1.568	1.632				
1.7	1.666	1.734				
1.8	1.764	1.836				
1.9	1.862	1.938				
2.0	1.960	2.040	0.6	1.7	0.5	1.60
2.1	2.058	2.142				
2.2	2.156	2.244				
2.3	2.254	2.346				
2.4	2.352	2.448				
2.5	2.450	2.550				
2.6	2.548	2.652				
2.7	2.646	2.754				
2.8	2.744	2.856	0.7	1.9	0.6	1.80
2.9	2.842	2.958				
3.0	2.940	3.060				
3.1	3.038	3.162				
3.2	3.136	3.264				
3.3	3.234	3.366				
3.4	3.332	3.468				
3.5	3.430	3.570				
3.6	3.528	3.672				
3.7	3.626	3.774				
3.8	3.724	3.876				
3.9	3.822	3.978				
4.0	3.920	4.080				
4.1	4.018	4.182				
4.2	4.116	4.284				
4.3	4.214	4.386				
4.4	4.312	4.488				
4.5	4.410	4.590				
4.6	4.508	4.692				
4.7	4.606	4.794				
4.8	4.704	4.896				
4.9	4.802	4.998				
5.0	4.900	5.100				

(*6)When detect voltage is 1.0V≦$V_{DF(T)}$<1.5V, detect accuracy is ±30mV.
When detect voltage is 1.5V≦$V_{DF(T)}$≦5.0V, detect accuracy is ±2%.

■TEST CIRCUITS

Circuit ①

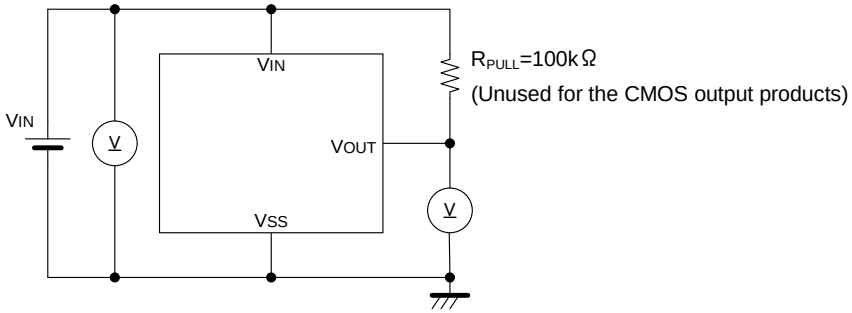

Circuit ②

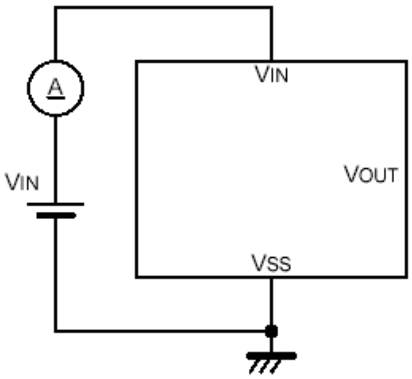

Circuit ③

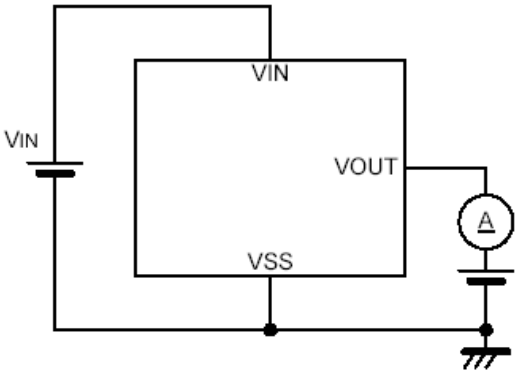

Circuit ④

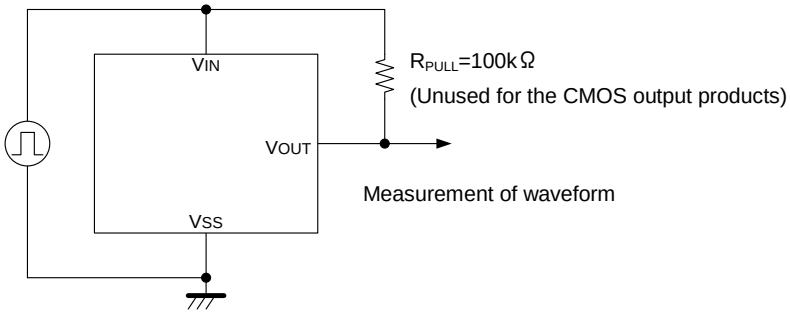

■OPERATIONAL EXPLANATION

●Typical Application Circuit

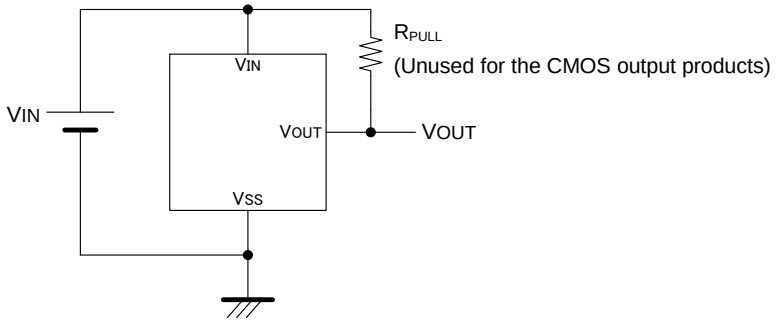

●Timing Charge

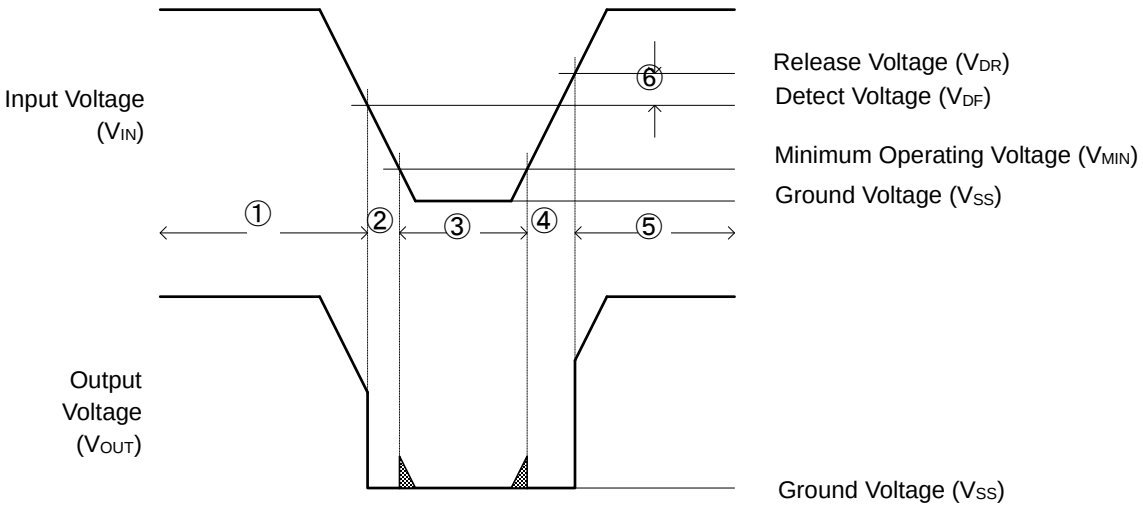

Note: For explaining in a simplified case, an operation time of the circuit is not counted.

The following explains the operation of the typical application circuit along number symbols shown in the timing chart.

① When input voltage (V_{IN}) is higher than detect voltage (V_{DF}), output voltage (V_{OUT}) will be equal to input voltage (V_{IN}). (A condition of high impedance exists with N-ch open drain output configurations.)

② When input voltage (V_{IN}) falls below detect voltage (V_{DF}), output voltage (V_{OUT}) will be equal to the ground voltage (V_{SS}) level.

③ When input voltage (V_{IN}) falls to a level below that of the minimum operating voltage (V_{MIN}), output will become unstable. If In this condition, V_{IN} will equal the pulled-up output (should output be pulled-up.) (Input voltage, V_{IN}, in the typical application circuit.)

④ When input voltage (V_{IN}) rises above the minimum operating voltage (V_{MIN}) level until it achieves a release voltage (V_{DR}), output keeps the ground voltage level (V_{SS}).

⑤ When the input voltage (V_{IN}) rises above the release voltage (V_{DR}), output voltage (V_{OUT} will be equal to input voltage (V_{IN}). (A condition of high impedance exists with N-ch open drain output configurations.)

⑥ The difference between V_{DR} and V_{DF} represents the hysteresis width.

■NOTE ON USE

1. Please use this IC within the stated maximum ratings. For temporary, transitional voltage drop or voltage rising phenomenon, the IC is liable to malfunction should the ratings be exceeded.
2. In order to stabilize the IC's operations, please ensure that V_{IN} pin's input frequency's rise and fall times are more than several μs / V.
3. With a resistor connected between the V_{IN} pin and the power supply V_{DD} some errors may be observed from the input voltage at the detect and release voltage. Those errors are not constant because of the fluctuation of the supply current.
4. When a resistor is connected between the V_{IN} pin and the power supply V_{DD}, oscillation may occur as a result of through current and voltage drop at the R_{IN} at the time of voltage release. (refer to the Oscillation Description (1) below) Especially in the CMOS output configurations, oscillation may occur regardless of detect/release operation if load current (I_{OUT}) exists. (refer to the Oscillation Description (2) below)
5. Please use N-ch open drains configuration, when a resistor R_{IN} is connected between the V_{IN} pin and the power supply V_{DD} power source. In such cases, please ensure that R_{IN} is less than 10kΩ and that C is more than 0.1μF.
6. Torex places an importance on improving our products and its reliability.
   However, by any possibility, we would request user fail-safe design and post-aging treatment on system or equipment.

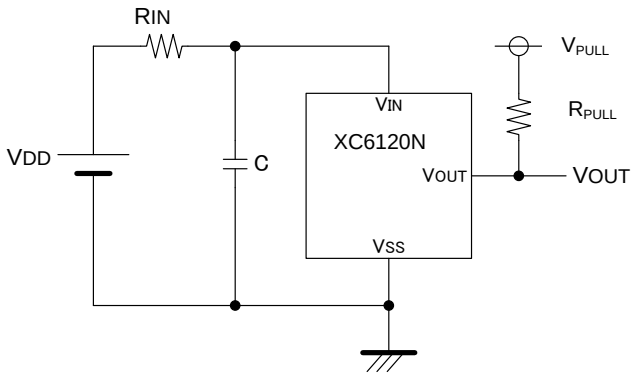

[Figure 1: Circuit connected with the input resistor]

● Oscillation Description

(1) Oscillation as a result of through current

Since the XC6120 series are CMOS ICs, transient through current will flow when the IC's internal circuit switching operates regardless of output configuration. Consequently, oscillation is liable to occur as a result of the similar operations as in (1) above. This oscillation does not occur during the detect operation.

(2) Output current oscillation with the CMOS output configuration

As shown in figure 2, when the voltage applied at the power supply (V_{DD}) rises from below detect voltage to above release voltage, the IC commence release operations and the internal P-ch driver transistor will be on. The output current (I_{OUT}) flows the input resistor (R_{IN}) via the P-ch driver transistor. Because of the input resistor (R_{IN}) and the output current (I_{OUT}), an input pin voltage drops R_{IN} x I_{OUT}. If the voltage drop level is larger than the IC's hysteresis width (V_{HYS}), the input pin voltage will falls below the V_{DF} and detect operations will commerce so that the internal P-ch driver transistor will be off. The voltage drop will stop because the output current (I_{OUT}) which was flowing the P-ch driver transistor will run down. The input pin voltage will become the same voltage level as the input voltage (V_{IN}). For this, the input pin voltage will rise above the release voltage (V_{DR}), therefore, the release operations will begin over again. Oscillation may occur with this repetition. Further, this condition will also appear via means of a similar mechanism during detect operations.

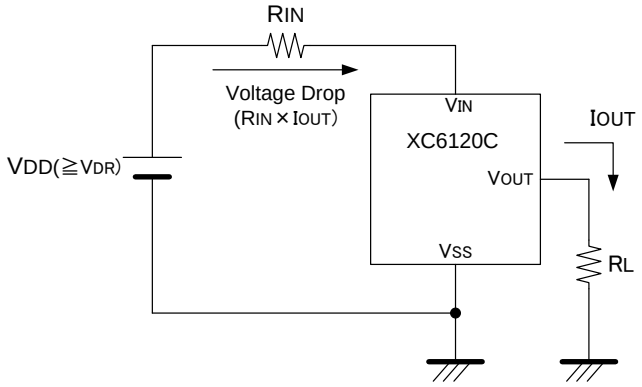

[Figure 2: Oscillation caused by the input resistor of the CMOS output product and the output current]

■TYPICAL PERFORMANCE CHARACTERISTICS

(1) Supply Current vs. Input Voltage

XC6120x102xx

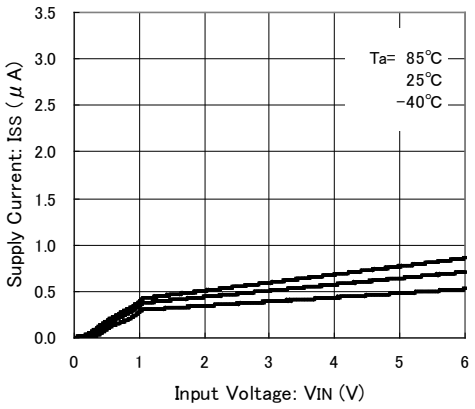

XC6120x502xx

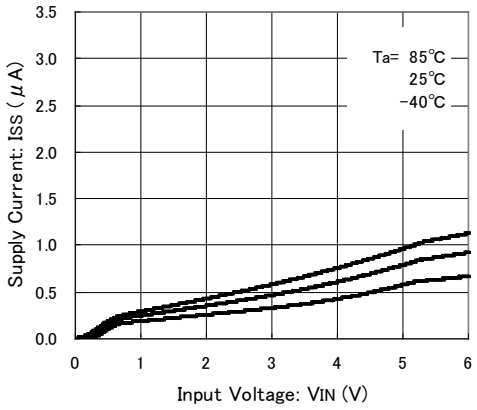

(2) Output Voltage vs. Input Voltage

XC6120C202xx

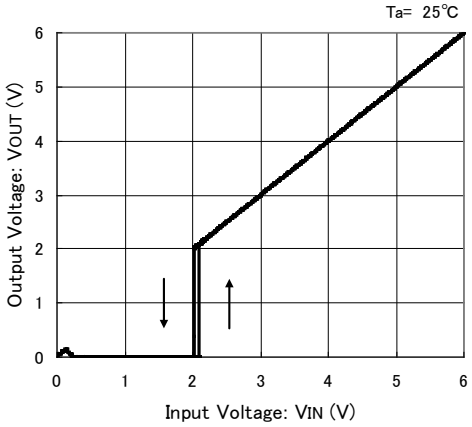

XC6120N202xx

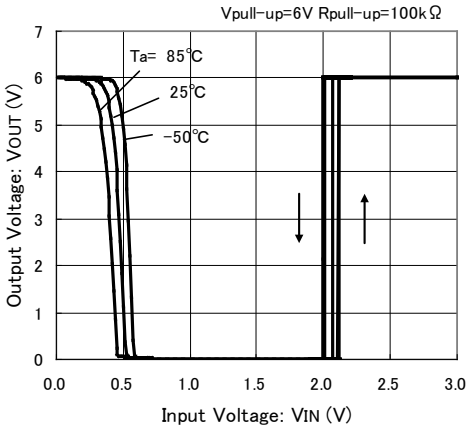

(3) Detect Voltage, Release Voltage vs. Ambient Temperature

XC6120x102xx

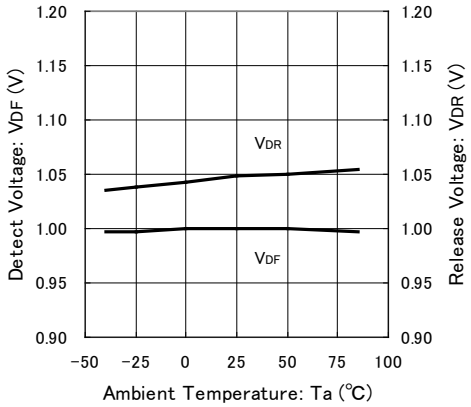

XC6120x202xx

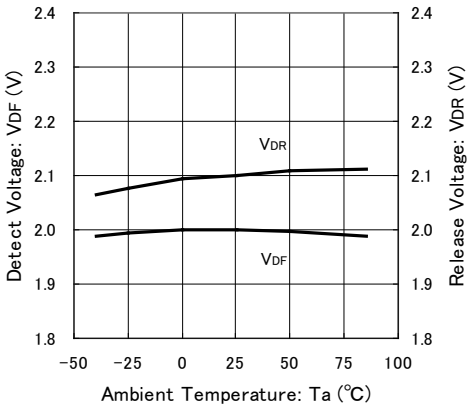

■TYPICAL PERFORMANCE CHARACTERISTICS (Continued)

(4) Output Current (Nch Driver) vs. Input Voltage

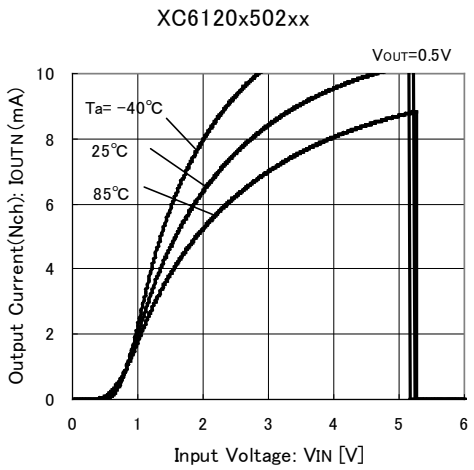

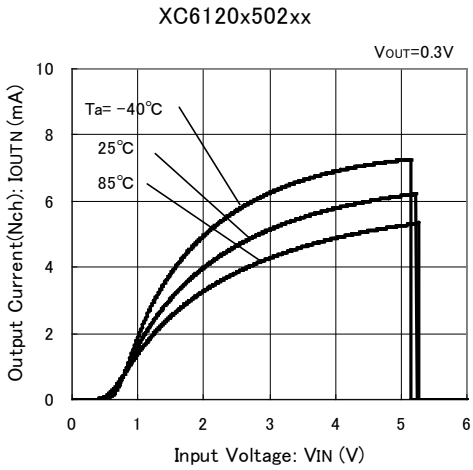

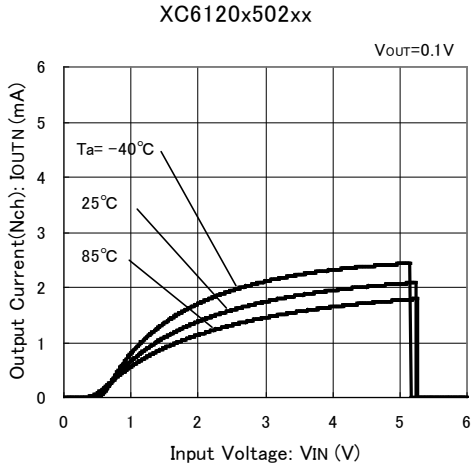

(5) Output Current (Pch Driver) vs. Input Voltage

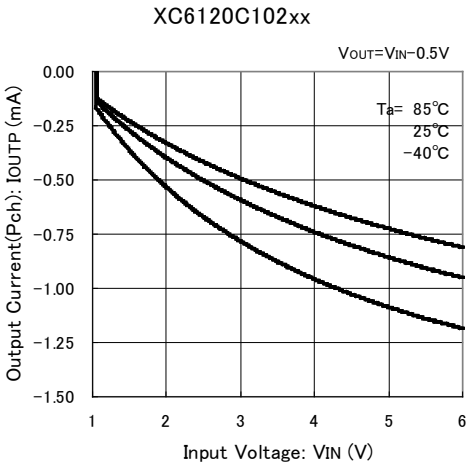

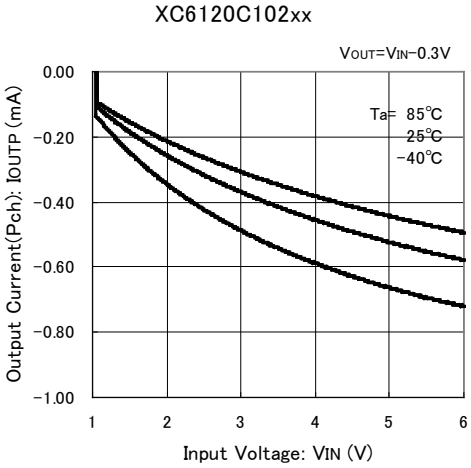

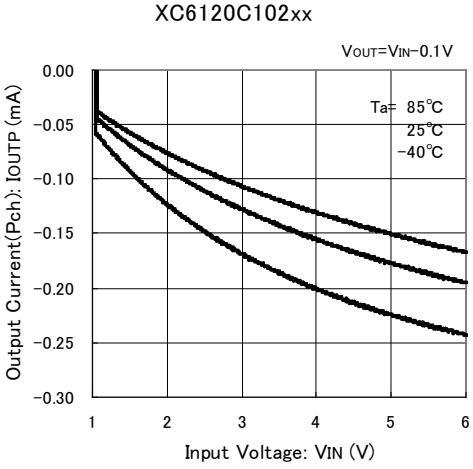

■PACKAGING INFORMATION

For the latest package information go to, www.torexsemi.com/technical-support/packages

PACKAGE	OUTLINE / LAND PATTERN	THERMAL CHARACTERISTICS	
SOT-25	SOT-25 PKG	Standard Board	SOT-25 Power Dissipation
SSOT-24	SSOT-24 PKG	Standard Board	SSOT-24 Power Dissipation
USP-3	USP-3 PKG	Standard Board	USP-3 Power Dissipation

■ MARKING RULE

●SSOT-24

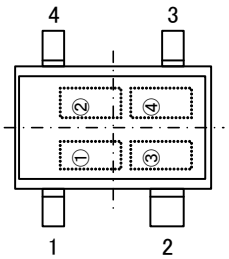

SSOT-24
(TOP VIEW)

① represents output configuration and detect voltage Range

MARK	OUTPUT CONFIGURATION	OUTPUT VOLTAGE	PRODUCT SERIES
K	CMOS	1.0V～2.9V	XC6120C
L		3.0V～5.0V	
M	Nch open drain	1.0V～2.9V	XC6120N
N		3.0V～5.0V	

② represents detect voltage

MARK	DETECT VOLTAGE (V)		MARK	DETECT VOLTAGE (V)	
0	-	3.0	F	1.5	4.5
1	-	3.1	H	1.6	4.6
2	-	3.2	K	1.7	4.7
3	-	3.3	L	1.8	4.8
4	-	3.4	M	1.9	4.9
5	-	3.5	N	2.0	5.0
6	-	3.6	P	2.1	-
7	-	3.7	R	2.2	-
8	-	3.8	S	2.3	-
9	-	3.9	T	2.4	-
A	1.0	4.0	U	2.5	-
B	1.1	4.1	V	2.6	-
C	1.2	4.2	X	2.7	-
D	1.3	4.3	Y	2.8	-
E	1.4	4.4	Z	2.9	-

③, ④ represents production lot number
01 to 09, 10, 11, ⋯, 99, 0A, ⋯, 0Z, 1A, ⋯repeated.
(G, I, J, O, Q, W excluded. Reversed character is not used.)

■ MARKING RULE (Continued)

●USP-3

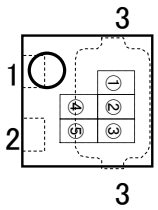

USP-3
(TOP VIEW)

① represents product series

MARK	PRODUCT SERIES
0	XC6120******

② standard：represents output configuration and integer number of detect voltage

●CMOS Output (XC6120C Series)

MARK	DETECT VOLTAGE (V)
A	1.X
B	2.X
C	3.X
D	4.X
E	5.X

●Nch open drain (XC6120N Series)

MARK	DETECT VOLTAGE (V)
F	1.X
H	2.X
K	3.X
L	4.X
M	5.X

●SOT-25

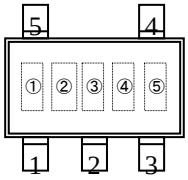

SOT-25
(TOP VIEW)

③ standard：represents decimal point of detect voltage

MARK	DETECT VOLTAGE (V)	PRODUCT SERIES
3	X.3	XC6120**3***
0	X.0	XC6120**0***

④, ⑤ represents production lot number
01 to 09, 10, 11, ･･･, 99, 0A, ･･･, 0Z, 1A, ･･･repeated.
(G, I, J, O, Q, W excluded.)

1. The product and product specifications contained herein are subject to change without notice to improve performance characteristics. Consult us, or our representatives before use, to confirm that the information in this datasheet is up to date.

2. The information in this datasheet is intended to illustrate the operation and characteristics of our products. We neither make warranties or representations with respect to the accuracy or completeness of the information contained in this datasheet nor grant any license to any intellectual property rights of ours or any third party concerning with the information in this datasheet.

3. Applicable export control laws and regulations should be complied and the procedures required by such laws and regulations should also be followed, when the product or any information contained in this datasheet is exported.

4. The product is neither intended nor warranted for use in equipment of systems which require extremely high levels of quality and/or reliability and/or a malfunction or failure which may cause loss of human life, bodily injury, serious property damage including but not limited to devices or equipment used in 1) nuclear facilities, 2) aerospace industry, 3) medical facilities, 4) automobile industry and other transportation industry and 5) safety devices and safety equipment to control combustions and explosions. Do not use the product for the above use unless agreed by us in writing in advance.

5. Although we make continuous efforts to improve the quality and reliability of our products; nevertheless Semiconductors are likely to fail with a certain probability. So in order to prevent personal injury and/or property damage resulting from such failure, customers are required to incorporate adequate safety measures in their designs, such as system fail safes, redundancy and fire prevention features.

6. Our products are not designed to be Radiation-resistant.

7. Please use the product listed in this datasheet within the specified ranges.

8. We assume no responsibility for damage or loss due to abnormal use.

9. All rights reserved. No part of this datasheet may be copied or reproduced unless agreed by Torex Semiconductor Ltd in writing in advance.

TOREX SEMICONDUCTOR LTD.

ООО «ЛайфЭлектроникс» “LifeElectronics” LLC

ИНН 7805602321 КПП 780501001 Р/С 40702810122510004610 ФАКБ "АБСОЛЮТ БАНК" (ЗАО) в г.Санкт-Петербурге К/С 30101810900000000703 БИК 044030703

Компания «Life Electronics» занимается поставками электронных компонентов импортного и отечественного производства от производителей и со складов крупных дистрибьюторов Европы, Америки и Азии.

С конца 2013 года компания активно расширяет линейку поставок компонентов по направлению коаксиальный кабель, кварцевые генераторы и конденсаторы (керамические, пленочные, электролитические), за счёт заключения дистрибьюторских договоров

Мы предлагаем:

- *Конкурентоспособные цены и скидки постоянным клиентам.*
- *Специальные условия для постоянных клиентов.*
- *Подбор аналогов.*
- *Поставку компонентов в любых объемах, удовлетворяющих вашим потребностям.*

- *Приемлемые сроки поставки, возможна ускоренная поставка.*
- *Доставку товара в любую точку России и стран СНГ.*
- *Комплексную поставку.*
- *Работу по проектам и поставку образцов.*
- *Формирование склада под заказчика.*

- *Сертификаты соответствия на поставляемую продукцию (по желанию клиента).*
- *Тестирование поставляемой продукции.*
- *Поставку компонентов, требующих военную и космическую приемку.*
- *Входной контроль качества.*
- *Наличие сертификата ISO.*

В составе нашей компании организован Конструкторский отдел, призванный помогать разработчикам, и инженерам.

Конструкторский отдел помогает осуществить:

- *Регистрацию проекта у производителя компонентов.*
- *Техническую поддержку проекта.*
- *Защиту от снятия компонента с производства.*
- *Оценку стоимости проекта по компонентам.*
- *Изготовление тестовой платы монтаж и пусконаладочные работы.*

Тел: +7 (812) 336 43 04 (многоканальный)
Email: org@lifeelectronics.ru

www.lifeelectronics.ru