HANTRONIX

# PRODUCT SPECIFICATION

# HDA700LT-2S

## 7”, TFT WVGA (800X480) COLOR LCD DISPLAY MODULE

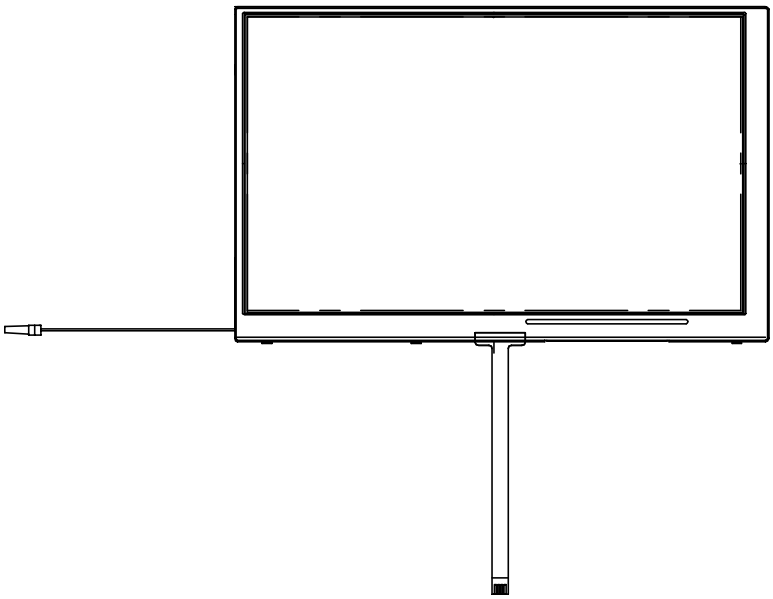

| | | | | |
|---|---|---|---|---|
| HANTRONIX, INC.<br>10080 BUBB RD.<br>CUPERTINO, CA 95014 | Q.A.:<br>Z.W. | REV.:<br>1.0 | HDA700LT-2S | SHEET 1 OF 13<br>DATE: 5/18/12 |

## 1. SUMMARY

This technical specification applies to 7" TFT-LCD module with a LED Backlight unit and 40-pin TTL interface. This module supports 800*R.G.B x 480 WVGA mode and can displ 262,144 colors.

## 2. FEATURES

- Thin and Light Weight.
- WVGA(800x480 pixels) resolution.
- 3.3 V TTL interface

## 3. GENERAL SPECIFICATIONS

| Parameter | | Specifications | Unit |
|---|---|---|---|
| Screen size | | 7"(Diagonal) | inch |
| Display Format | | 800 RGB x 480 | dot |
| Active area | | 152.4x91.44 | mm |
| Pixel size | | 190.5 x 190.5 | um |
| Surface treatment | | Anti-glare | |
| Color Saturation (NTSC) | | 45 | % |
| Pixel Configuration | | RGB Vertical Stripe | |
| Outline dimension | | 165(W) x 104.44(H) x 6.6 (D) | mm |
| Weight | | TBD | g |
| View Angle direction (Gray inversion) | | 6 o'clock | |
| Temperature Range | Operation | -20~70 | ℃ |
| | Storage | -30~80 | ℃ |

## 4. ABSOLUTE MAXIMUM RATINGS (GND=0V)

| Item | Symbol | Condition | Min. | Max. | Unit | Remark |
|---|---|---|---|---|---|---|
| Power Voltage | Vcc | GND=0 | -0.3 | 6 | V | - |
| Input logic voltage | Vi | GND=0 | -0.3 | Vcc+0.3 | V | Note1 |

Note 1: DCLK, DE, R0~ R5, G0~ G5, B0~ B5

## 5. ELECTRICAL CHARACTERISTICS

### 5.1 Recommended Operation condition (GND=0,Ta=25)

| Parameter | | Symbol | Rating | | | Unit | Condition |
|---|---|---|---|---|---|---|---|
| | | | Min. | Typ. | Max. | | |
| Power Supply Voltage | | Vcc | 3 | 3.3 | 3.6 | V | |
| Input logic | High Level | VIH | 0.7Vcc | - | Vcc | V | Note 1 |
| voltage | Low Level | VIL | 0 | - | 0.3Vcc | V | Note 1 |

Note 1: DCLK, DE, R0~ R5, G0~ G5, B0~ B5.

### 5.2 LED Driving Conditions

Ta = 25

| Parameter | Symbol | Min. | Typ. | Max. | Unit | Remark |
|---|---|---|---|---|---|---|
| LED current | $I_{LED}$ | - | 160 | - | mA | Note 1 |
| LED voltage | $V_{LED}$ | - | 9.9 | - | V | |
| LED Life Time | - | 10,000 | 20,000 | - | Hr | Note 2 |

Note 1:There are 8Groups LED shown as below,Vled=9.9V, Iled=160mA

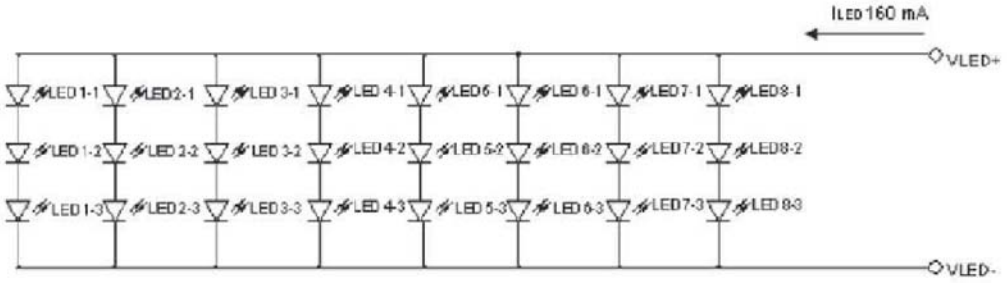


Note 2 : Brightess to be decreased to 50% of the initial value.

### 5.3 TFT-LCD current consumption

| Parameter | Symbol | Rating | | | Unit | Condition |
|---|---|---|---|---|---|---|
| | | Min. | Typ. | Max | | |
| LCD power current | Icc | -- | 200 | 260 | mA | black pattern |
| LED power current | $I_{LED}$ | -- | 160 | 200 | mA | |

## 6. AC CHARATERISTICS

### 6.1 AC Electrical CHARATERISTICS

| Parameter | Symbol | Rating | | | Unit |
|---|---|---|---|---|---|
| | | Min. | Typ. | Max | |
| Data setup time | Tdsu | 6 | - | - | ns |
| Data hold time | Tdhd | 6 | - | - | ns |
| DE setup time | Tesu | 6 | - | - | ns |
| CLK frequency | $F_{CPH}$ | 29.40 | 33.26 | 42.48 | MHz |
| CLK period | $T_{CPH}$ | 23.54 | 30.06 | 34.01 | ns |
| CLK pulse duty | $T_{CWH}$ | 40 | 50 | 60 | % |
| CLK pulse duty | $T_{CWL}$ | 40 | 50 | 60 | % |
| DE period | $T_{DEH}+T_{DEL}$ | 1000 | 1056 | 1200 | $T_{CPH}$ |
| DE pulse width | $T_{DEH}$ | - | 800 | - | $T_{CPH}$ |
| DE frame blanking | $T_{DEB}$ | 10 | 45 | 110 | $T_{DEH}+T_{DEL}$ |
| DE frame width | $T_{DE}$ | - | 480 | - | $T_{DEH}+T_{DEL}$ |

Note We suggest using the typical value, so it can have better performance.

### 6.2 Timing Controller Timing Chart

**Clock and Data input waveforms**

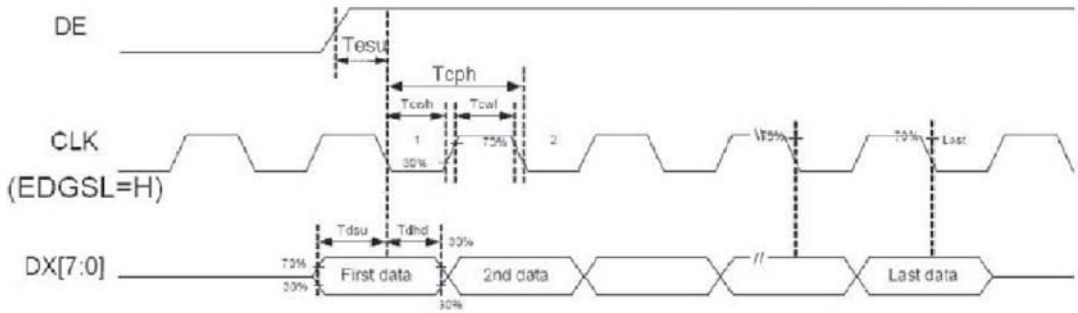

## 6.3 Data input format

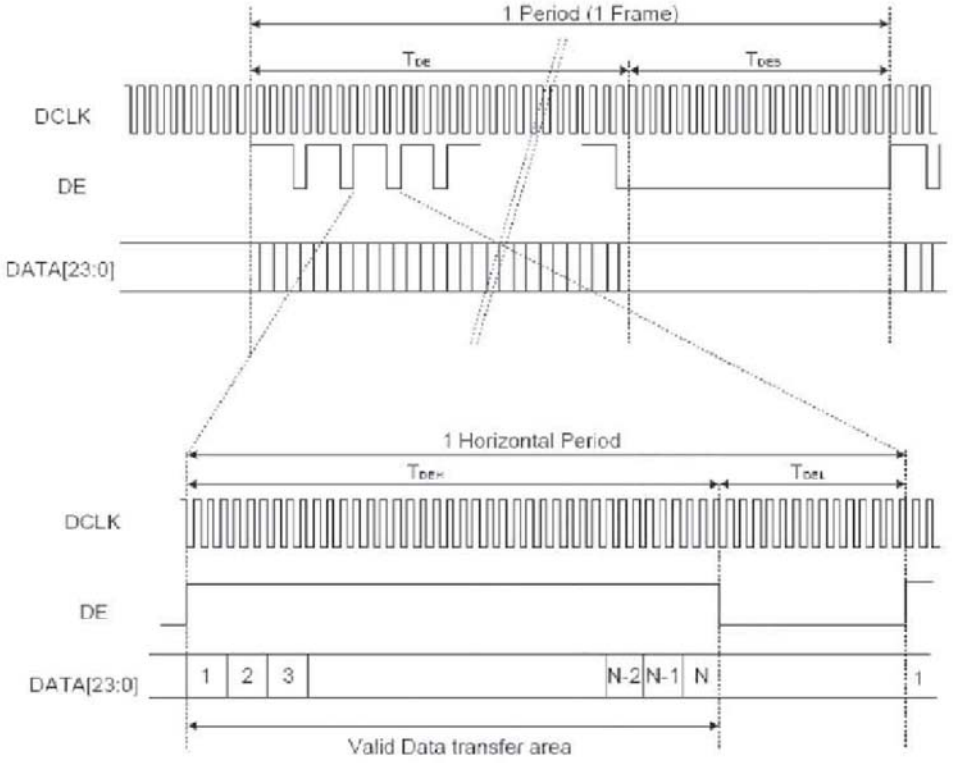

## 6.4 Power ON/OFF sequence

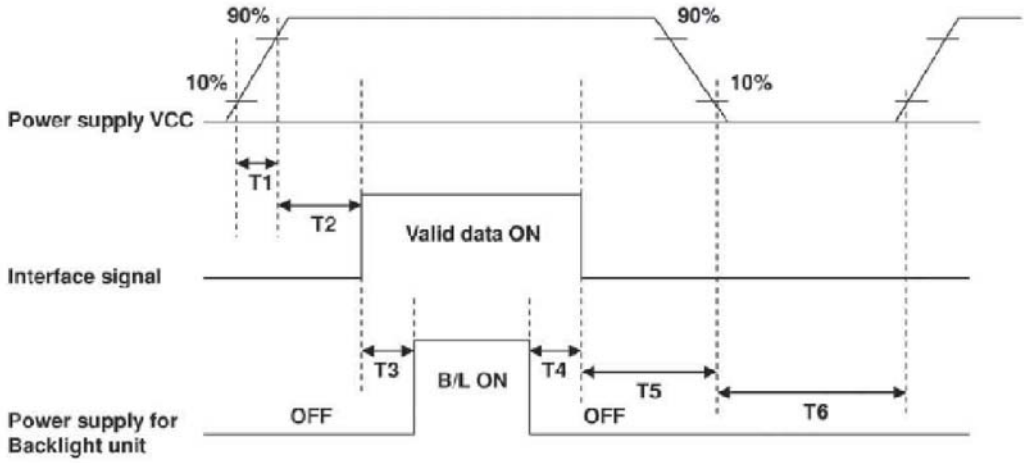


| Parameter | SPEC. | | | Unit |
|---|---|---|---|---|
| | Min. | Typ. | Max. | |
| T1 | 1 | | 2 | ms |
| T2 | 0 | 60 | | ms |
| T3 | 200 | | | ms |
| T4 | 200 | | | ms |
| T5 | 1 | | | ms |
| T6 | 1000 | | | ms |

## 7. OPTICAL CHARATERISTIC

| Item | | Symbol | Condition | Min. | Typ. | Max. | Unit | Remark |
|---|---|---|---|---|---|---|---|---|
| Brightness | | - | Viewing normal angle θ=φ=0 | - | 280 | - | cd/m2 | Center of displaye |
| Response time | | Tr | | - | 5 | 10 | ms | Note 3, 5 |
| | | Tf | | - | 11 | 16 | ms | |
| Contrast ratio | | CR | | 250 | 400 | - | - | Note 4,5 |
| Color Chromaticity | White | Wx | | 0.249 | 0.299 | 0.349 | - | Note 2, 6, 7 |
| | | Wy | | 0.278 | 0.328 | 0.378 | | |
| Viewing angle | Hor | θR | CR≧10 | 60 | 70 | - | Deg. | Note 1 |
| | | θL | | 60 | 70 | - | | |
| | Ver | φl | | 50 | 60 | - | | |
| | | φB | | 60 | 70 | - | | |

Note 1: Definition of viewing angle range

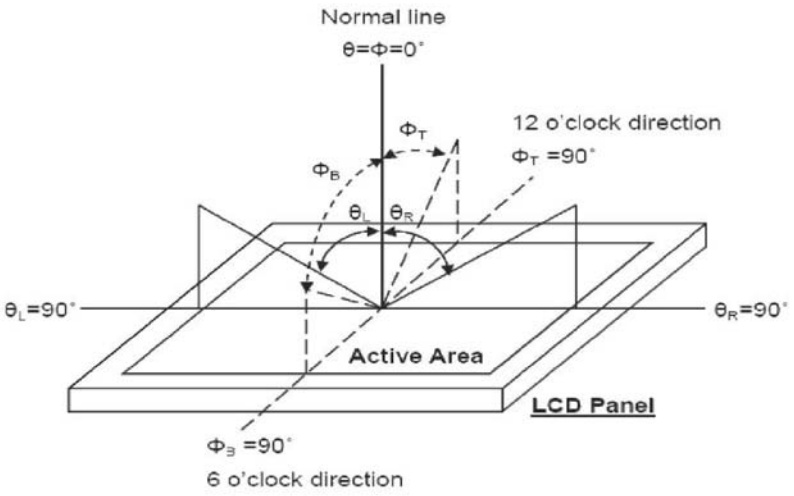


Fig. 7-1 Definition of viewing angle

Note 2: Test equipment setup:

After stabilizing and leaving the panel alone at a driven temperature for 10 minutes,the measurement should be executed. Measurement should be executed in a stable, windless, and dark room. Optical specifications are measured by Topcon BM-7 luminance meter 1.0° field of view at a distance of 50cm and normal direction.

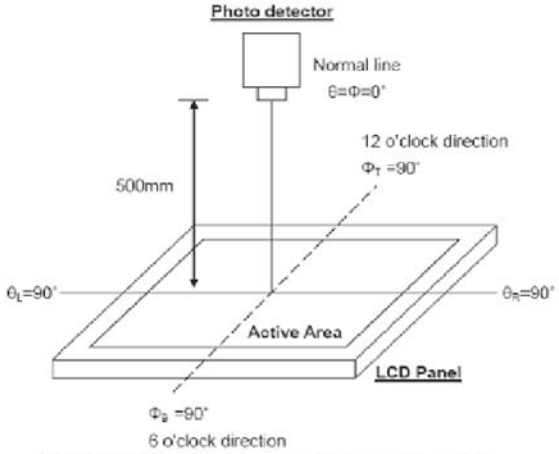


Fig.7-2 Optical measurement system setup

Note 3: Definition of Response time:

The response time is defined as the LCD optical switching time interval between "White state and "Black" state. Rise time, Tr, is the time between photo detector output intensity changed from 90% to 10%. And fall time, Tf, is the

time between photo detector output Intensity changed from 10% to 90%

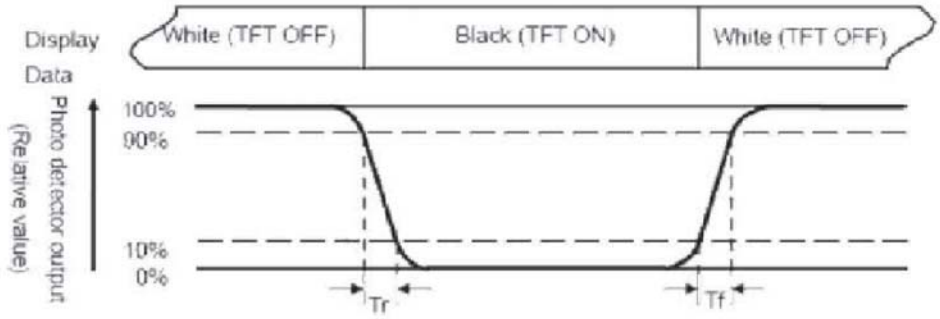


Fig. 7-3 Definition of response time

Note 4: Definition of contrast ratio:
The contrast ratio is defined as the following expression.

Contrast ratio (CR)=

$$\frac{\text{Luminance measured when LCD on the "White" state}}{\text{Luminance measured when LCD on the "Black" state}}$$

Note 5: White Vi = $V_{i50}$ ± 1.5V
Black Vi = $V_{i50}$ ± 2.0V
"±" means that the analog input signal swings in phase with VCOM signal.
"±" means that the analog input signal swings out of phase with VCOM signal.
The 100% transmission is defined as the transmission of LCD panel when all the input terminals of module are electrically opened.

Note 6: Definition of color chromaticity (CIE 1931)
Color coordinates measured at the center point of LCD

Note 7: Measured at the center area of the panel when all the input terminals of LCD panel are electrically opened.

Note 8 : Uniformity (U) = $\frac{\text{Brightness (min)}}{\text{Brightness (max)}}$ x 100% Brightness (max)

## 8. INTERFACE

### 8.1 LCM PIN Definition

| Pin No. | Symbol | Description | Remark |
|---|---|---|---|
| 1 | GND | Power Ground | |
| 2 | GND | Power Ground | |
| 3 | NC | Not Connect | |
| 4 | Vcc | Power Supply for Digital Circuit | |
| 5 | Vcc | Power Supply for Digital Circuit | |
| 6 | Vcc | Power Supply for Digital Circuit | |
| 7 | Vcc | Power Supply for Digital Circuit | |
| 8 | NC | Not Connect | |
| 9 | DE | Data Enable | |
| 10 | GND | Power Ground | |
| 11 | GND | Power Ground | |
| 12 | GND | Power Ground | |
| 13 | B5 | Blue Data 5 (MSB) | |
| 14 | B4 | Blue Data 4 | |
| 15 | B3 | Blue Data 3 | |
| 16 | GND | Power Ground | |
| 17 | B2 | Blue Data 2 | |
| 18 | B1 | Blue Data 1 | |
| 19 | B0 | Blue Data 0 (LSB) | |
| 20 | GND | Power Ground | |
| 21 | G5 | Green Data 5 (MSB) | |
| 22 | G4 | Green Data 4 | |
| 23 | G3 | Green Data 3 | |
| 24 | GND | Power Ground | |
| 25 | G2 | Green Data 2 | |
| 26 | G1 | Green Data 1 | |
| 27 | G0 | Green Data 0 (LSB) | |
| 28 | GND | Power Ground | |
| 29 | R5 | Red Data 5 (MSB) | |
| 30 | R4 | Red Data 4 | |
| 31 | R3 | Red Data 3 | |
| 32 | GND | Power Ground | |
| 33 | R2 | Red Data 2 | |
| 34 | R1 | Red Data 1 | |
| 35 | R0 | Red Data 0 (LSB) | |
| 36 | GND | Power Ground | |
| 37 | GND | Power Ground | |
| 38 | DCLK | Clock Signals ; Latch Data at the Falling Edge | |
| 39 | GND | Power Ground | |
| 40 | GND | Power Ground | |

**T/P**

| Pin No. | Symbol | Description | Remark |
|---|---|---|---|
| 1 | LEFT | The pin of the touch panel | |
| 2 | BOTTOM | The pin of the touch panel | |
| 3 | RIGHT | The pin of the touch panel | |
| 4 | UPPER | The pin of the touch panel | |

## 8.2 Backlight Driving Part

| Pin No. | Symbol | Description |
|---|---|---|
| 1 | VLEDA | Red, LED_ Anode |
| 2 | VLEDK | White, LED_ Cathode |

## 9. BLOCK DIAGRAM

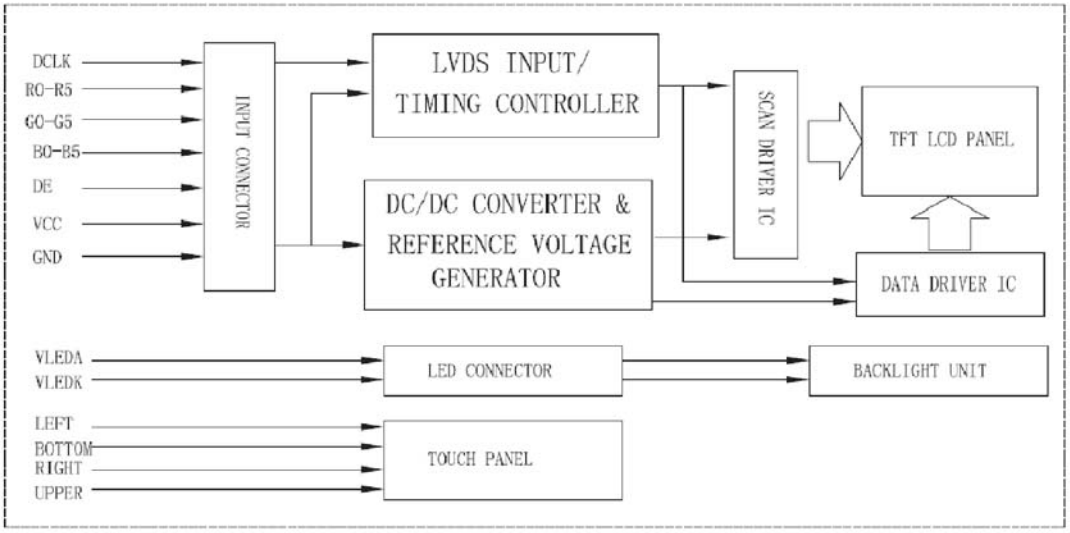

## 10. QUALITY ASSURANCE

| No. | Test Items | Test Condition |
|---|---|---|
| 1 | High Temperature Storage Test | Ta=80℃ Dry 240h |
| 2 | LOW Temperature Storage Test | Ta=-30℃ Dry 240h |
| 3 | High Temperature Operation Test | Ta=70℃ Dry 240h |
| 4 | LOW Temperature Operation Test | Ta=-20℃ Dry 240h |
| 5 | High Temperature and High Humidity Operation Test | Ta=60℃ 90%RH 240h |
| 6 | Electro Static Discharge Test | 150pF,330Ω,±8KV(Contact)/± 15KV(Air),5points/panel, 5 times/point |
| 7 | Shock Test(non-operating) | Half sine wave,180G,2ms one shock of each six faces I.e.run 180G 2ms for all six faces |
| 8 | Vibration Test(non-operating) | Sine wave,10~500~10Hz 1.5G,0.37oct/min 3axis,1hour/axis |
| 9 | Thermat Shock Test | -20℃(0.5h)~70℃(0.5h)/100 cycles(Dry) |

****Ta=Ambient Temperature

## 12. TOUCH PANEL RAWING

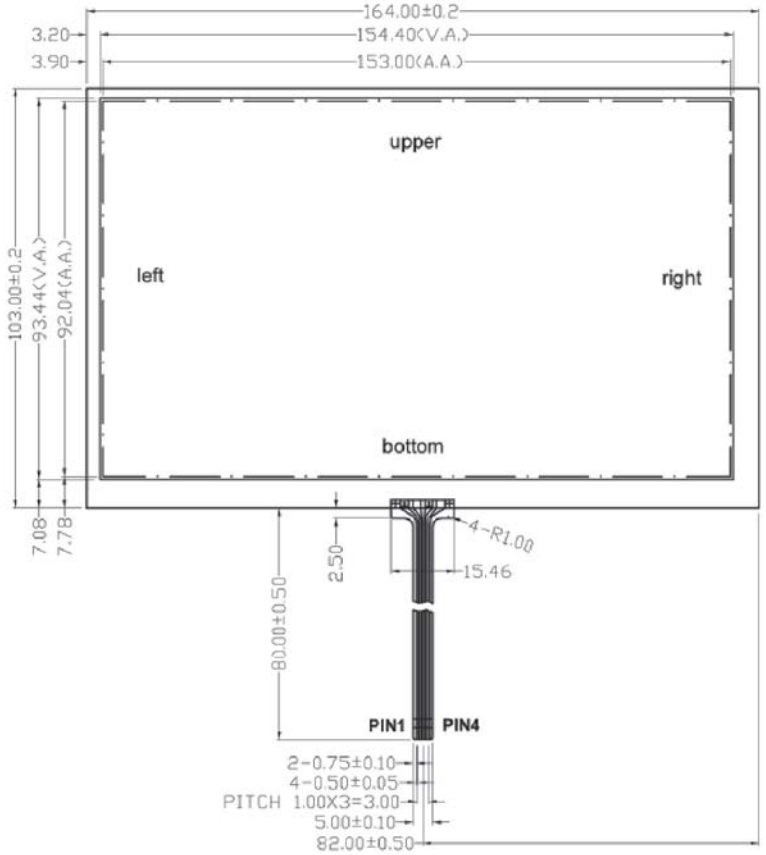


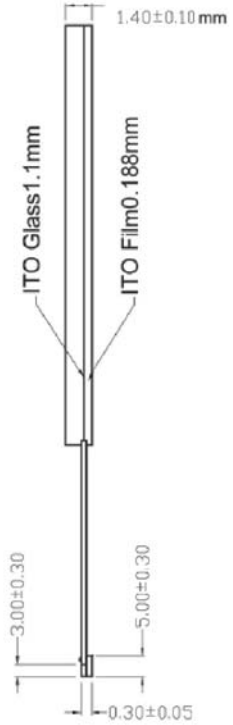


## NOTE：

1. Driving condition: DC5V；
2. Operation force：60~100g；
3. Linearity ≤±1.5%；Insulation resistance＞10MΩ，25V(DC)；
4. Operating environment：-20℃~+70℃，≤80%RH；
5. Storage environment：-30℃~+80℃，＜80%RH；
6. Light transparency：＞75%；
7 . Structure type：ITO Film/ITO Glass(F/G)；
8. Connector type：FPC connect；
9. ITO Film type：Anti-glare hard coating and anti-newton ring ；
10. Tapping durability：1,000,000 times；
11. Bound time：＜10ms;
12. Compliant ROHS.

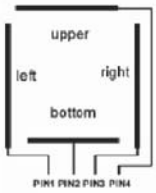


| | | | | |
|---|---|---|---|---|
| HANTRONIX, INC.<br>10080 BUBB RD.<br>CUPERTINO, CA 95014 | Q.A.:<br>Z.W. | REV.:<br>1.0 | HDA700LT-2S | SHEET 12 OF 13<br>DATE: 5/18/12 |

| PIN | SYMBOL | PIN | SYMBOL |
|---|---|---|---|
| 1 | GND | 21 | G5 |
| 2 | GND | 22 | G4 |
| 3 | NC | 23 | G3 |
| 4 | VCC | 24 | GND |
| 5 | VCC | 25 | G2 |
| 6 | VCC | 26 | G1 |
| 7 | VCC | 27 | G0 |
| 8 | NC | 28 | GND |
| 9 | DE | 29 | R5 |
| 10 | GND | 30 | R4 |
| 11 | GND | 31 | R3 |
| 12 | GND | 32 | GND |
| 13 | B5 | 33 | R2 |
| 14 | B4 | 34 | R1 |
| 15 | B3 | 35 | R0 |
| 16 | GND | 36 | GND |
| 17 | B2 | 37 | GND |
| 18 | B1 | 38 | DCLK |
| 19 | B0 | 39 | GND |
| 20 | GND | 40 | GND |

| ??? ??? | ????? | ???? ????? |
|---|---|---|
| ? ?????? | ????? | |
| | | |

| T/P | |
|---|---|
| 1 | LEFT |
| 2 | BOTTOM |
| 3 | RIGHT |
| 4 | UPPER |

???

| | | |
|---|---|---|
| 1 | Operating Voltage: | Vcc=3.3V typ. |
| 2 | Resolution: | 800RGB*480 |
| 3 | Color: | 262K |
| 4 | Interface: | RGB |
| 5 | Display type: | Transmissive |
| 6 | Viewing Direction: | **12:00 |
| 7 | Operating Temp: | -20°C~70°C |
| 8 | Storage Temp: | -30°C~80°C |
| 9 | Driver IC: | HX8262*2,HX8678*1 |
| 10 | Unspecified tolerance: | ±0.2 |

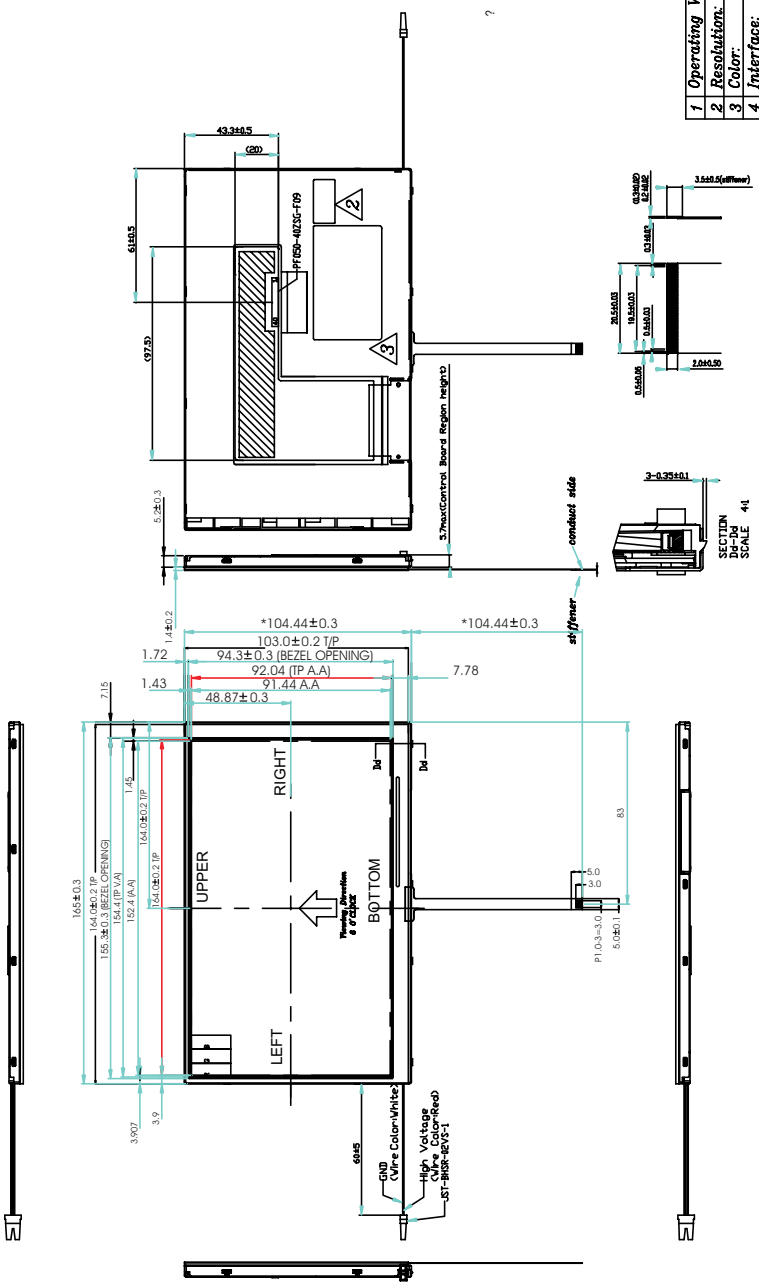


| HANTRONIX, INC.<br>10080 BUBB RD.<br>CUPERTINO, CA 95014 | Q.A.:<br>Z.W. | REV.:<br>1.0 | HDA700LT-2S | SHEET 13 OF 13<br>DATE: 5/18/12 |
|---|---|---|---|---|

ООО «ЛайфЭлектроникс» “LifeElectronics” LLC

ИНН 7805602321 КПП 780501001 Р/С 40702810122510004610 ФАКБ "АБСОЛЮТ БАНК" (ЗАО) в г.Санкт-Петербурге К/С 30101810900000000703 БИК 044030703

*Компания «Life Electronics» занимается поставками электронных компонентов импортного и отечественного производства от производителей и со складов крупных дистрибьюторов Европы, Америки и Азии.*

*С конца 2013 года компания активно расширяет линейку поставок компонентов по направлению коаксиальный кабель, кварцевые генераторы и конденсаторы (керамические, пленочные, электролитические), за счёт заключения дистрибьюторских договоров*

*Мы предлагаем:*

- *Конкурентоспособные цены и скидки постоянным клиентам.*
- *Специальные условия для постоянных клиентов.*
- *Подбор аналогов.*
- *Поставку компонентов в любых объемах, удовлетворяющих вашим потребностям.*

- *Приемлемые сроки поставки, возможна ускоренная поставка.*
- *Доставку товара в любую точку России и стран СНГ.*
- *Комплексную поставку.*
- *Работу по проектам и поставку образцов.*
- *Формирование склада под заказчика.*

- *Сертификаты соответствия на поставляемую продукцию (по желанию клиента).*
- *Тестирование поставляемой продукции.*
- *Поставку компонентов, требующих военную и космическую приемку.*
- *Входной контроль качества.*
- *Наличие сертификата ISO.*

*В составе нашей компании организован Конструкторский отдел, призванный помогать разработчикам, и инженерам.*

*Конструкторский отдел помогает осуществить:*

- *Регистрацию проекта у производителя компонентов.*
- *Техническую поддержку проекта.*
- *Защиту от снятия компонента с производства.*
- *Оценку стоимости проекта по компонентам.*
- *Изготовление тестовой платы монтаж и пусконаладочные работы.*

*Тел: +7 (812) 336 43 04 (многоканальный)*
*Email: org@lifeelectronics.ru*

***www.lifeelectronics.ru***