Radial Box Metallized Polyester Capacitors

The Type 160 series radial lead metallized polyester box capacitors are constructed in rugged rectangular plastic cases with lead spacings that are standard in the electronics industry. All Type 160 capacitors are available in bulk with a .217" ±.039" lead length, and they are good for general purpose applications such as bypass, decoupling, energy storage/discharge and arc suppression.

Highlights

- RoHS compliant
- Rugged plastic case
- Case and epoxy fill meets UL94V0
- 10 mm through 27.5 mm lead spacings
- Non-inductively wound
- Non-polar
- Wire lead material, tinned copper clad steel

Specifications

Capacitance Range: 0.0022 µF to 10.0 µF

Voltage Range: 63 Vdc to 1000 Vdc (40 Vac - 250 Vac 50/60 Hz)

Capacitance Tolerance: ±5%, ±10%, ±20%

Operating Temperature Range: –55 ºC to +125 ºC (with 50% Vdc derating >85 ºC)

Dielectric Withstand Voltage: 1.6 x rated voltage for 2 sec @ +25 ºC ±5 ºC

Dissipation Factor (DF): $\tan\delta \times 10^{-4}$ at 25 ºC ±5 ºC

kHz	C ≤1 µF	C >1 µF
1	≤100	≤100
10	≥150	

Total Self Inductance (L):

Pitch (mm)	10	15	22.5	27.5
L (nH) ≈	9	10	18	18

Long Term Stability (after two years): Capacitance change $\Delta C/C \leq \pm 3\%$ under standard environmental conditions

Corona (Partial Discharge Inception Voltage): 200 Vac for 100 Vdc, 200 Vdc
250 Vac for 400 Vdc, 630 Vdc
300 Vac for 1000 Vdc

Maximum Pulse Rise Time (dv/dt):

	Pitch (mm)			
Vn	10	15	22.5	27.5
63	3	1.5	1	1
100/160	6/8	3	2	1
250	11	7	4	3
400	20	10	5.5	5
630	30	15	8	7
1000	60	25	15	10

If the working voltage (V) is less than the nominal voltage (Vn), the capacitor can work at higher dv/dt. In this case, the maximum value allowed is obtained by multiplying the above value with the ratio Vn/V.

Type 160 Metallized Polyester Radial Lead Capacitors

Capacitor Outline Drawing

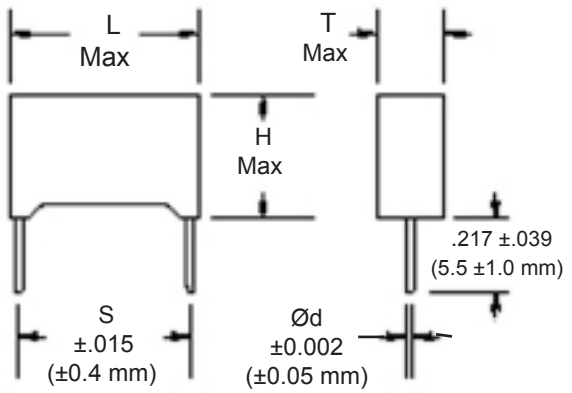

Note: The lead diameter is a maximum dimension for lead spacing ≤15 mm and a nominal for lead spacing >15 mm

Test Method and Performance

Insulation Resistance	
Test Conditions	
Temperature	25 °C ±5 °C
Voltage Charge Time	1 minute
Voltage Charge	50 Vdc for Vn < 100 Vdc
	100 Vdc for Vn ≥ 100 Vdc
Performance	
For Vn > 100 Vdc	≥30,000 MΩ for ≤ 0.33µF
	≥10,000 MΩ x µF for C > 0.33µF
For Vn ≤100 Vdc	≥10,000 MΩ for C ≤ 0.1µF
	≥1,000 MΩ x µF for ≤ 0.1µF

Damp Heat Test	
Test Conditions	
Temperature	+40 °C
Relative Humidity	95%
Test Duration	21 days
Performance	
Capacitance Change ΔC/C	≤ ±5%
DF Change Δtgδ	≤50 x 10^4 at 1 kHz
Insulation Resistance	≥ 50% of limit value

Soldering	
Test Conditions	
Soldering Temperature	260 °C ±5 °C
Soldering Duration	10 sec ±1 sec
Performance	
Capacitance Change ΔC/C	≤ ±2%
DF Change Δtgδ	≤30 x 10^{-4} at 10 kHz for C ≤1.0 µF
	≤20 x 10^{-4} at 1 kHz for C >1.0 µF

Life Test	
Test Conditions	
Temperature	+85 °C
Test Duration	1000 hrs
Voltage Applied	1.25 x Vn
Performance	
Capacitance Change ΔC/C	≤ ±5%
DF Change Δtgδ	≤30 x 10^{-4} at 10 kHz for C ≤1.0 µF
	≤20 x 10^{-4} at 1 kHz for C >1.0 µF
Insulation Resistance	≥ 50% of limit value

Ratings — RoHS Compliant

Cap (µF)	Catalog Part Number	Inches					Millimeters				
		L	T	H	S	Ød	L	T	H	S	Ød
	63 Vdc / 40 Vac										
.22	160224*63C–F	0.512	0.157	0.374	0.394	0.031	13.0	4.0	9.5	10.0	0.8
.27	160274*63C–F	0.512	0.157	0.374	0.394	0.031	13.0	4.0	9.5	10.0	0.8
.33	160334*63C–F	0.512	0.157	0.374	0.394	0.031	13.0	4.0	9.5	10.0	0.8
.39	160394*63C–F	0.512	0.157	0.374	0.394	0.031	13.0	4.0	9.5	10.0	0.8
.47	160474*63D–F	0.512	0.197	0.433	0.394	0.031	13.0	5.0	11.0	10.0	0.8
.56	160564*63D–F	0.512	0.197	0.433	0.394	0.031	13.0	5.0	11.0	10.0	0.8
.68	160684*63D–F	0.512	0.197	0.433	0.394	0.031	13.0	5.0	11.0	10.0	0.8
.68	160684*63F–F	0.709	0.197	0.433	0.591	0.031	18.0	6.0	12.0	15.0	0.8
.82	160824*63E–F	0.512	0.236	0.472	0.394	0.031	13.0	6.0	12.0	10.0	0.8
.82	160824*63F–F	0.709	0.197	0.433	0.591	0.031	18.0	5.0	11.0	15.0	0.8
1.0	160105*63E–F	0.512	0.236	0.472	0.394	0.031	13.0	6.0	12.0	10.0	0.8
1.0	160105*63F–F	0.709	0.197	0.433	0.591	0.031	18.0	5.0	11.0	15.0	0.8
1.5	160155*63F–F	0.709	0.197	0.433	0.591	0.031	18.0	6.0	12.0	15.0	0.8
2.2	160225*63G–F	0.709	0.236	0.472	0.591	0.031	18.0	7.5	13.5	15.0	0.8
3.3	160335*63M–F	1.043	0.276	0.630	0.886	0.031	26.5	7.0	16.5	22.5	0.8
4.7	160475*63N–F	1.043	0.335	0.669	0.886	0.031	26.5	8.5	17.0	22.5	0.8
6.8	160685*63O–F	1.043	0.394	0.748	0.886	0.031	26.5	10.0	19.0	22.5	0.8
10.0	160106*63P–F	1.260	0.433	0.787	1.083	0.031	32.0	11.0	20.0	27.5	0.8

* Indicates capacitance tolerance: J = ±5%, K = ±10%, M = ±20%

Type 160 Metallized Polyester Radial Lead Capacitors

RoHS Compliant

Cap (µF)	Catalog Part Number	Inches					Millimeters				
		L	T	H	S	Ød	L	T	H	S	Ød
100 Vdc / 63 Vac											
.10	160104*100C–F	0.512	0.157	0.374	0.394	0.031	13.0	4.0	9.5	10.0	0.8
.12	160124*100C–F	0.512	0.157	0.374	0.394	0.031	13.0	4.0	9.5	10.0	0.8
.15	160154*100C–F	0.512	0.157	0.374	0.394	0.031	13.0	4.0	9.5	10.0	0.8
.18	160184*100C–F	0.512	0.157	0.374	0.394	0.031	13.0	4.0	9.5	10.0	0.8
.22	160224*100D–F	0.512	0.197	0.433	0.394	0.031	13.0	5.0	11.0	10.0	0.8
.27	160274*100D–F	0.512	0.197	0.433	0.394	0.031	13.0	5.0	11.0	10.0	0.8
.33	160334*100E–F	0.512	0.236	0.472	0.394	0.031	13.0	6.0	12.0	10.0	0.8
.33	160334*100F–F	0.709	0.197	0.433	0.591	0.031	18.0	5.0	11.0	15.0	0.8
.39	160394*100D–F	0.512	0.197	0.433	0.394	0.031	13.0	6.0	12.0	10.0	0.8
.39	160394*100F–F	0.709	0.197	0.433	0.591	0.031	18.0	5.0	11.0	15.0	0.8
.47	160474*100E–F	0.512	0.236	0.472	0.394	0.031	13.0	6.0	12.0	10.0	0.8
.47	160474*100F–F	0.709	0.197	0.433	0.591	0.031	18.0	5.0	11.0	15.0	0.8
.56	160564*100G–F	0.709	0.236	0.472	0.591	0.031	18.0	6.0	12.0	15.0	0.8
.68	160684*100G–F	0.709	0.236	0.472	0.591	0.031	18.0	6.0	12.0	15.0	0.8
.82	160824*100H–F	0.709	0.295	0.531	0.591	0.031	18.0	7.5	13.5	15.0	0.8
1.0	160105*100H–F	0.709	0.295	0.531	0.591	0.031	18.0	7.5	13.5	15.0	0.8
1.5	160155*100M–F	1.043	0.276	0.630	0.886	0.031	26.5	7.0	16.5	22.5	0.8
2.2	160225*100N–F	1.043	0.335	0.669	0.886	0.031	26.5	8.5	17.0	22.5	0.8
3.3	160335*100O–F	1.043	0.394	0.748	0.886	0.031	26.5	10.0	19.0	22.5	0.8
4.7	160475*100P–F	1.260	0.433	0.787	1.083	0.031	32.0	11.0	20.0	27.5	0.8
6.8	160685*100Q–F	1.260	0.512	0.886	1.083	0.031	32.0	13.0	22.5	27.5	0.8
10.0	160106*100S–F	1.457	0.709	1.299	1.083	0.031	37.0	18.0	33.0	27.5	0.8
160 Vdc / 100 Vac											
.10	160104*160C–F	0.512	0.157	0.374	0.394	0.031	13.0	4.0	9.5	10.0	0.8
250 Vdc /160 Vac											
.033	160333*250C–F	0.512	0.157	0.374	0.394	0.031	13.0	4.0	9.5	10.0	0.8
.039	160393*250C–F	0.512	0.157	0.374	0.394	0.031	13.0	4.0	9.5	10.0	0.8
.047	160473*250C–F	0.512	0.157	0.374	0.394	0.031	13.0	4.0	9.5	10.0	0.8
.056	160563*250C–F	0.512	0.157	0.374	0.394	0.031	13.0	4.0	9.5	10.0	0.8
.068	160683*250C–F	0.512	0.157	0.374	0.394	0.031	13.0	4.0	9.5	10.0	0.8
.082	160823*250D–F	0.512	0.197	0.433	0.394	0.031	13.0	5.0	11.0	10.0	0.8
.10	160104*250D–F	0.512	0.197	0.433	0.394	0.031	13.0	5.0	11.0	10.0	0.8
.10	160104*250F–F	0.709	0.197	0.433	0.591	0.031	18.0	5.0	11.0	15.0	0.8
.12	160124*250D–F	0.512	0.197	0.433	0.394	0.031	13.0	6.0	12.0	10.0	0.8
.12	160124*250F–F	0.709	0.197	0.433	0.591	0.031	18.0	5.0	11.0	15.0	0.8
.15	160154*250E–F	0.512	0.236	0.472	0.394	0.031	13.0	6.0	12.0	10.0	0.8
.15	160154*250F–F	0.709	0.197	0.433	0.591	0.031	18.0	5.0	11.0	15.0	0.8
.18	160184*250E–F	0.512	0.236	0.472	0.394	0.031	13.0	6.0	12.0	10.0	0.8
.18	160184*250F–F	0.709	0.197	0.433	0.591	0.031	18.0	5.0	11.0	15.0	0.8
.22	160224*250F–F	0.709	0.197	0.433	0.591	0.031	18.0	5.0	11.0	15.0	0.8
.27	160274*250G–F	0.709	0.236	0.472	0.591	0.031	18.0	6.0	12.0	15.0	0.8
.33	160334*250G–F	0.709	0.236	0.472	0.591	0.031	18.0	6.0	12.0	15.0	0.8
.39	160394*250H–F	0.709	0.295	0.531	0.591	0.031	18.0	7.5	13.5	15.0	0.8
.47	160474*250H–F	0.709	0.295	0.531	0.591	0.031	18.0	7.5	13.5	15.0	0.8
.47	160474*250L–F	1.043	0.236	0.591	0.886	0.031	26.5	6.0	15.0	22.5	0.8
.56	160564*250I–F	0.709	0.335	0.571	0.591	0.031	18.0	8.5	14.5	15.0	0.8
.56	160564*250M–F	1.043	0.276	0.63	0.886	0.031	26.5	7.0	16.0	22.5	0.8
.68	160684*250I–F	0.709	0.335	0.571	0.591	0.031	18.0	8.5	14.5	15.0	0.8
.68	160684*250M–F	1.043	0.276	0.63	0.886	0.031	26.5	7.0	16.5	22.5	0.8
.82	160824*250M–F	1.043	0.276	0.63	0.886	0.031	26.5	8.5	17.0	22.5	0.8

* Indicates capacitance tolerance: J = ±5%, K = ±10%, M = ±20%

Type 160 Metallized Polyester Radial Lead Capacitors

RoHS Compliant

Cap (µF)	Catalog Part Number	Inches					Millimeters				
		L	T	H	S	Ød	L	T	H	S	Ød
250 Vdc / 160 Vac											
1.0	160105*250N–F	1.043	0.335	0.669	0.886	0.031	26.5	8.5	17.0	22.5	0.8
1.5	160155*250O–F	1.043	0.394	0.748	0.886	0.031	26.5	10.0	19.0	22.5	0.8
2.2	160225*250P–F	1.260	0.433	0.787	1.083	0.031	32.0	11.0	20.0	27.5	0.8
3.3	160335*250Q–F	1.260	0.512	0.886	1.083	0.031	32.0	13.0	22.5	27.5	0.8
4.7	160475*250R–F	1.260	0.591	1.181	1.083	0.031	32.0	15.0	30.0	27.5	0.8
6.8	160685*250S–F	1.457	0.709	1.299	1.083	0.031	37.0	18.0	33.0	27.5	0.8
400 Vdc / 200 Vac											
.012	160123*400C–F	0.512	0.157	0.374	0.394	0.031	13.0	4.0	9.5	10.0	0.8
.015	160153*400C–F	0.512	0.157	0.374	0.394	0.031	13.0	4.0	9.5	10.0	0.8
.018	160183*400C–F	0.512	0.157	0.374	0.394	0.031	13.0	4.0	9.5	10.0	0.8
.022	160223*400C–F	0.512	0.157	0.374	0.394	0.031	13.0	4.0	9.5	10.0	0.8
.027	160273*400C–F	0.512	0.157	0.374	0.394	0.031	13.0	4.0	9.5	10.0	0.8
.033	160333*400D–F	0.512	0.197	0.433	0.394	0.031	13.0	5.0	11.0	10.0	0.8
.039	160393*400D–F	0.512	0.197	0.433	0.394	0.031	13.0	5.0	11.0	10.0	0.8
.047	160473*400E–F	0.512	0.236	0.472	0.394	0.031	13.0	6.0	12.0	10.0	0.8
.047	160473*400F–F	0.709	0.197	0.433	0.591	0.031	18.0	5.0	11.0	15.0	0.8
.056	160563*400F–F	0.709	0.197	0.433	0.591	0.031	18.0	5.0	11.0	15.0	0.8
.068	160683*400F–F	0.709	0.197	0.433	0.591	0.031	18.0	5.0	11.0	15.0	0.8
.082	160823*400F–F	0.709	0.197	0.433	0.591	0.031	18.0	5.0	11.0	15.0	0.8
.10	160104*400G–F	0.709	0.236	0.472	0.591	0.031	18.0	6.0	12.0	15.0	0.8
.12	160124*400G–F	0.709	0.236	0.472	0.591	0.031	18.0	6.0	12.0	15.0	0.8
.15	160154*400H–F	0.709	0.295	0.531	0.591	0.031	18.0	7.5	13.5	15.0	0.8
.15	160154*400L–F	1.043	0.236	0.591	0.886	0.031	26.5	6.0	15.0	22.5	0.8
.18	160184*400L–F	1.043	0.236	0.591	0.886	0.031	26.5	6.0	15.0	22.5	0.8
.22	160224*400L–F	1.043	0.236	0.591	0.886	0.031	26.5	6.0	15.0	22.5	0.8
.27	160274*400M–F	1.043	0.276	0.630	0.886	0.031	26.5	7.0	16.5	22.5	0.8
.33	160334*400M–F	1.043	0.276	0.630	0.886	0.031	26.5	7.0	16.5	22.5	0.8
.39	160394*400N–F	1.043	0.335	0.669	0.886	0.031	26.5	8.5	17.0	22.5	0.8
.47	160474*400N–F	1.043	0.335	0.669	0.886	0.031	26.5	8.5	17.0	22.5	0.8
.56	160564*400O–F	1.043	0.394	0.748	0.886	0.031	26.5	10.0	19.0	22.5	0.8
.68	160684*400P–F	1.26	0.433	0.787	1.083	0.031	32.0	11.0	20.0	27.5	0.8
.82	160824*400P–F	1.26	0.433	0.787	1.083	0.031	32.0	11.0	20.0	27.5	0.8
1.0	160105*400P–F	1.26	0.433	0.787	1.083	0.031	32.0	11.0	20.0	27.5	0.8
1.0	160105*400Q–F	1.26	0.512	0.886	1.083	0.031	32.0	13.0	22.5	27.5	0.8
630 Vdc / 220 Vac											
.0039	160392*630C–F	0.512	0.157	0.374	0.394	0.031	13.0	4.0	9.5	10.0	0.8
.0047	160472*630C–F	0.512	0.157	0.374	0.394	0.031	13.0	4.0	9.5	10.0	0.8
.0056	160562*630C–F	0.512	0.157	0.374	0.394	0.031	13.0	4.0	9.5	10.0	0.8
.0068	160682*630C–F	0.512	0.157	0.374	0.394	0.031	13.0	4.0	9.5	10.0	0.8
.0082	160822*630C–F	0.512	0.157	0.374	0.394	0.031	13.0	4.0	9.5	10.0	0.8
.010	160103*630C–F	0.512	0.157	0.374	0.394	0.031	13.0	4.0	9.5	10.0	0.8
.012	160123*630D–F	0.512	0.197	0.433	0.394	0.031	13.0	5.0	11.0	10.0	0.8
.015	160153*630D–F	0.512	0.197	0.433	0.394	0.031	13.0	5.0	11.0	10.0	0.8
.018	160183*630D–F	0.512	0.197	0.433	0.394	0.031	13.0	5.0	11.0	10.0	0.8
.022	160223*630E–F	0.512	0.236	0.472	0.394	0.031	13.0	6.0	12.0	10.0	0.8
.027	160273*630F–F	0.709	0.197	0.433	0.591	0.031	18.0	5.0	11.0	15.0	0.8
.033	160333*630F–F	0.709	0.197	0.433	0.591	0.031	18.0	5.0	11.0	15.0	0.8
.039	160393*630G–F	0.709	0.236	0.472	0.591	0.031	18.0	6.0	12.0	15.0	0.8
.047	160473*630G–F	0.709	0.236	0.472	0.591	0.031	18.0	6.0	12.0	15.0	0.8
.056	160563*630G–F	0.709	0.236	0.472	0.591	0.031	18.0	6.0	12.0	15.0	0.8

* Indicates capacitance tolerance: J = ±5%, K = ±10%, M = ±20%

Type 160 Metallized Polyester Radial Lead Capacitors

RoHS Compliant

Cap (µF)	Catalog Part Number	Inches					Millimeters				
		L	T	H	S	Ød	L	T	H	S	Ød
630 Vac / 220 Vac											
.068	160683*630H–F	0.709	0.295	0.531	0.591	0.031	18.0	7.5	13.5	15.0	0.8
.068	160683*630L–F	1.043	0.236	0.591	0.886	0.031	26.5	6.0	15.0	22.5	0.8
.082	160823*630L–F	1.043	0.236	0.591	0.886	0.031	26.5	6.0	15.0	22.5	0.8
.10	160104*630L–F	1.043	0.236	0.591	0.886	0.031	26.5	6.0	15.0	22.5	0.8
.12	160124*630M–F	1.043	0.276	0.630	0.886	0.031	26.5	7.0	16.5	22.5	0.8
.15	160154*630M–F	1.043	0.276	0.630	0.886	0.031	26.5	7.0	16.5	22.5	0.8
.18	160184*630N–F	1.043	0.335	0.669	0.886	0.031	26.5	8.5	17.0	22.5	0.8
.22	160224*630N–F	1.043	0.335	0.669	0.886	0.031	26.5	8.5	17.0	22.5	0.8
.27	160274*630Q–F	1.26	0.512	0.886	1.083	0.031	32.0	13.0	22.5	27.5	0.8
.33	160334*630P–F	1.26	0.433	0.787	1.083	0.031	32.0	11.0	20.0	27.5	0.8
.39	160394*630P–F	1.26	0.433	0.787	1.083	0.031	32.0	11.0	20.0	27.5	0.8
.47	160474*630Q–F	1.26	0.512	0.886	1.083	0.031	32.0	13.0	22.5	27.5	0.8
1000 Vdc / 250 Vac											
.0022	160222*1000C–F	0.512	0.157	0.374	0.394	0.031	13.0	4.0	9.5	10.0	0.8
.0027	160272*1000C–F	0.512	0.157	0.374	0.394	0.031	13.0	4.0	9.5	10.0	0.8
.0033	160332*1000C–F	0.512	0.157	0.374	0.394	0.031	13.0	4.0	9.5	10.0	0.8
.0039	160392*1000D–F	0.512	0.197	0.433	0.394	0.031	13.0	5.0	11.0	10.0	0.8
.0047	160472*1000D–F	0.512	0.197	0.433	0.394	0.031	13.0	5.0	11.0	10.0	0.8
.0056	160562*1000D–F	0.512	0.197	0.433	0.394	0.031	13.0	5.0	11.0	10.0	0.8
.0068	160682*1000D–F	0.512	0.197	0.433	0.394	0.031	13.0	5.0	11.0	10.0	0.8
.0082	160822*1000D–F	0.512	0.197	0.433	0.394	0.031	13.0	5.0	11.0	10.0	0.8
.010	160103*1000F–F	0.709	0.197	0.433	0.591	0.031	18.0	5.0	11.0	15.0	0.8
.012	160123*1000F–F	0.709	0.197	0.433	0.591	0.031	18.0	5.0	11.0	15.0	0.8
.015	160153*1000F–F	0.709	0.197	0.433	0.591	0.031	18.0	6.0	12.0	15.0	0.8
.018	160183*1000G–F	0.709	0.236	0.472	0.591	0.031	18.0	6.0	12.0	15.0	0.8
.022	160223*1000G–F	0.709	0.236	0.472	0.591	0.031	18.0	6.0	12.0	15.0	0.8
.027	160273*1000H–F	0.709	0.295	0.531	0.591	0.031	18.0	7.5	13.5	15.0	0.8
.033	160333*1000L–F	1.043	0.236	0.591	0.886	0.031	26.5	6.0	15.0	22.5	0.8
.039	160393*1000L–F	1.043	0.236	0.591	0.886	0.031	26.5	6.0	15.0	22.5	0.8
.047	160473*1000L–F	1.043	0.236	0.591	0.886	0.031	26.5	6.0	15.0	22.5	0.8
.056	160563*1000M–F	1.043	0.276	0.630	0.886	0.031	26.5	7.0	16.5	22.5	0.8
.068	160683*1000M–F	1.043	0.276	0.630	0.886	0.031	26.5	7.0	16.5	22.5	0.8
.082	160823*1000N–F	1.043	0.335	0.669	0.886	0.031	26.5	8.5	17.0	22.5	0.8
.10	160104*1000N–F	1.043	0.335	0.669	0.886	0.031	26.5	8.5	17.0	22.5	0.8
.12	160124*1000O–F	1.043	0.394	0.748	0.886	0.031	26.5	10.0	19.0	22.5	0.8
.15	160154*1000P–F	1.26	0.433	0.787	1.083	0.031	32.0	11.0	20.0	27.5	0.8
.18	160184*1000Q–F	1.26	0.512	0.886	1.083	0.031	32.0	13.0	22.5	27.5	0.8
.22	160224*1000Q–F	1.26	0.512	0.886	1.083	0.031	32.0	13.0	22.5	27.5	0.8

* Indicates capacitance tolerance: J = ±5%, K = ±10%, M = ±20%

Part Numbering System

160	104	K	100	C
Series	Capacitance	Tolerance	Voltage	Case Code
160	392 = .0039 µF	J = ±5%	100 = 100 Vdc	C
	103 = .01 µF	K = ±10%	250 = 250 Vdc	D
	104 = .1 µF	M = ±20%	630 = 630 Vdc	E
	105 = 1.0 µF		1000 = 1000 Vdc	F
				etc.

ООО «ЛайфЭлектроникс» “LifeElectronics” LLC

ИНН 7805602321 КПП 780501001 Р/С 40702810122510004610 ФАКБ "АБСОЛЮТ БАНК" (ЗАО) в г.Санкт-Петербурге К/С 30101810900000000703 БИК 044030703

Компания «Life Electronics» занимается поставками электронных компонентов импортного и отечественного производства от производителей и со складов крупных дистрибьюторов Европы, Америки и Азии.

С конца 2013 года компания активно расширяет линейку поставок компонентов по направлению коаксиальный кабель, кварцевые генераторы и конденсаторы (керамические, пленочные, электролитические), за счёт заключения дистрибьюторских договоров

Мы предлагаем:

- *Конкурентоспособные цены и скидки постоянным клиентам.*
- *Специальные условия для постоянных клиентов.*
- *Подбор аналогов.*
- *Поставку компонентов в любых объемах, удовлетворяющих вашим потребностям.*

- *Приемлемые сроки поставки, возможна ускоренная поставка.*
- *Доставку товара в любую точку России и стран СНГ.*
- *Комплексную поставку.*
- *Работу по проектам и поставку образцов.*
- *Формирование склада под заказчика.*

- *Сертификаты соответствия на поставляемую продукцию (по желанию клиента).*
- *Тестирование поставляемой продукции.*
- *Поставку компонентов, требующих военную и космическую приемку.*
- *Входной контроль качества.*
- *Наличие сертификата ISO.*

В составе нашей компании организован Конструкторский отдел, призванный помогать разработчикам, и инженерам.

Конструкторский отдел помогает осуществить:

- *Регистрацию проекта у производителя компонентов.*
- *Техническую поддержку проекта.*
- *Защиту от снятия компонента с производства.*
- *Оценку стоимости проекта по компонентам.*
- *Изготовление тестовой платы монтаж и пусконаладочные работы.*

Тел: +7 (812) 336 43 04 (многоканальный)
Email: org@lifeelectronics.ru

www.lifeelectronics.ru