- **Very Low Power Consumption . . . 2 mW Typ at V_{DD} = 5 V**
- **Capable of Operation in Astable Mode**
- **CMOS Output Capable of Swinging Rail to Rail**
- **High Output-Current Capability**
  Sink 100 mA Typ
  Source 10 mA Typ
- **Output Fully Compatible With CMOS, TTL, and MOS**
- **Low Supply Current Reduces Spikes During Output Transitions**
- **High-Impedance Inputs . . . 10^{12} Ω Typ**
- **Single-Supply Operation From 1 V to 18 V**
- **Functionally Interchangeable With the NE556; Has Same Pinout**

D OR N PACKAGE
(TOP VIEW)

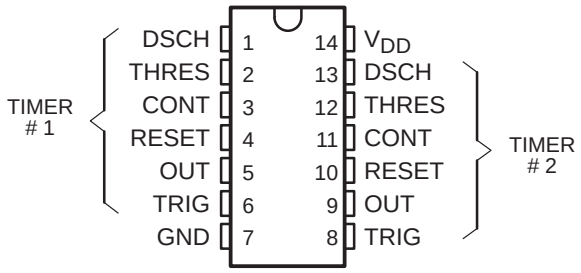

functional block diagram (each timer)

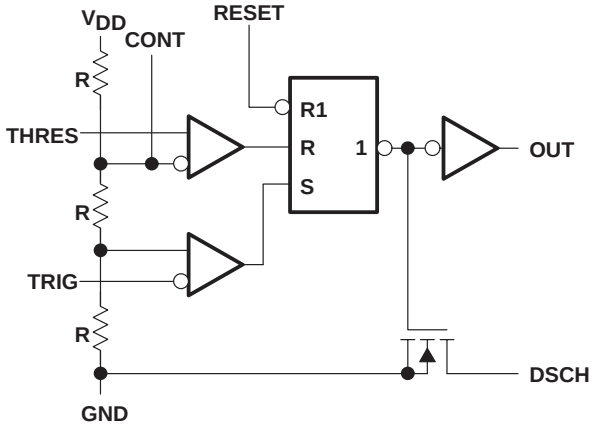

RESET can override TRIG and THRES.
TRIG can override THRES.

description

The TLC552 is a dual monolithic timing circuit fabricated using TI LinCMOS™ process, which provides full compatibility with CMOS, TTL, and MOS logic and operation at frequencies up to 2 MHz. Accurate time delays and oscillations are possible with smaller, less-expensive timing capacitors than the NE555 because of the high input impedance. Power consumption is low across the full range of power supply voltages.

Like the NE556, the TLC552 has a trigger level approximately one-third of the supply voltage and a threshold level approximately two-thirds of the supply voltage. These levels can be altered by use of the control voltage terminal. When the trigger input falls below the trigger level, the flip-flop is set and the output goes high. If the trigger input is above the trigger level and the threshold input is above the threshold level, the flip-flop is reset and the output is low. The reset input can override all other inputs and can be used to initiate a new timing cycle. If the reset input is low, the flip-flop is reset and the output is low. Whenever the output is low, a low-impedance path is provided between the discharge terminal and ground.

While the CMOS output is capable of sinking over 100 mA and sourcing over 10 mA, the TLC552 exhibits greatly reduced supply-current spikes during output transitions. This minimizes the need for the large decoupling capacitors required by the NE556.

AVAILABLE OPTIONS

SYMBOLIZATION		OPERATING TEMPERATURE RANGE	V_T max at 25°C
DEVICE	PACKAGE SUFFIX		
TLC552C	D,N	0°C to 70°C	3.8 mV

The D packages are available taped and reeled. Add the suffix R to the device type when ordering (i.e., TLC552CDR).

LinCMOS is a trademark of Texas Instruments Incorporated.

PRODUCTION DATA information is current as of publication date. Products conform to specifications per the terms of Texas Instruments standard warranty. Production processing does not necessarily include testing of all parameters.

Copyright © 1988, Texas Instruments Incorporated

description (continued)

These devices have internal electrostatic discharge (ESD) protection circuits that will prevent catastrophic failures at voltages up to 2000 V as tested under MIL-STD-883C, Method 3105.2. However, care should be exercised in handling these devices as exposure to ESD may result in a degradation of the device parametric performance.

All unused inputs should be tied to an appropriate logic level to prevent false triggering.

The TLC552C is characterized for operation from 0°C to 70°C.

FUNCTION TABLE

RESET VOLTAGE†	TRIGGER VOLTAGE†	THRESHOLD VOLTAGE†	OUTPUT	DISCHARGE SWITCH
< MIN	Irrelevant	Irrelevant	Low	On
> MAX	< MIN	Irrelevant	High	Off
> MAX	> MAX	> MAX	Low	On
> MAX	> MAX	< MIN	As previously established	

† For conditions shown as MIN or MAX, use the appropriate value specified under electrical characteristics.

absolute maximum ratings over operating free-air temperature range (unless otherwise noted)

Supply voltage, V_{DD} (see Note 1) . . . . . 18 V
Input voltage range (any input) . . . . . – 0.3 V to V_{DD}
Sink current, DSCH or OUT . . . . . 150 mA
Source current, OUT . . . . . 15 mA
Continuous total dissipation . . . . . See Dissipation Rating Table
Operating free-air temperature range . . . . . 0°C to 75°C
Storage temperature range . . . . . – 65°C to 150°C
Lead temperature 1,6 mm (1/16 inch) from case for 10 seconds . . . . . 260°C

NOTES: 1. All voltage values are with respect to network ground terminal.

DISSIPATION RATING TABLE

PACKAGE	POWER RATING	DERATING FACTOR	ABOVE T_A
D	950 mW	7.6 mW/°C	25°C
N	1150 mW	9.2 mW/°C	25°C

recommended operating conditions

	MIN	MAX	UNIT
Supply voltage, V_{DD}	1	18	V
Operating free-air temperature range, T_A	0	70	°C

electrical characteristics at specified free-air temperature, V_{DD} = 1 V

PARAMETER	TEST CONDITIONS	T_A†	MIN	TYP	MAX	UNIT
Threshold voltage level		25°C	0.475	0.67	0.85	V
		Full range	0.45		0.875	
Threshold current		25°C		10		pA
		MAX		75		
Trigger voltage level		25°C	0.15	0.33	0.425	V
		Full range	0.1		1.45	
Trigger current		25°C		10		pA
		MAX		75		
Reset voltage level		25°C	0.4	0.7	1	V
		Full range	0.3		1	
Reset current		25°C		10		pA
		MAX		75		
Control voltage (open-circuit) as a percentage of supply voltage		MAX		66.7%		
Discharge switch on-state voltage	I_{OL} = 100 μA	25°C		0.02	0.15	V
		Full range			0.2	
Discharge switch off-state current		25°C		0.1		nA
		MAX		0.5		
Low-level output voltage	I_{OL} = 100 μA	25°C		0.03	0.2	V
		Full range			0.25	
High-level output voltage	I_{OH} = –10 μA	25°C	0.6	0.98		V
		Full range	0.6			
Supply current		25°C		30	200	μA
		Full range			300	

† Full range (MIN to MAX) is 0°C to 70°C.

electrical characteristics at specified free-air temperature, V_{DD} = 2 V

PARAMETER	TEST CONDITIONS	T_A†	MIN	TYP	MAX	UNIT
Threshold voltage level		25°C	0.95	1.33	1.65	V
		Full range	0.85		1.75	
Threshold current		25°C		10		pA
		MAX		75		
Trigger voltage level		25°C	0.4	0.67	0.95	V
		Full range	0.3		1.05	
Trigger current		25°C		10		pA
		MAX		75		
Reset voltage level		25°C	0.4	1.1	1.5	V
		Full range	0.3		1.8	
Reset current		25°C		10		pA
		MAX		75		
Control voltage (open-circuit) as a percentage of supply voltage		MAX		66.7%		
Discharge switch on-state voltage	I_{OL} = 1 mA	25°C		0.03	0.2	V
		Full range			0.25	
Discharge switch off-state current		25°C		0.1		nA
		MAX		0.5		
Low-level output voltage	I_{OL} = 1 mA	25°C		0.07	0.3	V
		Full range			0.35	
High-level output voltage	I_{OH} = –300 µA	25°C	1.5	1.9		V
		Full range	1.5			
Supply current		25°C		130	500	µA
		Full range			800	

† Full range (MIN to MAX) is 0°C to 70°C.

electrical characteristics at specified free-air temperature, V_{DD} = 5 V

PARAMETER	TEST CONDITIONS	T_A†	MIN	TYP	MAX	UNIT
Threshold voltage level		25°C	2.8	3.3	3.8	V
		Full range	2.7		3.9	
Threshold current		25°C		10		pA
		MAX		75		
Trigger voltage level		25°C	1.36	1.66	1.96	V
		Full range	1.26		2.06	
Trigger current		25°C		10		pA
		MAX		75		
Reset voltage level		25°C	0.4	1.1	1.5	V
		Full range	0.3		1.8	
Reset current		25°C		10		pA
		MAX		75		
Control voltage (open-circuit) as a percentage of supply voltage		MAX		66.7%		
Discharge switch on-state voltage	I_{OL} = 10 mA	25°C		0.14	0.5	V
		Full range			0.6	
Discharge switch off-state current		25°C		0.1		nA
		MAX		0.5		
Low-level output voltage	I_{OL} = 8 mA	25°C		0.21	0.4	V
		Full range			0.5	
	I_{OL} = 5 mA	25°C		0.13	0.3	
		Full range			0.4	
	I_{OL} = 3.2 mA	25°C		0.08	0.3	
		Full range			0.35	
High-level output voltage	I_{OH} = –1 mA	25°C	4.1	4.8		V
		Full range	4.1			
Supply current		25°C		340	700	μA
		Full range			1000	

† Full range (MIN to MAX) is 0°C to 70°C.

electrical characteristics at specified free-air temperature, V_{DD} = 15 V

PARAMETER	TEST CONDITIONS	T_A†	MIN	TYP	MAX	UNIT
Threshold voltage level		25°C	9.45	10	10.55	V
		Full range	9.35		10.65	
Threshold current		25°C		10		pA
		MAX		75		
Trigger voltage level		25°C	4.65	5	5.35	V
		Full range	4.55		5.45	
Trigger current		25°C		10		pA
		MAX		75		
Reset voltage level		25°C	0.4	1.1	1.5	V
		Full range	0.3		1.8	
Reset current		25°C		10		pA
		MAX		75		
Control voltage (open-circuit) as a percentage of supply voltage		MAX		66.7%		
Discharge switch on-state voltage	I_{OL} = 100 mA	25°C		0.77	1.7	V
		Full range			1.8	
Discharge switch off-state current		25°C		0.1		nA
		MAX		0.5		
Low-level output voltage	I_{OL} = 100 mA	25°C		1.28	3.2	V
		Full range			3.6	
	I_{OL} = 50 mA	25°C		0.63	1	
		Full range			1.3	
	I_{OL} = 10 mA	25°C		0.12	0.3	
		Full range			0.4	
High-level output voltage	I_{OH} = –10 mA	25°C	12.5	14.2		V
		Full range	12.5			
	I_{OH} = –5 mA	25°C	13.5	14.6		
		Full range	13.5			
	I_{OH} = –1 mA	25°C	14.2	14.9		
		Full range	14.2			
Supply current		25°C		0.72	1.2	mA
		Full range			1.6	

† Full range (MIN to MAX) is 0°C to 70°C.

electrical characteristics at specified free-air temperature, V_{DD} = 18 V

PARAMETER	TEST CONDITIONS	T_A†	MIN	TYP	MAX	UNIT
Threshold voltage level		25°C	11.4	12	12.6	V
		Full range	10.9		12.7	
Threshold current		25°C		10		pA
		MAX		75		
Trigger voltage level		25°C	5.6	6	6.4	V
		Full range	5.5		6.5	
Trigger current		25°C		10		pA
		MAX		75		
Reset voltage level		25°C	0.4	1.1	1.5	V
		Full range	0.3		1.8	
Reset current		25°C		10		pA
		MAX		75		
Control voltage (open-circuit) as a percentage of supply voltage		MAX		66.7%		
Discharge switch on-state voltage	I_{OL} = 100 mA	25°C		0.72	1.5	V
		Full range			1.6	
Discharge switch off-state current		25°C		0.1		nA
		MAX		0.5		
Low-level output voltage	I_{OL} = 3.2 mA	25°C		0.04	0.3	V
		Full range			0.35	
High-level output voltage	I_{OH} = –1 mA	25°C	17.3	17.9		V
		Full range	17.3			
Supply current		25°C		0.84	1.2	mA
		Full range			1.6	

† Full range (MIN to MAX) is 0°C to 70°C.

operating characteristics, V_{DD} = 5 V, T_A = 25°C (unless otherwise noted)

PARAMETER	TEST CONDITIONS		MIN	TYP	MAX	UNIT
Initial error of timing interval‡	V_{DD} = 5 V to 15 V, C_T = 0.1 µF,	R_A = R_B = 1 kΩ to 100 kΩ, See Note 2		1%	3%	
Supply voltage sensitivity of timing interval				0.1	0.5	%/V
Output pulse rise time	R_L = 10 MΩ,	C_L = 10 pF		20	75	ns
Output pulse fall time				15	60	
Maximum frequency in astable mode	R_A = 470 Ω, C_T = 200 pF,	R_B = 200 Ω, See Note 2	1.2	2.8		MHz

‡ Timing interval error is defined as the difference between the measured value and the nominal value of a random sample.
NOTE 2: R_A, R_B, and C_T are as defined in Figure 1.

APPLICATION INFORMATION

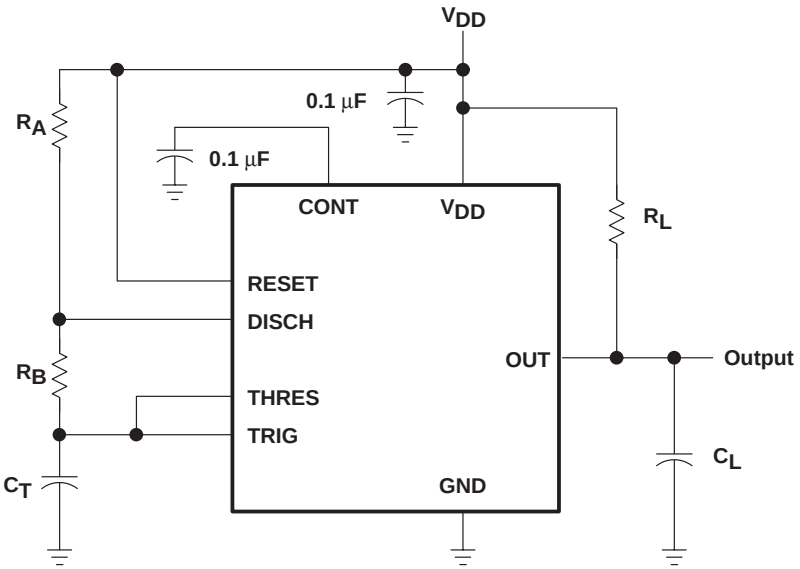

Figure 1. Circuit for Astable Operation

PACKAGING INFORMATION

Orderable Device	Status [1]	Package Type	Package Drawing	Pins	Package Qty	Eco Plan [2]	Lead/ Ball Finish	MSL Peak Temp [3]	Samples (Requires Login)
TLC552CD	ACTIVE	SOIC	D	14	50	Green (RoHS & no Sb/Br)	CU NIPDAU	Level-1-260C-UNLIM	
TLC552CDG4	ACTIVE	SOIC	D	14	50	Green (RoHS & no Sb/Br)	CU NIPDAU	Level-1-260C-UNLIM	
TLC552CDR	ACTIVE	SOIC	D	14	2500	Green (RoHS & no Sb/Br)	CU NIPDAU	Level-1-260C-UNLIM	
TLC552CDRG4	ACTIVE	SOIC	D	14	2500	Green (RoHS & no Sb/Br)	CU NIPDAU	Level-1-260C-UNLIM	
TLC552CN	ACTIVE	PDIP	N	14	25	Pb-Free (RoHS)	CU NIPDAU	N / A for Pkg Type	
TLC552CNE4	ACTIVE	PDIP	N	14	25	Pb-Free (RoHS)	CU NIPDAU	N / A for Pkg Type	

[1] The marketing status values are defined as follows:
ACTIVE: Product device recommended for new designs.
LIFEBUY: TI has announced that the device will be discontinued, and a lifetime-buy period is in effect.
NRND: Not recommended for new designs. Device is in production to support existing customers, but TI does not recommend using this part in a new design.
PREVIEW: Device has been announced but is not in production. Samples may or may not be available.
OBSOLETE: TI has discontinued the production of the device.

[2] Eco Plan - The planned eco-friendly classification: Pb-Free (RoHS), Pb-Free (RoHS Exempt), or Green (RoHS & no Sb/Br) - please check http://www.ti.com/productcontent for the latest availability information and additional product content details.
TBD: The Pb-Free/Green conversion plan has not been defined.
Pb-Free (RoHS): TI's terms "Lead-Free" or "Pb-Free" mean semiconductor products that are compatible with the current RoHS requirements for all 6 substances, including the requirement that lead not exceed 0.1% by weight in homogeneous materials. Where designed to be soldered at high temperatures, TI Pb-Free products are suitable for use in specified lead-free processes.
Pb-Free (RoHS Exempt): This component has a RoHS exemption for either 1) lead-based flip-chip solder bumps used between the die and package, or 2) lead-based die adhesive used between the die and leadframe. The component is otherwise considered Pb-Free (RoHS compatible) as defined above.
Green (RoHS & no Sb/Br): TI defines "Green" to mean Pb-Free (RoHS compatible), and free of Bromine (Br) and Antimony (Sb) based flame retardants (Br or Sb do not exceed 0.1% by weight in homogeneous material)

[3] MSL, Peak Temp. -- The Moisture Sensitivity Level rating according to the JEDEC industry standard classifications, and peak solder temperature.

Important Information and Disclaimer: The information provided on this page represents TI's knowledge and belief as of the date that it is provided. TI bases its knowledge and belief on information provided by third parties, and makes no representation or warranty as to the accuracy of such information. Efforts are underway to better integrate information from third parties. TI has taken and continues to take reasonable steps to provide representative and accurate information but may not have conducted destructive testing or chemical analysis on incoming materials and chemicals. TI and TI suppliers consider certain information to be proprietary, and thus CAS numbers and other limited information may not be available for release.

In no event shall TI's liability arising out of such information exceed the total purchase price of the TI part(s) at issue in this document sold by TI to Customer on an annual basis.

TAPE AND REEL INFORMATION

REEL DIMENSIONS

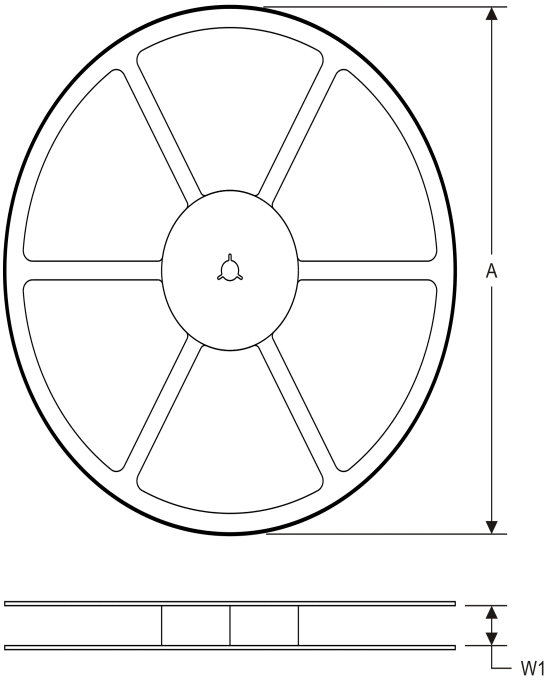

TAPE DIMENSIONS

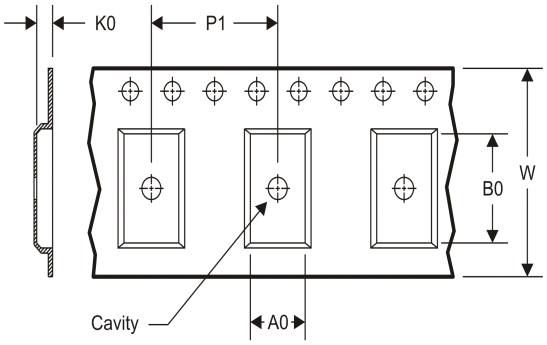

A0	Dimension designed to accommodate the component width
B0	Dimension designed to accommodate the component length
K0	Dimension designed to accommodate the component thickness
W	Overall width of the carrier tape
P1	Pitch between successive cavity centers

TAPE AND REEL INFORMATION

*All dimensions are nominal

Device	Package Type	Package Drawing	Pins	SPQ	Reel Diameter (mm)	Reel Width W1 (mm)	A0 (mm)	B0 (mm)	K0 (mm)	P1 (mm)	W (mm)	Pin1 Quadrant
TLC552CDR	SOIC	D	14	2500	330.0	16.4	6.5	9.0	2.1	8.0	16.0	Q1

TAPE AND REEL BOX DIMENSIONS

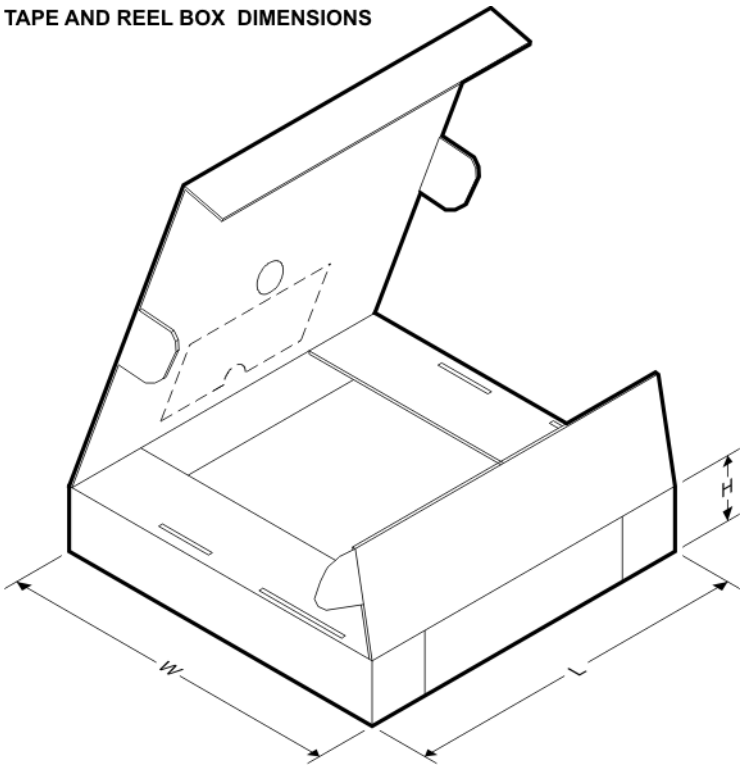

*All dimensions are nominal

Device	Package Type	Package Drawing	Pins	SPQ	Length (mm)	Width (mm)	Height (mm)
TLC552CDR	SOIC	D	14	2500	367.0	367.0	38.0

IMPORTANT NOTICE

Texas Instruments Incorporated and its subsidiaries (TI) reserve the right to make corrections, enhancements, improvements and other changes to its semiconductor products and services per JESD46C and to discontinue any product or service per JESD48B. Buyers should obtain the latest relevant information before placing orders and should verify that such information is current and complete. All semiconductor products (also referred to herein as “components”) are sold subject to TI’s terms and conditions of sale supplied at the time of order acknowledgment.

TI warrants performance of its components to the specifications applicable at the time of sale, in accordance with the warranty in TI’s terms and conditions of sale of semiconductor products. Testing and other quality control techniques are used to the extent TI deems necessary to support this warranty. Except where mandated by applicable law, testing of all parameters of each component is not necessarily performed.

TI assumes no liability for applications assistance or the design of Buyers’ products. Buyers are responsible for their products and applications using TI components. To minimize the risks associated with Buyers’ products and applications, Buyers should provide adequate design and operating safeguards.

TI does not warrant or represent that any license, either express or implied, is granted under any patent right, copyright, mask work right, or other intellectual property right relating to any combination, machine, or process in which TI components or services are used. Information published by TI regarding third-party products or services does not constitute a license to use such products or services or a warranty or endorsement thereof. Use of such information may require a license from a third party under the patents or other intellectual property of the third party, or a license from TI under the patents or other intellectual property of TI.

Reproduction of significant portions of TI information in TI data books or data sheets is permissible only if reproduction is without alteration and is accompanied by all associated warranties, conditions, limitations, and notices. TI is not responsible or liable for such altered documentation. Information of third parties may be subject to additional restrictions.

Resale of TI components or services with statements different from or beyond the parameters stated by TI for that component or service voids all express and any implied warranties for the associated TI component or service and is an unfair and deceptive business practice. TI is not responsible or liable for any such statements.

Buyer acknowledges and agrees that it is solely responsible for compliance with all legal, regulatory and safety-related requirements concerning its products, and any use of TI components in its applications, notwithstanding any applications-related information or support that may be provided by TI. Buyer represents and agrees that it has all the necessary expertise to create and implement safeguards which anticipate dangerous consequences of failures, monitor failures and their consequences, lessen the likelihood of failures that might cause harm and take appropriate remedial actions. Buyer will fully indemnify TI and its representatives against any damages arising out of the use of any TI components in safety-critical applications.

In some cases, TI components may be promoted specifically to facilitate safety-related applications. With such components, TI’s goal is to help enable customers to design and create their own end-product solutions that meet applicable functional safety standards and requirements. Nonetheless, such components are subject to these terms.

No TI components are authorized for use in FDA Class III (or similar life-critical medical equipment) unless authorized officers of the parties have executed a special agreement specifically governing such use.

Only those TI components which TI has specifically designated as military grade or “enhanced plastic” are designed and intended for use in military/aerospace applications or environments. Buyer acknowledges and agrees that any military or aerospace use of TI components which have ***not*** been so designated is solely at the Buyer's risk, and that Buyer is solely responsible for compliance with all legal and regulatory requirements in connection with such use.

TI has specifically designated certain components which meet ISO/TS16949 requirements, mainly for automotive use. Components which have not been so designated are neither designed nor intended for automotive use; and TI will not be responsible for any failure of such components to meet such requirements.

Products		**Applications**	
Audio	www.ti.com/audio	Automotive and Transportation	www.ti.com/automotive
Amplifiers	amplifier.ti.com	Communications and Telecom	www.ti.com/communications
Data Converters	dataconverter.ti.com	Computers and Peripherals	www.ti.com/computers
DLP® Products	www.dlp.com	Consumer Electronics	www.ti.com/consumer-apps
DSP	dsp.ti.com	Energy and Lighting	www.ti.com/energy
Clocks and Timers	www.ti.com/clocks	Industrial	www.ti.com/industrial
Interface	interface.ti.com	Medical	www.ti.com/medical
Logic	logic.ti.com	Security	www.ti.com/security
Power Mgmt	power.ti.com	Space, Avionics and Defense	www.ti.com/space-avionics-defense
Microcontrollers	microcontroller.ti.com	Video and Imaging	www.ti.com/video
RFID	www.ti-rfid.com		
OMAP Mobile Processors	www.ti.com/omap	**TI E2E Community**	e2e.ti.com
Wireless Connectivity	www.ti.com/wirelessconnectivity		

Mailing Address: Texas Instruments, Post Office Box 655303, Dallas, Texas 75265
Copyright © 2012, Texas Instruments Incorporated

ООО «ЛайфЭлектроникс» “LifeElectronics” LLC

ИНН 7805602321 КПП 780501001 Р/С 40702810122510004610 ФАКБ "АБСОЛЮТ БАНК" (ЗАО) в г.Санкт-Петербурге К/С 30101810900000000703 БИК 044030703

Компания «Life Electronics» занимается поставками электронных компонентов импортного и отечественного производства от производителей и со складов крупных дистрибьюторов Европы, Америки и Азии.

С конца 2013 года компания активно расширяет линейку поставок компонентов по направлению коаксиальный кабель, кварцевые генераторы и конденсаторы (керамические, пленочные, электролитические), за счёт заключения дистрибьюторских договоров

Мы предлагаем:

- *Конкурентоспособные цены и скидки постоянным клиентам.*
- *Специальные условия для постоянных клиентов.*
- *Подбор аналогов.*
- *Поставку компонентов в любых объемах, удовлетворяющих вашим потребностям.*

- *Приемлемые сроки поставки, возможна ускоренная поставка.*
- *Доставку товара в любую точку России и стран СНГ.*
- *Комплексную поставку.*
- *Работу по проектам и поставку образцов.*
- *Формирование склада под заказчика.*

- *Сертификаты соответствия на поставляемую продукцию (по желанию клиента).*
- *Тестирование поставляемой продукции.*
- *Поставку компонентов, требующих военную и космическую приемку.*
- *Входной контроль качества.*
- *Наличие сертификата ISO.*

В составе нашей компании организован Конструкторский отдел, призванный помогать разработчикам, и инженерам.

Конструкторский отдел помогает осуществить:

- *Регистрацию проекта у производителя компонентов.*
- *Техническую поддержку проекта.*
- *Защиту от снятия компонента с производства.*
- *Оценку стоимости проекта по компонентам.*
- *Изготовление тестовой платы монтаж и пусконаладочные работы.*

Тел: +7 (812) 336 43 04 (многоканальный)
Email: org@lifeelectronics.ru

www.lifeelectronics.ru