Self-powered Totalizer

New H7E

CSM_H7E_-N_DS_E_7_1

Compact Economical Totalizer with High Visibility Available with Backlit LCD Display

- Large display with 8.6-mm character height.
- Includes new models with backlight for improved visibility in dimly lit places. (Requires 24-VDC power supply.)
- Black and light-gray cases now available.
- PNP/NPN universal DC voltage input types now available.
- Battery is replaceable for Totalizer reuse and conservation of the environment.
- Key-protect switch to prevent faulty reset key operation.
- Dual operation mode.
- Front face compatible with NEMA4/IP66.
- Short body, all models have a depth of 48.5 mm.
- Finger protection terminal block conforms to VDE0106, Part100.
- Conforms to UL, CSA, and CE marking.
  Conforms to EN61010-1 (pollution degree 2/overvoltage category III.)
- Conforms to EMC standards and EN61326, thus allowing use in residential, commercial and light- and heavy-industry environments.
- Six-language instruction manual provided.
- PCB-mounting models available. (Requires 3-V power supply.)

■ Broad Line-up of the New H7E Series

New H7E

New H7EC

Total Counter
8-digit

New H7ET

Time Counter
999999.9h/
3999d23.9h
999h59min59s/
9999h59.9min

New H7ER

Tachometer
1,000 s^{-1} with
1 pulse/rev. encoder
1,000.0 s^{-1} with
10 pulse/rev. encoder
1,000 min^{-1} with
60 pulse/rev. encoder
10,000 min^{-1} with
60 pulse/rev. encoder
1,000.0 min^{-1} with
600 pulse/rev. encoder

New H7E□-N□P

PCB-mounting Counter
Total Counter (8-digit)
Time Counter (999999.9h)

Contents

Self-powered Totalizers

H7EC 2
H7ET 9
H7ER 16
H7E□-N□P 22

Common to All Totalizers

Accessories 27
Precautions 29

Self-powered Total Counter

New H7EC

- Eight-digits, counting range 0 to 99999999.
- Dual input speed: 30 Hz ←→ 1 kHz (except for AC/DC multi-voltage input models)

Model Number Structure

■ Model Number Legend

Note: Some configurations are not available.

H7EC - N □ - □ □
1 2 3

1. Count Input
None: No-voltage input
V: PNP/NPN universal DC voltage input
FV: AC/DC multi-voltage input

2. Case Color
None: Light gray
B: Black

3. Display
None: 7-segment LCD without backlight
H: 7-segment LCD with backlight

Ordering Information

■ Total Counters

Count input	Max. counting speed	Display	Model	
			Light-gray body	Black body
PNP/NPN universal DC voltage input (4.5 to 30 VDC)	30 Hz ←→ 1 kHz (switchable)	7-segment LCD with backlight	H7EC-NV-H	H7EC-NV-BH
		7-segment LCD	H7EC-NV	H7EC-NV-B
AC/DC multi-voltage input (24 to 240 VAC/VDC)	20 Hz	7-segment LCD	H7EC-NFV	H7EC-NFV-B
No-voltage	30 Hz ←→ 1 kHz (switchable)	7-segment LCD	H7EC-N	H7EC-N-B

■ Accessories (Order Separately)

Name	Model
Compact Flush Mounting Bracket	Y92F-35
Flush Mounting Bracket (See note 1)	Y92F-34
Wire-wrap Terminal (set of two Terminals)	Y92S-37
Lithium Battery (See note 2)	Y92S-36
Waterproof Packing (See note 1)	Y92S-32

Note: 1. Provided with H7EC. (Order additional Brackets separately as required.)
2. Built into H7EC. Order replacements using the above model number before the service life expires.

Specifications

■ General

Item	H7EC-NV-□ H7EC-NV-□H	H7EC-NFV-□	H7EC-N-□
Operating mode	Up type		
Mounting method	Flush mounting		
External connections	Screw terminals, optional Wire-wrap Terminals (see note 1)		
Reset	External/Manual reset		
Number of digits	8		
Count input	PNP/NPN universal DC voltage input	AC/DC multi-voltage input	No-voltage input
Display	7-segment LCD with or without backlight, zero suppression (character height: 8.6 mm) (see note 2)		
Max. counting speed	30 Hz/1 kHz	20 Hz	30 Hz/1 kHz
Case color	Light gray or black (-B models)		
Attachment	Waterproof packing, Y92F-34 Flush Mounting Bracket		
Approved standard	UL863, CSA C22.2 No.14, Lloyds Conforms to EN61010-1/IEC61010-1 (Pollution degree2/overvoltage category III) Conforms to VDE0106/P100		

Note: 1. Separately ordered Wire-wrap Terminals (Y92S-37) are required.
2. Only PNP/NPN universal DC voltage input models (-H models) have a backlight.

■ Ratings

Item	H7EC-NV-□ H7EC-NV-□H	H7EC-NFV-□	H7EC-N-□
Supply voltage	Backlight model: 24 VDC (0.3 W max.) (only for backlight) No-backlight model: Not required (powered by built-in battery)	Not required (powered by built-in battery)	
Count input	High (logic) level: 4.5 to 30 VDC Low (logic) level: 0 to 2 VDC (Input impedance: Approx. 4.7 kΩ)	High (logic) level: 24 to 240 VAC/VDC, 50/60 Hz Low (logic) level: 0 to 2.4 VAC/VDC, 50/60 Hz	No voltage input Maximum short-circuit impedance: 10 kΩ max. Short-circuit residual voltage: 0.5 V max. Minimum open impedance: 750 kΩ min.
Reset input		No voltage input Maximum short-circuit impedance: 10 kΩ max. Short-circuit residual voltage: 0.5 V max. Minimum open impedance: 750 kΩ min.	
Max. counting speed (see note)	30 Hz or 1 KHz (Switchable with switch)	20 Hz	30 Hz or 1 KHz (Switchable with switch)
Minimum signal width	20 Hz: 25 ms 30 Hz: 16.7 ms 1 KHz: 0.5 ms		
Reset system	External reset and manual reset: Minimum signal width of 20 ms		
Terminal screw tightening torque	0.98 N·m max.		
Ambient temperature	Operating: –10°C to 55°C (with no condensation or icing) Storage: –25°C to 65°C (with no condensation or icing)		
Ambient humidity	Operating 25% to 85%		

Note: ON/OFF ratio 1:1

■ Characteristics

Item	H7EC-NV-□ H7EC-NV-□H	H7EC-NFV-□	H7EC-N-□
Insulation resistance	100 MΩ min. (at 500 VDC) between current-carrying metal parts and exposed non-current-carrying metal parts, and between the backlight power supply terminal and count input terminals/reset terminals for backlight models	100 MΩ min. (at 500 VDC) between current-carrying metal parts and exposed non-current-carrying metal parts and between count input terminals and reset terminals	100 MΩ min. (at 500 VDC) between current-carrying metal parts and exposed non-current-carrying metal parts
Dielectric strength	1,000 VAC, 50/60 Hz for 1 min between current-carrying metal parts and exposed non-current-carrying metal parts and between the backlight power supply terminal and count input terminals/reset terminals for backlight models	3,700 VAC, 50/60 Hz for 1 min between current-carrying metal parts and exposed non-current-carrying metal parts 2,200 VAC, 50/60 Hz for 1 min between reset terminals and exposed non-current-carrying metal parts and between count input terminals and reset terminals	1,000 VAC, 50/60 Hz for 1 min between current-carrying metal parts and exposed non-current-carrying metal parts
Impulse withstand voltage	4.5 kV between current-carrying terminal and exposed non-current-carrying metal parts	4.5 kV between current-carrying terminal and exposed non-current-carrying metal parts 3 kV between input terminals and reset terminals	4.5 kV between current-carrying terminal and exposed non-current-carrying metal parts
Noise immunity	Square-wave noise generated by noise simulator (pulse width: 100 ns/1 μs, 1-ns rise)		
	±600 V (Between count input terminals/Between reset terminals) ±480 V (Between the backlight power supply terminals for backlight models)	±1.5 kV (Between count input terminals) ±500 V (Between reset terminals)	±500 V (Between count input terminals/Between reset terminals)
Static immunity	±8 kV (malfunction)		
Vibration resistance	Malfunction: 0.15-mm single amplitude at 10 to 55 Hz for 10 min each in 3 directions Destruction: 0.375-mm single amplitude at 10 to 55 Hz for 2 hrs each in 3 directions		
Shock resistance	Malfunction: 200 m/s^2 3 times each in 6 directions Destruction: 300 m/s^2 3 times each in 6 directions		
EMC	(EMI) EN61326 Emission Enclosure: EN55011 Group 1 class B (EMS) EN61326 Immunity ESD: EN61000-4-2: 4 kV contact discharge (level 2) 8 kV air discharge (level 3) Immunity RF-interference from AM Radio Waves: EN61000-4-3: 10 V/m (80 MHz to 1 GHz) (level 3) Immunity RF-interference from Pulse-modulated Radio Waves: EN61000-4-3: 10 V/m (900 MHz ± 5 MHz) (level 3) Immunity Conducted Disturbance: EN61000-4-6: 10 V (0.15 to 80 MHz) (level 3) Immunity Burst: EN61000-4-4: 2 kV power line (level 3) 2 kV I/O signal line (level 4)		
Degree of protection	Front panel: IP66, NEMA4 Terminal block: IP20		
Weight (see note)	No-backlight model: Approx. 60 g Backlight model: Approx. 65 g	Approx. 60 g	Approx. 60 g

Note: Weight includes waterproof packing and flush mounting bracket.

■ Reference Value

Item	Value	Note
Battery life	7 years min. with continuous input at 25°C (lithium battery)	The battery life is calculated according to the conditions in the left column and therefore is not a guaranteed value. Use these value as reference for maintenance or replacement.

Connections

■ Terminal Arrangement

Bottom view: View of the Total Counter rotated horizontally 180°

Backlight Model

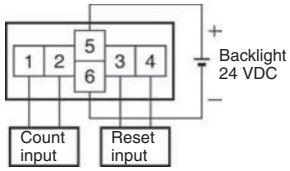

No-backlight Model

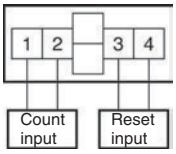

■ Connections

H7EC Total Counter

PNP/NPN Universal DC Voltage Input Model With Backlight

1. Contact Input (Input by a Relay or Switch Contact)

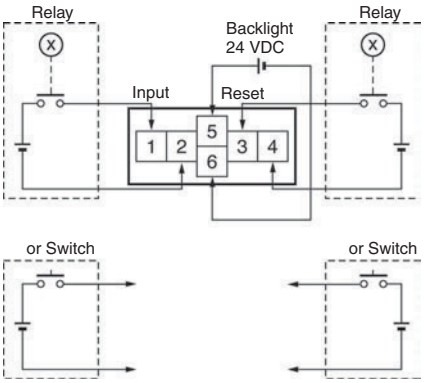

2. Solid-state Input

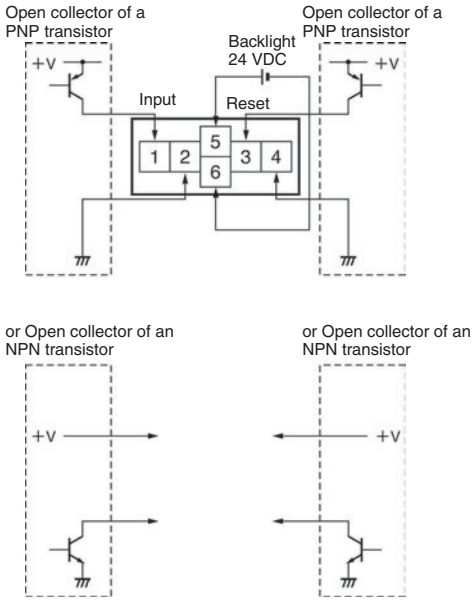

Note: 1. Terminals 2 and 4 (input circuit and reset circuit) are functionally isolated.

2. Select input transistors according to the following:
Dielectric strength of the collector ≥ 50 V
Leakage current < 100 μA

PNP/NPN Universal DC Voltage Input Model Without Backlight

1. Contact Input (Input by a Relay or Switch Contact)

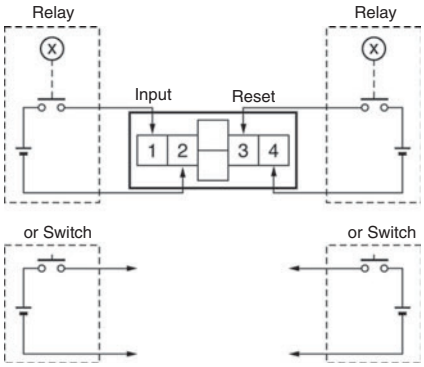

2. Solid-state Input

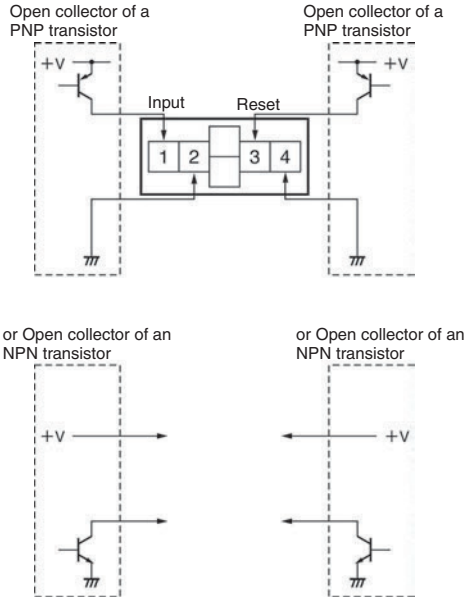

Note: 1. Terminals 2 and 4 (input circuit and reset circuit) are functionally isolated.

2. Select input transistors according to the following:
Dielectric strength of the collector ≥ 50 V
Leakage current < 100 μA

AC/DC Multi-voltage Input Model

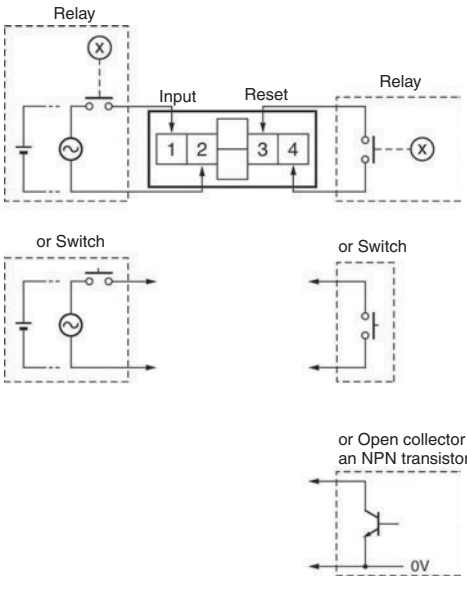

Note: Select input transistors according to the following:
Dielectric strength of the collector ≥ 50 V
Leakage current < 1 μA

No-voltage Input Model

1. Contact Input (Input by a Relay or Switch Contact)

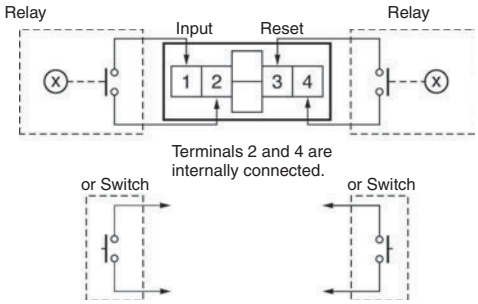

Note: Use Relays and Switches that have high contact reliability because the current flowing from terminals 1 or 3 is small. It is recommended that OMRON's G3TA-IA/ID be used as the SSR.

2. Solid-state Input
(Open Collector Input of an NPN Transistor)

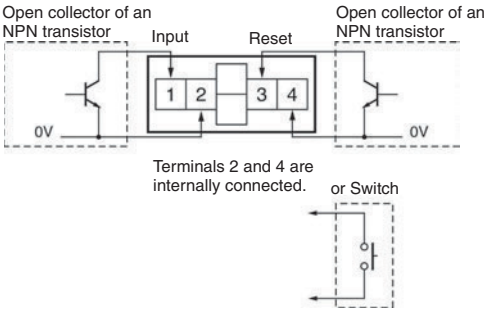

Note: 1. Residual voltage in the output section of Proximity Sensors or Photoelectric Sensors becomes less than 0.5 V because the current flowing from terminals 1 or 3 is small thus allowing easy connection.

2. Select input transistors according to the following:
Dielectric strength of the collector ≥ 50 V
Leakage current < 1 μA

Operation

■ Operating Modes

H7EC Total Counter

Incrementing Operation (Up)

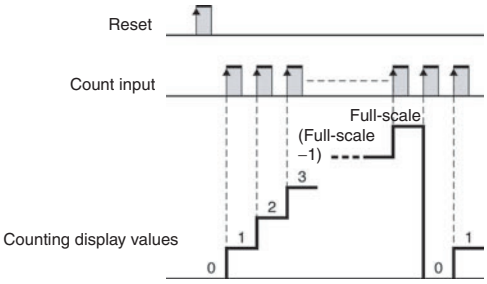

Nomenclature

Front view

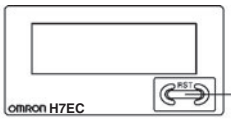

Reset Key

Reset the count value. Not operable under key-protect.

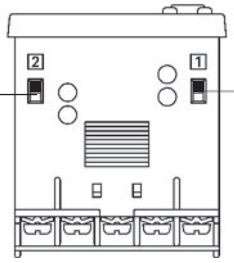

Bottom view

Counting speed switch

For all models except for H7EC-NFV-□. If the counting speed setting is changed, the present value will not be held and so press the Reset Key on the front panel.

Setting (see note)	Counting speed
Front panel Concave side	30 Hz (default setting)
Concave side Terminal block	1 kHz

Key-protect Switch

The Reset Key is not operable while the key-protect switch is set to ON.

Setting (see note)	Key-protect
Front panel Concave side	OFF (default setting)
Concave side Terminal block	ON

Note: Perform switch setting before mounting to a control panel.

Dimensions

Note: All units are in millimeters unless otherwise indicated.

H7EC-N

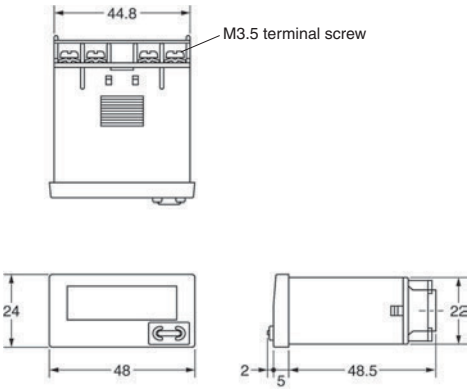

Panel Cutout

Separate mounting

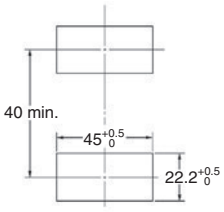

Dense mounting

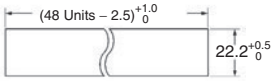

Waterproofing is not possible for dense mounting

Dimensions with Y92F-34 Flush Mounting Bracket

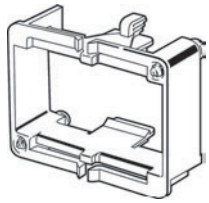

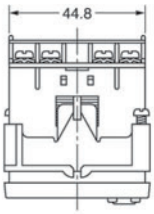

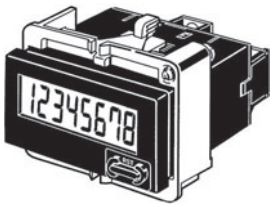

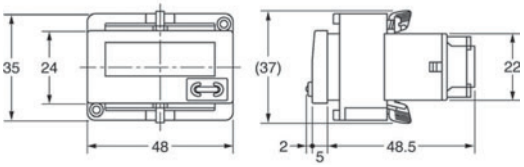

- When mounting, insert the Counter into the cutout, insert the adapter from the back and push in the Counter while making the gap between the front panel and the cutout panel as small as possible. Use screws to secure the Counter. If waterproofing is desired, insert the waterproof packing.
- When several Counters are installed, ensure that the ambient temperature will not exceed specifications.
- The appropriate thickness of the panel is 1 to 5 mm.

Note: A Compact Flush Mounting Bracket (Y92F-35) can also be used. Refer to *Accessories* for details.

Self-powered Time Counter

New H7ET

- Seven digits, time range 0 to 3999d23.9h.
- Dual time range: 999999.9 ←→ 3999d23.9h or 999h59m59s ←→ 9999h59.9m

Model Number Structure

■ Model Number Legend

Note: Some configurations are not available.

H7ET - N □ □ - □ □
1 2 3 4

1. Count Input
None: No-voltage input
V: PNP/NPN universal DC voltage input
FV: AC/DC multi-voltage input

2. Time Range
None: 999999.9h/3999d23.9h
1: 999h59m59s/9999h59.9m

3. Case Color
None: Light gray
B: Black

4. Display
None: 7-segment LCD without backlight
H: 7-segment LCD with backlight

Ordering Information

■ Time Counters

Timer input	Display	Time range			
		999999.9h ←→ 3999d23.9h (switchable)		999h59min59s ←→ 9999h59.9min (switchable)	
		Light-gray body	Black body	Light-gray body	Black body
PNP/NPN universal DC voltage input (4.5 to 30 VDC)	7-segment LCD with backlight	H7ET-NV-H	H7ET-NV-BH	H7ET-NV1-H	H7ET-NV1-BH
	7-segment LCD	H7ET-NV	H7ET-NV-B	H7ET-NV1	H7ET-NV1-B
AC/DC multi-voltage input (24 to 240 VAC/VDC)	7-segment LCD	H7ET-NFV	H7ET-NFV-B	H7ET-NFV1	H7ET-NFV1-B
No-voltage input	7-segment LCD	H7ET-N	H7ET-N-B	H7ET-N1	H7ET-N1-B

■ Accessories (Order Separately)

Name	Model
Compact Flush Mounting Bracket	Y92F-35
Flush Mounting Bracket (See note 1)	Y92F-34
Wire-wrap Terminal (set of two terminals)	Y92S-37
Lithium Battery (See note 2)	Y92S-36
Waterproof Packing (See note 1)	Y92S-32

Note: 1. Provided with H7ET. (Order additional Brackets separately as required.)
2. Built into H7ET. Order replacements using the above model number before the service life expires.

Specifications

■ General

Item	H7ET-NV-□ H7ET-NV-□H	H7ET-NFV-□	H7ET-N-□	H7ET-NV1-□ H7ET-NV1-□H	H7ET-NFV1-□	H7ET-N1-□
Operating mode	Accumulating					
Mounting method	Flush mounting					
External connections	Screw terminals					
Reset	External/Manual reset					
Display	7-segment LCD with or without backlight, zero suppression (character height: 8.6 mm) (see note 1)					
Number of digits	7					
Time range	0.0h to 999999.9h ←→ 0.0h to 3999d23.9h (switchable with switch)			0s to 999h59min59s ←→ 0.0min to 9999h59.9min (switchable with switch)		
Timer input	PNP/NPN universal DC voltage input	AC/DC multi-voltage input	No-voltage input	PNP/NPN universal DC voltage input	AC/DC multi-voltage input	No-voltage input
Case color	Light gray or black (-B models)					
Attachment	Waterproof packing, Y92F-34 Flush Mounting Bracket, time unit labels (see note 2)					
Approved standard	UL863, CSA C22.2 No.14, Lloyds Conforms to EN61010-1/IEC61010-1 (pollution degree2/overvoltage category III) Conforms to VDE0106/P100					

Note: 1. Only PNP/NPN universal DC voltage input models (-H models) have a backlight.
2. “-hours”, “-d-h”, “-h-m”, and “-h-m-s” labels are included.

■ Ratings

Item	H7ET-NV□-□ H7ET-NV□-□H	H7ET-NFV□-□	H7ET-N□-□
Supply voltage	Backlight model: 24 VDC (0.3 W max.) (for backlight) No-backlight model: Not required (powered by built-in battery)	Not required (powered by built-in battery)	
Timer input	High (logic) level: 4.5 to 30 VDC Low (logic) level: 0 to 2 VDC (Input impedance: Approx. 4.7 kΩ)	High (logic) level: 24 to 240 VAC/VDC, 50/60 Hz Low (logic) level: 0 to 2.4 VAC/VDC, 50/60 Hz	No voltage input Maximum short-circuit impedance: 10 kΩ max. Short-circuit residual voltage: 0.5 V max. Minimum open impedance: 750 kΩ min.
Reset input		No voltage input Maximum short-circuit impedance: 10 kΩ max. Short-circuit residual voltage: 0.5 V max. Minimum open impedance: 750 kΩ min.	
Minimum pulse width	1 s		
Reset system	External reset and manual reset: Minimum signal width of 20 ms		
Terminal screw tightening torque	0.98 N·m max.		
Ambient temperature	Operating: –10°C to 55°C (with no condensation or icing) Storage: –25°C to 65°C (with no condensation or icing)		
Ambient humidity	Operating: 25% to 85%		

■ Characteristics

Item	H7ET-NV□-□ H7ET-NV□-H□	H7ET-NFV□-□	H7ET-N□-□
Time accuracy	±100 ppm (25°C)		
Insulation resistance	100 MΩ min. (at 500 VDC) between current-carrying metal parts and exposed non-current-carrying metal parts, and between the backlight power supply and timer input terminals/reset terminals for backlight models	100 MΩ min. (at 500 VDC) between current-carrying metal parts and exposed non-current-carrying metal parts and between timer input terminals and reset terminals	100 MΩ min. (at 500 VDC) between current-carrying metal parts and exposed non-current-carrying metal parts
Dielectric strength	1,000 VAC, 50/60 Hz for 1 min between current-carrying metal parts and exposed non-current-carrying metal parts and between the backlight power supply and timer input terminals/reset terminals for backlight models	3,700 VAC, 50/60 Hz for 1 min between timer input terminals and exposed non-current-carrying metal parts 2,200 VAC, 50/60 Hz for 1 min between reset terminals and exposed non-current-carrying metal parts and between timer input terminals and reset terminals	1,000 VAC, 50/60 Hz for 1 min between current-carrying metal parts and exposed non-current-carrying metal parts
Impulse withstand voltage	4.5 kV between current-carrying terminal and exposed non-current-carrying metal parts	4.5 kV between current-carrying terminal and exposed non-current-carrying metal parts 3 kV between timer input terminals and reset terminals	4.5 kV between current-carrying terminal and exposed non-current-carrying metal parts
Noise immunity	Square-wave noise generated by noise simulator (pulse width: 100 ns/1 μs, 1-ns rise)		
	±600 V (Between timer input terminals/ Between reset terminals) ±480 V (Between the backlight power supply terminals for backlight models)	±1.5 kV (Between timer input terminals) ±500 V (Between reset terminals)	±500 V (Between timer input terminals/ Between reset terminals)
Static immunity	±8 kV (malfunction)		
Vibration resistance	Malfunction: 0.15-mm single amplitude at 10 to 55 Hz for 10 min each in 3 directions Destruction: 0.375-mm single amplitude at 10 to 55 Hz for 2 hrs each in 3 directions		
Shock resistance	Malfunction: 200 m/s² 3 times each in 6 directions Destruction: 300 m/s² 3 times each in 6 directions		
EMC	(EMI) EN61326 Emission Enclosure: EN55011 Group 1 class B (EMS) EN61326 Immunity ESD: EN61000-4-2: 4 kV contact discharge (level 2) 8 kV air discharge (level 3) Immunity RF-interference from AM Radio Waves: EN61000-4-3: 10 V/m (80 MHz to 1 GHz) (level 3) Immunity RF-interference from Pulse-modulated Radio Waves: EN61000-4-3: 10 V/m (900 MHz ± 5 MHz) (level 3) Immunity Conducted Disturbance: EN61000-4-6: 10 V (0.15 to 80 MHz) (level 3) Immunity Burst: EN61000-4-4: 2 kV power line (level 3) 2 kV I/O signal line (level 4)		
Degree of protection	Front panel: IP66, NEMA4 with waterproof packing Terminal block: IP20		
Weight (see note)	No-backlight model: Approx. 60 g Backlight model: Approx. 65 g	Approx. 60 g	Approx. 60 g

Note: Weight includes waterproof packing and flush mounting bracket.

■ Reference Value

Item	Value	Note
Battery life	10 years min. with continuous input at 25°C (lithium battery)	The battery life is calculated according to the conditions in the left column and therefore is not a guaranteed value. Use these value as reference for maintenance or replacement.

Connections

■ Terminal Arrangement

Bottom view: View of the Time Counter rotated horizontally 180°

Backlight Model

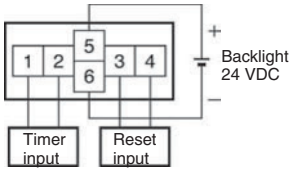

No-backlight Model

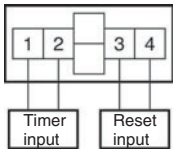

■ Connections

H7ET Time Counter

PNP/NPN Universal DC Voltage Input Model With Backlight

1. Contact Input (Input by a Relay or Switch Contact)

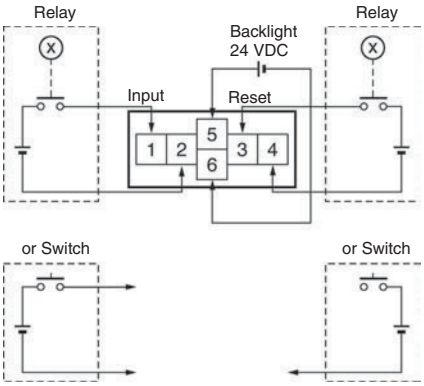

2. Solid-state Input

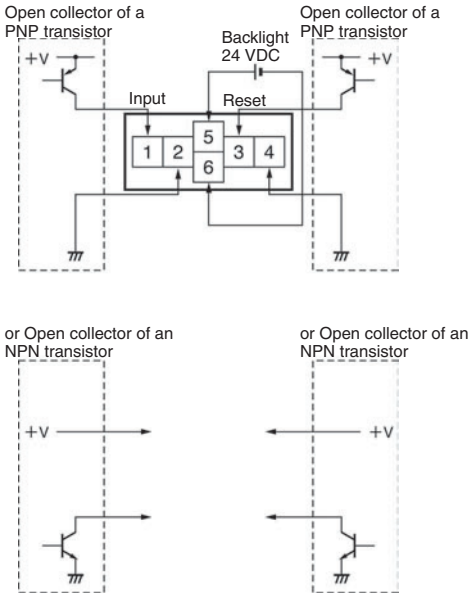

Note: 1. Terminals 2 and 4 (input circuit and reset circuit) are functionally isolated.

2. Select input transistors according to the following:
Dielectric strength of the collector ≥ 50 V
Leakage current < 1 μA

PNP/NPN Universal DC Voltage Input Model Without Backlight

1. Contact Input (Input by a Relay or Switch Contact)

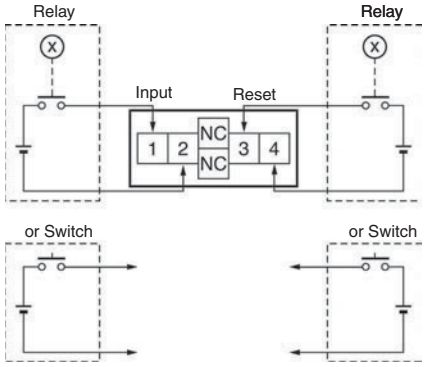

2. Solid-state Input

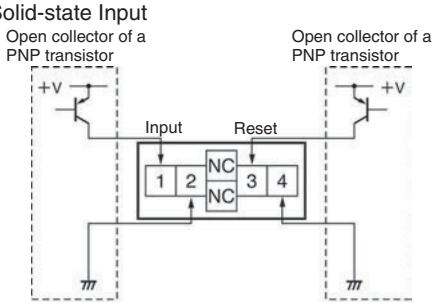

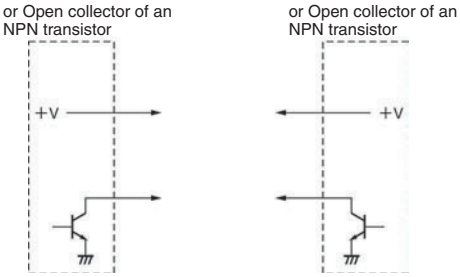

Note: 1. Terminals 2 and 4 (input circuit and reset circuit) are functionally isolated.

2. Select input transistors according to the following:
Dielectric strength of the collector ≥ 50 V
Leakage current < 1 μA

AC/DC Multi-voltage Input Model

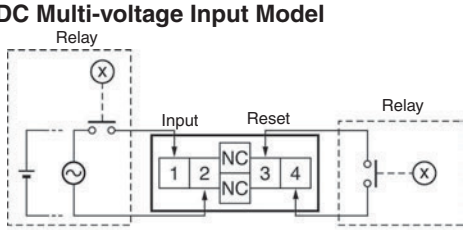

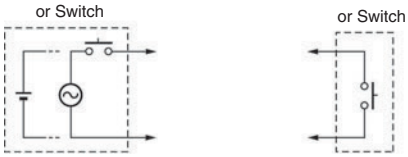

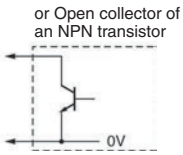

No-voltage Input Model

1. Contact Input (Input by a Relay or Switch Contact)

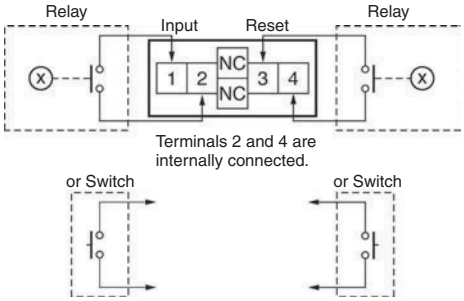

Note: Use Relays and Switches that have high contact reliability because the current flowing from terminals 1 or 3 is as small as approx. 10 μA. It is recommended that OMRON's G3TA-IA/ID be used as the SSR.

2. Solid-state Input
(Open Collector Input of an NPN Transistor)

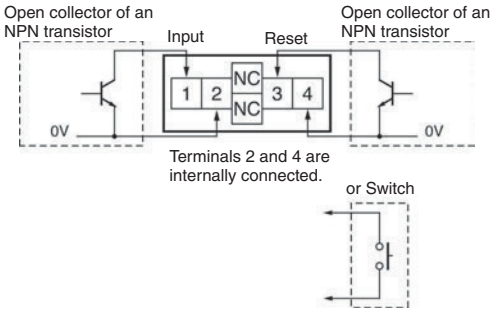

Note: 1. Residual voltage in the output section of Proximity Sensors or Photoelectric Sensors becomes less than 0.5 V because the current flowing from terminals 1 or 3 is as small as approx. 10 μA, thus allowing easy connection.

2. Select input transistors according to the following:
Dielectric strength of the collector ≥ 50 V
Leakage current < 1 μA

Operation

■ Operating Modes

H7ET Time Counter

Incrementing Operation (Up)

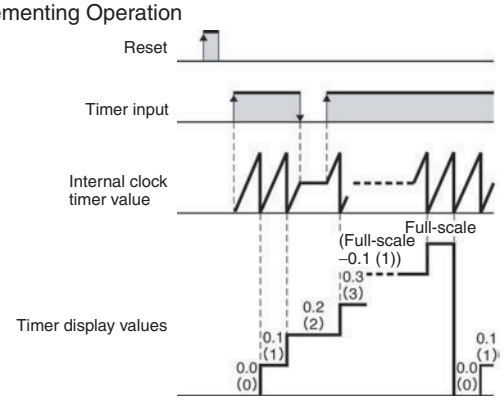

Nomenclature

Front view

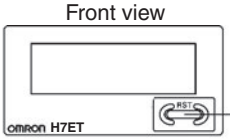

Reset Key

Reset the count value. Not operable under key-protect.

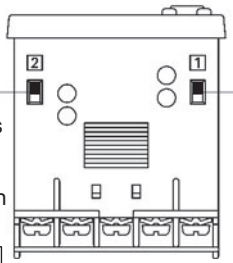

Bottom view

Time-range switch

If the time-range setting is changed, the present value will not be held and so press the Reset Key on the front panel.

Key-protect Switch

The Reset Key is not operable while the key-protect switch is set to ON.

Setting (see note)	Key-protect
Front panel ↑ Concave side	OFF (default setting)
↓ Concave side Terminal block	ON

Setting (see note)	Time range	
	H7ET-N□□-□□	H7ET-N□□1-□□
Front panel ↑ Concave side	0.0h to 3999d23.9h	0s to 999h59min59s (default setting)
↓ Concave side Terminal block	0.0h to 999999.9h (default setting)	0.0min to 9999h59.9min

Note: Perform switch setting before mounting to a control panel.

Dimensions

Note: All units are in millimeters unless otherwise indicated.

H7ET-N

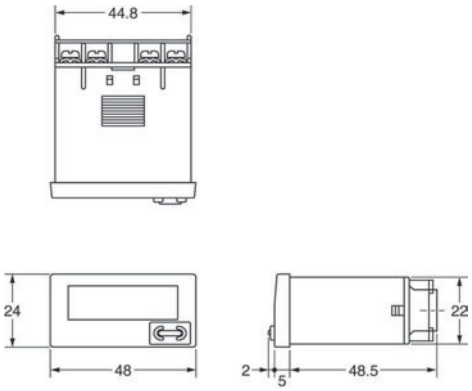

Panel Cutout

Separate mounting

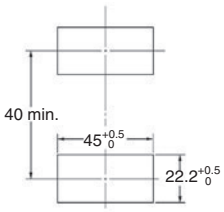

Dense mounting

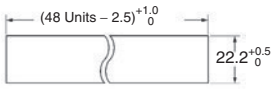

Waterproofing is not possible for dense mounting

Dimensions with Y92F-34 Flush Mounting Bracket

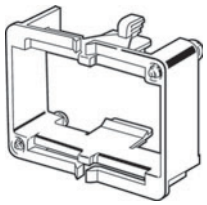

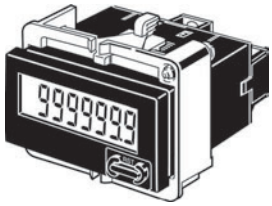

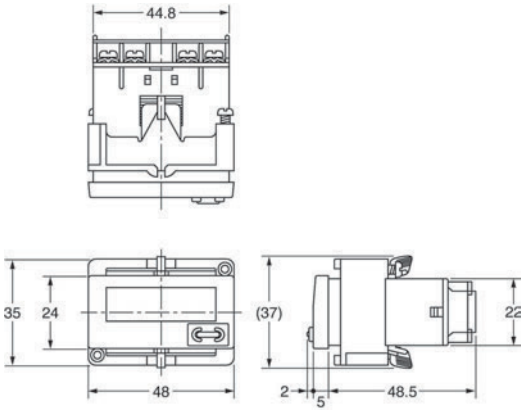

- When mounting, insert the Counter into the cutout, insert the adapter from the back and push in the Counter while making the gap between the front panel and the cutout panel as small as possible. Use screws to secure the Counter. If waterproofing is desired, insert the waterproof packing.
- When several Counters are installed, ensure that the ambient temperature will not exceed specifications.
- The appropriate thickness of the panel is 1 to 5 mm.

Note: A Compact Flush Mounting Bracket (Y92F-35) can also be used. Refer to *Accessories* for details.

Self-powered Tachometer

New H7ER

- Revolutions displayed up to five digits.
- Dual revolution display according to encoder resolution used; 1000 s^{-1}/1000 min^{-1} or 1000.0 s^{-1} /1000.0 min^{-1}
- Switchable dual revolution display type available (-NV1 models); extended up to 10000 min^{-1}

CE UL CSA LR

Model Number Structure

■ Model Number Legend

Note: Some configurations are not available.

H7ER - N □ □ - □ □
1 2 3 4

1. Count Input
None: No-voltage input
V: PNP/NPN universal DC voltage input

2. Number of Digits
None: 4 digits
1: 5 digits

3. Case Color
None: Light gray
B: Black

4. Display
None: 7-segment LCD without backlight
H: 7-segment LCD with backlight

Ordering Information

■ Tachometers

Count input	Display	Max. revolutions displayed (applicable encoder resolution)			
		1000 s^{-1} (1 pulse/rev.), 1000 min^{-1} (60 pulse/rev.)		1000.0 s^{-1} (10 pulse/rev.), 1000.0 min^{-1} (600 pulse/rev.) ←→ 10000 min^{-1} (60 pulse/rev.) (switchable)	
		Light-gray body	Black body	Light-gray body	Black body
PNP/NPN universal DC voltage input (4.5 to 30 VDC)	7-segment LCD with backlight	H7ER-NV-H	H7ER-NV-BH	H7ER-NV1-H	H7ER-NV1-BH
	7-segment LCD	H7ER-NV	H7ER-NV-B	H7ER-NV1	H7ER-NV1-B
No-voltage input	7-segment LCD	H7ER-N	H7ER-N-B	---	---

■ Accessories (Order Separately)

Name	Model
Compact Flush Mounting Bracket	Y92F-35
Flush Mounting Bracket (See note 1)	Y92F-34
Wire-wrap Terminal (set of two terminals)	Y92S-37
Lithium Battery (See note 2)	Y92S-36
Waterproof Packing (See note 1)	Y92S-32

Note: 1. Provided with H7ER. (Order additional Brackets separately as required.)
2. Built into H7ER. Order replacements using the above model number before the service life expires.

Specifications

■ General

Item	H7ER-NV-□ H7ER-NV-□H	H7ER-N-□	H7ER-NV1-□ H7ER-NV1-□H
Operating mode	Up type		
Mounting method	Flush mounting		
External connections	Screw terminals, Wire-wrap Terminals (see note 3)		
Display	7-segment LCD with or without backlight, zero suppression (character height: 8.6 mm) (see note 4)		
Number of digits	4		5
Count input	PNP/NPN universal DC voltage input	No-voltage input	PNP/NPN universal DC voltage input
Max. counting speed	1 kHz		10 kHz
Max. revolutions displayed (see note 5)	1,000 s^{-1} (When encoder resolution of 1 pulse/rev is used.) 1,000 min^{-1} (When encoder resolution of 60 pulse/rev is used.)		1,000.0 s^{-1} (When encoder resolution of 10 pulse/rev is used.) 1,000.0 min^{-1} (When encoder resolution of 600 pulse/rev is used.) ←→ 10,000 min^{-1} (When encoder resolution of 60 pulse/rev is used.) (Switchable with switch)
Attachment	Waterproof packing, Y92F-34 Flush Mounting Bracket, revolution unit labels (see note 5)		
Approved standard	UL863, CSA C22.2 No.14, Lloyds Conforms to EN61010-1/IEC61010-1 (Pollution degree2/overvoltage category III) Conforms to VDE0106/P100		

Note: 1. Reset is not available.
2. When there is no input, the display will be 0.0 or 0.
3. Separately ordered Wire-wrap Terminals (Y92S-37) are required.
4. Only PNP/NPN Universal DC voltage input models have a backlight.
5. “rpm”, “rps”, “s^{-1}” and “min^{-1}” labels are included.

■ Ratings

Item	H7ER-NV□-□ H7ER-NV□-□H	H7ER-N-□
Supply voltage	Backlight model: 24 VDC (0.3 W max.) (for backlight lit) No-backlight model: Not required (powered by built-in battery)	Not required (powered by built-in battery)
Count input	High (logic) level: 4.5 to 30 VDC Low (logic) level: 0 to 2 VDC (Input impedance: Approx. 4.7 kΩ)	No voltage input Maximum short-circuit impedance: 10 kΩ max. Short-circuit residual voltage: 0.5 V max. Minimum open impedance: 750 kΩ min.
Max. counting speed	4-digit models:1 kHz 5-digit models:10 kHz	1 kHz
Minimum signal width	10 kHz: 0.05 ms 1 kHz: 0.5 ms (See note.)	
Terminal screw tightening torque	0.98 N·m max.	
Ambient temperature	Operating: –10°C to 55°C (with no condensation or icing) Storage: –25°C to 65°C (with no condensation or icing)	
Ambient humidity	Operating: 25% to 85%	

Note: 5-digit models :1 kHz/10 kHz switchable.

■ Characteristics

Item	H7ER-NV□-□ H7ER-NV□-□H	H7ER-N-□
Insulation resistance	100 MΩ min. (at 500 VDC) between current-carrying metal parts and exposed non-current-carrying metal parts, and between the backlight power supply and count input terminals/reset terminals for backlight models	100 MΩ min. (at 500 VDC) between current-carrying metal parts and exposed non-current-carrying metal parts
Dielectric strength	1,000 VAC, 50/60 Hz for 1 min between current-carrying metal parts and exposed non-current-carrying metal parts and between the backlight power supply and count input terminals/reset terminals for backlight models	1,000 VAC, 50/60 Hz for 1 min between current-carrying metal parts and exposed non-current-carrying metal parts
Impulse withstand voltage	4.5 kV between current-carrying terminal and exposed non-current-carrying metal parts	
Noise immunity	Square-wave noise generated by noise simulator (pulse width: 100 ns/1 μs, 1-ns rise)	
	±600 V (Between count input terminals) ±480 V (Between the backlight power supply terminals for backlight models)	±500 V (Between count input terminals)
Static immunity	±8 kV (malfunction)	
Vibration resistance	Malfunction: 0.15-mm single amplitude at 10 to 55 Hz for 10 min each in 3 directions Destruction: 0.375-mm single amplitude at 10 to 55 Hz for 2 hrs each in 3 directions	
Shock resistance	Malfunction: 200 m/s^2 3 times each in 6 directions Destruction: 300 m/s^2 3 times each in 6 directions	
EMC	(EMI) EN61326 Emission Enclosure: EN55011 Group 1 class B (EMS) EN61326 Immunity ESD: EN61000-4-2: 4 kV contact discharge (level 2) 8 kV air discharge (level 3) Immunity RF-interference from AM Radio Waves: EN61000-4-3: 10 V/m (80 MHz to 1 GHz) (level 3) Immunity RF-interference from Pulse-modulated Radio Waves: EN61000-4-3: 10 V/m (900 MHz ± 5 MHz) (level 3) Immunity Conducted Disturbance: EN61000-4-6: 10 V (0.15 to 80 MHz) (level 3) Immunity Burst: EN61000-4-4: 2 kV power line (level 3) 2 kV I/O signal line (level 4)	
Degree of protection	Front panel: IP66, NEMA4 with waterproof packing Terminal block: IP20	
Weight (see note)	No-backlight model: Approx. 60 g Backlight model: Approx. 65 g	

Note: Weight includes waterproof packing and flush mounting bracket.

■ Reference Value

Item	Value	Note
Battery life	7 years min. with continuous input at 25°C (lithium battery)	The battery life is calculated according to the conditions in the left column and therefore is not a guaranteed value. Use these value as reference for maintenance or replacement.

Connections

■ Terminal Arrangement

Bottom view: View of the Tachometer rotated horizontally 180°

Backlight Model

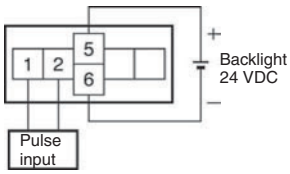

No-backlight Model

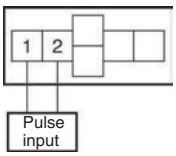

■ Connections

H7ER Tachometer

Note: Select input transistors according to the following:
Dielectric strength of the collector ≥ 50 V
Leakage current < 100 μA (1 μA for no-voltage input model)

PNP/NPN Universal DC Voltage Input Models With Backlight
Transistor Input

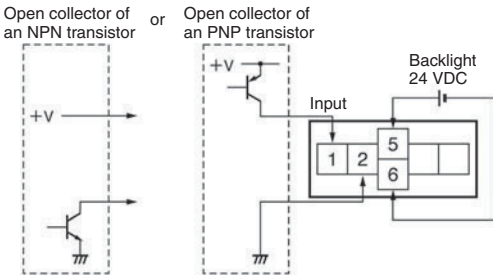

No-voltage Input Model
Transistor Input (Open Collector of an NPN Transistor)

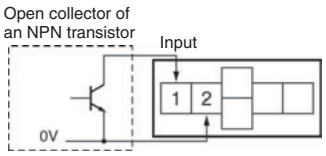

PNP/NPN Universal DC Voltage Input Models Without Backlight
Transistor Input

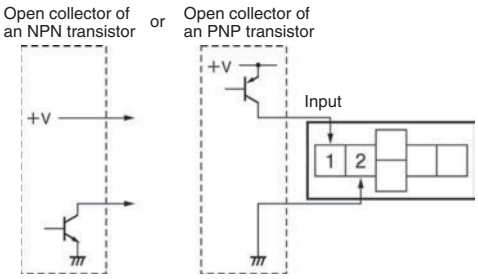

Operation

■ Operating Modes

H7ER Tachometer

Incrementing Operation
Within Unit Time (Up)

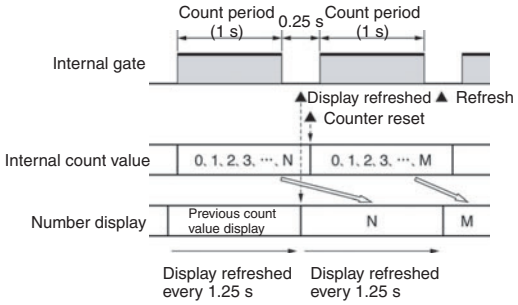

Nomenclature

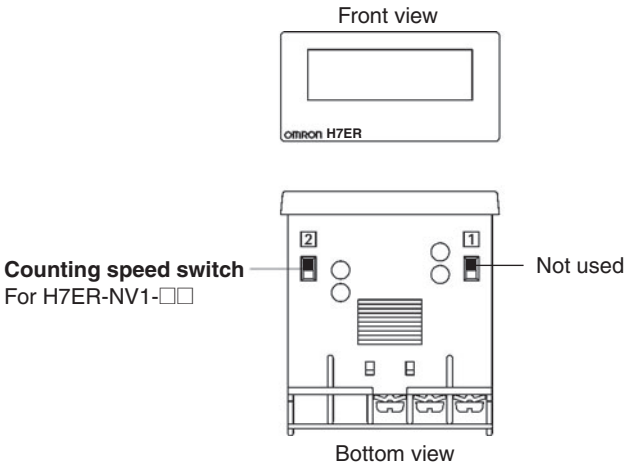

Counting Speed Switch Settings and Unit Label Application

Model	Counting speed switch setting (see note)	Max. revolutions displayed	Applicable encoder resolution	Applicable unit label
H7ER-NV1-□□	Front panel 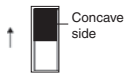 Concave side	10000 min^{-1} (default setting)	60 pulse/rev.	"min^{-1}" or "rpm"
	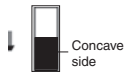 Concave side Terminal block	1000.0 min^{-1}	600 pulse/rev.	"min^{-1}" or "rpm"
		1000.0 s^{-1}	10 pulse/rev.	"s^{-1}" or "rps"
H7ER-N-□ **H7ER-NV-□□**	No setting is required	1000 min^{-1}	60 pulse/rev.	"min^{-1}" or "rpm"
		1000 s^{-1}	1 pulse/rev.	"s^{-1}" or "rps"

Note: Perform switch setting before mounting to a control panel.

Dimensions

Note: All units are in millimeters unless otherwise indicated.

H7ER-N

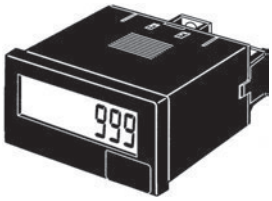

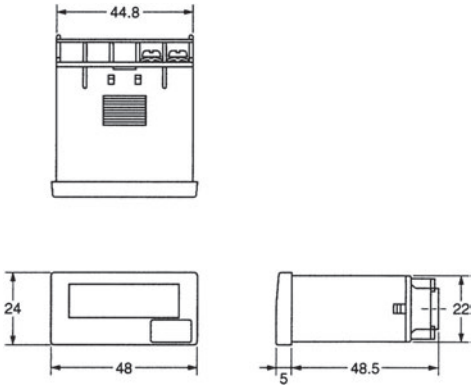

Panel Cutout

Separate mounting

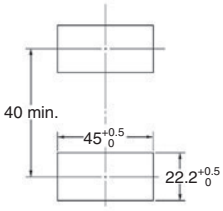

Dense mounting

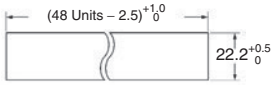

Waterproofing is not possible for dense mounting

Dimensions with Y92F-34 Flush Mounting Bracket

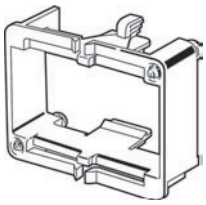

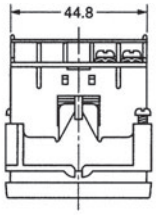

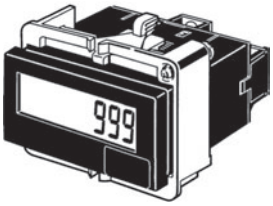

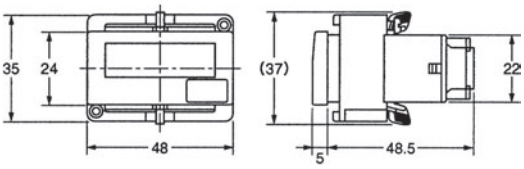

- When mounting, insert the Counter into the cutout, insert the adapter from the back and push in the Counter while making the gap between the front panel and the cutout panel as small as possible. Use screws to secure the Counter. If waterproofing is desired, insert the waterproof packing.
- When several Counters are installed, ensure that the ambient temperature will not exceed specifications.
- The appropriate thickness of the panel is 1 to 5 mm.

Note: A Compact Flush Mounting Bracket (Y92F-35) can also be used. Refer to *Accessories* for details.

PCB-mounting Counters

H7E□-N□P

- Dedicated for use on PCB.
- Total Counters and Time Counter available.

Model Number Structure

■ Model Number Legend

H7E □ - N □ P
1 2

1. Function
C: Total Counter
T: Time Counter

2. Max. Counting Speed for H7EC Models
None: 1 kHz
L: 30 Hz

Ordering Information

■ PC Board-use Counters

Count input	Display	Total counter		Time counter
		Max. counting speed		
		1 kHz	30 Hz	
No-voltage input	7-segment LCD	H7EC-NP	H7EC-NLP	H7ET-NP

■ Accessory (Order Separately)

Connecting Socket (28-pin)	XR2A-2801-N

Specifications

■ General

Item	Total Counter		Time Counter
	H7EC-NP	H7EC-NLP	H7ET-NP
Operating mode	Up type		
Mounting method	Direct mounting on PC Board or mounting on 28-pin socket		
Reset	External reset, Power-OFF reset		
Number of digits	8		7
Time range	---		0.0h to 999999.9h
Max. counting speed	1 kHz	30 Hz	---
Count/Timer input	No-voltage input		
Display	7-segment LCD (character height: 8.6 mm)		
Case color	Transparent		
Approved standard	UL863, CSA C22.2 No.14		

■ Ratings

Item	H7EC-NP H7EC-NLP	H7ET-NP
Supply voltage	3 VDC (2.7 to 3.3 VDC)	
Count/Timer input	No voltage input Maximum short-circuit impedance: 10 kΩ max. Short-circuit residual voltage: 0.5 V max. Minimum open impedance: 750 kΩ min.	
Reset input		
Max. counting speed (see note)	1 kHz: Minimum signal width of 0.5 ms 30 Hz: Minimum signal width of 16.7 ms	---
Minimum signal input width	---	1 s
Reset system	External reset: Minimum signal width of 20 ms Power-OFF reset: Minimum power OFF time of 500 ms	
Ambient temperature	Operating: –10°C to 55°C (with no condensation or icing) Storage: –25°C to 65°C (with no condensation or icing)	
Ambient humidity	Operating: 25% to 85%	

Note: ON/OFF ratio 1:1

■ Characteristics

Item	H7EC-NP H7EC-NLP	H7ET-NP
Time accuracy	---	±100 ppm (25°C)
Noise immunity	Square-wave noise generated by noise simulator (pulse width: 100 ns/1 μs, 1-ns rise) ±500 V (Between count or timer input terminals/Between reset terminals)	
Static immunity	±8 kV (malfunction)	
Vibration resistance	Malfunction:0.15-mm single amplitude at 10 to 55 Hz for 10 min each in 3 directions Destruction:0.375-mm single amplitude at 10 to 55 Hz for 2 hrs each in 3 directions	
Shock resistance	Malfunction:200 m/s^2 3 times each in 6 directions Destruction:300 m/s^2 3 times each in 6 directions	
EMC	(EMI) EN61326 Emission Enclosure: EN55011 Group 1 class B (EMS) EN61326 Immunity ESD: EN61000-4-2: 4-kV contact discharge (level 2) 8-kV air discharge (level 3) Immunity RF-interference from AM Radio Waves: EN61000-4-3: 10 V/m (80 MHz to 1 GHz) (level 3) Immunity RF-interference from Pulse-modulated Radio Waves: EN61000-4-3: 10 V/m (900 MHz ± 5 MHz) (level 3) Immunity Conducted Disturbance (see note): EN61000-4-6: 10 V (0.15 to 80 MHz) (level 3) Immunity Burst (see note): EN61000-4-4: 2-kV I/O signal line (level 4)	
Weight	Approx. 20 g	

Note: The power supply terminals of the H7E□-N□P are considered as 3-VDC control terminals.

Connections

■ Terminal Arrangement

H7EC-N□P

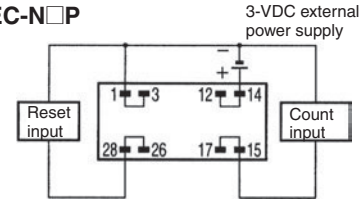

H7ET-NP

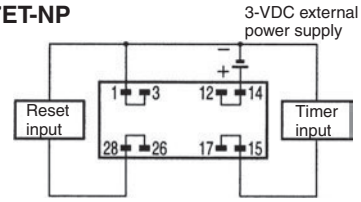

■ Connections

Power Supply and Battery Connections

Battery Connections

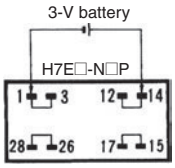

When designing a circuit, keep the power wiring connections shorter than 50 mm. Refer to the connection diagram above for the proper wiring polarity.

The life expectancy of a battery power supply can be calculated by the following formula:

$t = A/I_c$

Where,
t: Life expectancy of battery (h)
A: Battery capacity (mAh)
I_c: H7E□-N□P current consumption (mA)

Example:
Battery life when using a 3-V lithium battery with a capacity of 1,200 mAh for the H7E□-N□P.

$t = 1{,}200\ [mAh]/20 \times 10^{-3}\ [mA] = 60{,}000$ hours (approx. 6.8 years)

The battery capacity varies depending on the type of battery used; oxidized silver, mercury, or lithium battery.

Voltage Division of Power Supply Circuit

When necessary, the voltage from the battery may be divided by resistances:

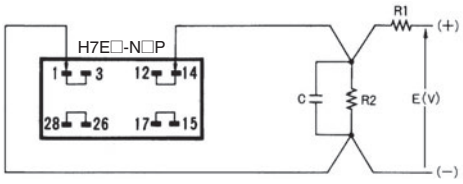

When doing so, however, ensure that the following equation balances:

$E\ (V) \times R_2 / (R_1 + R_2) = 3\ V$

R	E		
	5 V	12 V	24 V
R_1	2 kΩ	9.1 kΩ	33 kΩ
R_2	3 kΩ	3 kΩ	4.7 kΩ

Allow a current high enough to flow through R_1 so that the H7E□-N□P receives sufficient current.

C is a film capacitor, of about 0.1 μF, and is intended to absorb noise induced by the power lines.

Keep the wiring between the H7E□-N□P and R_2 or C as short as possible (within 50 mm).

Backup Circuit for Protection Against Power Failure

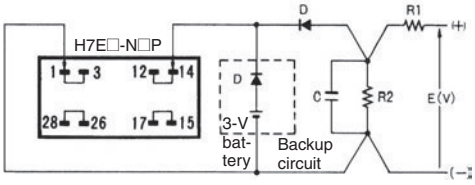

Use a diode (D) having a forward voltage as small as possible (0.1 V max. at I_F of 20 μA).

Determine the ratio of R_1 to R_2 in accordance with the forward voltage of the diode to be used. Be aware that when the power supplied to the H7E□-N□P has dropped to less than the voltage of the backup circuit, the battery will discharge.

To protect the circuit against a momentary power failure, an aluminum electrolyte capacitor can be used in place of a battery, as shown below:

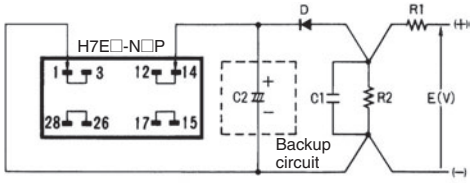

When a capacitor is used, its backup time can be calculated by the following formula:

$t = C\ (V_1 - V_2) / I_c$

Where,
t: Backup time (s)
C: Capacitance (μF)
V_1: Supply voltage before power failure (V)
V_2: Minimum operating voltage of H7E□-N□P (V)
I_c: H7E□-N□P current consumption (μA)

Example:
Backup time by an aluminum electrolytic capacitor of 100 μF. (Minimum operating voltage of H7E□-N□P is 2.6 V.)

$t = 100\ \mu F \times (3–2.6\ V)/20\ \mu A = 100 \times 0.40/20 = 2.0$ seconds

Note that the above calculation provides an approximate value, which varies depending on the environment under which the Counter is used and also on the type of capacitors used. Provide some allowance in selecting capacitors.

Keep the wiring between the H7E□-N□P and R_2 or C as short as possible (within 50 mm).

Input Connections

Input Connection Contact Input

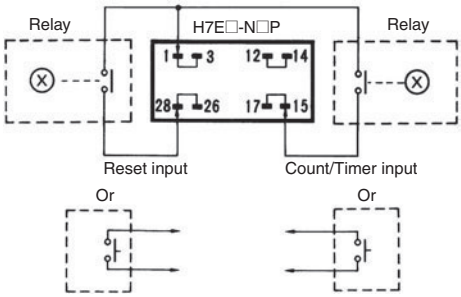

When the H7EC-NP is used, relay chattering may be counted. Use the H7EC-NLP, one of the low-speed input models.

Solid State Input

Open-collector Transistor Input

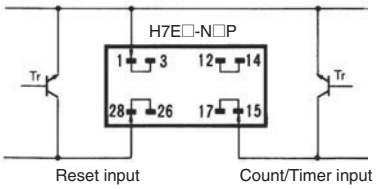

TTL or C-MOS IC Input

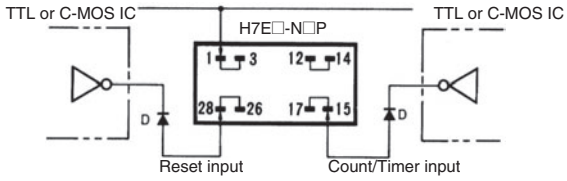

Use a transistor for input that satisfies the following conditions:
Collector breakdown voltage ≥ 50 V
Leakage current < 1 μA
Use a diode (D) having a forward voltage as small as possible (0.1 V max. at I_F of 20 μA).

Operation

■ Operating Modes

H7EC Total Counter

Incrementing Operation (Up)

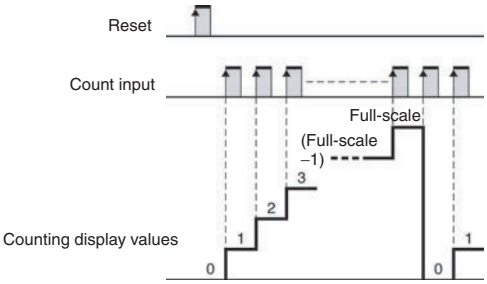

H7ET Time Counter

Incrementing Operation (Up)

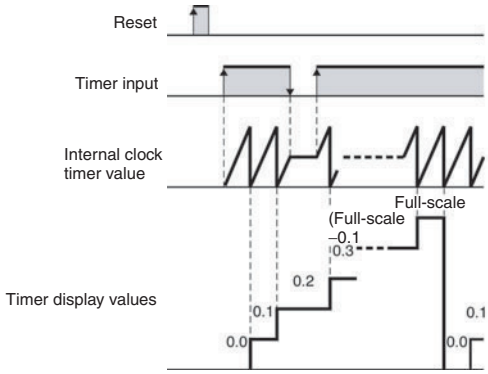

Dimensions

Note: All units are in millimeters unless otherwise indicated.

H7EC-N□P

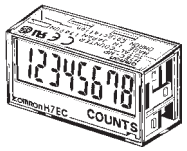

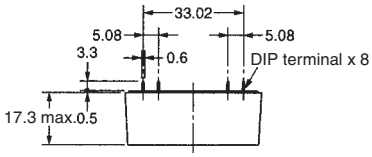

H7ET-NP

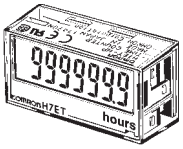

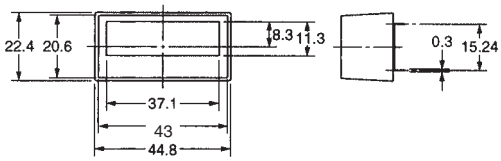

DIP Terminal

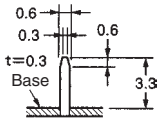

PCB Processing Dimensions (Soldering Surface)

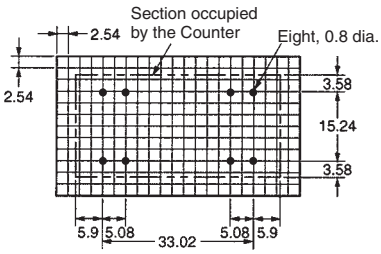

Note: Processing dimensions are for 28-pin IC socket.

Accessories (Order Separately) (Common)

■ New H7E (Except for PCB-mounting Counter)

The New H7E models are supplied with a mounting bracket (Y92F-34) and nut. Additionally, the Y92F-75/-76/-77B Flush Mounting Adapters shown here allow the New H7E models to be fitted to existing panel cutouts.

Y92F-35 Compact Flush Mounting Bracket

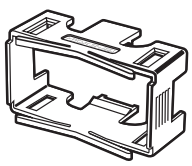

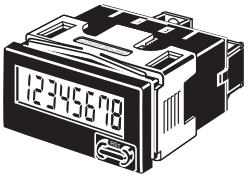

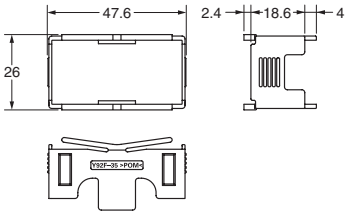

Panel Cutout

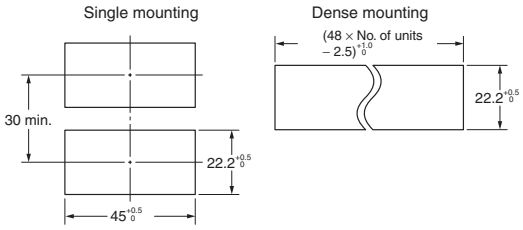

Degree of protection (front): IP40 (not waterproof)
The DIP switch of the H7E□-N can be operated in mounted condition. Vibration resistance and shock resistant are the same level as the H7E□-N series.

- The minimum mounting interval is 30 mm.
  Note: An interval of 40 mm is recommended for easier wiring.
- Do not allow the ambient temperature of the H7E□-N to exceed the specifications (55°C).
- Mounting is possible onto panels with a thickness of 1 to 5 mm.

Y92F-75 Flush Mounting Adapter for 26 × 45.3 Rectangular Cutout

Use mounting bracket supplied with the Counter

(Color: light gray)

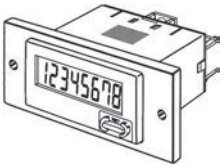

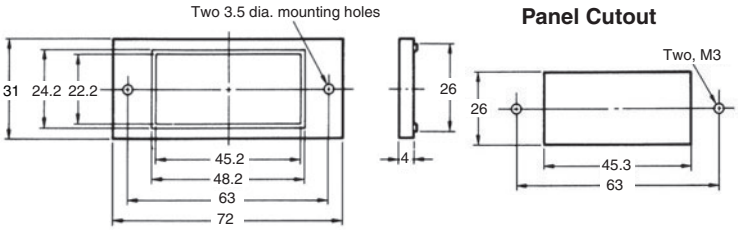

Y92F-76 Flush Mounting Adapter for 27.5 × 52.5 Rectangular Cutout

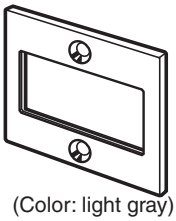

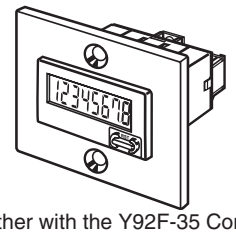

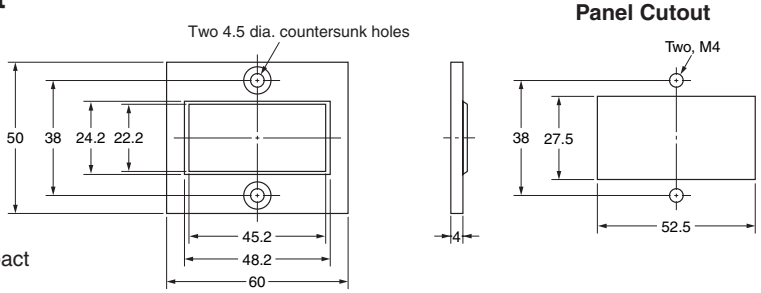

(Color: light gray)
Use the Y92F-76 together with the Y92F-35 Compact Flush Mounting Bracket.
Do not use the Flush Mounting Adapter supplied with the Counter.

Y92F-77B Flush Mounting Adapter for 24.8 × 48.8 Rectangular Cutout

Use mounting bracket supplied with the Counter

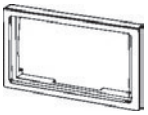

(Color: light gray)

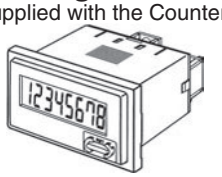

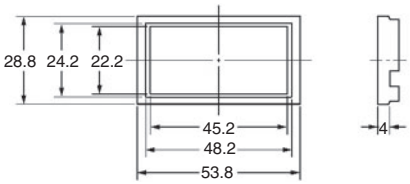

Panel cutout

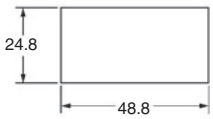

Note: The mounting panel thickness should be between 1 and 5 mm.

Y92S-37 Wire-wrap Terminal (Set of Two Terminals)

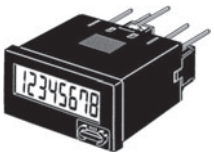

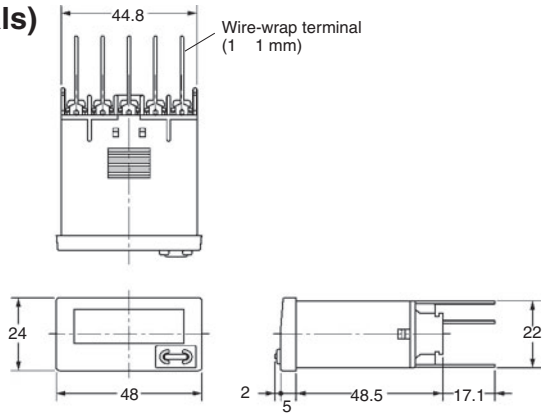

When using the Wire-wrap Terminal, be sure to use the correct wires and peripheral devices. (The correct wires, bits and sleeves are shown in the table on the right.)

Wire	Bit	Sleeve	Wrapped state
AWG22	2-A	2-B	Normal
AWG24	1-A	1-B	Normal
AWG26	3-A	1-B	Normal

Y92S-36 Lithium Battery (3 V)

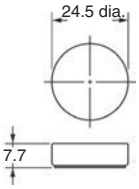

Precautions (Common)

Refer to *Safety Precautions for All Counters*.

■ New H7E (Except for PCB-mounting Counter)

⚠ WARNING

This product has a built-in lithium battery. Do not short-circuit the + and – terminals, charge, disassemble, deform, or expose the battery to fire. The battery may explode (break), catch fire, or cause liquid leakage.

Do not use any battery other than the specified one (Y92S-36). Using another battery may cause liquid leakage or breakage, resulting in malfunction or injury.

⚠ CAUTION

If a voltage other than the rated one is applied, internal elements may be damaged.
Do not use the Counter in the following places:
- Locations subject to direct sunlight.
- Locations subject to corrosive gases.
- Locations subject to dust.

Before Use

- An insulation sheet has been inserted to maintain the quality of the Totalizer in the event of a long period without use. Be sure to remove this sheet before attempting to use the product.

  Remove the insulation sheet and press the Reset Key on the front panel of the Counter. (With the H7ER-N,-NV(-H),-NV1(-H), models, “0” or “0.0” will be displayed after 1 s.)

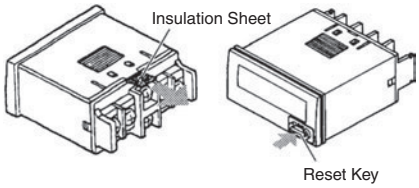

- Switch settings on the Counter must be performed before mounting it to a control panel.
- Do not use the Counter in the following locations:
  - Locations subject to severe changes in temperature.
  - Locations subject to condensation as the result of high humidity.

Mounting Precautions for Flush Mounting

Although the operating section is watertight (conforming to NEMA4, IP66), rubber packing is provided to avoid water leakage through the gap between the Counter and panel cutout. Unless this rubber packing is tightly squeezed on, water may permeate inside the panel. Therefore, be sure to tighten the screws for fixing the Y92F-34 Flush Mounting Bracket. (Excessive tightening may also deform the rubber packing.)

Screw for the Flush Mounting Bracket

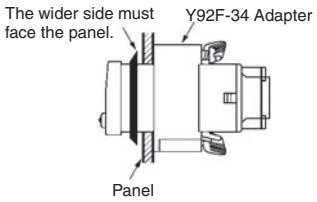

Reset Input and Count/Timer Input

- The H7E operates using its built-in Battery. If the H7E is connected to a device that has +V and OUT terminals that are connected with a diode as shown in the circuit diagram, the circuit indicated by the arrow 1 or 2 will be formed when the device is turned OFF. As a result, the H7E may be reset or count by one. It is recommended that such devices not be connected to the H7E.

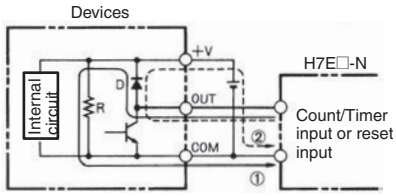

- If an excessive voltage is applied to the count/timer input or reset input terminals, the internal elements may be damaged.
  Ensure that the following voltages are not exceeded:
  - PNP/NPN universal voltage input model: 30 VDC
  - AC/DC voltage input model:
    At count/timer input: 240 VAC (peak voltage: 338V)
    240 VDC
    At reset input: No voltage can be applied. (No-voltage input)
  - No-voltage input model: No voltage can be applied.
- Avoid wiring close to high-tension or large-current lines.
- Do not remove the outer case when voltage is being applied to the power supply terminals or the input terminals.
- The input for the H7E□-NFV-□ is a high-impedance circuit and so influence from an induced voltage may result in malfunction. Therefore, when the input signal wiring is longer than 10 m (line capacitance of 120 pF/m, at room temperature), it is recommended that a CR filter or a bleeder resistor is connected.

Count Input, Timer Input or Reset Input to More than One H7E Counter at a Time

• PNP/NPN Universal DC Voltage Input

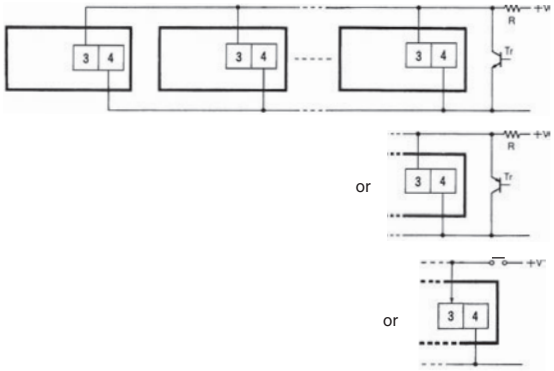

Note: H (Reset ON) level must be 4.5 V minimum.

$$H = \frac{4.7\ (k\Omega)/N + V}{4.7\ (k\Omega)/N + R}$$

• No-voltage Input

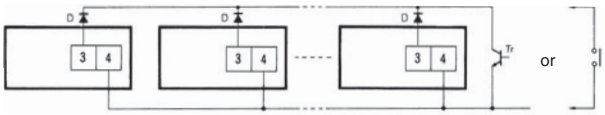

Note: 1. The leakage current of the transistor used for input must be less than 1 μA.

2. The forward voltage of the diode must be as low as possible (i.e., 0.1 V maximum with an I_F of 20 μA) so that the voltage between terminals 3 and 4 will be 0.5 V when the reset input is ON.

Input and Power Supply

No-voltage Input Models

• Do not impose voltage on the Counter if the Counter is a model that operates with no-voltage input, otherwise the internal circuit of the Counter may be damaged.
Do not connect any single input signal in parallel to Counter models operating with no-voltage input and those operating with voltage input, otherwise the Counters may malfunction.

• When connecting a sensor to the Counter that operates with no-voltage input, make sure that the sensor has open collector output.

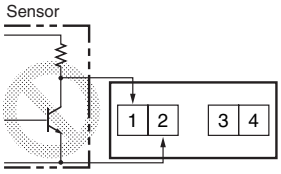

• When connecting an open collector input from a transistor to the Counter that operates with no-voltage input, make sure that the leakage current of the transistor is 1 μA maximum.

No-voltage Input and PNP/NPN Universal DC Voltage Input Models

• The operation of the Counter may be affected if the capacitance of input lines exceeds 500 pF (about 10 m, with parallel wires of 2 x 2 mm).
Keep all wires as short as possible. When using shielded wire, line capacitance may occur.

AC/DC Multi-voltage Input Models

• When connecting count/timer input from an SSR to the Counter that operates with AC/DC voltage input, use OMRON's G3TA-IA/ID SSR (for DC) whose leakage current is 0.1 mA max. or connect a bleeder resistor in parallel to the input circuit of the Counter.

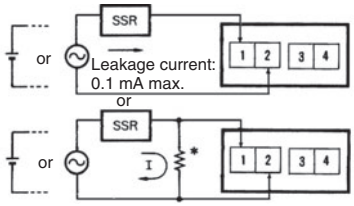

*Bleeder resistor
The voltage between terminals 1 and 2 must be 1.5 V maximum when the SSR is OFF.

Backlight Power Supply

• To reduce variation in the brightness of the backlight when using more than one H7E with a backlight, use the same power supply for all the backlights.

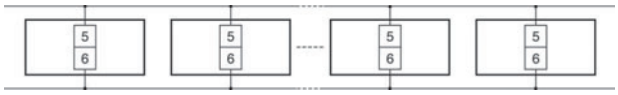

• When connecting the DC power supply for the backlights, be sure to connect the polarities correctly.

Input Verification with the H7ET Time Counter

(When the time range is not set to 0s to 999h59min59s)

The decimal point of the LCD blinks every other second while an input signal is being applied. If the decimal point is not blinking, the input signal is not being received correctly. Check the input signal connections.

Unit Label for Time Counter and Tachometer

A unit label has been packed with the Counter. Use in accordance with the application.

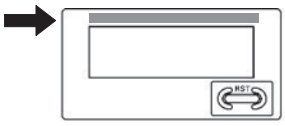

Battery Replacement

Remove the wiring when replacing the Battery. Do not come in contact with any item to which high voltage is being applied. Doing so may result in electric shock.

Before changing the Battery, the person should ensure that they are not carrying any static electric charge.

Procedure for replacing the Battery (refer to the diagrams below):

1. Using the tool, pry open the lift-tab on the case. (1)
2. Pull the body out of its outer case. (2)
3. Lift the Battery up by the edge and remove it. (3)
When removing the Battery, do not come in contact with the display area or any internal parts.
4. Wipe the back of the new Battery before inserting it.
5. Ensure that the + and – terminals are correctly oriented.
6. After replacing the Battery, re-insert the body into its case. (4)
Check that the case is securely held in by the lift-tab.

7. Press the Reset Key before use (not necessary for H7ER-N,-NV,-NV1). (5)

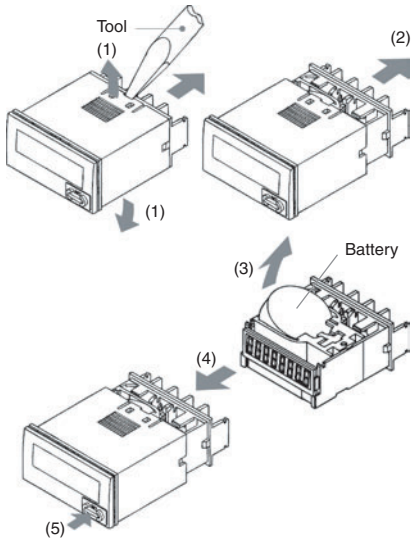

EN/IEC Standards

The count or timer input, reset input, and backlight power supply terminals of the no-voltage input or PNP/NPN universal DC voltage input models (H7E□-N,-N1, H7E□-NV(-H),-NV1(-H)) are not isolated.

A SELV power supply conforming to Appendix H of IEC61010-1 should be used for the count or timer input, reset input and backlight power supply terminals. A SELV power supply is a power supply for which the input and output have double or reinforced insulation, and for which the output voltage is 30 Vrms with 42.4 V peak or 60 VDC max. (Only the H7E□-NV□-H has a backlight.)

The terminals for count or timer input and reset input for AC/DC multi-voltage input models have basic insulation.

Connect the reset input terminals to a device that does not have exposed current-carrying parts and has basic insulation for 240 VAC.

Others

If the indicator keeps flickering or is OFF, the internal battery may be close to the end of its service life. In such a case, it is suggested that the battery be replaced.

■ PCB-mounting Counter

Power Supply

- Use the power supply within the applicable range indicated by the following waveform, while considering the ripple and voltage fluctuations of the circuit power source.

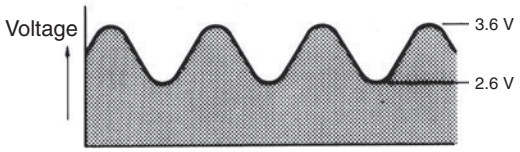

- The H7E□-N□P changes its mode as shown below depending on the applied supply voltage.

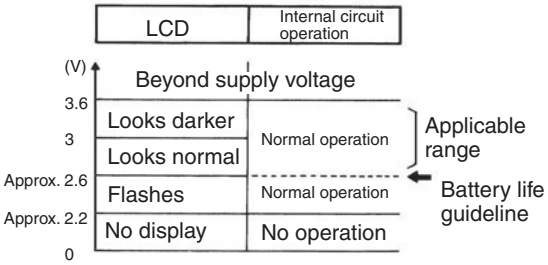

Battery Replacement

To prevent unwanted reset when replacing the battery, connect the new battery before disconnecting the old one. Otherwise, the voltage supplied to the counter circuit drops, causing the present count value to reset.

When designing the circuit board, providing two extra terminals for battery connection will make the switch must simpler. See the schematic diagram below:

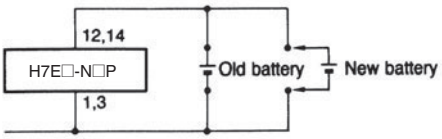

Wiring polarity must be carefully observed, in order to prevent permanent damage to the Counters. Exercise caution when inserting the Counter in the socket, to prevent reversed polarity.

Inputs

Do not route the wiring of the count, timer, or reset inputs in the vicinity of, or in parallel to the wiring of high-voltage or inductive load circuits (such as motors and relays). Also, keep the wiring as short as possible.

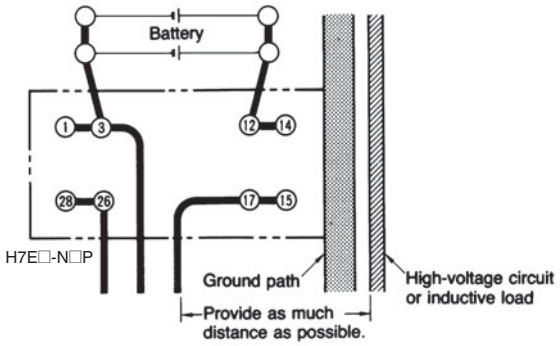

Be careful not to apply voltages exceeding the following values to the count, timer, or reset terminals, otherwise the internal circuit may be damaged.

No-voltage input: 3 VDC

General Information

Finish soldering under the conditions below.
Solder the terminals within 5 seconds, at a solder iron tip temperature of 250°C ± 10°C when using lead solder, and within 3 seconds, at a solder iron tip temperature of 350°C ± 10°C when using lead-free solder.

Since the Counter is not flux-tight, do not use flux when soldering.

Avoid automatic and dip soldering. Manually solder the Counter onto a PC board, and avoid cleaning as much as possible.

When mounting the Counter on a PC board with components which consume higher current than the H7E□-N□P, observe the following precautions.

1. Minimize the wiring (less than 50 mm) from the H7E□-N□P to the power supply section.
2. Avoid placing the H7E□-N□P power, timer, counter, or reset input circuit in parallel with circuits that consume large currents, particularly on the positive side.

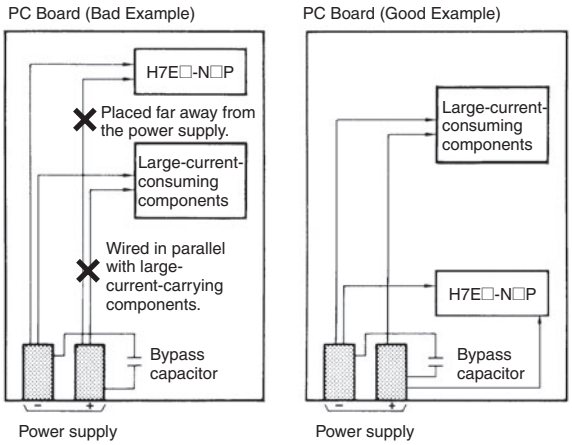

When using the Counter in an environment where the Counter is subject to frequent occurrences of vibration or shock, or when mounting the Counter facing downwards or sideways, it is suggested that the Counter be directly soldered to a PCB instead of using sockets.

To Conform to EN/IEC Standards

Input terminals have no insulation from power supply terminals. The power supply terminals must be supplied from a SELV source in accordance with IEC61010-1 Annex H. SELV (separated extra-low voltage) source is a power supply having double or reinforced insulation between the primary and the secondary circuit and having output voltage of 30 V rms max. and 42.4 V peak max. or 60 VDC max.

Cleaning

To prevent damage, the exterior of the Counter must not be exposed to organic solvents (3.g. paint thinner or benzine), strong alkalis, or strong acids.

Others

- No user-serviceable parts.
- Return to OMRON for all repairs.

ALL DIMENSIONS SHOWN ARE IN MILLIMETERS.
To convert millimeters into inches, multiply by 0.03937. To convert grams into ounces, multiply by 0.03527.

In the interest of product improvement, specifications are subject to change without notice.

Read and Understand This Catalog

Please read and understand this catalog before purchasing the products. Please consult your OMRON representative if you have any questions or comments.

Warranty and Limitations of Liability

WARRANTY

OMRON's exclusive warranty is that the products are free from defects in materials and workmanship for a period of one year (or other period if specified) from date of sale by OMRON.

OMRON MAKES NO WARRANTY OR REPRESENTATION, EXPRESS OR IMPLIED, REGARDING NON-INFRINGEMENT, MERCHANTABILITY, OR FITNESS FOR PARTICULAR PURPOSE OF THE PRODUCTS. ANY BUYER OR USER ACKNOWLEDGES THAT THE BUYER OR USER ALONE HAS DETERMINED THAT THE PRODUCTS WILL SUITABLY MEET THE REQUIREMENTS OF THEIR INTENDED USE. OMRON DISCLAIMS ALL OTHER WARRANTIES, EXPRESS OR IMPLIED.

LIMITATIONS OF LIABILITY

OMRON SHALL NOT BE RESPONSIBLE FOR SPECIAL, INDIRECT, OR CONSEQUENTIAL DAMAGES, LOSS OF PROFITS OR COMMERCIAL LOSS IN ANY WAY CONNECTED WITH THE PRODUCTS, WHETHER SUCH CLAIM IS BASED ON CONTRACT, WARRANTY, NEGLIGENCE, OR STRICT LIABILITY.

In no event shall the responsibility of OMRON for any act exceed the individual price of the product on which liability is asserted.

IN NO EVENT SHALL OMRON BE RESPONSIBLE FOR WARRANTY, REPAIR, OR OTHER CLAIMS REGARDING THE PRODUCTS UNLESS OMRON'S ANALYSIS CONFIRMS THAT THE PRODUCTS WERE PROPERLY HANDLED, STORED, INSTALLED, AND MAINTAINED AND NOT SUBJECT TO CONTAMINATION, ABUSE, MISUSE, OR INAPPROPRIATE MODIFICATION OR REPAIR.

Application Considerations

SUITABILITY FOR USE

OMRON shall not be responsible for conformity with any standards, codes, or regulations that apply to the combination of products in the customer's application or use of the products.

At the customer's request, OMRON will provide applicable third party certification documents identifying ratings and limitations of use that apply to the products. This information by itself is not sufficient for a complete determination of the suitability of the products in combination with the end product, machine, system, or other application or use.

The following are some examples of applications for which particular attention must be given. This is not intended to be an exhaustive list of all possible uses of the products, nor is it intended to imply that the uses listed may be suitable for the products:

- Outdoor use, uses involving potential chemical contamination or electrical interference, or conditions or uses not described in this catalog.
- Nuclear energy control systems, combustion systems, railroad systems, aviation systems, medical equipment, amusement machines, vehicles, safety equipment, and installations subject to separate industry or government regulations.
- Systems, machines, and equipment that could present a risk to life or property.

Please know and observe all prohibitions of use applicable to the products.

NEVER USE THE PRODUCTS FOR AN APPLICATION INVOLVING SERIOUS RISK TO LIFE OR PROPERTY WITHOUT ENSURING THAT THE SYSTEM AS A WHOLE HAS BEEN DESIGNED TO ADDRESS THE RISKS, AND THAT THE OMRON PRODUCTS ARE PROPERLY RATED AND INSTALLED FOR THE INTENDED USE WITHIN THE OVERALL EQUIPMENT OR SYSTEM.

PROGRAMMABLE PRODUCTS

OMRON shall not be responsible for the user's programming of a programmable product, or any consequence thereof.

Disclaimers

CHANGE IN SPECIFICATIONS

Product specifications and accessories may be changed at any time based on improvements and other reasons.

It is our practice to change model numbers when published ratings or features are changed, or when significant construction changes are made. However, some specifications of the products may be changed without any notice. When in doubt, special model numbers may be assigned to fix or establish key specifications for your application on your request. Please consult with your OMRON representative at any time to confirm actual specifications of purchased products.

DIMENSIONS AND WEIGHTS

Dimensions and weights are nominal and are not to be used for manufacturing purposes, even when tolerances are shown.

PERFORMANCE DATA

Performance data given in this catalog is provided as a guide for the user in determining suitability and does not constitute a warranty. It may represent the result of OMRON's test conditions, and the users must correlate it to actual application requirements. Actual performance is subject to the OMRON Warranty and Limitations of Liability.

ERRORS AND OMISSIONS

The information in this document has been carefully checked and is believed to be accurate; however, no responsibility is assumed for clerical, typographical, or proofreading errors, or omissions.

2010.6

In the interest of product improvement, specifications are subject to change without notice.

OMRON Corporation
Industrial Automation Company

http://www.ia.omron.com/

(c)Copyright OMRON Corporation 2010 All Right Reserved.

ООО «ЛайфЭлектроникс» “LifeElectronics” LLC

ИНН 7805602321 КПП 780501001 Р/С 40702810122510004610 ФАКБ "АБСОЛЮТ БАНК" (ЗАО) в г.Санкт-Петербурге К/С 30101810900000000703 БИК 044030703

Компания «Life Electronics» занимается поставками электронных компонентов импортного и отечественного производства от производителей и со складов крупных дистрибьюторов Европы, Америки и Азии.

С конца 2013 года компания активно расширяет линейку поставок компонентов по направлению коаксиальный кабель, кварцевые генераторы и конденсаторы (керамические, пленочные, электролитические), за счёт заключения дистрибьюторских договоров

Мы предлагаем:

- *Конкурентоспособные цены и скидки постоянным клиентам.*
- *Специальные условия для постоянных клиентов.*
- *Подбор аналогов.*
- *Поставку компонентов в любых объемах, удовлетворяющих вашим потребностям.*

- *Приемлемые сроки поставки, возможна ускоренная поставка.*
- *Доставку товара в любую точку России и стран СНГ.*
- *Комплексную поставку.*
- *Работу по проектам и поставку образцов.*
- *Формирование склада под заказчика.*

- *Сертификаты соответствия на поставляемую продукцию (по желанию клиента).*
- *Тестирование поставляемой продукции.*
- *Поставку компонентов, требующих военную и космическую приемку.*
- *Входной контроль качества.*
- *Наличие сертификата ISO.*

В составе нашей компании организован Конструкторский отдел, призванный помогать разработчикам, и инженерам.

Конструкторский отдел помогает осуществить:

- *Регистрацию проекта у производителя компонентов.*
- *Техническую поддержку проекта.*
- *Защиту от снятия компонента с производства.*
- *Оценку стоимости проекта по компонентам.*
- *Изготовление тестовой платы монтаж и пусконаладочные работы.*

Тел: +7 (812) 336 43 04 (многоканальный)
Email: org@lifeelectronics.ru

www.lifeelectronics.ru