Microsemi
SCOTTSDALE DIVISION

1N821 thru 1N829A-1 DO-7

6.2 & 6.55 Volt Temperature Compensated Zener Reference Diodes

ALSO AVAILABLE IN SURFACE MOUNT

DESCRIPTION

The popular 1N821 thru 1N829 series of Zero-TC Reference Diodes provides a selection of both 6.2 V and 6.55 V nominal voltages and temperature coefficients to as low as 0.0005%/°C for minimal voltage change with temperature when operated at 7.5 mA. These glass axial-leaded DO-7 reference diodes are also available in JAN, JANTX, JANTXV, and JANS military qualifications. Microsemi also offers numerous other Zener Reference Diode products for a variety of other voltages up to 200 V.

APPEARANCE

DO-7
(DO-204AA)

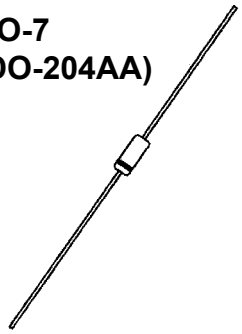

IMPORTANT: For the most current data, consult *MICROSEMI's* website: http://www.microsemi.com

FEATURES

- JEDEC registered 1N821 thru 1N829 series
- Internal metallurgical bonds
- Double anode option with 1N822 and 1N824 selection
- Reference voltage selection of 6.2 V & 6.55 V +/-5% with further tight tolerance options at nominal of 6.35 V
- 1N821, 823, 825, 827 and 829 also have military qualification to MIL-PRF-19500/159 up to the JANS level by adding JAN, JANTX, JANTXV, or JANS prefixes to part numbers as well as the "-1" suffix, e.g. JANTX1N829-1, etc.
- Radiation Hardened devices available by changing "1N" prefix to "RH", e.g. RH827, RH 829, RH829A, etc. Also consult factory for "RH" data sheet brochure
- Military surface mount equivalents also available in DO-213AA with UR-1 suffix and JAN, JANTX, or JANTXV prefix, e.g. JANTX1N829UR-1 (see separate data sheet)
- Also available in smaller axial-leaded DO-35 package (see separate data sheet)

APPLICATIONS / BENEFITS

- Provides minimal voltage changes over a broad temperature range
- For instrumentation and other circuit designs requiring a stable voltage reference
- Maximum temperature coefficient selections available from 0.01%/ºC to 0.0005%/ºC
- Tight voltage tolerances with nominal reference voltages of 6.35 V available by adding tolerance 1%, 2%, 3%, etc. after the part number for identification e.g. 1N827-2%, 1N829A -1%, 1N829-1-1%, etc.
- Flexible axial-lead mounting terminals
- Nonsensitive to ESD per MIL-STD-750 Method 1020

MAXIMUM RATINGS

- Operating & StorageTemperature: -65°C to +175°C
- DC Power Dissipation: 500 mW @ T_L = 25°C and maximum current I_{ZM} of 70 mA. NOTE: For optimum voltage-temperature stability, I_Z = 7.5 mA (less than 50 mW in dissipated power)
- Solder temperatures: 260 °C for 10 s (maximum)

MECHANICAL AND PACKAGING

- CASE: Hermetically sealed glass case with DO-7 (DO-204AA) package
- TERMINALS: Tin-lead plated and solderable per MIL-STD-750, Method 2026
- MARKING: Part number and cathode band (except double anode 1N822 and 1N824)
- POLARITY: Reference diode to be operated with the banded end positive with respect to the opposite end
- TAPE & REEL option: Standard per EIA-296 (add "TR" suffix to part number)
- WEIGHT: 0.2 grams.
- See package dimensions on last page

Copyright © 2003

Microsemi
Scottsdale Division
8700 E. Thomas Rd. PO Box 1390, Scottsdale, AZ 85252 USA, (480) 941-6300, Fax: (480) 947-1503

*ELECTRICAL CHARACTERISTICS @ 25°C, unless otherwise specified

JEDEC TYPE NUMBER (Note 1, 5 & 6)	ZENER VOLTAGE (Note 1 and 4) V_Z @ I_{ZT}	ZENER TEST CURRENT I_{ZT}	MAXIMUM ZENER IMPEDANCE (Note 2) Z_{ZT} @ I_{ZT}	MAXIMUM REVERSE CURRENT I_R @ 3 V	VOLTAGE TEMPERATURE STABILITY (ΔV_{ZT} MAX) -55°C to +100°C (Note 3 and 4)	EFFECTIVE TEMPERATURE COEFFICIENT α_{VZ}
	VOLTS	mA	OHMS	µA	mV	%/°C
1N821	5.9 – 6.5	7.5	15	2.0	96	0.01
1N821A	5.9 – 6.5	7.5	10	2.0	96	0.01
1N822†	5.9 – 6.5	7.5	15	2.0	96	0.01
1N823	5.9 – 6.5	7.5	15	2.0	48	0.005
1N823A	5.9 – 6.5	7.5	10	2.0	48	0.005
1N824†	5.9 – 6.5	7.5	15	2.0	48	0.005
1N825	5.9 – 6.5	7.5	15	2.0	19	0.002
1N825A	5.9 – 6.5	7.5	10	2.0	19	0.002
1N826	6.2 – 6.9	7.5	15	2.0	20	0.002
1N827	5.9 – 6.5	7.5	15	2.0	9	0.001
1N827A	5.9 – 6.5	7.5	10	2.0	9	0.001
1N828	6.2 – 6.9	7.5	15	2.0	10	0.001
1N829	5.9 – 6.5	7.5	15	2.0	5	0.0005
1N829A	5.9 – 6.5	7.5	10	2.0	5	0.0005

*JEDEC Registered Data.

†Double Anode; electrical specifications apply under both bias polarities.

NOTES:

1. Add a "-1" suffix for internal metallurgical bond. When ordering devices with tighter tolerances than specified for the V_Z voltage nominal of 6.35 V, add a hyphened suffix to the part number for desired tolerance, e.g. 1N827-1-2%, 1N829-1-1%, 1N829A-1%, 1N829A-1-1%, etc.
2. Zener impedance measured by superimposing 0.75 mA ac rms on 7.5 mA dc @ 25°C.
3. The maximum allowable change observed over the entire temperature range i.e., the diode voltage will not exceed the specified mV change at discrete temperature between the established limits.
4. Voltage measurements to be performed 15 seconds after application of dc current.
5. 1N821, 1N823, 1N825, 1N827, and 1N829 also have qualification to MIL-PRF-19500/159 by adding the JAN, JANTX, JANTXV, or JANS prefix to part numbers as well as the "-1" suffix; e.g. JANTX1N827-1, JANTXV1N829-1, etc.
6. Designate Radiation Hardened devices with "RH" prefix instead of "1N", e.g. RH829A instead of 1N829A.

GRAPHS

The curve shown in Figure 1 is typical of the diode series and greatly simplifies the estimation of the Temperature Coefficient (TC) when the diode is operated at currents other than 7.5mA.

EXAMPLE: A diode in this series is operated at a current of 7.5mA and has specified Temperature Coefficient (TC) limits of +/-0.005%/°C. To obtain the typical Temperature Coefficient limits for this same diode operated at a current of 6.0mA, the new TC limits (%/°C) can be estimated using the graph in FIGURE 1.

At a test current of 6.0mA the change in Temperature Coefficient (TC) is approximately –0.0006%.°C. The algebraic sum of +/-0.005%°C and –0.0006%/°C gives the estimated limits of +0.0044%/°C and -0.0056%/°C.

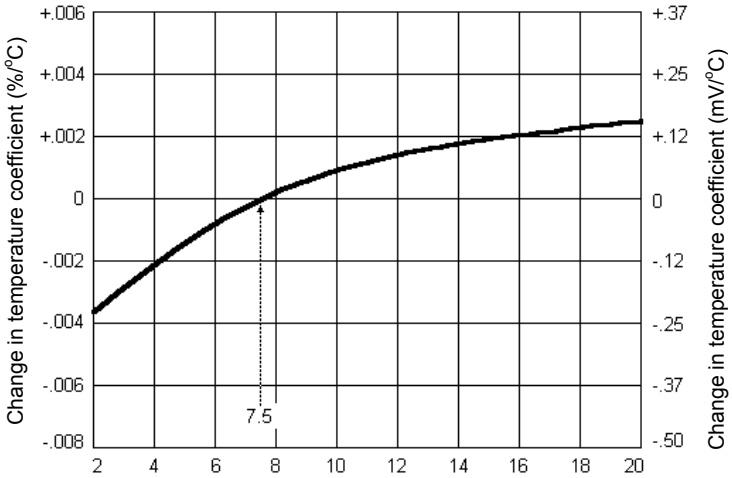

FIGURE 1

TYPICAL CHANGE OF TEMPERATURE COEFFICIENT WITH CHANGE IN OPERATING CURRENT.

www.Microsemi.COM

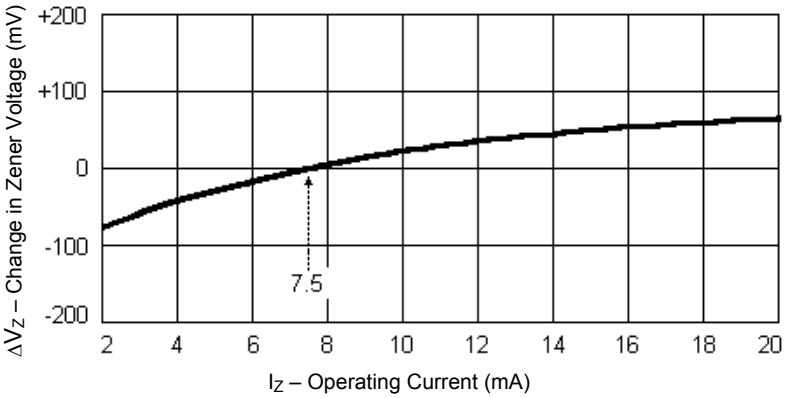

FIGURE 2
TYPICAL CHANGE OF ZENER VOLTAGE WITH CHANGE IN OPERATING CURRENT

This curve in Figure 2 illustrates the change of diode voltage arising from the effect of impedance. It is in effect an exploded view of the zener operating region of the I-V characteristic.

In conjunction with Figure 1, this curve can be used to estimate total voltage regulation under conditions of both varying temperature and current.

DIMENSIONS

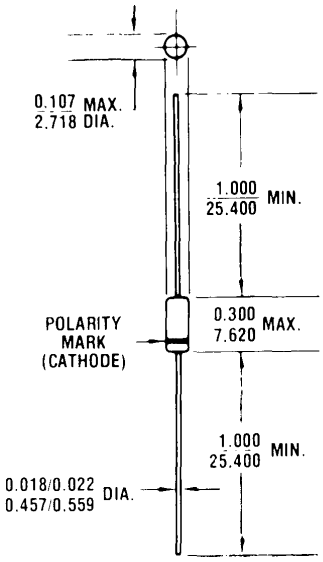

All dimensions in INCH
mm

www.Microsemi.COM

ООО «ЛайфЭлектроникс» “LifeElectronics” LLC

ИНН 7805602321 КПП 780501001 Р/С 40702810122510004610 ФАКБ "АБСОЛЮТ БАНК" (ЗАО) в г.Санкт-Петербурге К/С 30101810900000000703 БИК 044030703

Компания «Life Electronics» занимается поставками электронных компонентов импортного и отечественного производства от производителей и со складов крупных дистрибьюторов Европы, Америки и Азии.

С конца 2013 года компания активно расширяет линейку поставок компонентов по направлению коаксиальный кабель, кварцевые генераторы и конденсаторы (керамические, пленочные, электролитические), за счёт заключения дистрибьюторских договоров

Мы предлагаем:

- *Конкурентоспособные цены и скидки постоянным клиентам.*
- *Специальные условия для постоянных клиентов.*
- *Подбор аналогов.*
- *Поставку компонентов в любых объемах, удовлетворяющих вашим потребностям.*

- *Приемлемые сроки поставки, возможна ускоренная поставка.*
- *Доставку товара в любую точку России и стран СНГ.*
- *Комплексную поставку.*
- *Работу по проектам и поставку образцов.*
- *Формирование склада под заказчика.*

- *Сертификаты соответствия на поставляемую продукцию (по желанию клиента).*
- *Тестирование поставляемой продукции.*
- *Поставку компонентов, требующих военную и космическую приемку.*
- *Входной контроль качества.*
- *Наличие сертификата ISO.*

В составе нашей компании организован Конструкторский отдел, призванный помогать разработчикам, и инженерам.

Конструкторский отдел помогает осуществить:

- *Регистрацию проекта у производителя компонентов.*
- *Техническую поддержку проекта.*
- *Защиту от снятия компонента с производства.*
- *Оценку стоимости проекта по компонентам.*
- *Изготовление тестовой платы монтаж и пусконаладочные работы.*

Тел: +7 (812) 336 43 04 (многоканальный)
Email: org@lifeelectronics.ru

www.lifeelectronics.ru