3.3V CMOS Static RAM
1 Meg (64K x 16-Bit)

IDT71V016SA

Features

- **64K x 16 advanced high-speed CMOS Static RAM**
- **Equal access and cycle times**
  - *— Commercial: 10/12/15/20ns*
  - *— Industrial: 10/12/15/20ns*
- **One Chip Select plus one Output Enable pin**
- **Bidirectional data inputs and outputs directly LVTTL-compatible**
- **Low power consumption via chip deselect**
- **Upper and Lower Byte Enable Pins**
- **Single 3.3V power supply**
- **Available in 44-pin Plastic SOJ, 44-pin TSOP, and 48-Ball Plastic FBGA packages**

Description

The IDT71V016 is a 1,048,576-bit high-speed Static RAM organized as 64K x 16. It is fabricated using high-perfomance, high-reliability CMOS technology. This state-of-the-art technology, combined with innovative circuit design techniques, provides a cost-effective solution for high-speed memory needs.

The IDT71V016 has an output enable pin which operates as fast as 5ns, with address access times as fast as 10ns. All bidirectional inputs and outputs of the IDT71V016 are LVTTL compatible and operation is from a single 3.3V supply. Fully static asynchronous circuitry is used, requiring no clocks or refresh for operation.

The IDT71V016 is packaged in a JEDEC standard 44-pin Plastic SOJ, a 44-pin TSOP Type II, and a 48-ball plastic 7 x 7 mm FBGA.

Functional Block Diagram

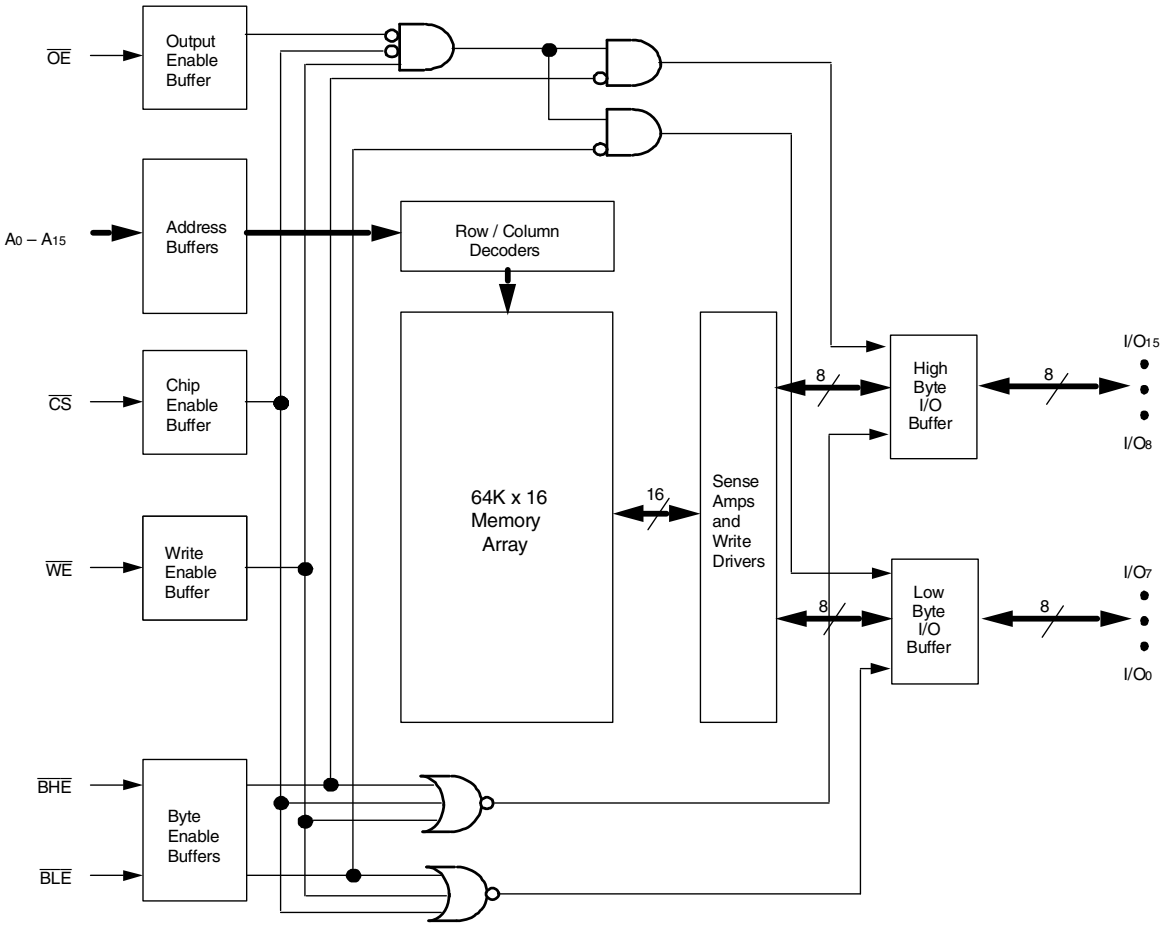

3834 drw 01

AUGUST 2013

© 2013 Integrated Device Technology, Inc. All rights reserved. Product specifications subject to change without notice. DSC-3834/13

Pin Configurations

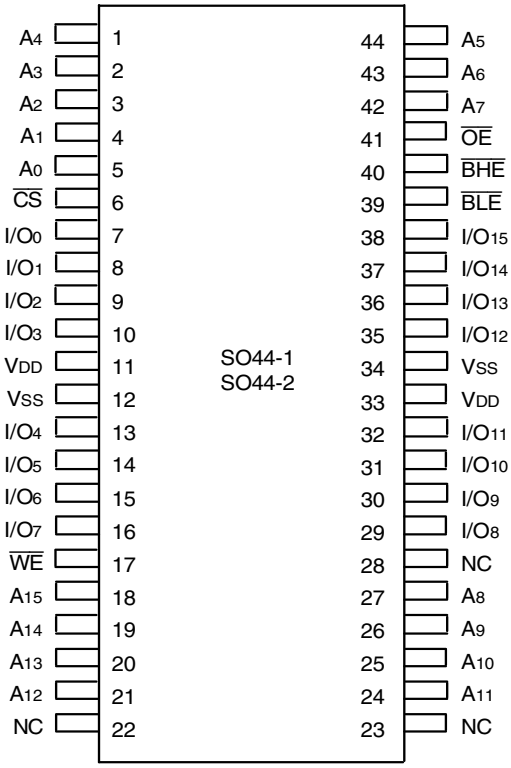

3834 drw 02

SOJ/TSOP
Top View

	1	2	3	4	5	6
A	BLE	OE	A_0	A_1	A_2	NC
B	I/O_8	BHE	A_3	A_4	CS	I/O_0
C	I/O_9	I/O_{10}	A_5	A_6	I/O_1	I/O_2
D	V_{SS}	I/O_{11}	NC	A_7	I/O_3	V_{DD}
E	V_{DD}	I/O_{12}	NC	NC	I/O_4	V_{SS}
F	I/O_{14}	I/O_{13}	A_{14}	A_{15}	I/O_5	I/O_6
G	I/O_{15}	NC	A_{12}	A_{13}	WE	I/O_7
H	NC	A_8	A_9	A_{10}	A_{11}	NC

3834 tbl 02a

FBGA (BF48-1)
Top View

Pin Description

Truth Table[1]

CS	OE	WE	BLE	BHE	I/O_0-I/O_7	I/O_8-I/O_{15}	Function
H	X	X	X	X	High-Z	High-Z	Deselected – Standby
L	L	H	L	H	$DATA_{OUT}$	High-Z	Low Byte Read
L	L	H	H	L	High-Z	$DATA_{OUT}$	High Byte Read
L	L	H	L	L	$DATA_{OUT}$	$DATA_{OUT}$	Word Read
L	X	L	L	L	$DATA_{IN}$	$DATA_{IN}$	Word Write
L	X	L	L	H	$DATA_{IN}$	High-Z	Low Byte Write
L	X	L	H	L	High-Z	$DATA_{IN}$	High Byte Write
L	H	H	X	X	High-Z	High-Z	Outputs Disabled
L	X	X	H	H	High-Z	High-Z	Outputs Disabled

3834 tbl 02

NOTE:
1. H = V_{IH}, L = V_{IL}, X = Don't care.

Absolute Maximum Ratings(1)

Symbol	Rating	Value	Unit
V_{DD}	Supply Voltage Relative to V_{SS}	–0.5 to +4.6	V
V_{IN}, V_{OUT}	Terminal Voltage Relative to V_{SS}	–0.5 to V_{DD}+0.5	V
T_{BIAS}	Temperature Under Bias	–55 to +125	°C
T_{STG}	Storage Temperature	–55 to +125	°C
P_T	Power Dissipation	1.25	W
I_{OUT}	DC Output Current	50	mA

3834 tbl 03

NOTE:
1. Stresses greater than those listed under ABSOLUTE MAXIMUM RATINGS may cause permanent damage to the device. This is a stress rating only and functional operation of the device at these or any other conditions above those indicated in the operational sections of this specification is not implied. Exposure to absolute maximum rating conditions for extended periods may affect reliability.

Capacitance

(T_A = +25°C, f = 1.0MHz, SOJ package)

Symbol	Parameter(1)	Conditions	Max.	Unit
C_{IN}	Input Capacitance	V_{IN} = 3dV	6	pF
$C_{I/O}$	I/O Capacitance	V_{OUT} = 3dV	7	pF

3834 tbl 06

NOTE:
1. This parameter is guaranteed by device characterization, but not production tested.

Recommended Operating Temperature and Supply Voltage

Grade	Temperature	Vss	V_{DD}
Commercial	0°C to +70°C	0V	See Below
Industrial	-40°C to +85°C	0V	See Below

3834 tbl 04

Recommended DC Operating Conditions

Symbol	Parameter	Min.	Typ.	Max.	Unit
V_{DD}(1)	Supply Voltage	3.15	3.3	3.6	V
V_{DD}(2)	Supply Voltage	3.0	3.3	3.6	V
Vss	Ground	0	0	0	V
V_{IH}	Input High Voltage	2.0	—	V_{DD}+0.3(3)	V
V_{IL}	Input Low Voltage	–0.3(4)	—	0.8	V

3834 tbl 05

NOTES:
1. For 71V016SA10 only.
2. For all speed grades except 71V016SA10.
3. V_{IH} (max.) = V_{DD}+2V for pulse width less than 5ns, once per cycle.
4. V_{IL} (min.) = –2V for pulse width less than 5ns, once per cycle.

DC Electrical Characteristics

(V_{DD} = Min. to Max., Commercial and Industrial Temperature Ranges)

Symbol	Parameter	Test Condition	IDT71V016SA Min.	IDT71V016SA Max.	Unit
$\|I_{LI}\|$	Input Leakage Current	V_{DD} = Max., V_{IN} = Vss to V_{DD}	—	5	µA
$\|I_{LO}\|$	Output Leakage Current	V_{DD} = Max., $\overline{CS}$ = V_{IH}, V_{OUT} = Vss to V_{DD}	—	5	µA
V_{OL}	Output Low Voltage	I_{OL} = 8mA, V_{DD} = Min.	—	0.4	V
V_{OH}	Output High Voltage	I_{OH} = –4mA, V_{DD} = Min.	2.4	—	V

3834 tbl 07

DC Electrical Characteristics(1,2)

(V_{DD} = Min. to Max., V_{LC} = 0.2V, V_{HC} = V_{DD} – 0.2V)

Symbol	Parameter		71V016SA10 Com'l	71V016SA10 Ind'l	71V016SA12 Com'l	71V016SA12 Ind'l	71V016SA15 Com'l	71V016SA15 Ind'l	71V016SA20 Com'l	71V016SA20 Ind'l	Unit
I_{CC}	Dynamic Operating Current $\overline{CS}$ ≤ V_{LC}, Outputs Open, V_{DD} = Max., f = f_{MAX}(3)	Max.	160	170	150	160	130	130	120	120	mA
		Typ.(4)	65	--	60	--	55	--	50	--	
I_{SB}	Dynamic Standby Power Supply Current $\overline{CS}$ ≥ V_{HC}, Outputs Open, V_{DD} = Max., f = f_{MAX}(3)		45	50	40	45	35	35	30	30	mA
I_{SB1}	Full Standby Power Supply Current (static) $\overline{CS}$ ≥ V_{HC}, Outputs Open, V_{DD} = Max., f = 0(3)		10	10	10	10	10	10	10	10	mA

3834 tbl 08

NOTES:
1. All values are maximum guaranteed values.
2. All inputs switch between 0.2V (Low) and V_{DD} – 0.2V (High).
3. f_{MAX} = 1/t_{RC} (all address inputs are cycling at f_{MAX}); f = 0 means no address input lines are changing .
4. Typical values are based on characterization data for H step only measured at 3.3V, 25°C and with equal read and write cycles.

AC Test Conditions

Input Pulse Levels	GND to 3.0V
Input Rise/Fall Times	1.5ns
Input Timing Reference Levels	1.5V
Output Reference Levels	1.5V
AC Test Load	See Figure 1, 2 and 3

3834 tbl 09

AC Test Loads

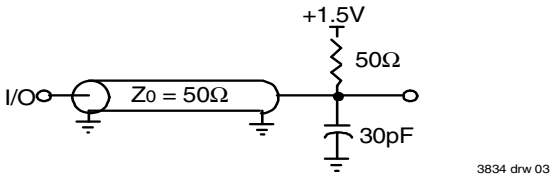

Figure 1. AC Test Load

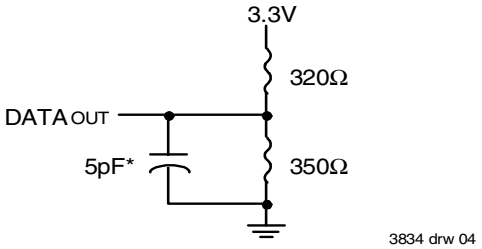

*Including jig and scope capacitance.

Figure 2. AC Test Load
(for t_{CLZ}, t_{OLZ}, t_{CHZ}, t_{OHZ}, t_{OW}, and t_{WHZ})

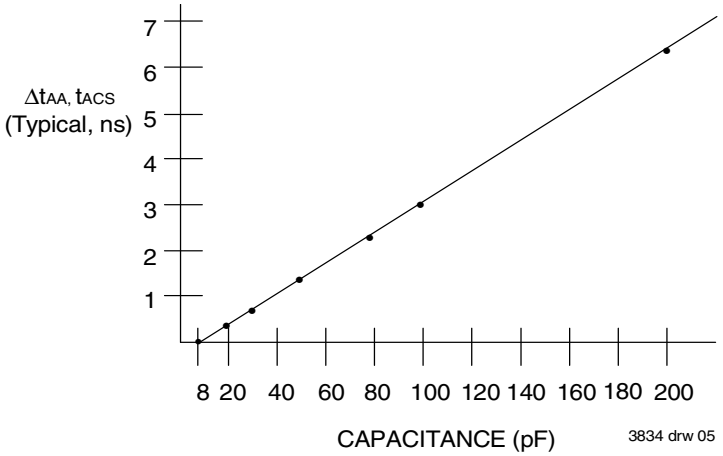

Figure 3. Output Capacitive Derating

AC Electrical Characteristics (VDD = Min. to Max., Commercial and Industrial Temperature Ranges)

Symbol	Parameter	71V016SA10		71V016SA12		71V016SA15		71V016SA20		Unit
		Min.	Max.	Min.	Max.	Min.	Max.	Min.	Max.	
READ CYCLE										
t_{RC}	Read Cycle Time	10	—	12	—	15	—	20	—	ns
t_{AA}	Address Access Time	—	10	—	12	—	15	—	20	ns
t_{ACS}	Chip Select Access Time	—	10	—	12	—	15	—	20	ns
t_{CLZ}(1)	Chip Select Low to Output in Low-Z	4	—	4	—	5	—	5	—	ns
t_{CHZ}(1)	Chip Select High to Output in High-Z	—	5	—	6	—	6	—	8	ns
t_{OE}	Output Enable Low to Output Valid	—	5	—	6	—	7	—	8	ns
t_{OLZ}(1)	Output Enable Low to Output in Low-Z	0	—	0	—	0	—	0	—	ns
t_{OHZ}(1)	Output Enable High to Output in High-Z	—	5	—	6	—	6	—	8	ns
t_{OH}	Output Hold from Address Change	4	—	4	—	4	—	4	—	ns
t_{BE}	Byte Enable Low to Output Valid	—	5	—	6	—	7	—	8	ns
t_{BLZ}(1)	Byte Enable Low to Output in Low-Z	0	—	0	—	0	—	0	—	ns
t_{BHZ}(1)	Byte Enable High to Output in High-Z	—	5	—	6	—	6	—	8	ns
WRITE CYCLE										
t_{WC}	Write Cycle Time	10	—	12	—	15	—	20	—	ns
t_{AW}	Address Valid to End of Write	7	—	8	—	10	—	12	—	ns
t_{CW}	Chip Select Low to End of Write	7	—	8	—	10	—	12	—	ns
t_{BW}	Byte Enable Low to End of Write	7	—	8	—	10	—	12	—	ns
t_{AS}	Address Set-up Time	0	—	0	—	0	—	0	—	ns
t_{WR}	Address Hold from End of Write	0	—	0	—	0	—	0	—	ns
t_{WP}	Write Pulse Width	7	—	8	—	10	—	12	—	ns
t_{DW}	Data Valid to End of Write	5	—	6	—	7	—	9	—	ns
t_{DH}	Data Hold Time	0	—	0	—	0	—	0	—	ns
t_{OW}(1)	Write Enable High to Output in Low-Z	3	—	3	—	3	—	3	—	ns
t_{WHZ}(1)	Write Enable Low to Output in High-Z	—	5	—	6	—	6	—	8	ns

NOTE:
1. This parameter is guaranteed with the AC Load (Figure 2) by device characterization, but is not production tested.

3834 tbl 10

Timing Waveform of Read Cycle No. 1(1,2,3)

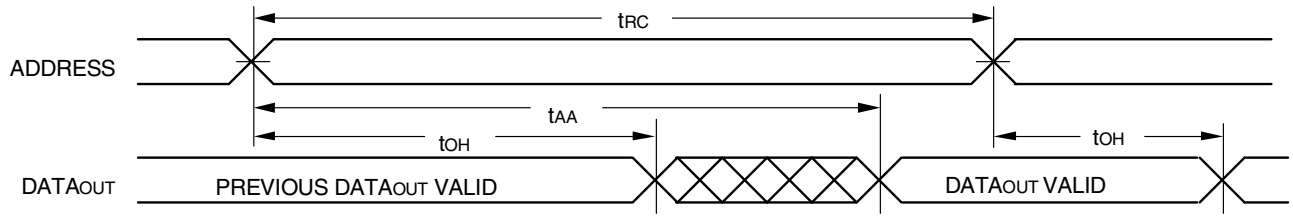

3834 drw 06

NOTES:
1. $\overline{WE}$ is HIGH for Read Cycle.
2. Device is continuously selected, $\overline{CS}$ is LOW.
3. $\overline{OE}$, $\overline{BHE}$, and $\overline{BLE}$ are LOW.

Timing Waveform of Read Cycle No. 2(1)

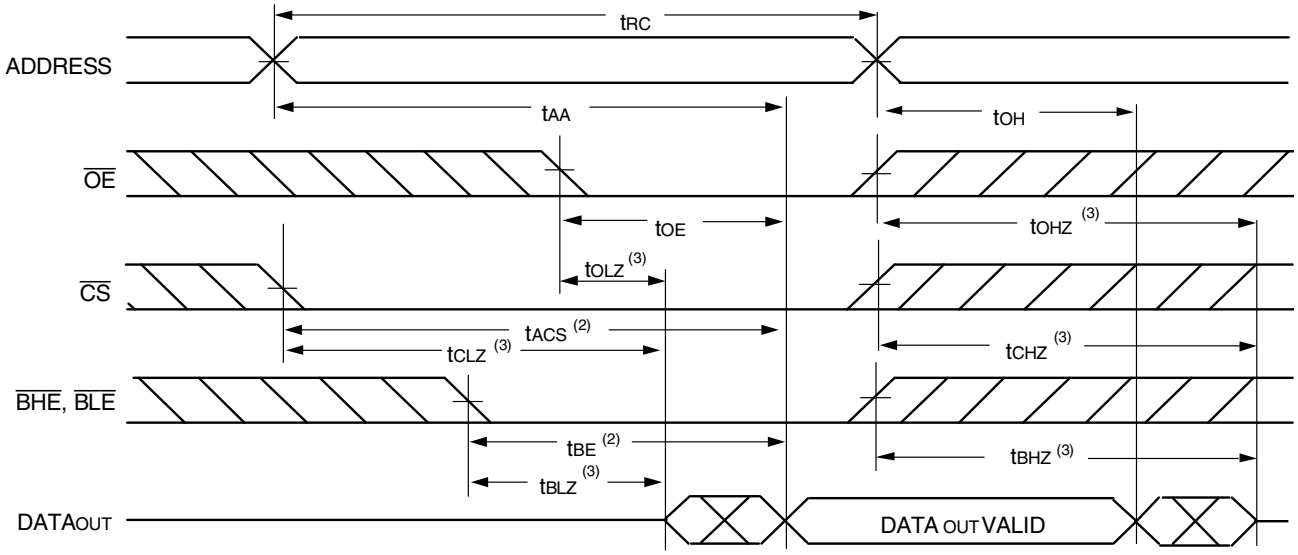

3834 drw 07

NOTES:
1. $\overline{WE}$ is HIGH for Read Cycle.
2. Address must be valid prior to or coincident with the later of $\overline{CS}$, $\overline{BHE}$, or $\overline{BLE}$ transition LOW; otherwise t_{AA} is the limiting parameter.
3. Transition is measured ±200mV from steady state.

Timing Waveform of Write Cycle No. 1 ($\overline{WE}$ Controlled Timing)(1,2,4)

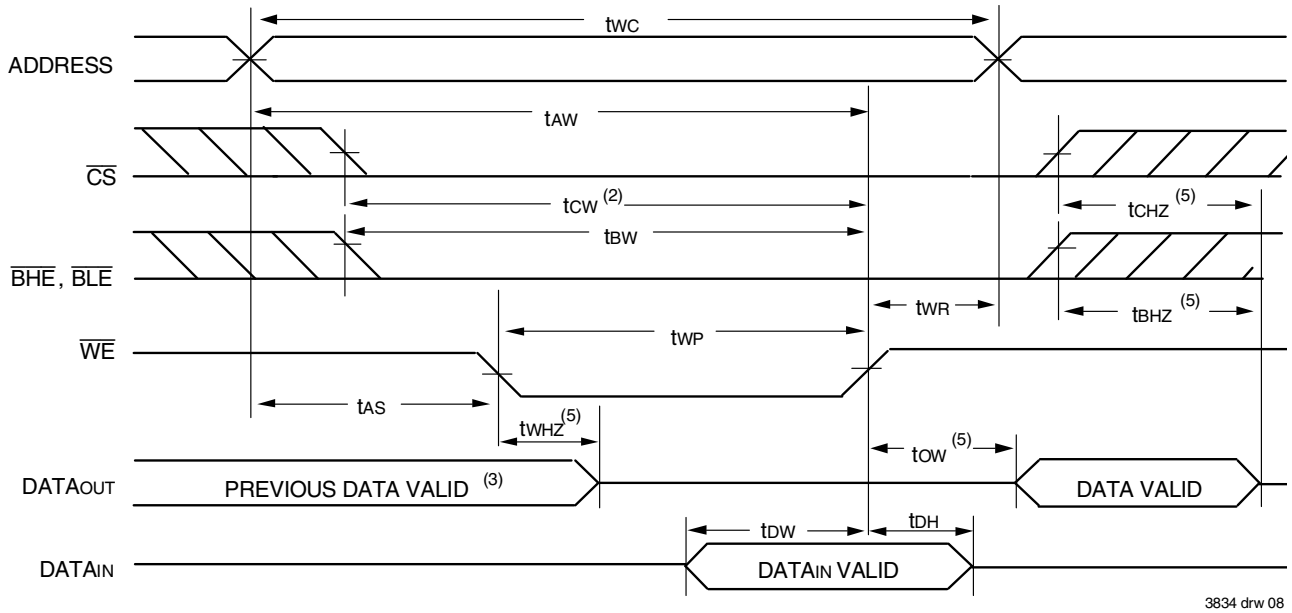

3834 drw 08

NOTES:
1. A write occurs during the overlap of a LOW $\overline{CS}$, LOW $\overline{BHE}$ or $\overline{BLE}$, and a LOW $\overline{WE}$.
2. $\overline{OE}$ is continuously HIGH. If during a $\overline{WE}$ controlled write cycle $\overline{OE}$ is LOW, t_{WP} must be greater than or equal to $t_{WHZ} + t_{DW}$ to allow the I/O drivers to turn off and data to be placed on the bus for the required t_{DW}. If $\overline{OE}$ is HIGH during a $\overline{WE}$ controlled write cycle, this requirement does not apply and the minimum write pulse is as short as the specified t_{WP}.
3. During this period, I/O pins are in the output state, and input signals must not be applied.
4. If the $\overline{CS}$ LOW or $\overline{BHE}$ and $\overline{BLE}$ LOW transition occurs simultaneously with or after the $\overline{WE}$ LOW transition, the outputs remain in a high-impedance state.
5. Transition is measured ±200mV from steady state.

Timing Waveform of Write Cycle No. 2 ($\overline{CS}$ Controlled Timing)(1,4)

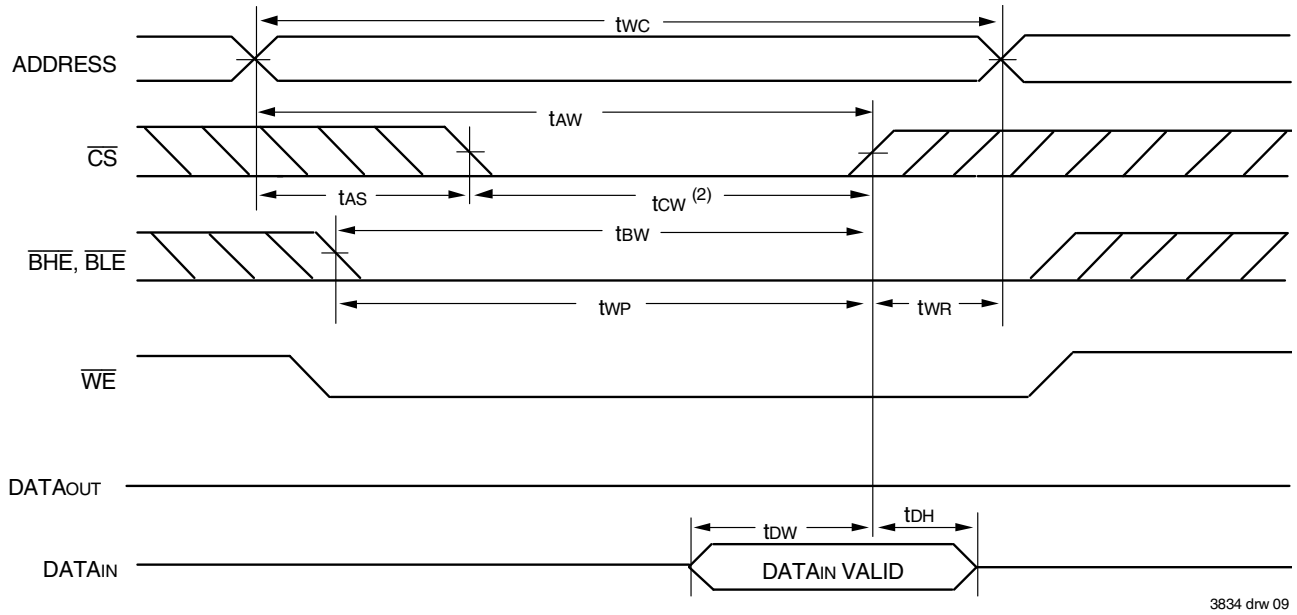

Timing Waveform of Write Cycle No. 3 ($\overline{BHE}$, $\overline{BLE}$ Controlled Timing)(1,4)

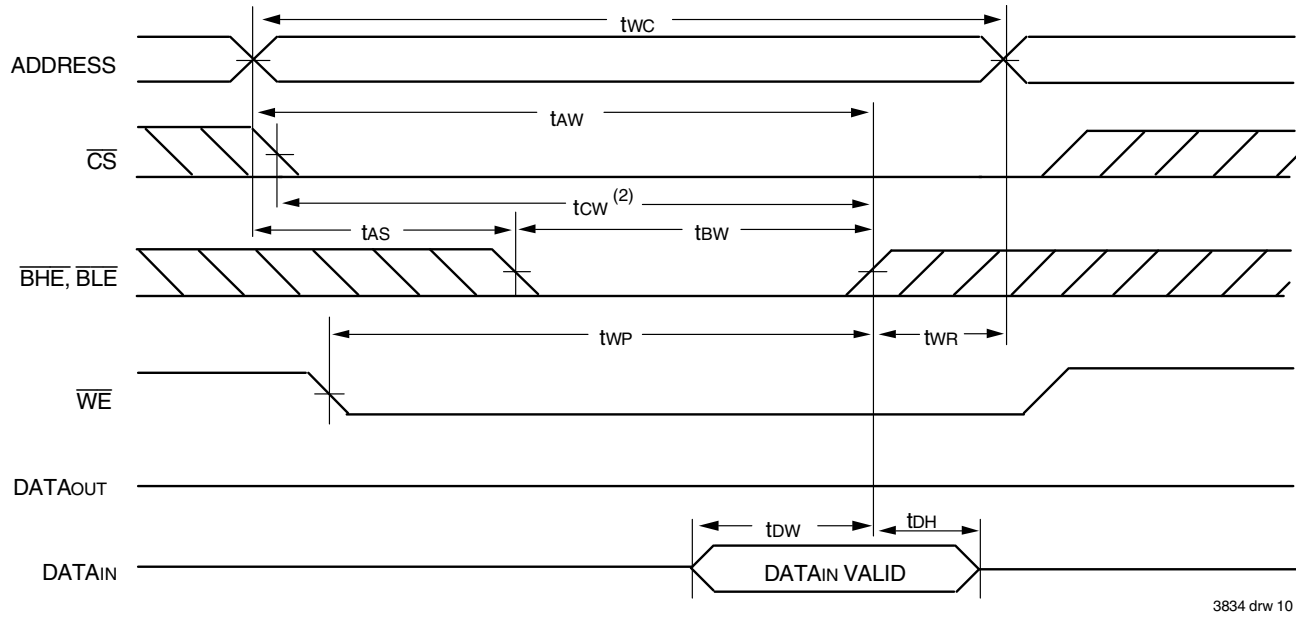

NOTES:

1. A write occurs during the overlap of a LOW $\overline{CS}$, LOW $\overline{BHE}$ or $\overline{BLE}$, and a LOW $\overline{WE}$.
2. $\overline{OE}$ is continuously HIGH. If during a $\overline{WE}$ controlled write cycle $\overline{OE}$ is LOW, t_{WP} must be greater than or equal to $t_{WHZ} + t_{DW}$ to allow the I/O drivers to turn off and data to be placed on the bus for the required t_{DW}. If $\overline{OE}$ is HIGH during a $\overline{WE}$ controlled write cycle, this requirement does not apply and the minimum write pulse is as short as the specified t_{WP}.
3. During this period, I/O pins are in the output state, and input signals must not be applied.
4. If the $\overline{CS}$ LOW or $\overline{BHE}$ and $\overline{BLE}$ LOW transition occurs simultaneously with or after the $\overline{WE}$ LOW transition, the outputs remain in a high-impedance state.
5. Transition is measured ±200mV from steady state.

Ordering Information

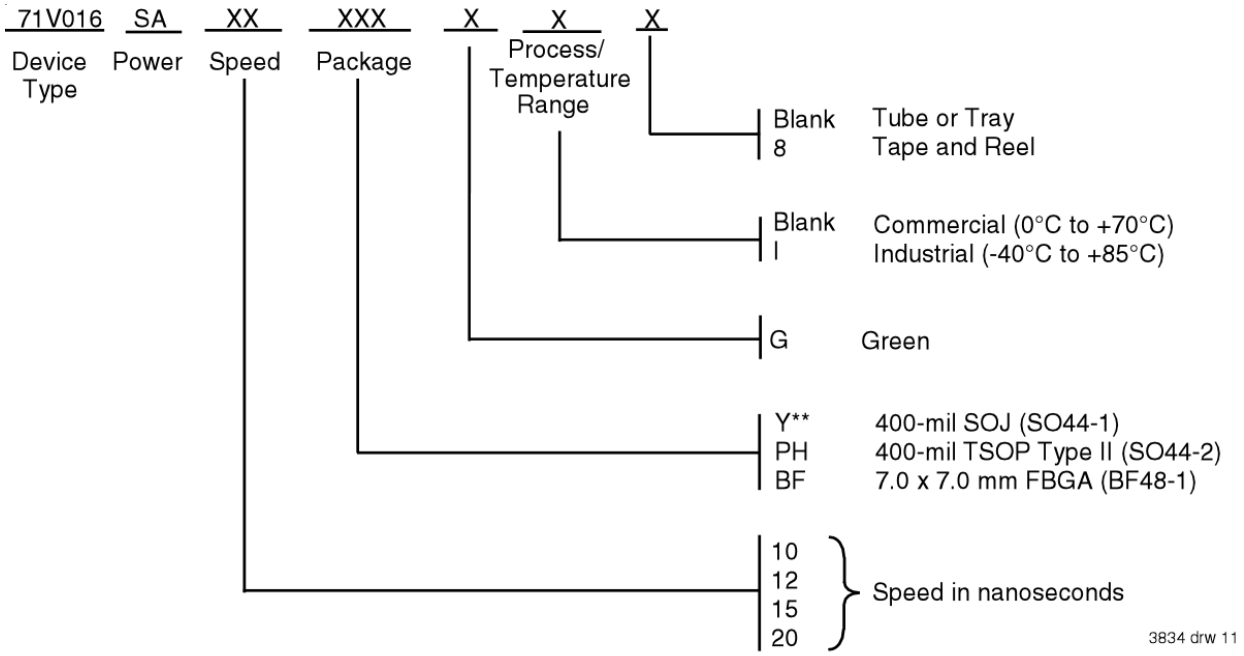

** This package not available in 10ns Industrial temperature range.

Datasheet Document History

01/07/00		Updated to new format
	Pg. 1, 3, 5, 8	Added Industrial Temperature range offerings
	Pg. 2	Numbered I/Os and address pins on FBGA Top View
	Pg. 6	Revised footnotes on Write Cycle No. 1 diagram
	Pg. 7	Revised footnotes on Write Cycle No. 2 and No. 3 diagrams
	Pg. 9	Added Datasheet Document History
08/30/00	Pg. 3	Tighten I_{CC} and I_{SB}.
	Pg. 5	Tighten t_{CLZ}, t_{CHZ}, t_{OHZ}, t_{BHZ} and t_{WHZ}
08/22/01	Pg. 8	Removed footnote "available in 15ns and 20ns only"
06/20/02	Pg. 8	Added tape and reel field to ordering information
01/30/04	Pg. 8	Added "Restricted hazardous substance device" to ordering information.
09/27/06	Pg. 8	Corrected ordering information, changed position of I and G.
02/14/07	Pg.8	Added H step generation to data sheet ordering information.
06/26/07	Pg.3	Changed typical parameters for ICC, DC electrical characteristics table.
10/13/08	Pg.8	Removed "IDT" from orderable part number
10/11/11	Pg.1,8	Updated datasheet with removal of Obsolete HSA part number.
08/13/13	Pg.1,3,5,8	Added 10ns for Industrial Temperature range offerings.

CORPORATE HEADQUARTERS
6024 Silver Creek Valley Road
San Jose, CA 95138

for SALES:
800-345-7015 or
408-284-8200
fax: 408-284-2775
www.idt.com

for Tech Support:
sramhelp@idt.com
408-284-4532

The IDT logo is a registered trademark of Integrated Device Technology, Inc.

ООО «ЛайфЭлектроникс» “LifeElectronics” LLC

ИНН 7805602321 КПП 780501001 Р/С 40702810122510004610 ФАКБ "АБСОЛЮТ БАНК" (ЗАО) в г.Санкт-Петербурге К/С 30101810900000000703 БИК 044030703

Компания «Life Electronics» занимается поставками электронных компонентов импортного и отечественного производства от производителей и со складов крупных дистрибьюторов Европы, Америки и Азии.

С конца 2013 года компания активно расширяет линейку поставок компонентов по направлению коаксиальный кабель, кварцевые генераторы и конденсаторы (керамические, пленочные, электролитические), за счёт заключения дистрибьюторских договоров

Мы предлагаем:

- *Конкурентоспособные цены и скидки постоянным клиентам.*
- *Специальные условия для постоянных клиентов.*
- *Подбор аналогов.*
- *Поставку компонентов в любых объемах, удовлетворяющих вашим потребностям.*

- *Приемлемые сроки поставки, возможна ускоренная поставка.*
- *Доставку товара в любую точку России и стран СНГ.*
- *Комплексную поставку.*
- *Работу по проектам и поставку образцов.*
- *Формирование склада под заказчика.*

- *Сертификаты соответствия на поставляемую продукцию (по желанию клиента).*
- *Тестирование поставляемой продукции.*
- *Поставку компонентов, требующих военную и космическую приемку.*
- *Входной контроль качества.*
- *Наличие сертификата ISO.*

В составе нашей компании организован Конструкторский отдел, призванный помогать разработчикам, и инженерам.

Конструкторский отдел помогает осуществить:

- *Регистрацию проекта у производителя компонентов.*
- *Техническую поддержку проекта.*
- *Защиту от снятия компонента с производства.*
- *Оценку стоимости проекта по компонентам.*
- *Изготовление тестовой платы монтаж и пусконаладочные работы.*

Тел: +7 (812) 336 43 04 (многоканальный)
Email: org@lifeelectronics.ru

www.lifeelectronics.ru