Features

- **EE Reprogrammable 2,097,152 x 1 bit Serial Memories Designed to Store Configuration Programs for Field Programmable Gate Arrays (FPGAs)**
- **In-System Programmable via 2-wire Bus**
- **Simple Interface to SRAM FPGAs**
- **Compatible with Atmel AT6000, AT40K FPGAs, Altera FLEX® Devices, ORCA® FPGAs, Xilinx XC3000, XC4000, XC5200, Spartan®, Virtex® FPGAs**
- **Cascadable Read Back to Support Additional Configurations or Future Higher-density Arrays**
- **Low-power CMOS EEPROM Process**
- **Programmable Reset Polarity**
- **Available in PLCC Package (Pin Compatible across Product Family)**
- **Emulation of Atmel's AT24CXXX Serial EEPROMs**
- **Available in 3.3V ± 10% LV and 5V ± 5% C Versions**
- **System-friendly READY Pin**
- **Low-power Standby Mode**

Description

The AT17C020 and AT17LV020 (high-density AT17 Series) FPGA Configuration EEPROMs (Configurators) provide an easy-to-use, cost-effective configuration memory for Field Programmable Gate Arrays. The AT17 Series is packaged in the popular 20-pin PLCC. The AT17 Series family uses a simple serial-access procedure to configure one or more FPGA devices. The AT17 Series organization supplies enough memory to configure one or multiple smaller FPGAs. The user can select the polarity of the reset function by programming internal EEPROM bytes. These devices also support a system-friendly READY pin, which signifies a "good" power level to the FPGA and can be used to ensure reliable system power-up.

The AT17 Series Configurators can be programmed with industry-standard programmers or Atmel's ATDH2200E Programming System.

Pin Configurations

PLCC

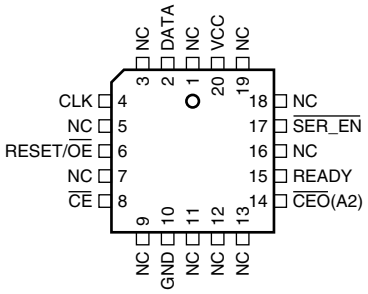

2-megabit FPGA Configuration EEPROM Memory

AT17C020
AT17LV020

Rev. 1239D–05/01

Block Diagram

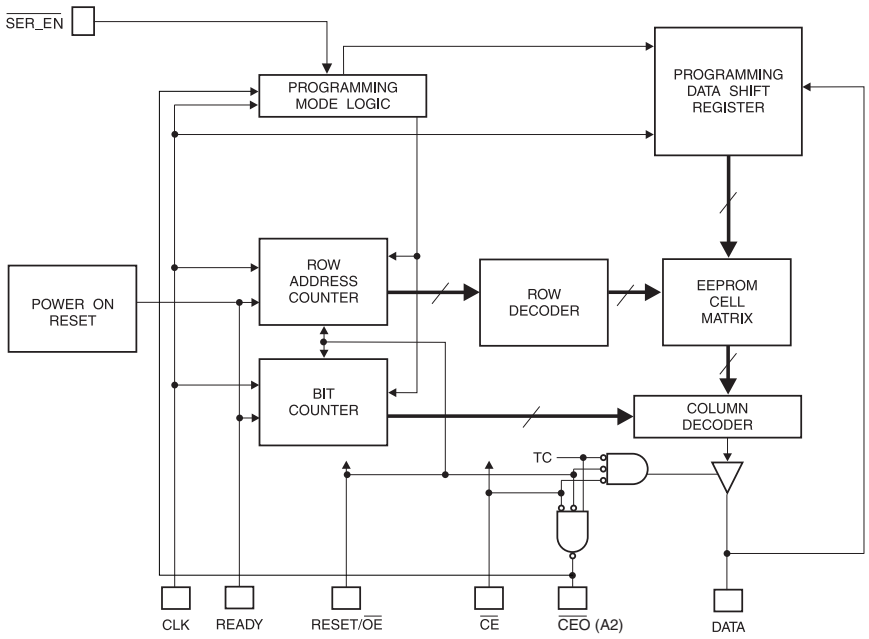

FPGA Master Serial Mode Summary

The I/O and logic functions of the FPGA and their associated interconnections are established by a configuration program. The program is loaded either automatically upon power-up, or on command, depending on the state of the FPGA mode pins. In Master Mode, the FPGA automatically loads the configuration program from an external memory. The AT17 Serial Configuration EEPROM has been designed for compatibility with the Master Serial Mode.

This document discusses the AT40K FPGA interface. For more details or AT6K FPGA applications, please reference “AT40K Series Configuration” or “AT6000 Series Configuration” application notes.

Controlling the High-density AT17 Series Serial EEPROMs During Configuration

Most connections between the FPGA device and the AT17 Serial EEPROM are simple and self-explanatory:

- The DATA output of the AT17 Series Configurator drives DIN of the FPGA devices.
- The master FPGA CCLK output drives the CLK input of the AT17 Series Configurator.
- The $\overline{\text{CEO}}$ output of any AT17C/LV020 drives the $\overline{\text{CE}}$ input of the next AT17C/LV020 in a cascade chain of EEPROMs.
- $\overline{\text{SER_EN}}$ must be connected to VCC, (except during ISP).

The READY pin is available as an open-collector indicator of the device’s RESET status; it is driven Low while the device is in its POWER-ON RESET cycle and released (tri-stated) when the cycle is complete.

There are two different ways to use the inputs $\overline{\text{CE}}$ and $\overline{\text{OE}}$.

Condition 1

The simplest connection is to have the FPGA $\overline{CON}$ pin drive both $\overline{CE}$ and RESET/$\overline{OE}$[1] in parallel. Due to its simplicity, however, this method will fail if the FPGA receives an external reset condition during the configuration cycle. If a system reset is applied to the FPGA, it will abort the original configuration and then reset itself for a new configuration, as intended. Of course, the AT17 Series Configurator does not see the external reset signal and will not reset its internal address counters and, consequently, will remain out of sync with the FPGA for the remainder of the configuration cycle.

Note: 1. For this condition, the reset polarity of the EEPROM must be set active High.

Figure 1. Condition 2 Connection

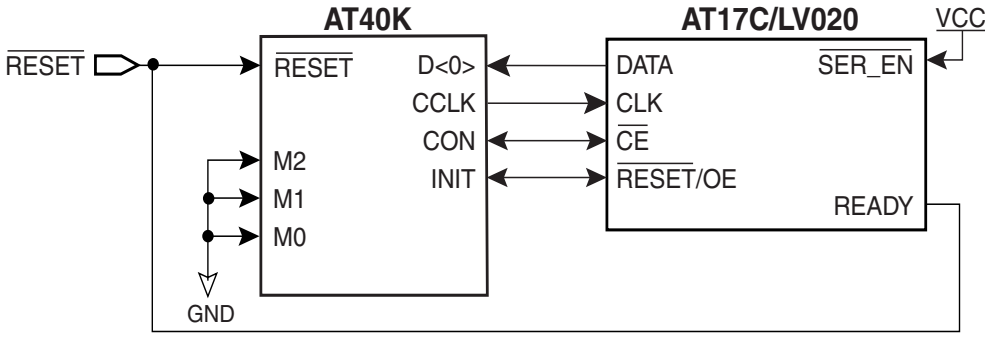

Notes: 1. Use of the READY pin is optional.
2. Reset polarity must be set to active Low.

Condition 2

The FPGA $\overline{CON}$ pin drives only the $\overline{CE}$ input of the AT17 Series Configurator, while the $\overline{OE}$ input is driven by the FPGA INIT pin (Figure 1). This connection works under all normal circumstances, even when the user aborts a configuration before $\overline{CON}$ has gone High. A Low level on the $\overline{RESET}$/OE[1] input – during FPGA reset – clears the Configurator's internal address pointer, so that the reconfiguration starts at the beginning.

Note: 1. For this condition, the reset polarity of the EEPROM must be set active Low.

The AT17 Series Configurator does not require an inverter for either condition since the RESET polarity is programmable.

Cascading Serial Configuration EEPROMs

For multiple FPGAs configured as a daisy-chain, or for future FPGAs requiring larger configuration memories, cascaded Configurators provide additional memory.

As the last bit from the first Configurator is read, the clock signal to the Configurator asserts its $\overline{CEO}$ output Low and disables its DATA line driver. The second Configurator recognizes the Low level on its $\overline{CE}$ input and enables its DATA output.

After configuration is complete, the address counters of all cascaded Configurators are reset if the RESET/$\overline{OE}$ on each Configurator is driven to its active (default High) level.

If the address counters are not to be reset upon completion, then the RESET/$\overline{OE}$ inputs can be tied to its inactive (default Low) level. For more details on programming the EEPROM's reset polarity, please reference "Programming Specification for Atmel's FPGA Configuration EEPROMs".

AT17 Series Reset Polarity

The AT17 Series Configurator allows the user to program the reset polarity as either RESET/$\overline{OE}$ or $\overline{RESET}$/OE. This feature is supported by industry standard programmer algorithms. For more details on programming the EEPROM's reset polarity, please ref-

erence the “Programming Specification for Atmel’s FPGA Configuration EEPROMs” application note.

Programming Mode

The programming mode is entered by bringing $\overline{\text{SER_EN}}$ Low. In this mode the chip can be programmed by the 2-wire serial bus. The programming is done at VCC supply only. Programming super voltages are generated inside the chip. See the “Programming Specification for Atmel's FPGA Configuration EEPROMs” application note for further information. The AT17C parts are read/write at 5V nominal. The AT17LV parts are read/write at 3.3V nominal.

Standby Mode

The AT17C/LV020 enters a low-power standby mode whenever $\overline{\text{CE}}$ is asserted High. In this mode, the Configurator consumes less than 0.5 mA of current at 5.0 volts with CMOS level inputs. The output remains in a high impedance state regardless of the state of the $\overline{\text{OE}}$ input.

Pin Configurations

20-pin PLCC	Name	I/O	Description
2	DATA	I/O	Three-state DATA output for configuration. Open-collector bi-directional pin for programming.
4	CLK	I	Clock input. Used to increment the internal address and bit counter for reading and programming.
6	RESET/$\overline{\text{OE}}$	I	RESET/Output Enable input (when $\overline{\text{SER_EN}}$ is High). A Low level on both the $\overline{\text{CE}}$ and RESET/$\overline{\text{OE}}$ inputs enables the data output driver. A High level on RESET/$\overline{\text{OE}}$ resets both the address and bit counters. The logic polarity of this input is programmable as either RESET/$\overline{\text{OE}}$ or $\overline{\text{RESET}}$/OE. This document describes the pin as RESET/$\overline{\text{OE}}$.
8	$\overline{\text{CE}}$	I	Chip Enable input. Used for device selection. A Low level on both $\overline{\text{CE}}$ and $\overline{\text{OE}}$ enables the data output driver. A High level on $\overline{\text{CE}}$ disables both the address and bit counters and forces the device into a low-power standby mode. Note that this pin will *not* enable/disable the device in the 2-wire Serial Programming Mode (i.e., when $\overline{\text{SER_EN}}$ is Low).
10	GND		Ground pin. A 0.2 µF decoupling capacitor between VCC and GND is recommended.
14	$\overline{\text{CEO}}$	O	Chip Enable Output. This signal is asserted Low on the clock cycle following the last bit read from the memory. It will stay Low as long as $\overline{\text{CE}}$ and $\overline{\text{OE}}$ are both Low. It will then follow $\overline{\text{CE}}$ until $\overline{\text{OE}}$ goes High. Thereafter, $\overline{\text{CEO}}$ will stay High until the entire EEPROM is read again.
	A2	I	Device selection input, A2. This is used to enable (or select) the device during programming (i.e., when $\overline{\text{SER_EN}}$ is Low; see the “Programming Specification” application note for more details).
15	READY	O	Open collector reset state indicator. Driven Low during power-up reset, released when power-up is complete. (Recommend a 4.7 KΩ pull-up on this pin if used).
17	$\overline{\text{SER_EN}}$	I	Serial enable must be held High during FPGA loading operations. Bringing $\overline{\text{SER_EN}}$ Low enables the 2-wire Serial Programming Mode.
20	VCC		+3.3V/+5V power supply pin.

Absolute Maximum Ratings*

Operating Temperature ..... -55°C to +125°C

Storage Temperature ..... -65°C to +150°C

Voltage on Any Pin
with Respect to Ground .....-0.1V to V_{CC} + 0.5V

Supply Voltage (V_{CC}) .....-0.5V to +7.0V

Maximum Soldering Temp. (10 sec. @ 1/16 in.).....260°C

*NOTICE: Stresses beyond those listed under Absolute Maximum Ratings may cause permanent damage to the device. These are stress ratings only, and functional operation of the device at these or any other conditions beyond those listed under Operating Conditions is not implied. Exposure to Absolute Maximum Ratings conditions for extended periods of time may affect device reliability.

Operating Conditions

Symbol	Description		AT17C020		AT17LV020		Units
			Min	Max	Min/	Max	
V_{CC}	Commercial	Supply voltage relative to GND, -0°C to +70°C	4.75	5.25	3.0	3.6	V
	Industrial	Supply voltage relative to GND, -40°C to +85°C	4.5	5.5	3.0	3.6	V
	Military	Supply voltage relative to GND, -55°C to +125°C	4.5	5.5	3.0	3.6	V

DC Characteristics

V_{CC} = 5V ± 5% Commercial, 5V ± 10% Industrial/Military

Symbol	Description		Min	Max	Units
V_{IH}	High-level input voltage		2.0	V_{CC}	V
V_{IL}	Low-level input voltage		0.0	0.8	V
V_{OH}	High-level output voltage (I_{OH} = -4 mA)	Commercial	3.86		V
V_{OL}	Low-level output voltage (I_{OL} = +4 mA)			0.32	V
V_{OH}	High-level output voltage (I_{OH} = -4 mA)	Industrial	3.76		V
V_{OL}	Low-level output voltage (I_{OL} = +4 mA)			0.37	V
V_{OH}	High-level output voltage (I_{OH} = -4 mA)	Military	3.7		V
V_{OL}	Low-level output voltage (I_{OL} = +4 mA)			0.4	V
I_{CCA}	Supply current, active mode			10.0	mA
I_L	Input or output leakage current (V_{IN} = V_{CC} or GND)		-20.0	20.0	µA
I_{CCS1}	Supply current, standby mode, CMOS	Commercial		0.5	mA
		Industrial/Military		0.75	mA
I_{CCS2}	Supply current, standby mode, TTL	Comm./Industrial		1.0	mA

DC Characteristics

V_{CC} = 3.3V ± 10%

Symbol	Description		Min	Max	Units
V_{IH}	High-level input voltage		2.0	V_{CC}	V
V_{IL}	Low-level input voltage		0.0	0.8	V
V_{OH}	High-level output voltage (I_{OH} = -2.5 mA)	Commercial	2.4		V
V_{OL}	Low-level output voltage (I_{OL} = +3 mA)			0.4	V
V_{OH}	High-level output voltage (I_{OH} = -2 mA)	Industrial	2.4		V
V_{OL}	Low-level output voltage (I_{OL} = +3 mA)			0.4	V
V_{OH}	High-level output voltage (I_{OH} = -2 mA)	Military	2.4		V
V_{OL}	Low-level output voltage (I_{OL} = +2.5 mA)			0.4	V
I_{CCA}	Supply current, active mode			5.0	mA
I_L	Input or output leakage current (V_{IN} = V_{CC} or GND)		-2.00	20.0	µA
I_{CCS}	Supply current, standby mode	Commercial		0.2	mA
		Industrial/Military		0.2	mA

AC Characteristics

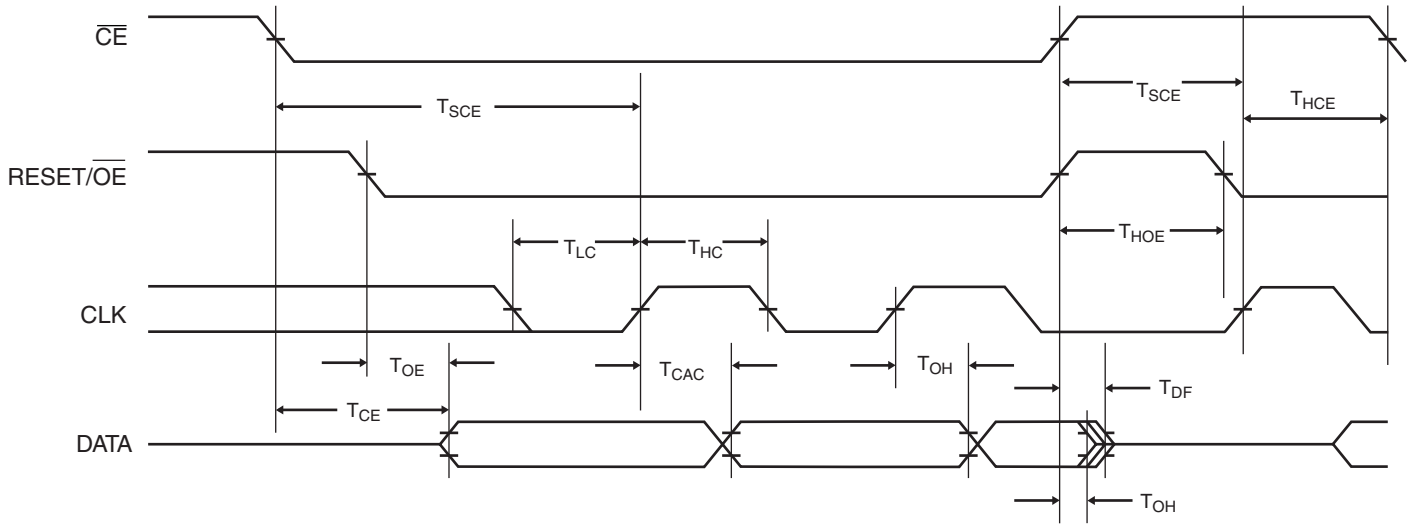

AC Characteristics When Cascading

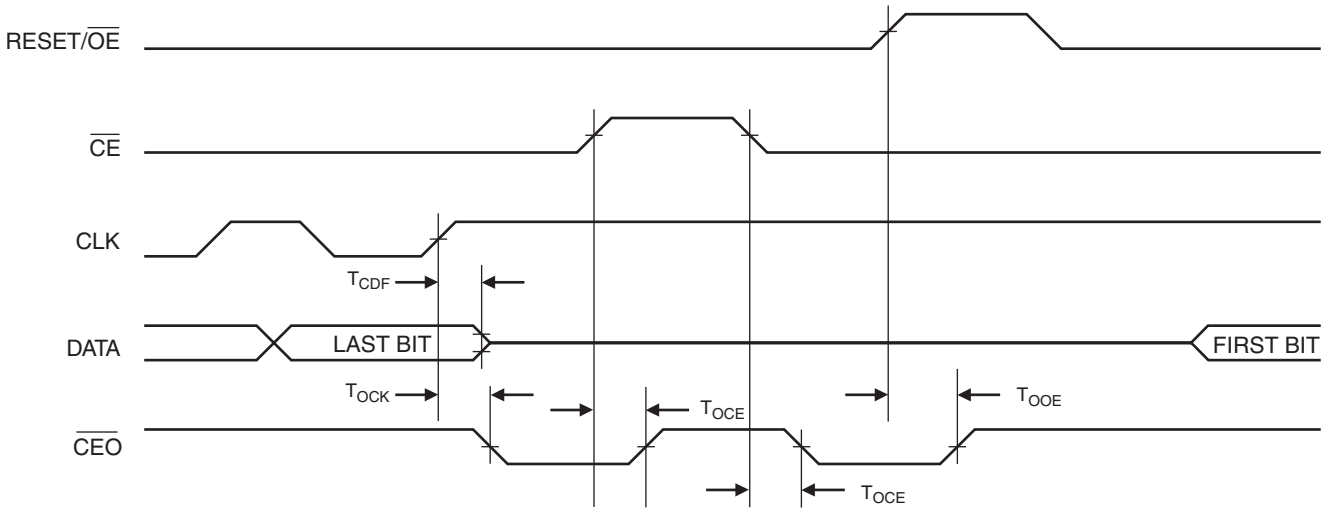

AC Characteristics for AT17C020

V_{CC} = 5V ± 5% Commercial, V_{CC} = 5V ± 10% Industrial/Military

Symbol	Description	Commercial		Industrial/Military[1]		Units
		Min	Max	Min	Max	
T_{OE}[2]	$\overline{OE}$ to Data Delay		30.0		35.0	ns
T_{CE}[2]	$\overline{CE}$ to Data Delay		45.0		45.0	ns
T_{CAC}[2]	CLK to Data Delay		50.0		50.0	ns
T_{OH}	Data Hold From $\overline{CE}$, $\overline{OE}$ or CLK	0.0		0.0		ns
T_{DF}[3]	$\overline{CE}$ or $\overline{OE}$ to Data Float Delay		50.0		50.0	ns
T_{LC}	CLK Low Time	20.0		20.0		ns
T_{HC}	CLK High Time	20.0		20.0		ns
T_{SCE}	$\overline{CE}$ Setup Time to CLK (to guarantee proper counting)	20.0		25.0		ns
T_{HCE}	$\overline{CE}$ Hold Time from CLK (to guarantee proper counting)	0.0		0.0		ns
T_{HOE}	$\overline{OE}$ High Time (guarantees counter is reset)	20.0		20.0		ns
F_{MAX}	MAX Input Clock Frequency	12.5		12.5		MHz

Notes:
1. Preliminary specifications for military operating range only.
2. AC test load = 50 pF.
3. Float delays are measured with 5 pF AC loads. Transition is measured ±200 mV from steady state active levels.

AC Characteristics for AT17C020 When Cascading

V_{CC} = 5V± 5% Commercial/V_{CC} = 5V ± 10% Industrial/Military

Symbol	Description	Commercial		Industrial/Military[1]		Units
		Min	Max	Min	Max	
T_{CDF}[3]	CLK to Data Float Delay		50.0		50.0	ns
T_{OCK}[2]	CLK to $\overline{CEO}$ Delay		35.0		40.0	ns
T_{OCE}[2]	$\overline{CE}$ to $\overline{CEO}$ Delay		40.0		80.0	ns
T_{OOE}[2]	RESET/$\overline{OE}$ to $\overline{CEO}$ Delay		30.0		30.0	ns
F_{MAX}	MAX Input Clock Frequency	12.5		12.5		MHz

Notes:
1. Preliminary specifications for military operating range only.
2. AC test load = 50 pF.
3. Float delays are measured with 5 pF AC loads. Transition is measured ±200 mV from steady state active levels.

AC Characteristics for AT17LV020

V_{CC} = 3.3V ± 10%

Symbol	Description	Commercial		Industrial/Military[1]		Units
		Min	Max	Min	Max	
T_{OE}[2]	$\overline{OE}$ to Data Delay		5.00		55.0	ns
T_{CE}[2]	$\overline{CE}$ to Data Delay		55.0		60.0	ns
T_{CAC}[2]	CLK to Data Delay		55.0		60.0	ns
T_{OH}	Data Hold From $\overline{CE}$, $\overline{OE}$ or CLK	0.0		0.0		ns
T_{DF}[3]	$\overline{CE}$ or $\overline{OE}$ to Data Float Delay		50.0		50.0	ns
T_{LC}	CLK Low Time	25.0		25.0		ns
T_{HC}	CLK High Time	25.0		25.0		ns
T_{SCE}	$\overline{CE}$ Setup Time to CLK (to guarantee proper counting)	30.0		35.0		ns
T_{HCE}	$\overline{CE}$ Hold Time from CLK (to guarantee proper counting)	0.0		0.0		ns
T_{HOE}	$\overline{OE}$ High Time (guarantees counter is reset)	25.0		25.0		ns
F_{MAX}	MAX Input Clock Frequency	12.5		7.5		MHz

Notes: 1. Preliminary specifications for military operating range only.
2. AC test load = 50 pF.
3. Float delays are measured with 5 pF AC loads. Transition is measured ±200 mV from steady state active levels.

AC Characteristics for AT17LV020 When Cascading

V_{CC} = 3.3V ± 10%

Symbol	Description	Commercial		Industrial/Military[1]		Units
		Min	Max	Min	Max	
T_{CDF}[3]	CLK to Data Float Delay		50.0		50.0	ns
T_{OCK}[2]	CLK to $\overline{CEO}$ Delay		50.0		55.0	ns
T_{OCE}[2]	$\overline{CE}$ to $\overline{CEO}$ Delay		40.0		80.0	ns
T_{OOE}[2]	RESET/$\overline{OE}$ to $\overline{CEO}$ Delay		35.0		35.0	ns
F_{MAX}	MAX Input Clock Frequency	12.5		7.5		MHz

Notes: 1. Preliminary specifications for military operating range only.
2. AC test load = 50 pF.
3. Float delays are measured with 5 pF AC loads. Transition is measured ±200 mV from steady state active levels.

Ordering Information - 5V Devices

Memory Size	Ordering Code	Package	Operation Range
2Mb	AT17C020-10JC	20J	Commercial (0°C to 70°C)
	AT17C020-10JI	20J	Industrial (-40°C to 85°C)

Ordering Information - 3.3V Devices

Memory Size	Ordering Code	Package	Operation Range
2Mb	AT17LV020-10JC	20J	Commercial (0°C to 70°C)
	AT17LV020-10JI	20J	Industrial (-40°C to 85°C)

Package Type	
20J	20-lead, Plastic J-leaded Chip Carrier (PLCC)

Packaging Information

20J, 20-lead, Plastic J-leaded Chip Carrier (PLCC)
Dimensions in Inches and (Millimeters)

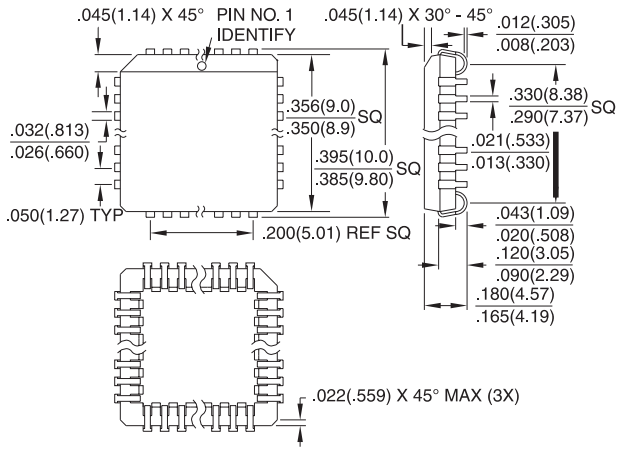

Atmel Headquarters

Corporate Headquarters
2325 Orchard Parkway
San Jose, CA 95131
TEL (408) 441-0311
FAX (408) 487-2600

Europe
Atmel SarL
Route des Arsenaux 41
Casa Postale 80
CH-1705 Fribourg
Switzerland
TEL (41) 26-426-5555
FAX (41) 26-426-5500

Asia
Atmel Asia, Ltd.
Room 1219
Chinachem Golden Plaza
77 Mody Road Tsimhatsui
East Kowloon
Hong Kong
TEL (852) 2721-9778
FAX (852) 2722-1369

Japan
Atmel Japan K.K.
9F, Tonetsu Shinkawa Bldg.
1-24-8 Shinkawa
Chuo-ku, Tokyo 104-0033
Japan
TEL (81) 3-3523-3551
FAX (81) 3-3523-7581

Atmel Operations

Atmel Colorado Springs
1150 E. Cheyenne Mtn. Blvd.
Colorado Springs, CO 80906
TEL (719) 576-3300
FAX (719) 540-1759

Atmel Rousset
Zone Industrielle
13106 Rousset Cedex
France
TEL (33) 4-4253-6000
FAX (33) 4-4253-6001

Atmel Smart Card ICs
Scottish Enterprise Technology Park
East Kilbride, Scotland G75 0QR
TEL (44) 1355-357-000
FAX (44) 1355-242-743

Atmel Grenoble
Avenue de Rochepleine
BP 123
38521 Saint-Egreve Cedex
France
TEL (33) 4-7658-3000
FAX (33) 4-7658-3480

Atmel Configurator Hotline
(408) 436-4118

Atmel Configurator e-mail
configurator@atmel.com

FAQ
Available on web site

Fax-on-Demand
North America:
1-(800) 292-8635
International:
1-(408) 441-0732

e-mail
literature@atmel.com

Web Site
http://www.atmel.com

BBS
1-(408) 436-4309

© Atmel Corporation 2001.
Atmel Corporation makes no warranty for the use of its products, other than those expressly contained in the Company's standard warranty which is detailed in Atmel's Terms and Conditions located on the Company's web site. The Company assumes no responsibility for any errors which may appear in this document, reserves the right to change devices or specifications detailed herein at any time without notice, and does not make any commitment to update the information contained herein. No licenses to patents or other intellectual property of Atmel are granted by the Company in connection with the sale of Atmel products, expressly or by implication. Atmel's products are not authorized for use as critical components in life support devices or systems.

FLEX is the registered trademark of Altera Corporation.

ORCA is the registered trademark of Lucent Technologies, Inc.

Spartan and Virtex are the registered trademarks of Xilinx, Inc.

Other terms and product names in this document may be trademarks of others.

Printed on recycled paper.

1239D–05/01/xM

ООО «ЛайфЭлектроникс» “LifeElectronics” LLC

ИНН 7805602321 КПП 780501001 Р/С 40702810122510004610 ФАКБ "АБСОЛЮТ БАНК" (ЗАО) в г.Санкт-Петербурге К/С 30101810900000000703 БИК 044030703

Компания «Life Electronics» занимается поставками электронных компонентов импортного и отечественного производства от производителей и со складов крупных дистрибьюторов Европы, Америки и Азии.

С конца 2013 года компания активно расширяет линейку поставок компонентов по направлению коаксиальный кабель, кварцевые генераторы и конденсаторы (керамические, пленочные, электролитические), за счёт заключения дистрибьюторских договоров

Мы предлагаем:

- *Конкурентоспособные цены и скидки постоянным клиентам.*
- *Специальные условия для постоянных клиентов.*
- *Подбор аналогов.*
- *Поставку компонентов в любых объемах, удовлетворяющих вашим потребностям.*

- *Приемлемые сроки поставки, возможна ускоренная поставка.*
- *Доставку товара в любую точку России и стран СНГ.*
- *Комплексную поставку.*
- *Работу по проектам и поставку образцов.*
- *Формирование склада под заказчика.*

- *Сертификаты соответствия на поставляемую продукцию (по желанию клиента).*
- *Тестирование поставляемой продукции.*
- *Поставку компонентов, требующих военную и космическую приемку.*
- *Входной контроль качества.*
- *Наличие сертификата ISO.*

В составе нашей компании организован Конструкторский отдел, призванный помогать разработчикам, и инженерам.

Конструкторский отдел помогает осуществить:

- *Регистрацию проекта у производителя компонентов.*
- *Техническую поддержку проекта.*
- *Защиту от снятия компонента с производства.*
- *Оценку стоимости проекта по компонентам.*
- *Изготовление тестовой платы монтаж и пусконаладочные работы.*

Тел: +7 (812) 336 43 04 (многоканальный)
Email: org@lifeelectronics.ru

www.lifeelectronics.ru