CONNECTORS

# Switchcraft®

## ENGINEERING DESIGN GUIDE

4th Edition

JACKS & PLUGS

JACK PANELS

PATCH CORDS & MOLDED CABLE ASSEMBLIES

SWITCHES

* Please visit the product pages on our website for the most up-to-date product information

Switchcraft

## ABOUT SWITCHCRAFT, INC.

Switchcraft, Inc. was established in 1946 to manufacture jacks, plugs and switches, from its original plant located on West Diversey Street in Chicago. The company moved to a larger facility at 1328 North Halsted Street in 1948, and in 1958, the operation moved to 5555 North Elston Avenue, which is still the headquarters of the corporation.

Switchcraft is a leading supplier of a broad line of components for the audio/video, broadcast, telecommunication, computer, medical, military, appliance, transportation and instrumentation industries.

In the 185,000-square-foot Chicago facility, Switchcraft manufactures electronic and elecromechanical components, including:

- Jacks
- Connectors
- Patch Panels
- Switches
- Molded Cable Assemblies
- Plugs
- Jackfields
- Patch Cords
- EAC Power Receptacles

With a basic line of over 5,000 standard products and thousands of variations, Switchcraft is proud to offer a limited lifetime warranty on all products.

Switchcraft markets products both domestically and internationally through a network of manufacturers' representatives and independent distributors.

In 1999, Switchcraft acquired the Conxall Corporation located in Villa Park, Illinois. Conxall was founded in 1971 as a manufacturer of sealed connectors for the marine industry. Today, the company offers a broad line of custom cable assemblies and connectors used in marine, industrial, sensor, communications and transportation applications. For more information contact Conxall at (630) 834-7504, or visit their website at www.conxall.com.

## LIMITED LIFETIME WARRANTY

Switchcraft warrants all of its products to be of sound design, good materials and workmanship at the time of manufacture.

Switchcraft will repair or replace at its discretion any product proven to be defective under normal use.

Switchcraft's liabilty under the terms of this warranty is limited to the repair or replacement of defective products which have not been damaged through accident, abuse, misuse or unauthorized repair. Switchcraft shall in no case be liable for special or consequential damages of any nature.

## CATALOG SECTIONS


**Connectors . . . . . 1-78**

**Jacks & Plugs . . . . . 79-162**

**Jack Panels . . . . . 163-238**

**Patch Cords and Molded Cable Assemblies . . . . . 239-268**

**Switches . . . . . 269-318**

**Index by Part Number . . . 319-328**


**Visit us on the net:**

**www.switchcraft.com**

PHONE: 773 792-2700

* Please visit the product pages on our website for the most up-to-date product information

Switchcraft® TABLE OF CONTENTS

## CONNECTORS AND RECEPTACLES


Q-G® XLR CONNECTORS....1-30
- Q-G® Connector Part Numbering System....2
- Professional Series Q-G® Connector Part Numbering System....2
- Q-G® Audio Connectors A, AA, AND QGP Series....3-4
- Part Numbers - Male Cord Plugs/Female Cord Plugs....4
- Q-G® Color Flex Reliefs/Flex Relief....5
- AAA XLR Connectors....6-7
- P(*)M Gooseneck Plug, P(*)F Microphone Plug, R(*)MZ Cord Plug, R(*)FZ Cord Plug....8
- D(*)M, D(*)F and D(*)FD Receptacles....9
- T(*)F and T(*)FM Cord Plug With On-Off Switch....9
- B(*)F Receptacle, C(*)F Receptacle, B(*)M Receptacle, C(*)M Receptacle....10
- E Series Receptacles....11-15
- EH Series Receptacles....16
- PQG® Receptacles....17-18
- PD Series - Plastic Panel Mount....19-21
- Y3F, Y3FPC, Y3FDPC and Y3MPC Receptacles....22
- F Series Receptacles....23-24
- Q-G® Adapters, Accessories....25
- Q-G® Wall Plate Receptacles....26
- Q-G® Connector-Adapters....27-28
- S*FM Audio Connector-Adapter....28
- Audio "Y" Adapters....28
- DMX Adapter....29
- Q-G® Connector-Adapter Receptacles....30
- Z Matching Transformers, Series M(*)M, Series L(*)MN....30

TINI Q-G® MINIATURE CONNECTORS....31-37
- Tini Q-G® Audio Adapters....31
- TB(*)M AND TB(*)MB Receptacle,TLP(*) Looping Plug, Straight Female Looping Plug, Reverse Gender TQG Series....33
- TRA(*)M PC Mount Male Receptacle....34
- TRASM*M, TRAPC*M Series....34-36
- TY(*)F and TY(*)FPC Receptacles,TYEF Escutcheons, TQG(*)F and TQG(*)M Connector Inserts, TBA(**) Audio Adapter....37

HPC HIGH POWER AUDIO CONNECTORS....38-40

EN3TMini WEATHERTIGHT CONNECTOR SERIES....41-45
- 2 - 8 pin Cord Connector, 9 - 18 pin Cord Connector....43
- 2 - 8 pin Panel Connector, 9 - 18 pin Panel Connector....44
- 2 - 8 pin Inline Connector, 2 - 8 pin Overmolded Cord and Inline Connector....45

DIN CONNECTORS....46-55
- Plugs....46-48
- Panel Mount Receptacles....48-50
- Right Angle PC Mount Receptacles....51-52
- Mini-DIN Right-Angle Receptacles, Right-Angle, PC Mount Receptacles....47-53
- SMD Series....54
- DMD Series....55

USB CONNECTORS....56-57

IEEE 1394 FIREWIRE CONNECTORS....58-59

SLIM-LINE CONNECTORS....60-64
- Cord Plugs....60
- Slim-Line Connector Part Numbering System, Cable Clamp and Strain Relief....61
- SL40-SL41 Male/Female Cord Plugs....62
- SL10-SL17 Male/Female Receptacles....63
- SL18 Male/Female Receptacles....64

CB CONNECTORS MICROPHONE CONNECTORS, MINI-CON MINIATURE CONNECTORS....65

HP75BNC SERIES BNC CONNECTORS....66-67

EAC RECEPTACLES....68-77

RAPC322 POWER INLET SOCKET....78


## JACKS AND PLUGS


JACK SCHEMATICS....79-80

1/4" LONG FRAME TELEPHONE JACKS....81-85
- 1/4" Jack Blocks....86

BANTAM TYPE® JACKS....87-90
- TT-JAX® (.173") Telephone Jacks Bantam Type®....87-88
- TT-JAX® (.173") Telephone Twin Jacks Bantam Type®....89
- TT-JAX® (.173") Telephone Triple Jacks Bantam Type®....90
- RTT Series Miniature Telephone Jacks, Right Angle, PC Mount....91-92
- .177" Enclosed Jacks....93

LITTEL JAX® 2- AND 3-CONDUCTOR, 1/4" PHONE JACKS....94-109
- Hi-D Jax® 2- and 3-Conductor....96-99
- Spring Lock PC Terminals for Hi-D Jax®....100
- SN Series, RA Series Right-Angle Phone Jacks....101-105
- 500 Series Jack Covers....106
- Series E (Locking) and Thick Panel Phone Jacks....107
- 1/4" Extension Jacks and 1/4" Speaker Jacks....108
- 1/4" Shielded Phone Jacks, SF-Jax® Short Frame Jacks....109

.141" MINIATURE PHONO JACKS....109-111

3.5MM DUAL STEREO JACK....112-113

3.5MM SINGLE MONO AND STEREO JACKS....114-118

3.5MM SINGLE MONO JACKS....119

2.5MM SINGLE MONO AND STEREO JACKS....120

.101" SUBMINIATURE PHONE JACKS....121-122

RCA PHONO JACKS AND PHONO JACK SETS....123-129

RIGHT ANGLE MINIATURE POWER JACKS....130-133

STRAIGHT MINIATURE POWER JACKS....134-135

VJ SERIES VIDEO JACKS....136

MVJ SERIES VIDEO JACKS....137

MIL-TYPE 1/4" PHONE PLUGS....138-141
- Littel Plug® Phone Plugs....139

MIL-TYPE 1/4" EXTENSION JACKS....142




® Registered trademark of Switchcraft, Inc.

Note: Contact your Switchcraft Representative for price and delivery

* Please visit the product pages on our website for the most up-to-date product information

TELEPHONE PATCH ADAPTERS .....142

BANTAM TYPE MINIATURE TELEPHONE PLUGS .....143-144

1/4" COMMERCIAL PHONE PLUGS - LITTEL-PLUG® PLUGS .....145-147
- Silent-Plug And Lug® Phone Plugs .....148
- Audio Loudspeaker and Heavy Duty 1/4" Commercial Phone Plugs .....149-150
- .206" Commercial Phone Plugs .....151
- 1/4" Miti-Plug® Audio Plugs .....152
- 1/4" Flat Plug Phone Plugs .....153
- Right-Angle Phone Plugs .....154
- 1/4" Lock-Extension Jacks And Plugs .....155

3.5MM HEAVY DUTY STEREO PLUGS .....156

.141" MINIATURE PHONE PLUGS .....157

.097" SUBMINIATURE PHONE PLUGS .....158

AUDIO ADAPTERS .....159

RCA PHONO PLUGS .....160-161

MINIATURE POWER PLUGS .....162

## JACK PANELS, PATCH PANELS, PATCH KITS AND JACKFIELDS

AUDIO PATCHBAYS .....163-190
- Professional Punchdown Terminal (PPT) .....163
- Front Access MTPFA/TTPFA Series .....164-165
- MTP48K Wired Audio Series .....166-167
- TTP96K Wired Audio Series .....168-169
- MTPH/TTPH Harness Audio Series .....170-173
- MTPBP/TTPBP Backpanel Series .....174-175
- EZ NORM Patchbay Series .....176-177
- TT96 EDAC Series .....178-179
- TTP96K Patchkit Series .....180-181
- MT48K/MT52K Patchkit Series .....182-183
- MT48/MT52 Patchbay Series .....184-185
- TTP96AS Patchbay Series .....186-187
- Q-G®XLR Patchbay Series .....188-189
- HPC Patchbay Series .....190

RS 422 DATA PATCHBAY SERIES .....191-192

VIDEO PATCHBAYS .....193-201
- VPP Video Patchbay Series .....193-195
- MVP Midsize Video Patchbay Series .....196-198
- VAP Video/Audio Patchbay Series .....199-200
- MBPK Video/Audio Patchbay Series .....201

TELECOM TYPE JACK PANELS .....202-238
- Long Frame (1/4")Single Row Telephone Jack Panels ....202- 203
- Long Frame (1/4") Twin Row Jack Panels .....204-205
- Long Frame (1/4") Modular Twin Row Jack Panels .....206-209
- Long Frame (1/4") Modular 3 Row Jack Panels .....210
- TT-Jax® (.173") Jack Panel Series 1600, A1600, B1600, C1600 .....211-214
- Modular TT-JAX® (.173") Panels - Blank Series TT51, TT53, TT56, TT59 .....215
- TT Module Inserts - Series TT91, TT92 And TT93 .....216
- Modular TT-Jax® (.173") Jack Panels -Series TT5102000, TT5202000, TT5502000, TT5602000 .....217-218
- TT-Jax® (.173") Twin Row and Three Row Jack Panels ....219-220
- TT-Jax® (.173") Connectorized Jackfields - Series TT, 2-wire, 4-wire, 6-wire .....221-229
- TT® Lamps and Jewel Assemblies .....230
- Longframe Switchboard Switches .....231
- Dummy Plugs and Hole Plugs .....232
- TT® (Bantam) Circuit Guard Plugs .....233
- Miniature, Dummy Plugs, Hole Plugs .....234
- Designation Strips .....235-236
- Kwik-Change® Designation Strips (Double Height) .....237
- X-Wide® Vertical Designation Strips .....238

## PATCH CORDS AND MOLDED CABLE ASSEMBLIES

MOLDED CABLE ASSEMBLIES .....239-261
- Design Materials and Features .....239
- 3.5MM Molded Cables .....240
- Power-Plug Battery Charger Plugs and Jacks .....241
- Power Plugs and Jacks Part Numbering System .....242
- EN3T MINI Weathertight Overmolded Cable Assemblies .....243
- Cordette® and Cord Switch Assemblies .....44
- Cordette® Switches .....245
- DIN Plugs .....246-248
- MIDI Cables .....249
- Miniature, Shielded, Molded Tini Q-G® Plugs .....250
- Molded Cable Assemblies for Multi-Pin Interconnection Part Numbering System .....251
- Standard Multi-Pin Interconnection Cables .....252
- Micro Plug® Subminiature Phone Plugs .....253
- Tini Plug® Miniature Phone Plugs .....254
- Phono Plugs and Phono Extension Jacks .....255
- Tini-Extension® Jacks .....256
- Littel Plug® Phone Plugs .....256-257
- Extension Jax® Phone Jacks .....257
- Cable Clamp Bands, “Y” Junctions .....258
- Part Numbering System .....259
- Standard Cable Guide .....260
- Cross Reference Guide .....261

AUDIO/VIDEO PATCHCORDS .....262- 267
- 1/4" Longframe Telephone Patch Cords, MIL Type 1/4" Patch Cords .....262
- Combination Patch Cords and MIL Type 1/4" Twin Patch Cords .....263
- Miniature TT® Braided Patch Cords .....264
- Miniature TT® Molded Patch Cords and Telephone Couplers .....265
- Video Patch Cords .....266
- Broadcast Series 3-Conductor Bantam TT Patch Cords, Analog-AES/EBU Audio, and RS422 Patching .....267

## SWITCHES

PUSHBUTTON SWITCHES
- IBS Series Miniature Keyboard Switches .....269
- IBS Keyboard Switch Pushbuttons .....270
- US Series Uniswitch® Switches .....271
- BXR Series Box Switch® Switches .....272
- Button-Switch® Switches, Tini-Switch® Switches .....273
- Littel-Switch® Switches .....274
- Hi-D Switch® PC Mount Switches, DA-Switch Switches .....275
- Cord-Switch® Cord Switches, Cordette® Cord Switches .....276

* Please visit the product pages on our website for the most up-to-date product information

Push-Lite® Switches and Indicators .....277-281
Series PL9000 - PL® Indicators, Pushbutton/Indicator Screens, Color Filter Snap-Insserts, Optional Mounting Barriers, Light Divider .....278
Part Numbering System .....279
Outline Dimensions .....280-281

SLIDE SWITCHES .....282-290
General Purpose Slide Switches .....284-287
Miniature Slide Switches .....288-290
Side-Slide®/Miniature Slide Switches .....290
European Line Voltage Selector Switches .....291-293

LEVER SWITCHES .....294-298

GENERAL PURPOSE STACK SWITCHES .....299-300

MULTIPLE STATION SWITCHES .....301-302
Littel® Multi Switch .....303-308
DW Multi-Switch .....309-311
Tini® DW Multi-Switch .....312-313
IBS Multi-Switch - Series IBS .....314-315
Multi-Switch Pushbuttons .....316-317

INDEX BY PART NUMBER .....319-328





® Registered trademark of Switchcraft, Inc.
Note: Contact your Switchcraft Representative for price and delivery

* Please visit the product pages on our website for the most up-to-date product information

# Q-G® CONNECTORS

**SECTIONALIZED VIEW - A3F Plug to B3M Receptacle**

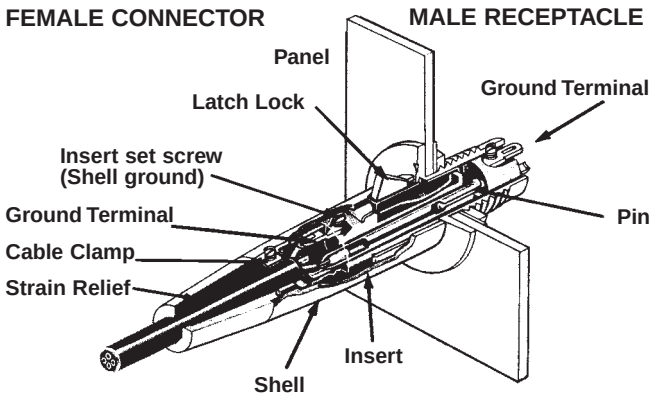


## DESIGN FEATURES

**CONSTRUCTION:** Sturdy, die-cast zinc with satin nickel finish or Black-Velvet® finish to withstand hard use – even abuse. Vel-Tone non-reflective finish on QGP connectors only.

**INSERT INSULATION:** High-impact, molded thermoplastic provides high dielectric strength, and superior insulation resistance.

**LOCKING:** Latchlock on female plugs and receptacles locks into groove in mating male connector to prevent accidental disconnect. Manual release of latchlock is required to separate connectors. Q-G connectors are also available with FAS-DISCONNECT detent in place of latchlock. QGP has die-cast latchlock.

**FAS-DISCONNECT:** FAS-DISCONNECT detent permits immediate disconnect of locked connectors with a 4-pound (1.8 kg) force. FAS-DISCONNECT connectors are not recommended for use in situations where strong or violent pulls on cable may occur and cause accidental disconnect. Available on Q-G connectors only.

**DUAL PRESSURE PLATES:** A*F and A*M Series provides secure cable lock and strain relief for all standard size cables.

**FLEX RELIEF:** TPR cable flex relief bushings on cord plugs are keyed to shell. Standard bushing opening accepts cables from .21" to .3" diameter Bushings with other openings accommodate cables from .105" to .205" diameter and from .3" to .328" diameter.

**CONTACTS:** Q-G female connectors are copper alloy, silver-plated, tarnish-resistant; male contacts are copper alloy, silver-plated, tarnish-resistant. Gold-plated female contacts are copper alloy. Male contacts are gold-plated.

**WIRING:** Large, unique design solder cups make wiring fast and easy. Certain receptacles are also available with PC terminals for use with printed circuit boards.

**Grounding and Shielding**
Tightening the insert screw establishes continuity between ground terminal, ground contactors and connector housing. Upon engagement with a mating plug or receptacle, the ground circuit is automatically connected to the mating shell through the ground contactor. Any pin or contact can be grounded by "jumping" it to the ground terminal. Contact 1 engages before all other contacts and disengages after all other contacts.

Field-proven Switchcraft Q-G® (Quick-Ground) 3- through 7-contact audio connectors with ground terminal and ground contactors are available in a wide range of plugs and receptacles for microphones, test equipment, instrumentation, computers, video cameras, mixing consoles, tape recorders, PA and sound reinforcement, stereo systems and many more applications.
Switchcraft Q-G® connectors feature a separate ground-terminal electrically integral with connector shell. Ground continuity between mating plugs is automatically accomplished through exclusive "Dual Point" grounding system. Socket and pin assemblies utilize "wedge-action" to insure firm, reliable positioning in connector shell. Inserts are easily removable for wiring and soldering. High-impact thermoplastic insures long reliable insert assembly life. Female connectors have latch lock feature to hold connectors firmly together. Plugs and receptacles are mechanically keyed for proper mating. Q-G (*) Series 3-, 4-, 5-, 6-, and 7-pin/contact connectors offer 4-, 5-, 6-, 7-, and 8-pin contact versatility when ground-terminal is used. Switchcraft QGP connectors; are compatible with 3- and 4-contact (Neutrik, Amphenol 91-850 and Excellite 91-450 Series, and Cannon XLR-3, XLR-4): 5-contact (Neutrik, Cannon XLR-5 and Amphenol Excellite 91-450 Series).

**Captive Design® Insert Screws**

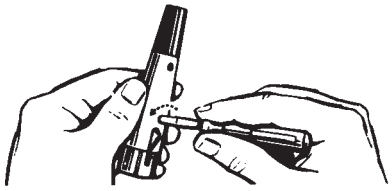

Insert screw engages as any conventional screw, except it is lefthand threaded. To disassemble the connector, turn screw counterclockwise down into insert (see illustration).

Insert assembly is now readily removed from shell. Note "Ground Terminal" area – large soldering cups make cable installation fast and easy. Unitized 1-piece insert eliminates possible loss of latchlock and spring.

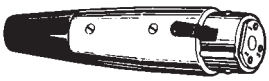

To reassemble, replace insert assembly into shell, align insert screw under hole in shell and secure insert by turning insert screw clockwise. This "wedges" insert against interior of shell providing a rigid connector assembly and positive electrical continuity between ground terminal and shell (see illustration).

DIMENSIONS ARE FOR REFERENCE ONLY Inch (mm)

* Please visit the product pages on our website for the most up-to-date product information



## Q-G® CONNECTOR PART NUMBERING

| Series | | Number of Contacts | Gender | Options | |
|---|---|---|---|---|---|
| A | CORD PLUG WITH SCREW CABLE CLAMP | 3-7 | M MALE | D | FAS-DISCONNECT (FEMALE CONNECTORS) |
| AA | CORD PLUG WITH CRIMP CABLE CLAMP | | F FEMALE | B | BLACK EPOXY FINISH |
| AAA | CORD PLUG WITH TWIST ON HANDLE | | | | |
| B | FRONT PANEL MOUNT USING NUT | | FM BOTH (S SERIES) | ST | STRAIGHT PC TAILS |
| C | FRONT PANEL MOUNT - CIRCULAR | | | RA | RIGHT ANGLE PC TAILS |
| D | FRONT PANEL MOUNT - RECTANGULAR | | | M | MOMENTARY SWITCH ACTION (T SERIES ONLY) |
| E | MODULAR FRONT PANEL MOUNT | | | PC | PC TERMINALS (Y SERIES ONLY) |
| G | WALL PLATE - 1 B SERIES MALE | | | N | KNURLED COUPLING NUT (L SERIES ONLY) |
| H | WALL PLATE - 2 B SERIES MALES | | | L | FLEX RELIEF FOR .250" TO .328" CABLE O.D. |
| J | WALL PLATE - 1 D SERIES FEMALE | | | S | SEE NOTE 1. |
| K | WALL PLATE - 2 D SERIES FEMALE | | | AU | GOLD CONTACTS |
| L | MICROPHONE ADAPTER - INTERNAL THREAD | | | H | HOUSING ONLY |
| M | MICROPHONE ADAPTER - EXTERNAL THREAD | | | OPTIONS SHOWN IN ORDER OF APPEARANCE | |
| N | CAP PLUG | | | Z | SCREWLESS STRAIN RELIEF |
| P | GOOSENECK MOUNT | | | | |
| QG | CONNECTOR INSERT | | | | |
| R | RIGHT-ANGLE CORD PLUG | | | | |
| S | MALE/FEMALE BARREL ADAPTER | | | | |
| T | CORD PLUG WITH ON-OFF SWITCH | | | | |
| W | RIGHT-ANGLE PANEL MOUNT | | | | |
| Y | REAR PANEL MOUNT | | | | |

NOTE 1: S HAS DIFFERENT DESIGNATIONS DEPENDING ON THE SERIES.
FOR A, AA, AND T SERIES: SMALL FLEX RELIEF FOR .105" TO .205" CABLE OUTSIDE DIAMETER
FOR B, C, AND D SERIES: SANDED FRONT FACE FINISH
FOR G, H, J, AND K SERIES: STAINLESS STEEL WALL PLATE (STANDARD)
FOR N SERIES: SHORTING WIRING INSTALLED
NOTE 2: J, K AND T SERIES AVAILABLE IN FEMALE GENDER ONLY.
G, H, L, M, N, AND W SERIES AVAILABLE IN MALE GENDER ONLY.

## PROFESSIONAL SERIES Q-G® CONNECTOR PART NUMBERING SYSTEM

| Series | | Number Of Contacts | Model | |
|---|---|---|---|---|
| | PROFESSIONAL SERIES | 3 | 22 | FEMALE CORD PLUGS |
| QGP | PROFESSIONAL SERIES CORD PLUG WITH CRIMP CABLE CLAMP | | 23 | MALE CORD PLUGS |
| AQGP | | | 62 | RECTANGULAR FEMALE PANEL MOUNT |
| | | | 63 | RECTANGULAR MALE PANEL MOUNT |

DIMENSIONS ARE FOR REFERENCE ONLY Inch (mm)



® Registered trademark of Switchcraft, Inc.
Note: Contact your Switchcraft Representative for price and delivery

* Please visit the product pages on our website for the most up-to-date product information

# Q-G ® CORD PLUG CONNECTORS (continued)

## Q-G® AUDIO CONNECTORS A, AA, AND QGP SERIES

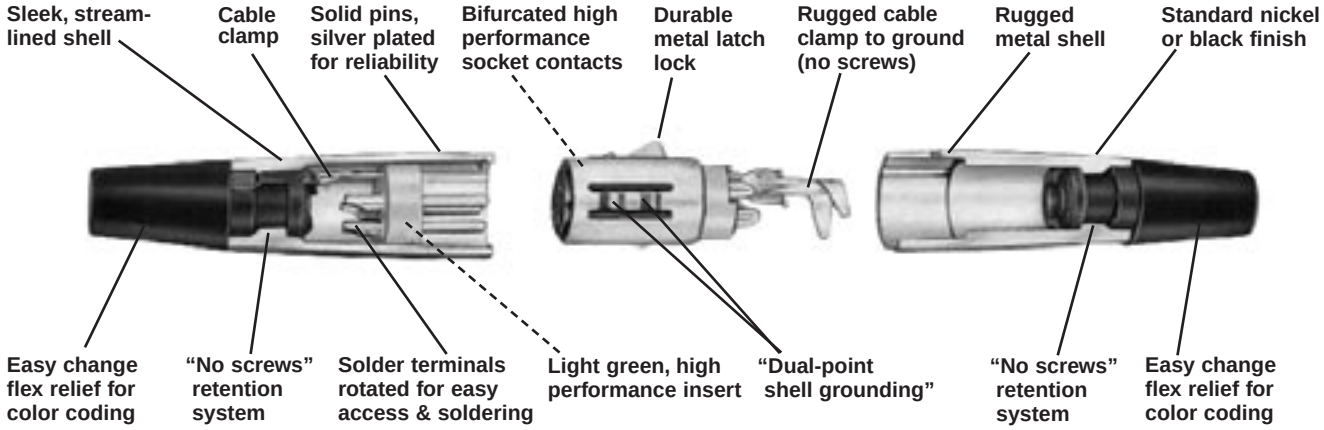


QGP connectors (3 contacts only) feature Vel-Tone® non-reflective finish, gray TPR flex relief and plated pins/contacts for the most demanding applications.
Preferred by audio professionals the world over, Switchcraft® QG® connectors feature unsurpassed durability and a choice of finishes and contact platings. Features include:

- High performance inserts in traditional Switchcraft® green or black.
- Solder terminals rotated for easier access and soldering.
- All metal housing.

**AA Series Only**

- Rugged 1-piece cable clamp to relieve pulling and twisting stresses on terminations.
- No Screws flex relief retention system.
- Integral bump shell grounding system.

### SPECIFICATIONS

**ELECTRICAL**

**Contact Resistance:** 50 milliohm maximum, per pole.
**Current Rating:** 3 pole – 15A, 4 pole - 10A, 5 and 6 pole – 7.5A, 7 pole – 5A @ 125VAC.
**Insulation Resistance:** 1,000 MΩ, minimum.
**Dielectric Withstanding Voltage:** 1,000 V (rms).
**Capacitance:** 2 pF between pins and 4 pF between pins and shell, maximum (AA3M and AA3F).

**MECHANICAL**

**Insertion/Withdrawal Forces:** 7 pound maximum, 5 pound nominal, insertion; 7 pound maximum, 5 pound nominal, withdrawal.
**Wire Size:** #12 wire gauge solid; #14 wire gauge stranded (3 contact). #14 wire gauge solid; #16 wire gauge stranded (4 contact). #16 wire gauge solid; #18 wire gauge stranded (5 and 6 contact). #18 wire gauge solid; #20 stranded (7 contact). (Q-G and QGP).

### MATERIAL
### Q-G CONNECTORS (A AND AA SERIES)

**Shell:** Die-cast zinc. Satin nickel finish, black velvet.
**Insert Insulation:** Molded thermoplastic.
**Socket Contacts:** Silver-plated copper alloy tarnish-resistant; bifurcated on 3-contact type. Gold is available
**Pin Contacts:** Silver-plated copper alloy. Resists tarnishing, and provide excellent electrical conductivity. Gold is available.
**Latchlock:** High-strength die-cast zinc.
**Latch Release:** Steel, nickel-plated.
**Latch Detent:** Formed stainless steel.
**Insert Screw:** Stainless steel.
**Flex Relief:** TPR (thermoplastic rubber).

### QGP CONNECTORS

**Shell:** Die-cast zinc, non-reflective gray Vel-Tone® finish.
**Socket Contacts:** Gold-plated copper alloy
**Pin Contact:** Gold-plated copper alloy

FACE VIEW OF PIN (MALE) INSERTS

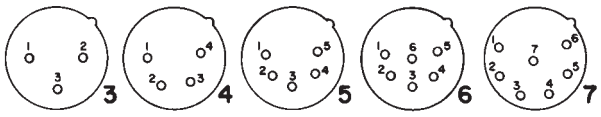


INSERT CONFIGURATIONS

DIMENSIONS ARE FOR REFERENCE ONLY Inch (mm)

* Please visit the product pages on our website for the most up-to-date product information

# Q-G® CORD PLUG CONNECTORS (continued)

## AA(*)F CORD PLUG

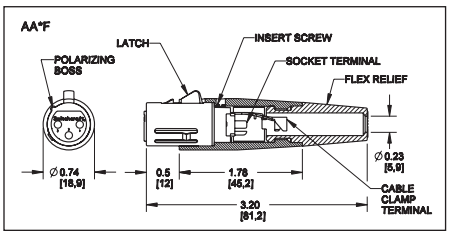


## AA(*)FD CORD PLUG

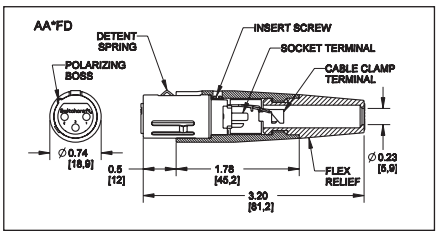


## AA(*)M CORD PLUG

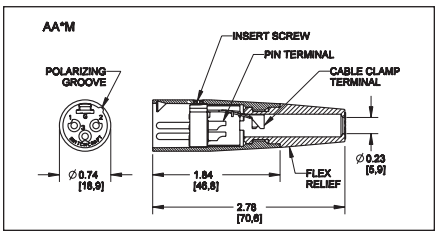


### PART NUMBERS - FEMALE CORD PLUGS

| Advanced Q-G® Cord Plugs, Series AA(*)F and AQGP | | | | | | |
|---|---|---|---|---|---|---|
| AA3F | AA3FB | ◊AA3FBAU | ◊AA3FD | ◊AA3FL | ◊AQGP322 | 3 |
| — | — | — | AA3FLD | | — | 3 |
| ◊AA4F | ◊AA4FB | — | ◊AA4FD | ◊AA4FL | — | 4 |
| ◊AA5F | ◊AA5FB | — | ◊AA5FD | ◊AA5FL | — | 5 |
| ◊AA6F | ◊AA6FB | — | ◊AA6FD | ◊AA6FL | — | 6 |
| ◊AA7F | ◊AA7FB | — | ◊AA7FD | ◊AA7FL | — | 7 |

◊ Available on special order only; contact Switchcraft for price and delivery.

### PART NUMBERS - MALE CORD PLUGS

| Advanced Q-G® Cord Plugs, Series AA(*)M and AQGP | | | | | |
|---|---|---|---|---|---|
| AA3M | AA3MB | ◊AA3MBAU | ◊AA3ML | ◊AQGP323 | 3 |
| ◊AA4M | — | — | ◊AA4ML | — | 4 |
| ◊AA5M | ◊AA5MB | — | ◊AA5ML | — | 5 |
| ◊AA6M | — | — | ◊AA6ML | — | 6 |
| ◊AA7M | — | — | ◊AA7ML | — | 7 |

All above part numbers have black flex relief installed. Contact Switchcraft for color flex relief.

## A(*)F CORD PLUG

Straight female cord plug with standard latchlock. Available in 3-7 pin versions.

## A(*)FD CORD PLUG

*Number of insert contacts or pins must be specified to complete part number.

Straight female cord plug with FAS-DIS-CONNECT detent.

## A(*)M CORD PLUG

Straight male cord plug.

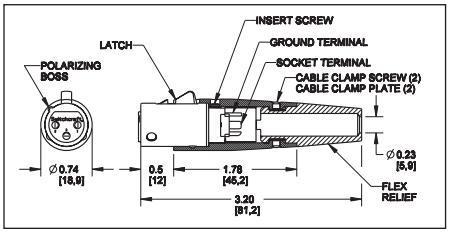


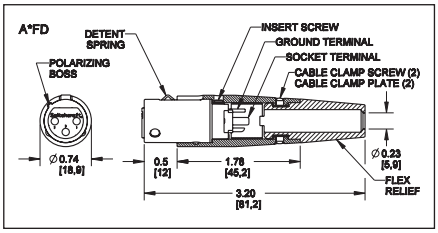


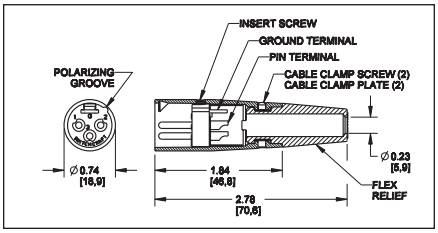


### PART NUMBERS - FEMALE CORD PLUGS

| Standard Q-G® Cord Plugs, Series A(*)F and QGP | | | | | | |
|---|---|---|---|---|---|---|
| Satin Nickel Finish Contacts | Black Finish | | Fas-Dis-Connect | Large Flex Relief [2] | QGP Series | Insert |
| | Silver [1] | Gold [1] | | | | |
| A3F | A3FB | A3FBAU | ◊A3FD | A3FL | QGP322 | 3 |
| A3FS[3] | — | — | — | — | — | 3 |
| A4F | A4FB | A4FBAU | ◊A4FD | A4FL | — | 4 |
| A5F | A5FB | A5FBAU | ◊A5FD | ◊A5FL | — | 5 |
| A6F | A6FB | A6FBAU | — | — | — | 6 |
| A7F | A7FB | A7FBAU | — | — | — | 7 |

1. Contact plating.
2. Accepts cables from .25" (6.35 mm) to .328" (8.33 mm) diameter
3. Accepts cables from .105" (2.7 mm) to .205" (5.2 mm)

◊ Available on special order only; contact Switchcraft for price and delivery.

### PART NUMBERS - MALE CORD PLUGS

| Standard Q-G® Cord Plugs, Series A(*)M and QGP | | | | | |
|---|---|---|---|---|---|
| Satin Nickel Finish | Black Finish | | Large Flex Relief [2] | QGP Series | Insert Contacts |
| | Silver [1] | Gold [1] | | | |
| A3M | A3MB | A3MBAU | A3ML | QGP323 | 3 |
| A3MS [3] | — | — | — | — | 3 |
| A4M | A4MB | A4MBAU | A4ML | — | 4 |
| A5M | A5MB | A5MBAU | ◊A5ML | — | 5 |
| A6M | — | A6MBAU | — | — | 6 |
| A7M | — | A7MBAU | — | — | 7 |

All above part numbers have black flex relief installed. Contact Switchcraft for color flex relief.

◊ Available on special order only; contact Switchcraft for price and delivery.

DIMENSIONS ARE FOR REFERENCE ONLY Inch (mm)


® Registered trademark of Switchcraft, Inc.
Note: Contact your Switchcraft Representative for price and delivery

* Please visit the product pages on our website for the most up-to-date product information

# Q-G® CONNECTORS (continued)

## Q-G® COLOR FLEX RELIEFS

Rainbow color cable strain relief bushings can be specified to match or complement equipment decors or code individual or grouped connections for quick recognition. On special order, tan, pink and dark blue are available. Bushings accommodate cables from .21" to .30" diameter. Prepackaged, 25 per bag.

| Part Numbers 3 Pins/Contacts | | Flex Relief Color | Flex Relief Only |
|---|---|---|---|
| Female | Male | | |
| A3F | A3M | Black | SR00 |
| ◊A3F01 | ◊A3M01 | Brown | SR01 |
| ◊A3F02 | ◊A3M02 | Red | SR02 |
| ◊A3F03 | ◊A3M03 | Orange | SR03 |
| ◊A3F04 | ◊A3M04 | Yellow | SR04 |
| ◊A3F05 | ◊A3M05 | Green | SR05 |
| ◊A3F06 | ◊A3M06 | Blue | SR06 |
| ◊A3F07 | ◊A3M07 | Violet | SR07 |
| ◊A3F08 | ◊A3M08 | Gray | SR08 |
| ◊A3F09 | ◊A3M09 | White | SR09 |

◊ Special order only; contact Switchcraft for price and delivery.

## Q-G® FLEX RELIEF

Flex relief bushing with small opening accommodates cables from .105" (2.7 mm) to .205" (5.2 mm). Standard size bushing accepts cables from .210" (5.3 mm) to .300" (7.6 mm) outside diameter. Bushing with large opening accommodates cables from .300" (7.6 mm) to .328" (8.3 mm). Larger cables are often needed for multiple-conductor instrumentation. Code letter "L" in last or second to last digit in part number indicates plug with large bushing. Code letter "S" in last or second to last digit in part number indicates plug with smaller bushing.

**Small Cables**
.105 (2.7) to .205 (5.2)

**Standard Cables**
.210 (5.3) to .300 (7.6)

**Large Cables**
.300 (7.6) to .328 (8.3)

**SWITCHCRAFT PART NUMBER ◊K255**
Package of 100 cable clamp screws.

◊ Special order only; contact Switchcraft for price and delivery.

DIMENSIONS ARE FOR REFERENCE ONLY Inch (mm)

* Please visit the product pages on our website for the most up-to-date product information

# AAA CONNECTORS

## AAA SERIES Q-G® TWIST CONNECTOR

Switchcraft introduces the AAA Series or Q-G® Twist XLR connectors. The Q-G® Twist Series is available in male or female cord plug, 3 through 7 pins or contacts. The unique features are the easy twist on combination handle/strain relief, and the reduced number of parts to assemble. With the insert built into the front shell, and the strain relief preloaded into the handle, the end user has only two parts to assemble – slide the handle onto the cable, solder the terminations, and twist on the handle. As the handle is tightened, the strain relief tightens around the outer jacket of the cable. A ramp on the strain relief keeps it from rotating around the cable jacket and twisting the cable. The strain relief was designed to accommodate the most popular cable sizes. A rugged die-cast metal handle insures optimum protection, and increases signal shielding. Popular options include black and gold finishes, as well as a lower cost plastic handle version.

## FEATURES AND BENEFITS

- Only two pieces to assemble
- Easy twist on handle reduces assembly time
- Rugged die-cast metal handle
- Accepts cable OD's (.100" – .285")
- Black finish available
- Gold-plated pins/contacts available
- Lower cost plastic handle version available

## APPLICATIONS

- Audio
- Medical
- Instrumentation
- Process Controls

## SPECIFICATIONS

### ELECTRICAL

**Contact Resistance:** 50 milliohm maximum, per pole.
**Current Rating @ 125VAC:**
3 pole – 15A
4 pole –10A
5 & 6 pole – 7.5A
7 pole – 5A
**Insulation Resistance:** 1,000 MΩ, minimum.
**Dielectric Withstanding Voltage:** 1,000 V (rms)
**Capacitance:** ≤3 pF between pins and ≤6 pF between pins and shell, maximum

### MECHANICAL

**Insertion/Withdrawal Forces:** 10 lbs. maximum, 8 lbs. nominal / 7 lbs. maximum, 5 pounds nominal.
**Wire Size:**
**3 Contact**
#12 wire gauge solid #14 wire gauge stranded
**4 Contact**
#14 wire gauge solid #16 wire gauge stranded
**5 & 6 Contact**
#16 wire gauge solid #18 wire gauge stranded
**7 Contact**
#18 wire gauge solid #20 wire gauge stranded

### MATERIAL

**Shell:** Die-Cast zinc with nickel finish or black chrome.
**Handle:** Die cast with nickel finish or black chrome. Also black thermoplastic handle available.
**O Ring:** TPR (Thermoplastic rubber).
**Insert Insulation:** Molded thermoplastic.
**Socket Contacts:** Silver plated copper alloy tarnish resistant; bifurcated on 3 and 4 contact types. Gold is available.
**Pin Contacts:** Silver plated copper alloy. Resists tarnishing, and provides excellent electrical conductivity. Gold is available.
**Latch lock:** High strength die cast zinc.
**Strain Relief:** TPR
**Flex Relief:** TPR (Thermoplastic rubber)

### CONNECTOR PART NUMBER SCHEME

| Series | Pins/Contacts | Gender | Handle Material | Housing Finish | Terminal Finish | Z |
|---|---|---|---|---|---|---|
| AAA | 3-7 pins | F: Female | P: Plastic | B: Black | AU: Gold | New Strain Relief |
| | 3-7 pins | M: Male | Blank: Metal | Blank: Nickel | Blank: Silver | |

DIMENSIONS ARE FOR REFERENCE ONLY Inch (mm)


® Registered trademark of Switchcraft, Inc.
Note: Contact your Switchcraft Representative for price and delivery

* Please visit the product pages on our website for the most up-to-date product information

## AAA CONNECTORS (continued)

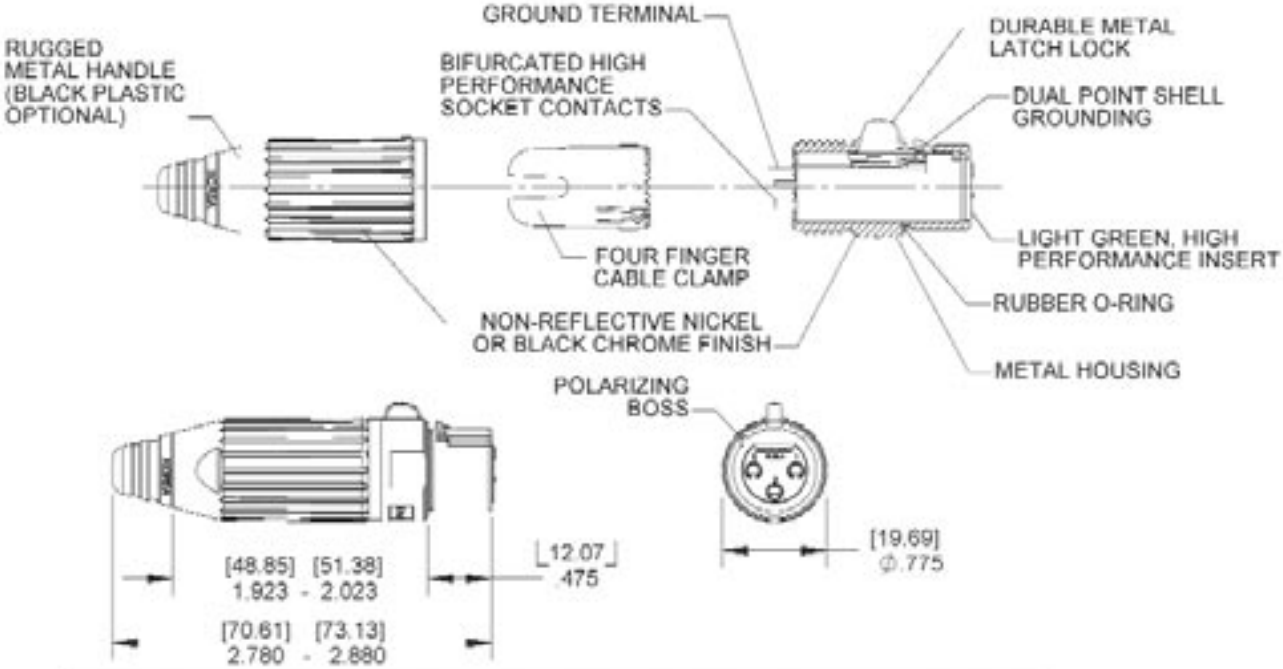

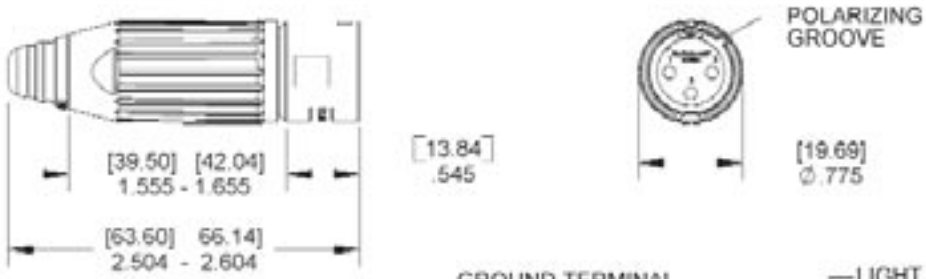


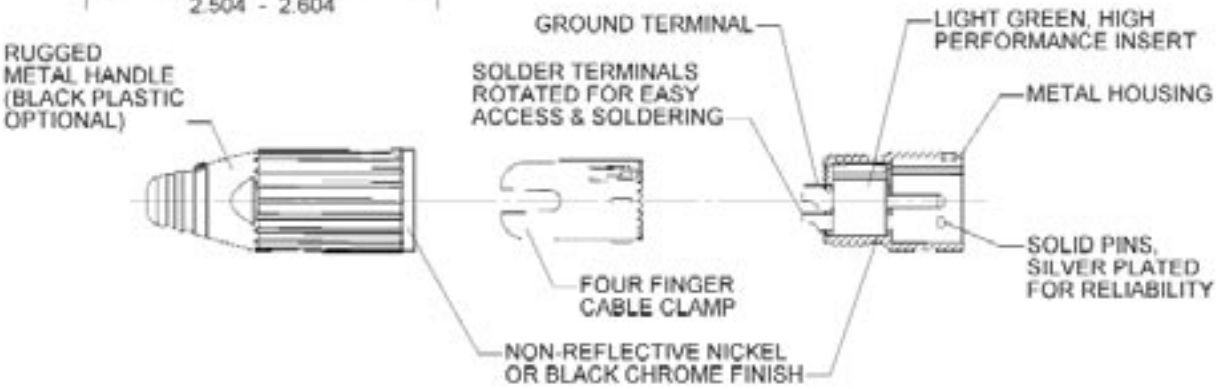


DIMENSIONS ARE FOR REFERENCE ONLY Inch (mm)

* Please visit the product pages on our website for the most up-to-date product information

## Q-G® CONNECTORS (continued)

### R(*)FZ CORD PLUG

Right angle, female cord mount plug, latching. New style incorporates an insert that can rotate every 45° for added flexibility in tight applications. Also utilizes the new strain relief system with twist-on handle.

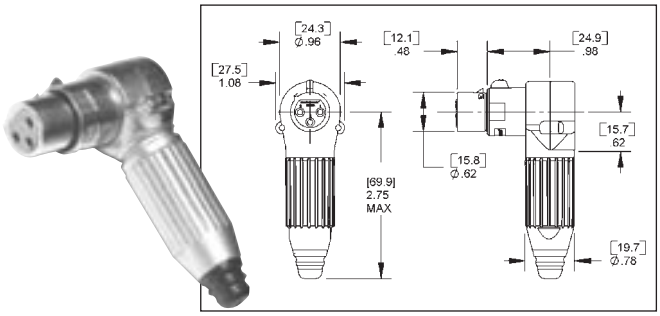


| Part Number | Insert Contacts |
|---|---|
| R3FZ | 3 |
| R4FZ | 4 |
| R5FZ | 5 |
| R6FZ | 6 |
| R7FZ | 7 |

Accepts cable O.D.'s .100"–.285"
For black finish, add "B" suffix.
For black/gold finish, add "BAU" suffix.

### R(*)MZ CORD PLUG

Right angle, male cord mount plug, latching. New style incorporates an insert that can be rotated every 45° for added flexibility in tight applications. Also utilizes the new strain relief system with twist-on handle.

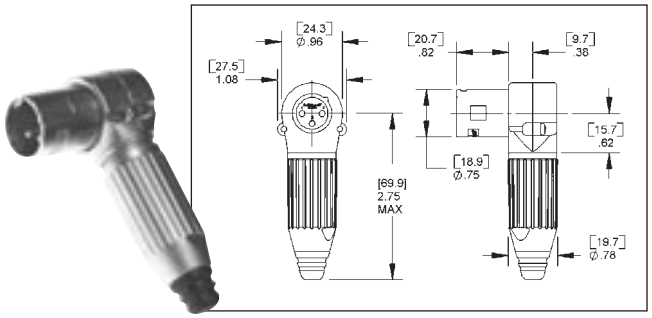


| Part Number | Insert Pins |
|---|---|
| R3MZ | 3 |
| R4MZ | 4 |
| R5MZ | 5 |
| R6MZ | 6 |
| R7MZ | 7 |

Accepts cable O.D.'s .100"–.285"
For black finish, add "B" suffix.
For black/gold finish, add "BAU" suffix.

### P(*)F MICROPHONE PLUG

Female microphone plug for gooseneck mount. Fits standard gooseneck with external 5/8-27 thread. Microphone plugs directly into connector. (Gooseneck not supplied.)

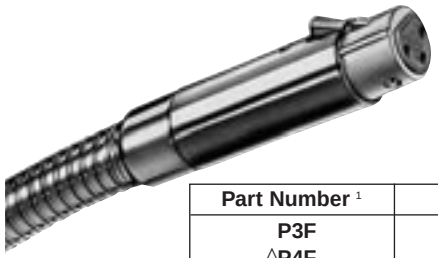

| Part Number [1] | Insert Contacts |
|---|---|
| P3F | 3 |
| ◊P4F | 4 |
| ◊P5F | 5 |

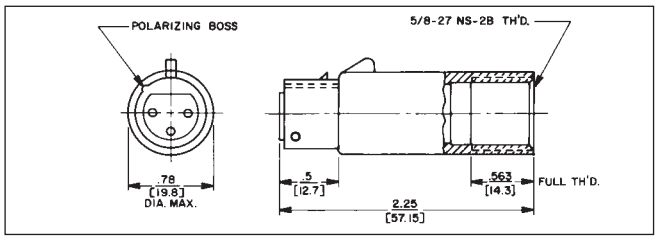


1. Satin Nickel Finish. (standard)
2. Large flex relief accepts cable from .25" to .328" diameter. (optional)
3. Gold-plated contacts. (optional)

◊ Available on special order only; contact Switchcraft for price and delivery.

### P(*)M GOOSENECK PLUG

Male plug for gooseneck mount. Fits standard gooseneck with internal 5/8-27 thread. Use on gooseneck with microphone plug on opposite end. Plugs directly into female receptacle. (Gooseneck not supplied.)

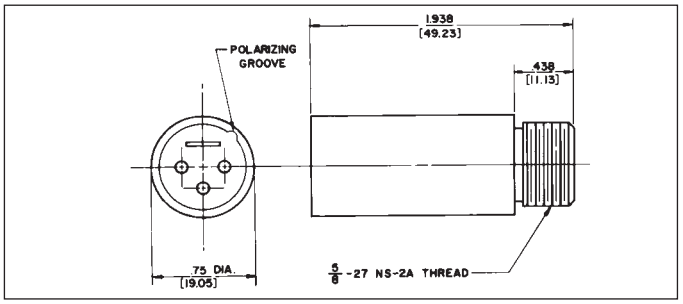


| Part Number [1] | Insert Pins |
|---|---|
| P3M | 3 |
| ◊P4M | 4 |
| ◊P5M | 5 |

DIMENSIONS ARE FOR REFERENCE ONLY Inch (mm)


® Registered trademark of Switchcraft, Inc.
Note: Contact your Switchcraft Representative for price and delivery

* Please visit the product pages on our website for the most up-to-date product information

# Q-G® CORD PLUG CONNECTORS AND RECEPTACLES

## T(*)F AND T(*)FM CORD PLUG WITH ON-OFF SWITCH

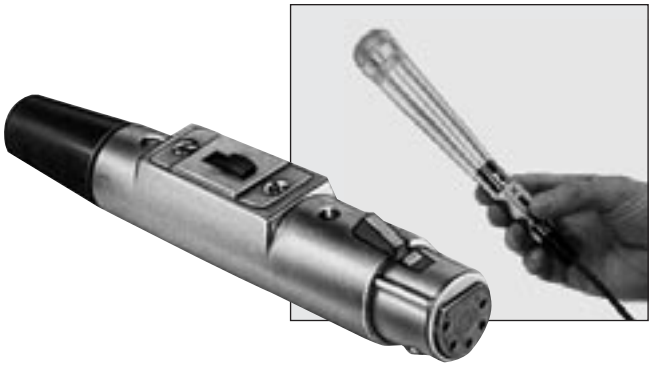

| Part Number | Part Number | Insert Contacts |
|---|---|---|
| T3F | ◊T3FL | 3 |
| ◊T3FM | ◊T3FLM | 3 |
| ◊T4F | ◊T4FL | 4 |
| ◊T4FM | ◊T4FLM | 4 |

**T(*)F** Straight female cord plug with DPDT (2-C) locking on-off switch; standard latchlock.
**T(*)FM** Straight female cord plug with SPDT (1-C) momentary on-off switch; standard latchlock.
Slide switches rated 500 mA, 125V (AC or DC). Mounting screws are supplied.

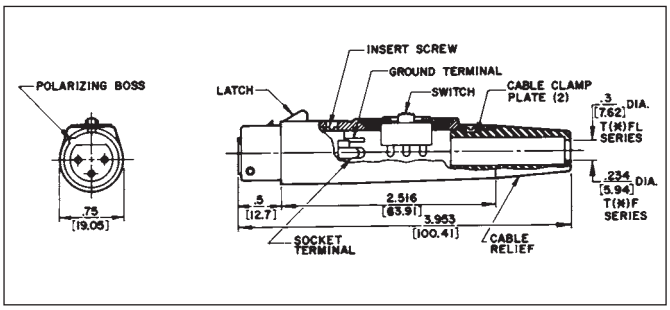


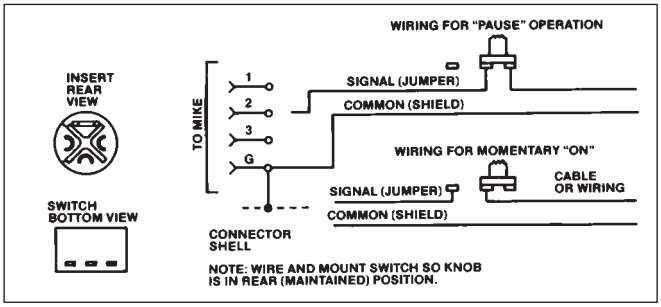


## D(*)M, D(*)F AND D(*)FD RECEPTACLES

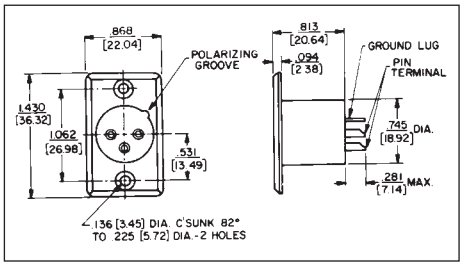

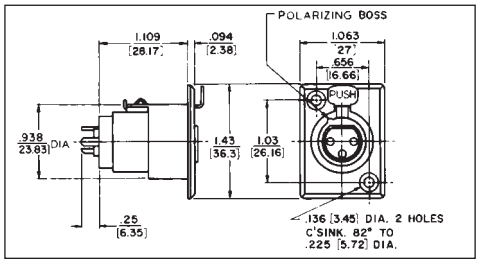


Studio quality black and gold Q-G® receptacle with black housing and gold contacts is designed for low/stable contact resistance and withstands corrosion where highest quality is required for recording and broadcast studio equipment, consoles, and other applications.

**D(*)M SERIES –** Male receptacle for panel or chassis mounting. Special rectangular flange permits close spacing on crowded panels, has two .136" (3.45mm) diameter countersunk holes for #5-40 flat head mounting screws (not supplied). Mounts from front of panel or chassis in .766" (19.45) diameter hole. Satin nickel finish (Series D*M) or black finish (Series D*MB, or D*MBAU).

**D(*)F SERIES –** Female receptacle for panel or chassis mounting. Flange has two .136" (3.45 mm) diameter countersunk holes for #5-40 flat head mounting screws (not supplied). Mounts from front of panel or chassis in .953" (24.21 mm) diameter hole. Series D(*)F has standard latchlock; Series D(*)FD has FAS-DISCONNECT detent. Satin nickel finish (Series D*F and D*FD) and "Black-Velvet" finish (Series D*FBAU).

| Nickel Finish | Black Finish | | Detent | QGP Series[1] | Pins |
|---|---|---|---|---|---|
| | Silver | Gold | | | |
| D3M | D3MB | D3MBAU | — | QGP363 | 3 |
| D4M | D4MB | D4MBAU | — | — | 4 |
| D5M | D5MB | D5MBAU | — | — | 5 |
| D6M | D6MB | D6MBAU | — | — | 6 |
| D7M | D7MB | D7MBAU | — | — | 7 |
| D3F | D3FB | D3FBAU | D3FD | QGP362 | 3 |
| D4F | D4FB | D4FBAU | ◊D3FDB | — | 4 |
| D5F | D5FB | D5FBAU | — | — | 5 |
| D6F | D6FB | D6FBAU | ◊D6FDB | — | 6 |
| D7F | D7FB | D7FBAU | — | — | 7 |

* Number of insert contact or pins must be specified to complete part number.
◊ Available on special order only; contact Switchcraft for price and delivery.
1 Non-reflective gray finish, gold-plated pins.

DIMENSIONS ARE FOR REFERENCE ONLY Inch (mm)

* Please visit the product pages on our website for the most up-to-date product information

# Q-G® RECEPTACLES (continued)

## B(*)F RECEPTACLE

Panel-mount female receptacle. Mounts with spanner nut from front of panels up to .4375" (11.11 mm) thick. Slot in threaded part of housing permits non-turn mounting. Requires 1.25" (31.75 mm) diameter minimum mounting hole. Spanner nut is die-cast zinc with satin nickel finish (Series B*F) or black finish (Series B*FB).

| Part No.[1] | Part No. [2] | Insert Contacts |
|---|---|---|
| B3F | B3FB | 3 |
| B4F | — | 4 |
| B5F | — | 5 |
| B6F | — | 6 |
| B7F | — | 7 |

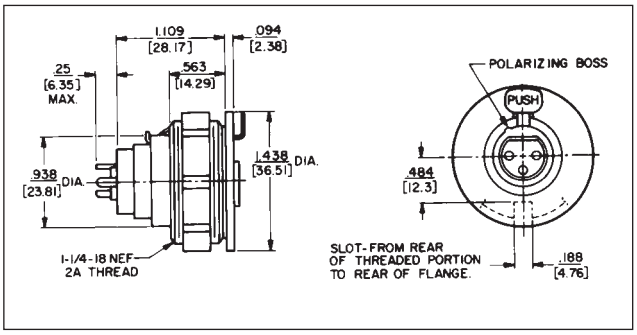


## B(*)M RECEPTACLE

Panel-mount male receptacle. Mounts with locknut from front of panels up to .250" (6.35 mm) thick. Requires .812" (20.64 mm) diameter mounting hole. For non-turning mounting, can be keyed to "D" shaped panel hole, or S3519 mounting adapter can be used. Satin nickel finish (Series B*M) or black finish (Series B*MB).

| Part No.[1] | Part No.[2] | Insert Pins |
|---|---|---|
| B3M | B3MB | 3 |
| B4M | — | 4 |
| B5M | — | 5 |
| B6M | — | 6 |
| B7M | — | 7 |

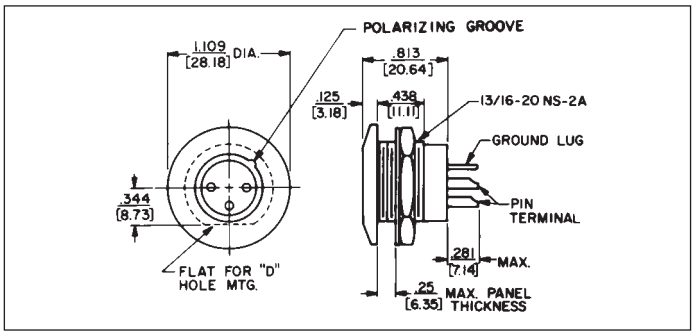


## C(*)F RECEPTACLE

Female receptacle for panel or chassis mounting. Flange has three .140" (3.57 mm) diameter holes for #5-40 mounting screws (not supplied). Mounts from front of panel or chassis in 0.953" (24.21 mm) diameter hole.

| Part No.[1] | Part No. [5] | Insert Contacts |
|---|---|---|
| C3F | ◊QGP326 | 3 |
| C4F | — | 4 |
| C5F | — | 5 |
| C6F | — | 6 |
| C7F | — | 7 |

◊ Special order only. Contact Switchcraft.

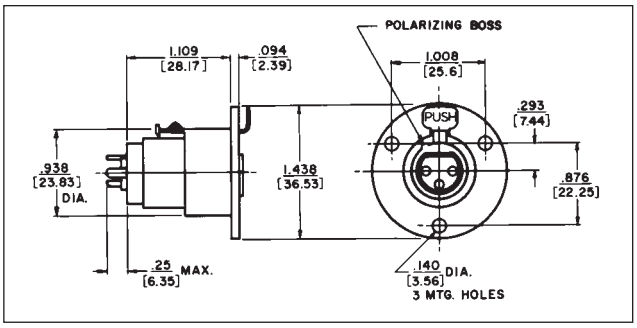


## C(*)M RECEPTACLE

Male receptacle for panel or chassis mounting. Flange has three .140" (3.57 mm) diameter holes for #5-40 mounting screws (not supplied). Mounts from front of panel or chassis in .766" (19.45 mm) diameter hole.

| Part No. [1] | Part No.[5] | Insert Pins |
|---|---|---|
| C3M | ◊QGP327 | 3 |
| C4M | — | 4 |
| C5M | — | 5 |
| C6M | — | 6 |
| C7M | — | 7 |

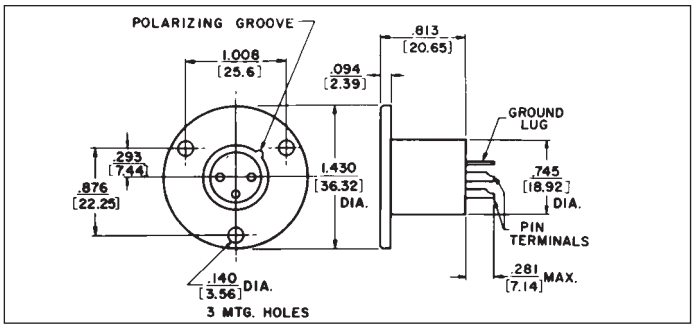


1. Satin nickel finish. (standard) 2. "Black-Velvet" finish. (optional) 3. Gold-plated contacts. (optional) 4. Fas-disconnect detent. (optional)
5. Non-reflective gray finish, gold-plated pins. (standard)

DIMENSIONS ARE FOR REFERENCE ONLY Inch (mm)


® Registered trademark of Switchcraft, Inc.
Note: Contact your Switchcraft Representative for price and delivery

* Please visit the product pages on our website for the most up-to-date product information

# E SERIES RECEPTACLES

E Series Receptacles

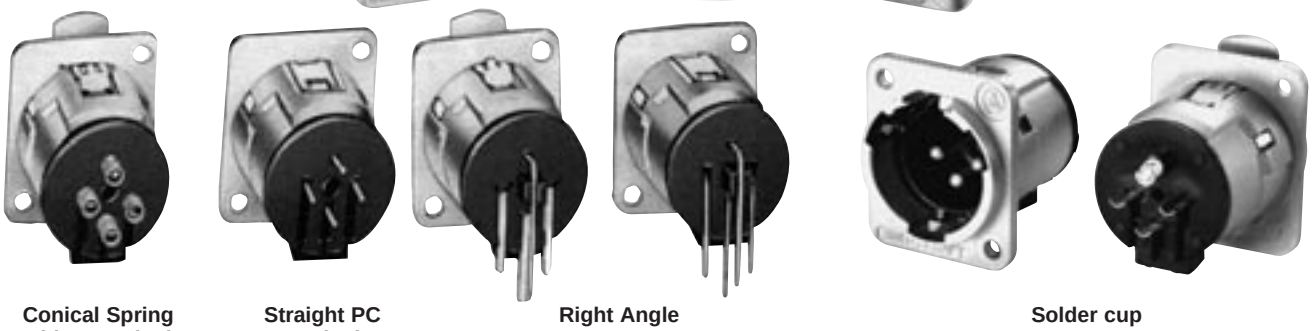

Conical Spring Solder Terminals | Straight PC Terminals | Right Angle PC Terminals | Solder cup

E Series Q-G® Receptacles are available with quick release inserts. Quick insert release is accomplished by turning screw lock from front of insert. Insert can then be removed from the rear. For PC board applications, insert can be removed/assembled to the housing while soldered to the PC board.

E Series receptacles can be specified as complete assemblies, or as separate inserts and housings. Stocking separate inserts and housings offer considerable cost and time savings by minimizing inventory and maximizing configuration possibilities.

## FEATURES

- Replaces Neutrik D Series
- 3-pin contact; male and female types
- Both male and female fit in same panel cutout
- Choice of 4 terminations; solder cups, conical springs, straight or right angle PC terminals.
- Inserts and housings can be specified separately
- Quick release inserts for ease of removal
- Locking receptacles
- Protected ground clip minimizes scooping damage
- Insert lock detent resists disassembly from shock or vibration during normal handling and transportation
- Silver and gold-plated contacts available
- Rugged metal shells; black or satin nickel finishes
- Through-the-shell ground connection and all-metal shells for greater shielding effectiveness
- Compatible with Switchcraft Q-G ®, QGP and other connectors with similar configurations

## QUICK RELEASE INSERT

In two simple steps, inserts can be released while housing stays fastened to the panel.

1. With a small screwdriver, twist insert locking screw from front of insert.
2. Remove insert from the rear of the housing.

## TERMINALS

Four terminations are available on E Series receptacles:

1. **Conical Spring Solder terminals** – conical spring on each pin holds wire in place providing constant pressure during soldering process. This effectively acts as a third hand, assuring a high quality solder termination. Housing mounts to panel.
2. **Straight PC terminals** – direct termination to PC board. Housing mounts to panel.
3. **Right-angle PC terminals** - direct termination to PC board at a right-angle. Housing mounts to panel.
4. **SC** - Solder cup

## SPECIFICATIONS

### ELECTRICAL

**Contact Resistance:** 50 milliohms maximum, per pole.
**Current Rating:** 15A
**Insulation Resistance:** 2 X $10^6$ MΩ
**Dielectric Resistance:** 1,000 V rms
**Capacitance:** 10 pF

### MECHANICAL

**Insertion/Withdrawal Forces:** 7 pounds maximum/ 5 pounds nominal insertion; 7 pounds maximum/ 5 pounds nominal withdrawal.
**Life:** 10,000 operations (minimum).

### ENVIRONMENTAL

**Thermal Range:** -55° C to +85° C
**Humidity:** Meets MIL-STD-202F, method 106E.
**Thermal Shock:** Meets MIL-STD-202F, method 107D.
**Salt Spray:** Meets MIL-STD-202F, method 101D.

### MATERIAL

**Shells:** Die-cast; satin-nickel or Black Velvet.
**Inserts:** Glass-filled thermoplastic.
**Socket Contacts:** Copper alloy, silver- or gold-plated.
**Pin Contacts:** Copper alloy, silver- or gold-plated.
**Latch Release:** Steel, nickel-plated.
**Insert Locking Cam:** Die-cast zinc.

DIMENSIONS ARE FOR REFERENCE ONLY Inch (mm)

* Please visit the product pages on our website for the most up-to-date product information

# E SERIES PART NUMBERING SYSTEM



### CONNECTOR PART NUMBER SCHEME

| Series | Pins/ Contacts | Gender | Fas-disconnect Option | Termination Style | Housing Finish | Terminal Finish | Mounting Hole Options |
|---|---|---|---|---|---|---|---|
| **E** | 3-5 pins | F: Female<br>M: Male | D: Fas-disconnect<br>Blank: Standard locking | ST: Straight PC terminals<br>RA: Right angle PC terminals<br>SC: Solder cups<br>Blank: Conical springs* | B: Black<br>Blank: Nickel | AU: Gold<br>Blank: Silver | M3: M3 x 0.5 thread<br>440: #4-40 thread<br>Blank: Counter-sunk hole |

### HOUSING ONLY PART NUMBER SCHEME

| Series | Pins/ Contacts | Housing Finish | Mounting Hole Options |
|---|---|---|---|
| **E** | F: Female<br>M: Male | B: Black<br>Blank: Nickel | M3: M3 x 0.5 thread<br>440: #4-40 thread<br>Blank: Counter-sunk hole |

### INSERT ONLY PART NUMBER SCHEME

| Series | Pins/ Contacts | Gender | Fas-disconnect Option | Termination Style | Housing Finish | Terminal Finish |
|---|---|---|---|---|---|---|
| **E** | 3-5 pins | F: Female<br>M: Male | D: Fas-disconnect<br>Blank: Standard locking | ST: Straight PC terminals<br>RA: Right angle PC terminals<br>SC: Solder cups<br>Blank: Conical springs* | | AU: Gold<br>Blank: Silver |

*3-pin only

DIMENSIONS ARE FOR REFERENCE ONLY Inch (mm)



® Registered trademark of Switchcraft, Inc.
Note: Contact your Switchcraft Representative for price and delivery

* Please visit the product pages on our website for the most up-to-date product information

## E SERIES

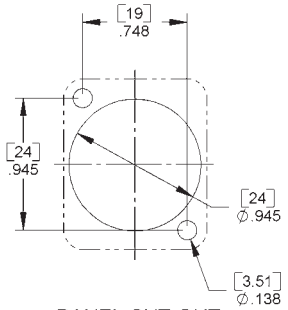


PANEL CUT-OUT
FRONT OR REAR MOUNT

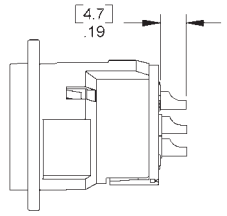


MALE SOLDER CUP
OPTION "SC"

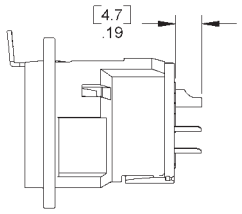


FEMALE SOLDER CUP
OPTION "SC"

REAR MOUNT OPTIONS

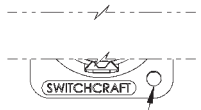


MOUNTING
HOLE TYP (2)

OPTION "M3"
M3 x 0.5 THREADED HOLES

OPTION "440"
#4-40 THREADED HOLES

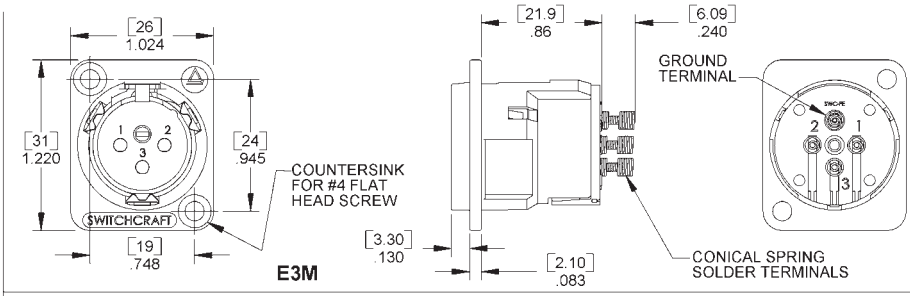


E3M

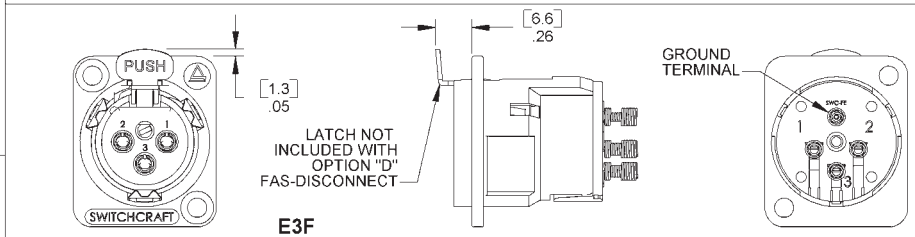


E3F

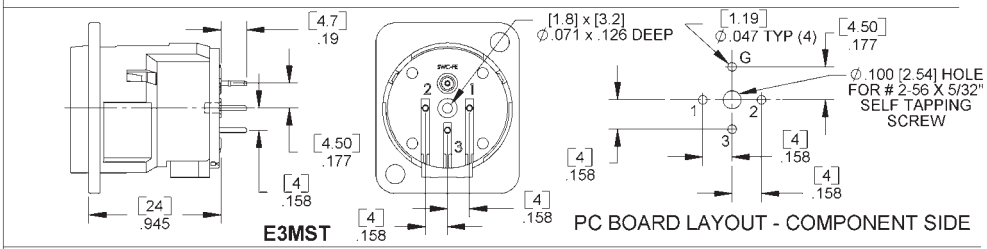


E3MST

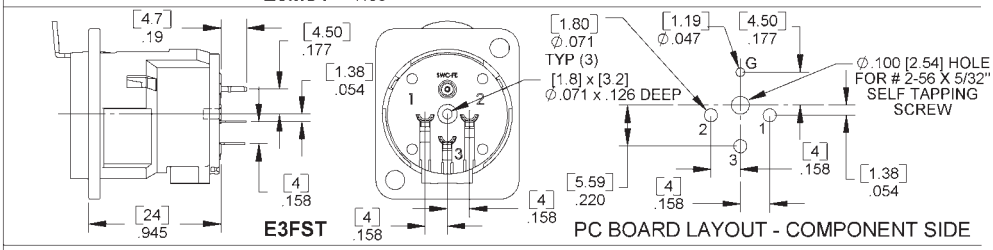


E3FST

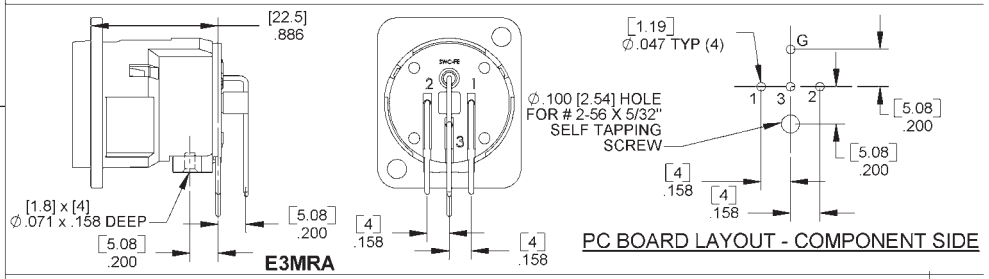


E3MRA

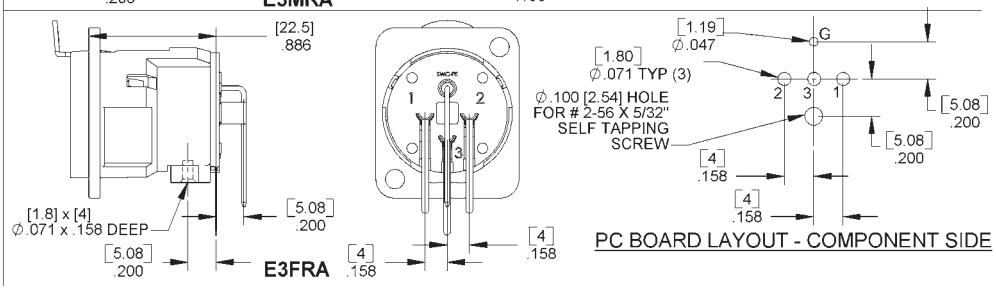


E3FRA

DIMENSIONS ARE FOR REFERENCE ONLY Inch (mm)

* Please visit the product pages on our website for the most up-to-date product information

## E SERIES (continued)

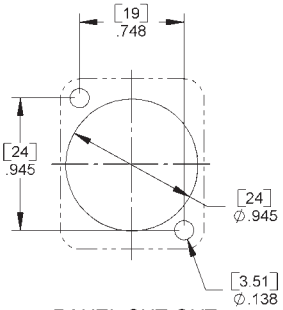


PANEL CUT-OUT
FRONT OR REAR MOUNT

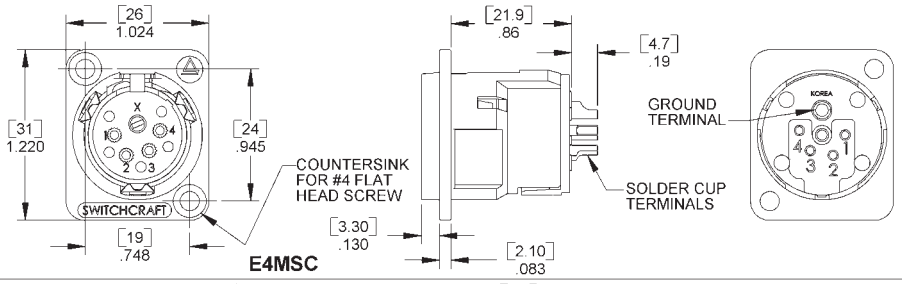


E4MSC

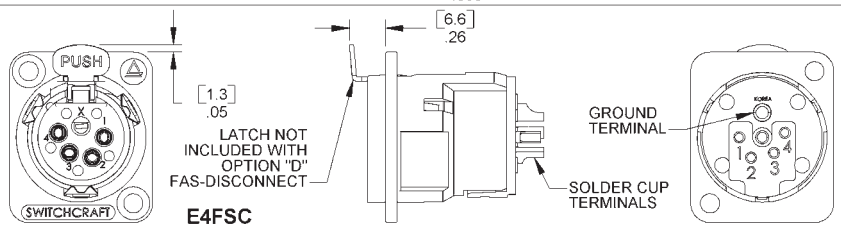


E4FSC

MALE CONNECTOR
GROUND TO PIN #1
OPTION "G1"

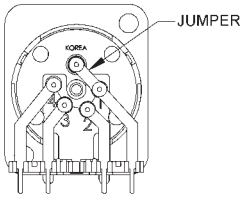


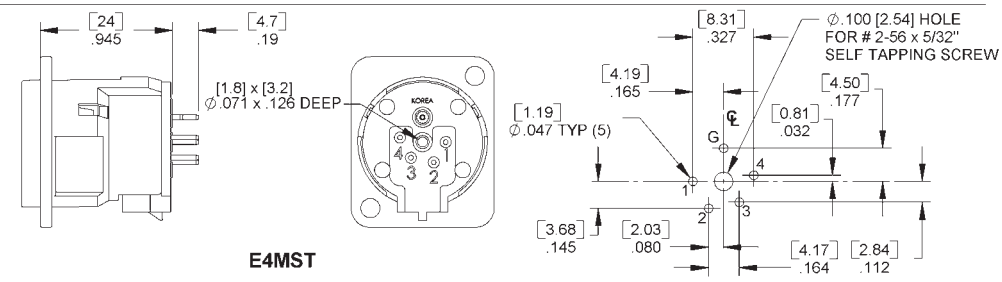


E4MST

FEMALE CONNECTOR
GROUND TO PIN #1
OPTION "G1"

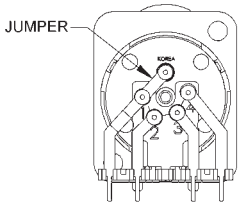


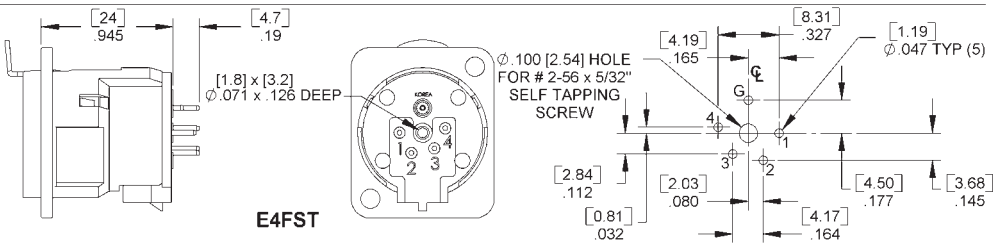


E4FST

REAR MOUNT OPTIONS

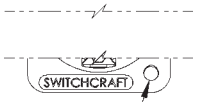


MOUNTING
HOLE TYP (2)

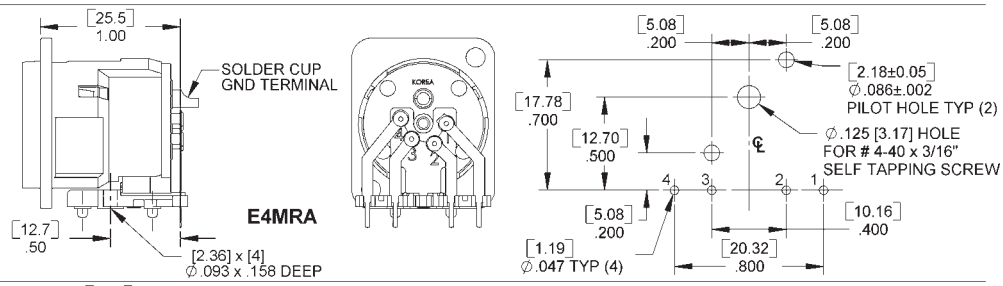


E4MRA

OPTION "M3"
M3 x 0.5 THREADED HOLES

OPTION "440"
#4-40 THREADED HOLES

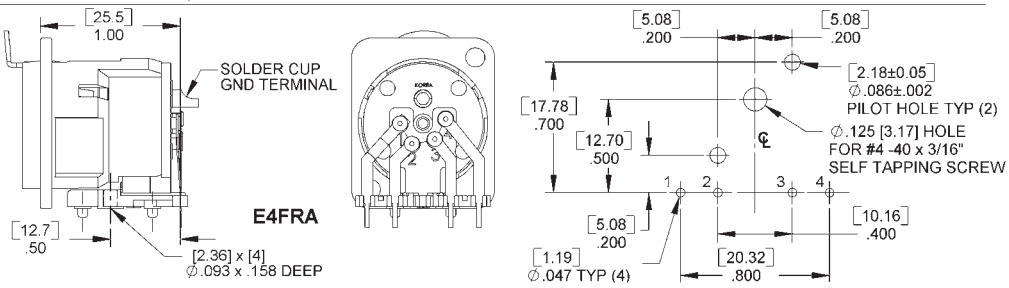


E4FRA

DIMENSIONS ARE FOR REFERENCE ONLY Inch (mm)


® Registered trademark of Switchcraft, Inc.
Note: Contact your Switchcraft Representative for price and delivery

* Please visit the product pages on our website for the most up-to-date product information

## E SERIES (continued)

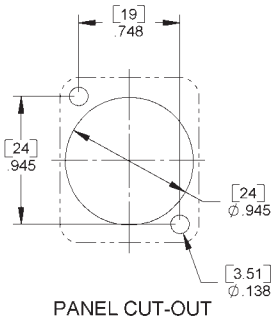


PANEL CUT-OUT
FRONT OR REAR MOUNT

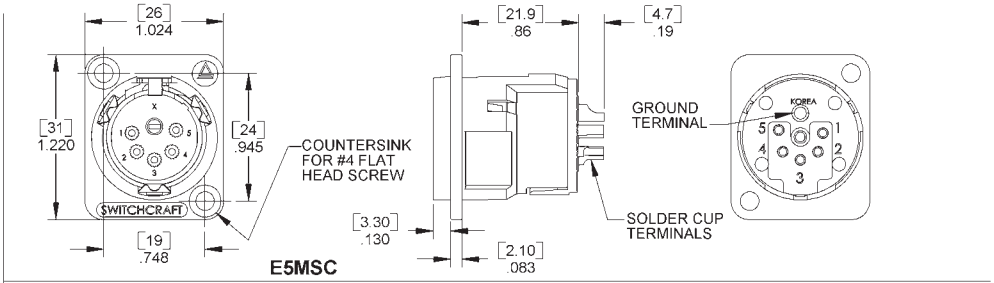


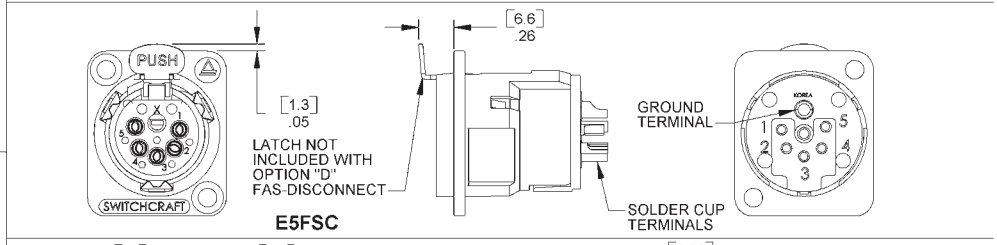


MALE CONNECTOR
GROUND TO PIN # 1
OPTION "G1"

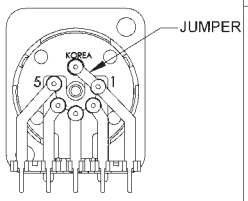


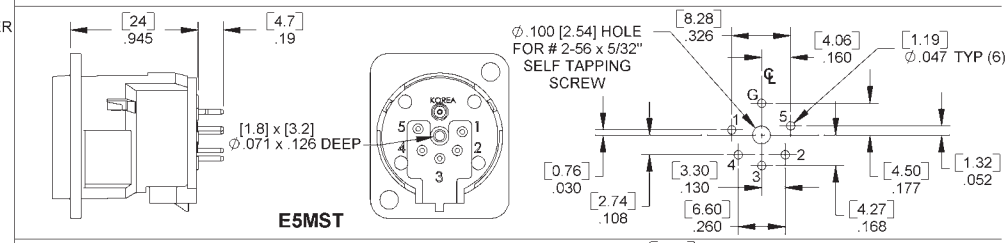


FEMALE CONNECTOR
GROUND TO PIN #1
OPTION "G1"

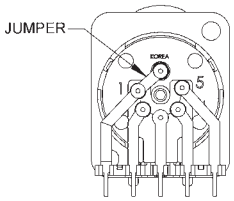


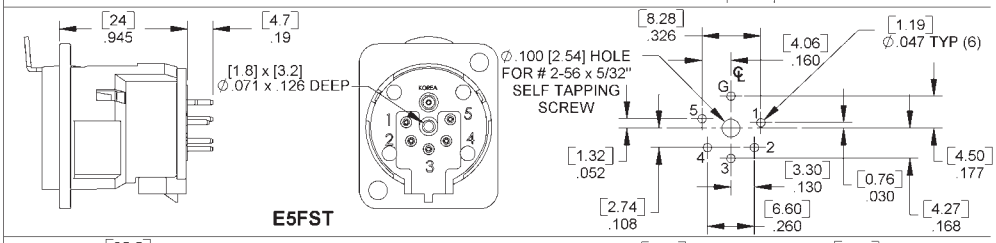


REAR MOUNT OPTIONS

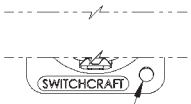


MOUNTING
HOLE TYP (2)

OPTION "M3"
M3 x 0.5 THREADED HOLES

OPTION "440"
#4-40 THREADED HOLES

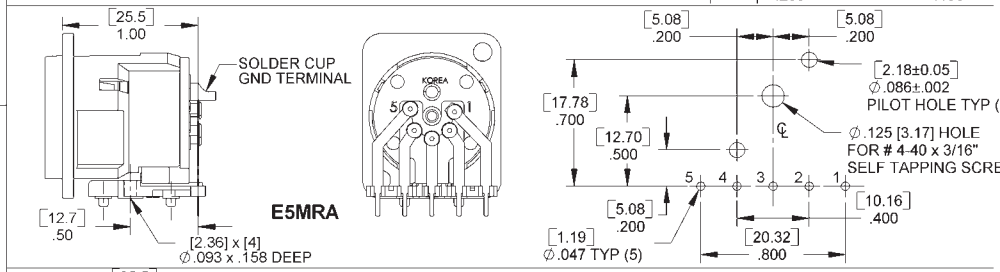


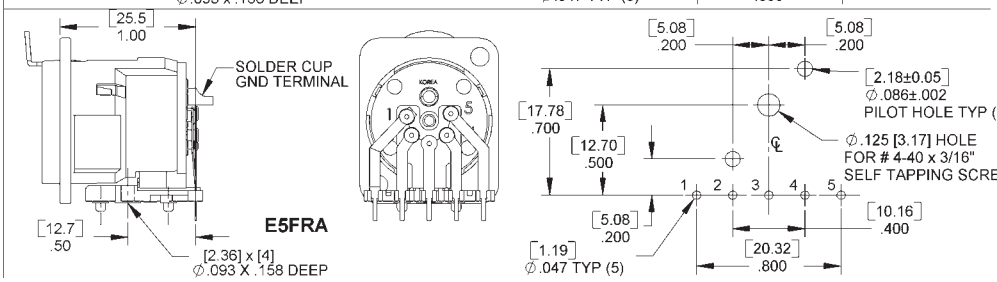


DIMENSIONS ARE FOR REFERENCE ONLY Inch (mm)

* Please visit the product pages on our website for the most up-to-date product information

# EH SERIES RECEPTACLES

The EH Series consist of different styles of popular connectors in our E Series housing. This allows the end user to punch one single hole size and populate wall plates, gang assemblies with different types of connectors. Connector styles include BNC feed-throughs, RCA feed-throughs, USB feed-throughs, IEEE 1394 Firewire feed-throughs, BNC to solder cup, and RCA to BNC.

EHBNC2

EHRCA2

## FEATURES

- Utilizes same panel cut-out as E Series QG connectors
- Rugged metal shells
- Available with a wide variety of popular feed-through connectors

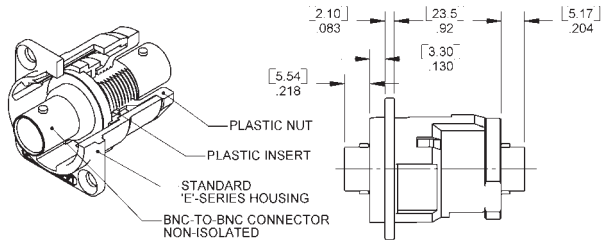


EHBNC2

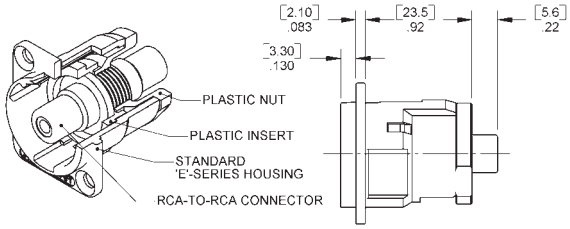


EHRCA2

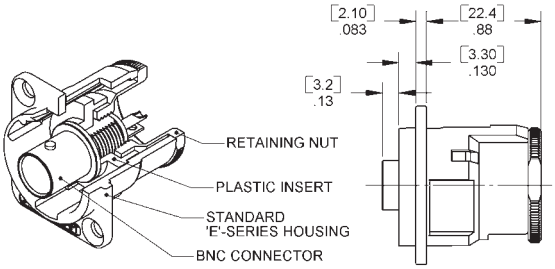


EHBNCSC

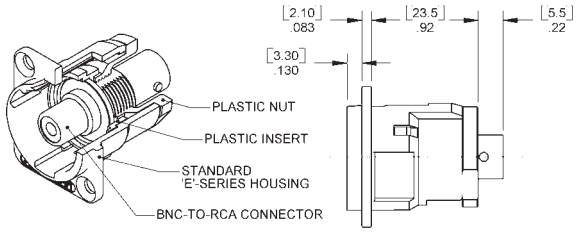


EHRCABNC

| Part Number | Description |
|---|---|
| EHBNC2 | BNC to BNC |
| EHBNCSC | BNC to solder cup |
| EHRCA2 | RCA to RCA |
| EHRCABNC | RCA to BNC |
| EHUSB2 | USB to USB |
| EH13942 | IEEE1394 to IEEE1394 |
| EHCAT62 | Cat6 to Cat6 |

DIMENSIONS ARE FOR REFERENCE ONLY Inch (mm)



® Registered trademark of Switchcraft, Inc.
Note: Contact your Switchcraft Representative for price and delivery

* Please visit the product pages on our website for the most up-to-date product information

# PQG® RECEPTACLES

PQG3FRA112

PQG3MRA112

PQG3FST112

PQG3MST112

Q-G® 3 pin/contact PC receptacles offer economy, reliability and performance in amplifiers, audio mixing boards, and other outboard gear. Choose receptacles with just the right combination of standard and optional bonus features to tailor the PQG series to your exact needs.

## STANDARD FEATURES

- UL 94V-0 plastic materials.
- Circuit #1 “makes” first and “breaks” last during connect/disconnect.
- Positive mechanical polarization.
- Minimum PC board space required.
- Integral PC board locating posts.
- Mating/unmating cycles in excess of 10,000.
- Mates with Switchcraft Q-G and other compatible connectors.

## OPTIONAL FEATURES

- Positive latch lock or FasDisconnect (female only).
- Shell-to-ground terminal.
- Mounting Plates:
  - **A. Backup Mounting Plate** with two, M3 x 0.5 threaded holes for faster, more rugged mounting to equipment panel/chassis.
  - **B. “Tri-Mounting” Plate**...plus two bifurcated pcb retainers with snap-in terminals which perform three valuable functions:
    1. Provide ground connection from panel to PCB.
    2. Hold connector securely to PCB during wave-soldering.
    3. Add strength between panel/chassis and PCB during soldering by “wicking” solder through the PCB and up sides of retainers to assure continuity.
  - **C.** Two panel grounds are integral with mounting plate.

## SPECIFICATIONS

**Housing:** Black, glass-filled thermoplastic, UL 94V-0. Flange mounting holes are .128 inch diameter
**Socket Contacts:** Copper alloy, electrotinned.
**Pin Contacts:** Copper alloy, electrotinned.
**Latch Release:** Steel, nickel-plated.
**Mounting Plate:** Copper alloy.
**Shell-to-Ground Terminals:** Copper alloy, electrotinned.
**Latches:** Copper alloy, nickel-plated.
**Insertion/Withdrawal Forces:** 2 pound (nominal).
**Contact Resistance:** .05 ohms per pole (maximum).
**Dielectric Withstanding Voltage:** 1,000 V rms for 1 minute.
**Insulation Resistance:** $10^4$ MΩ @ 500 V DC.
**Current Capacity:** 10A maximum (carry only).
**Operating Temperature:** -30°F to 185°F (-34°C to 85°C).
**Mechanical Life:** 10,000 cycles @ 10 cpm.

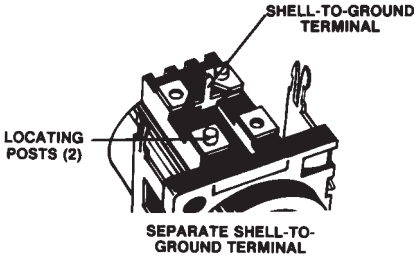


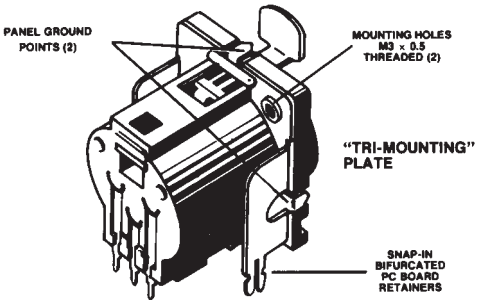

DIMENSIONS ARE FOR REFERENCE ONLY Inch (mm)

* Please visit the product pages on our website for the most up-to-date product information

# PQG® SERIES PART NUMBERING SYSTEM

| P Q G | 3 | | | | | |
|---|---|---|---|---|---|---|
| **SERIES PQG-** | **PINS/ CONTACTS** | **GENDER** | **PC TERMINALS** | **LATCHING** | **GROUND TERMINAL** | **MOUNTING PLATE** |
| Composite QG | 3 | **F -** Female<br>**M -** Male | **RA** - Right Angle, Bottom Exit<br>**ST** - Straight Rear Exit | **0** - None<br>**1** - Latch Lock<br>**2** - Fas-Disconnect (female only) | **0** - None<br>**1** - Installed | **0** - None<br>**1** - Plate with two, M3 x 0.5 threaded holes<br>**2** - Plate with two, M3 x 0.5 threaded holes, panel grounds and PCB retainers |

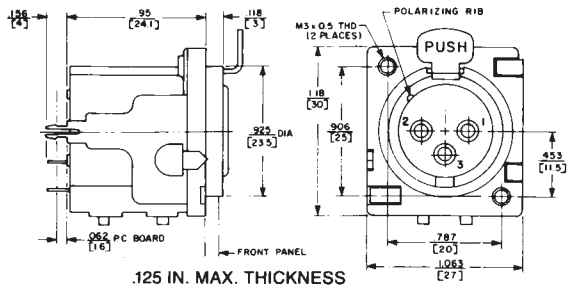


**No. PQG3FSTXXX**

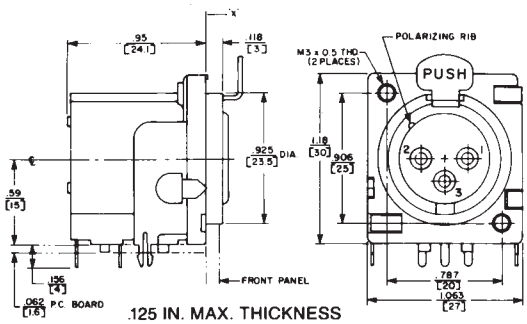


**No. PQG3FRAXXX**

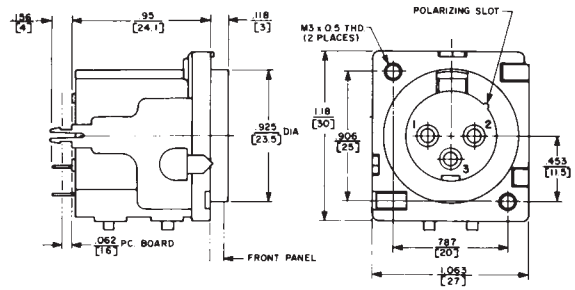


**No. PQG3MSTXXX**

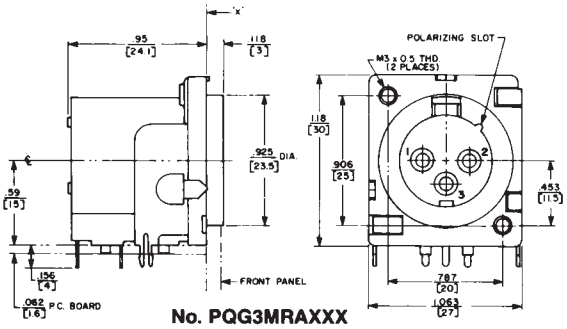


**No. PQG3MRAXXX**

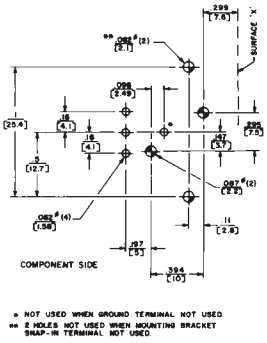


**RECOMMENDED PC BOARD LAYOUT (RIGHT ANGLE)**

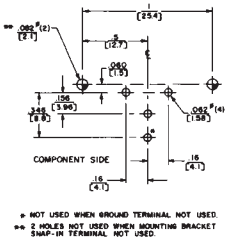


**RECOMMENDED PC BOARD LAYOUT (STRAIGHT)**

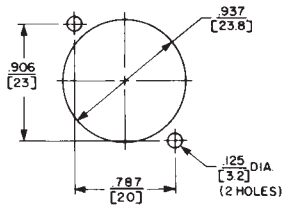


**PANEL OPENING**

DIMENSIONS ARE FOR REFERENCE ONLY Inch (mm)



® Registered trademark of Switchcraft, Inc.
Note: Contact your Switchcraft Representative for price and delivery

* Please visit the product pages on our website for the most up-to-date product information

# Q-G® AUDIO RECEPTACLES FOR PC/PANEL MOUNT

See Next Page for New Solder Cup Option

## PD SERIES - PLASTIC PANEL MOUNT

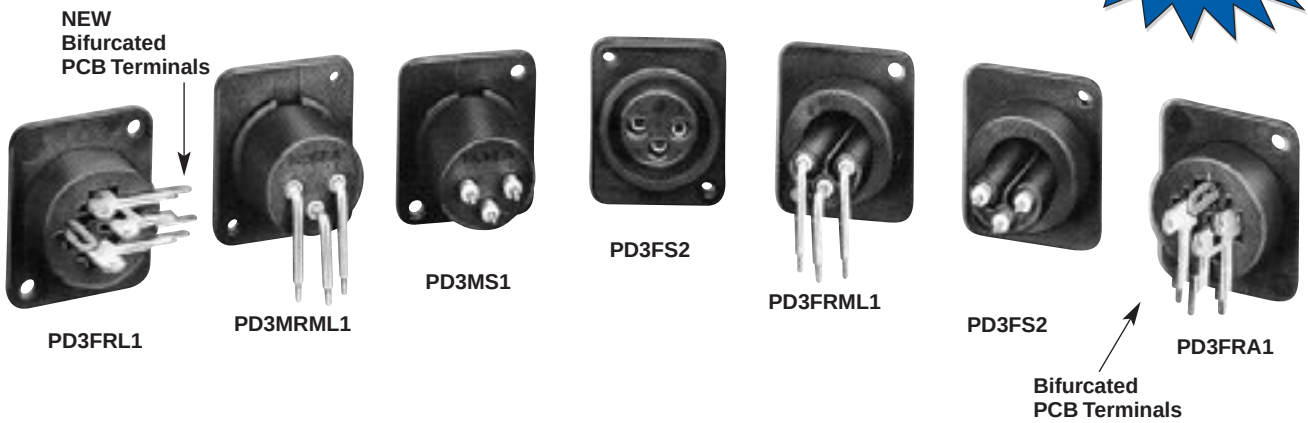


Switchcraft offers the PD Series (plastic panel mount) audio connectors with a wide variety of 3-pin/contact, male and female types and many terminals for combined PC/panel mount. Female types offer larger contact area for higher ratings and longer life. Panel mounting may be at users option, either front or rear. New PD series connectors mate with Switchcraft Q-G and other compatible types.

### PD SERIES FEATURES

- 3 pins/contacts
- Male and female
- Straight and right-angle terminals
- PC or PC/panel mount
- Front or rear panel mount
- Special PC/solder terminal type with exits at 0° (down, 90° (right), 180° (top), and 270° (left)
- Rugged molded black glass-filled thermoplastic housings.

### SPECIFICATIONS

**Housing:** Black molded thermoplastic, glass-filled.
**Ground Pin:** Copper alloy.
**Stamped Terminals/Contacts:** Copper alloy, electrotinned.
**Screw Machine Terminals/Pins:** Copper alloy, silver-plated.

### BIFURCATED PC TERMINALS

Bifurcation configuration for PC terminals on selected connectors offers these advantages.

1. Provides convenient snap-in retention for mounting.
2. Holds connector securely to PCB during wavesoldering.
3. Adds strength to all terminal connections by solder "wicking" through PCB and up sides of terminals.

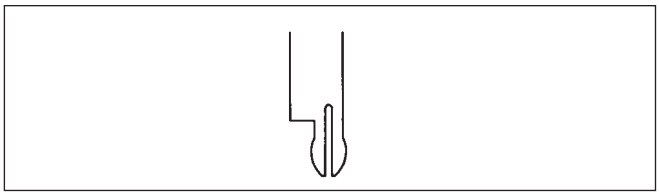

**BIFURCATED HOLD-DOWN FEATURE FOR ALL PC TERMINALS**

DIMENSIONS ARE FOR REFERENCE ONLY Inch (mm)

* Please visit the product pages on our website for the most up-to-date product information

# PD SERIES PART NUMBERING SYSTEM

| P D | 3 | | | | |
|---|---|---|---|---|---|
| SERIES PD | PINS/ CONTACTS | GENDER | GENDER | HOUSING | TERMINALS |

**GENDER**

**F** - Female
**M** - Male

**GENDER**

**FEMALE**
- **RA** - Right-angle, Bottom Exit
- **RL** - Right-angle, Left exit
- **RR** - Right-angle, Right Exit
- **RU** - Right-angle, Top Exit
- **RML** - Right-angle, Bottom Exit, Long Screw Mach. Term.
- **RMS** - Right-angle, Bottom Exit, Short Screw Mach. Term.
- **S** - Straight, Rear Exit
- **SC** - Solder Cup

**MALE**
- **RML** - Right-angle, Bottom Exit, Long Screw Mach. Term.
- **RMS** - Right-angle, Bottom Exit, Short Screw Mach. Term.
- **S** - Straight, Rear Exit
- **SC** - Solder Cup

**HOUSING**
- **1** - Front Mount .11" (2.8 mm) diameter flange mounting holes
- **2** - Rear Mount .091" (2.3 mm) diameter flange mounting holes
- **3** - Front Mount .126" (3.2 mm) diameter flange mounting holes

**TERMINALS**

**Blank=** Silver terminals

**AU=** Gold terminals

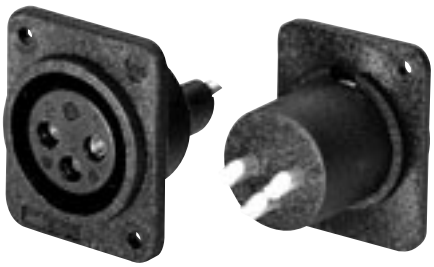

**Note: New solder cup option shown.**

**PD3MS1**
**3-pin male, straight (rear exit) PC terminals. Front mount.**

**PD3MRML2**
**3-pin male, right angle (bottom exit) long screw machine terminals. Panel mount holes not countersunk.**

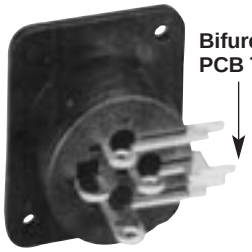

**Bifurcated PCB Terminals**

**PD3FRL1**
**3-contact female, right-angle (left exit) PC/solder terminals. Ground lug. Front panel mount.**

**Bifurcated PCB Terminals**

**PD3FRA1**
**3-contact female, right-angle (bottom exit) PC/solder terminals. Ground lug. Front panel mount.**

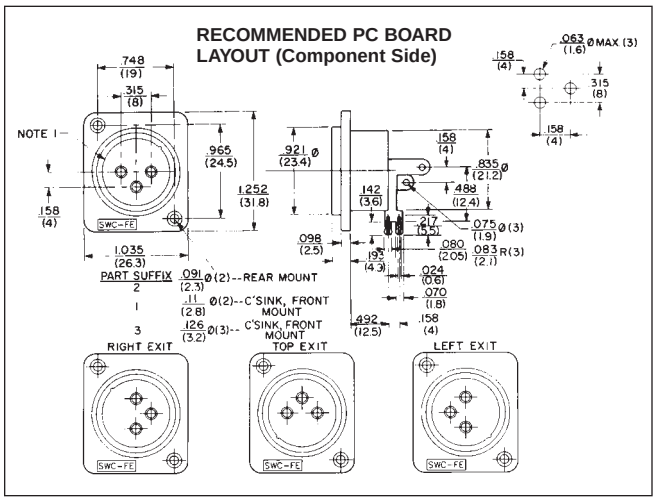


**Numbers PD3FRA1, 2, and 3; PD3FRL1, 2, and 3; PD3FRR1, 2 and 3; PD3FRU1, 2 and 3 (Typical)**

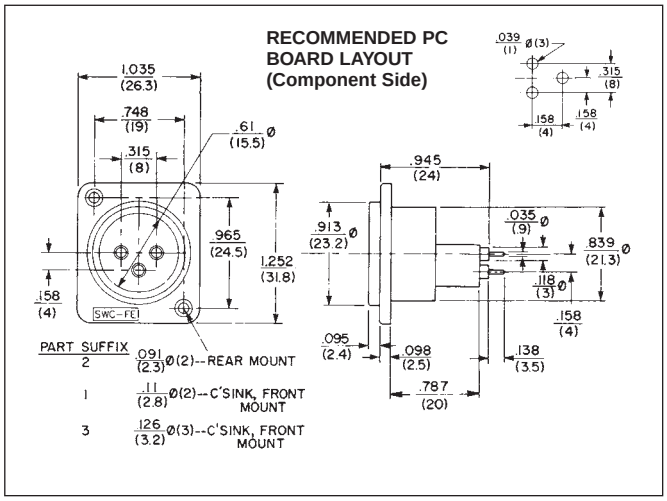


**Numbers PD3FS1, 2, and 3 (Typical)**

DIMENSIONS ARE FOR REFERENCE ONLY Inch (mm)



® Registered trademark of Switchcraft, Inc.

Note: Contact your Switchcraft Representative for price and delivery

* Please visit the product pages on our website for the most up-to-date product information

## PD SERIES (continued)

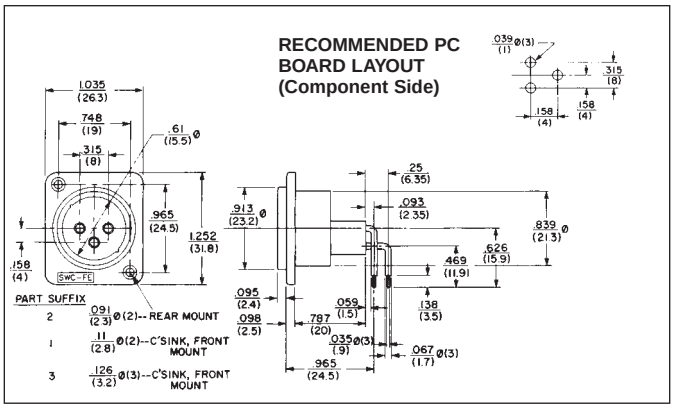


Numbers PD3FRMS1, 2, and 3 (Typical)

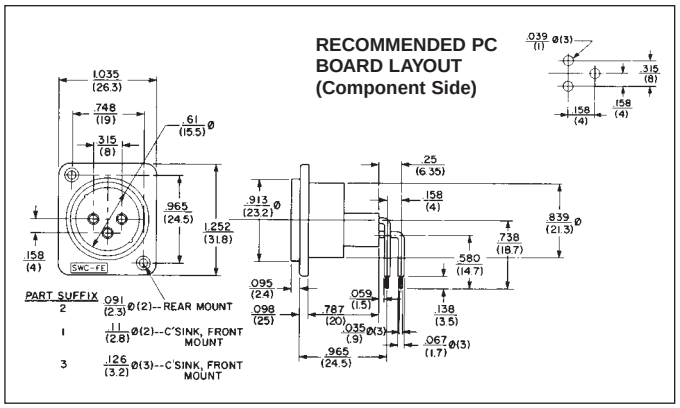


Numbers PD3FRML1, 2, and 3 (Typical)

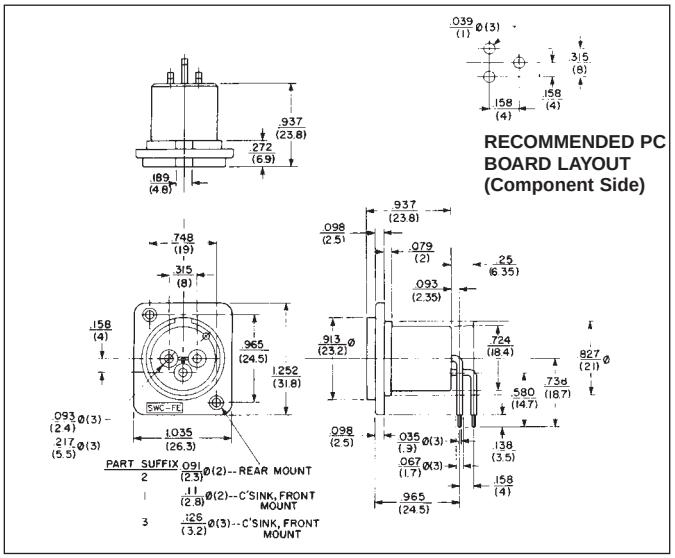


Numbers PD3MRML1, 2, and 3 (Typical)

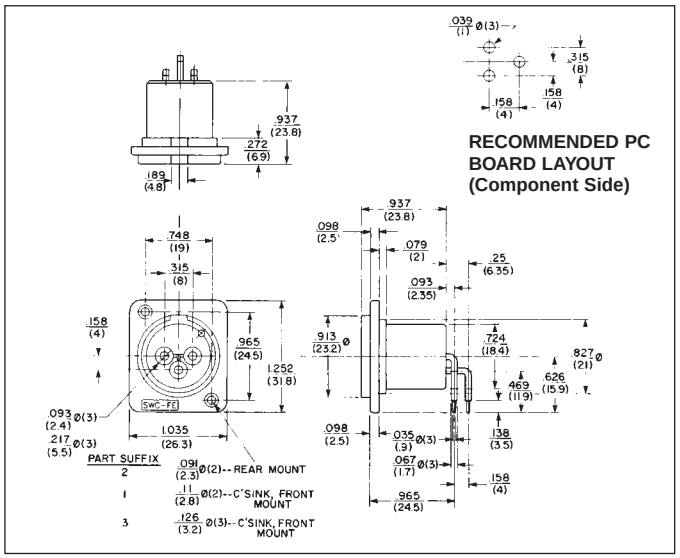


Numbers PD3MRMS1, 2, and 3 (Typical)

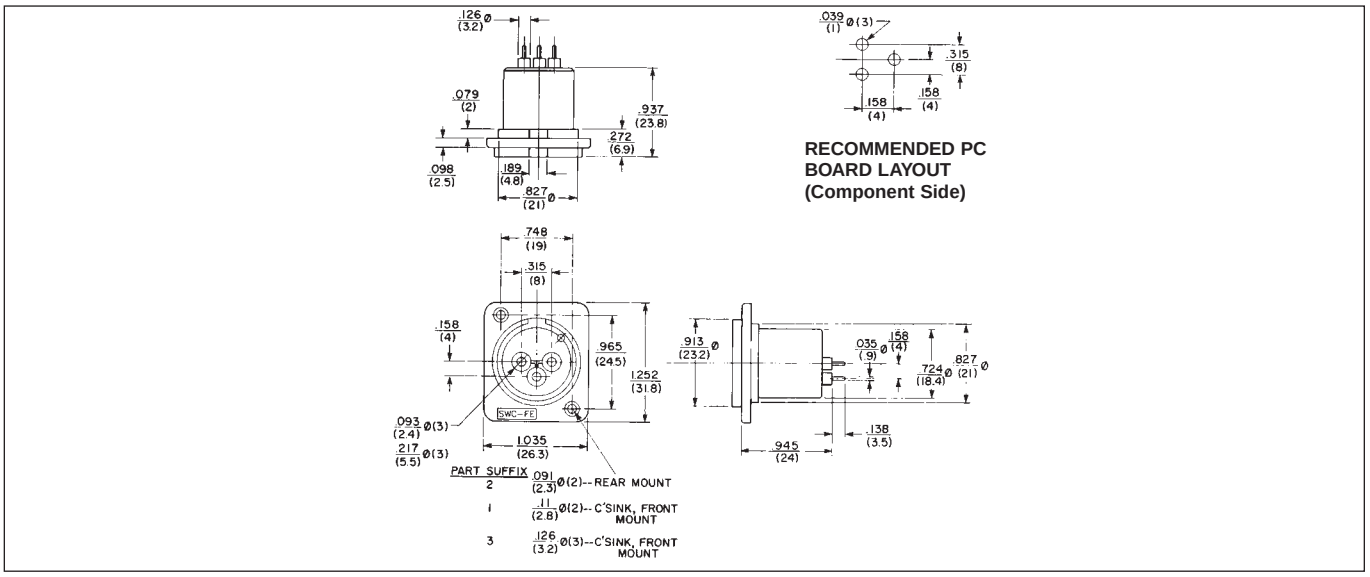


Numbers PD3MS1, 2, and 3 (Typical)

DIMENSIONS ARE FOR REFERENCE ONLY Inch (mm)

* Please visit the product pages on our website for the most up-to-date product information

# Q-G ® RECEPTACLES

## SERIES Y(*)F, Y(3)FPC, Y(*)FD, Y(3)FDPC AND Y(3)MPC RECEPTACLES

Y3MPC

Y3FPC

**Series Y(*)MPC.** Male receptacle for panel or chassis mounting escutcheon. PC terminals and standoffs. Rear of panel mount in .750 inch diameter hole. Maximum panel thickness: 25 inches (6.35 mm); .156 inches (3.96 mm) if YEM escutcheon is used.

**Series Y(*)FPC.** Female receptacle for panel or chassis mounting. PC Terminal and standoffs. Rear of panel mount in .875 inch (22.22 mm) diameter hole.

**Series Y(*)F.** Female receptacle for panel or chassis mounting. Rear of panel mount in .875 inch (22.22 mm) diameter hole.

**Series Y(*)FD, Y(*)FDPC.** Female receptacles. Same as Y(*)F and Y(*)FPC, respectively, except with FAS-DISCONNECT detent.

**Series YEF Escutcheons.** Trim escutcheons provide distinctive panel appearance and can also color code connections. Available in black (standard), red, green, white, and yellow. Other colors possible on special order where production quantities warrant.

### ASSEMBLY/MOUNTING

All receptacles are rear-of-panel mount (units with PC terminals also mount/terminate to PC board). Flange fastens to chassis/panel with two #4-40 machine screws (not supplied). Use of escutcheons is optional.

Install latch release lever (Series Y(*)F and Y(*)FPC) after receptacle is fastened to chassis/panel. Insert lever in slot from front and press inward until it locks (snaps) into place. To remove lever, depress rear of lever (with screwdriver) through opening at top rear of housing and pull lever straight out.

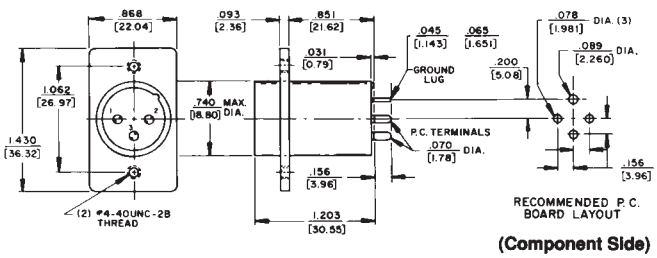


(Component Side)

### RECEPTACLES

| Part Numbers | | Insert Contacts | Part Number Male† | Insert Pins |
|---|---|---|---|---|
| Female Latchlock† | Female Detent† | | | |
| Y3F | Y3FD | 3 | Y3MPC | 3 |

†Suffix letters "PC" indicate PC terminals; all others have solder lugs.

### ESCUTCHEONS

| Part Number | Color | Part Number | Color |
|---|---|---|---|
| ◊YEF01 | Red | YEF04 | Blue |
| YEF02 | Black | ◊YEF05 | White |
| ◊YEF03 | Green | ◊YEF08 | Yellow |

**SPECIFYING NOTE:** YEM02 escutcheon can be ordered on special order; contact Switchcraft.

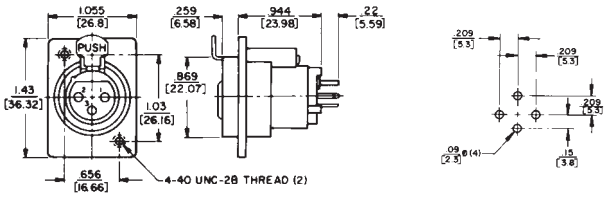

YEF02
ESCUTCHEONS

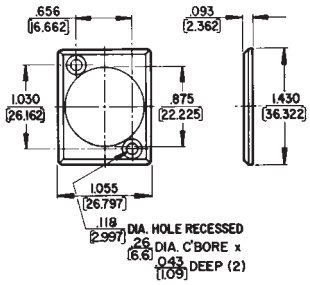


DIMENSIONS ARE FOR REFERENCE ONLY Inch (mm)



® Registered trademark of Switchcraft, Inc.

Note: Contact your Switchcraft Representative for price and delivery

* Please visit the product pages on our website for the most up-to-date product information

# F SERIES RECEPTACLES

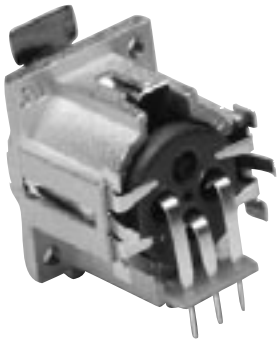

F3FRAF

F3MSTF

F3FSTF

Switchcraft now offers the F Series. Available in male and female, the receptacles can be mounted from the rear of the panel. Features include an all metal housing with a ferrite disk for added EMI/RMI shielding. Both male and female connectors can be mounted vertical or horizontal to the PC board. All connectors have a PC-board retention feature to hold the connectors firmly to the PC board prior to soldering. See the chart below for part numbers.

## F SERIES FEATURES

- Replaces Cannon XLM-Series
- 3-pin contact; male and female types
- Both male and female fit in same panel cutout
- Locking receptacles
- Silver-plated contacts
- Rugged metal shells; satin nickel finishes
- Through-the-shell ground connection and all-metal shells for greater shielding effectiveness
- Compatible with Switchcraft Q-G®, QGP and other connectors with similar configurations
- Added EMI/RFI ferrite shield

| Part Number | Terminals | Contacts | Housing | Type |
|---|---|---|---|---|
| F3MSTF | Straight | Silver | Satin Nickel | M |
| F3FSTF | | | | F |
| F3MRAF | Right Angle | | | M |
| F3FRAF | | | | F |

## SPECIFICATIONS:

### ELECTRICAL

**Contact Resistance:** 50 milliohms maximum, per pole.
**Current Rating:** 15A
**Insulation Resistance:** 1,000 MΩ
**Dielectric Resistance:** 1,000 V rms
**Capacitance:** 2 to 4 pF

### MECHANICAL

**Insertion/Withdrawal Forces:** 7 pounds maximum/nominal
**Insertion:** 7 pounds maximum withdrawal.
**Life:** 10,000 operations (minimum).

### ENVIRONMENTAL

**Thermal Range:** -55° C to +85° C
**Thermal Shock:** Meets MIL-STD-202F, method 107D
**Salt Spray:** Meets MIL-STD-202F, method 101D (for 16 hrs.)

### MATERIAL

**Shells:** Die-cast; satin-nickel plated
**Inserts:** Glass-filled thermoplastic.
**Socket Contacts:** Copper alloy, silver-plated.
**Pin Contacts:** Copper alloy, silver-plated.
**Latch Release:** Steel, nickel-plated.

### TERMINALS

Two terminations are available on F-Series receptacles:

1. Straight PC-terminals – direct termination to PC-board. Housing mounts to panel.
2. Right Angle PC terminals – direct termination to PC-board at right angle. Housing mounts to panel.

DIMENSIONS ARE FOR REFERENCE ONLY Inch (mm)

* Please visit the product pages on our website for the most up-to-date product information

## F SERIES RECEPTACLES (continued)

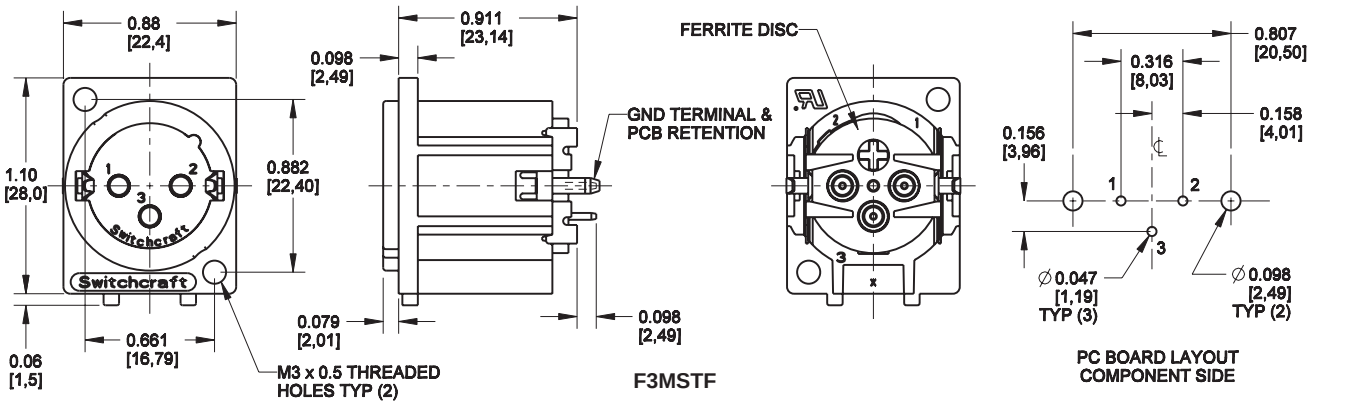


F3MSTF

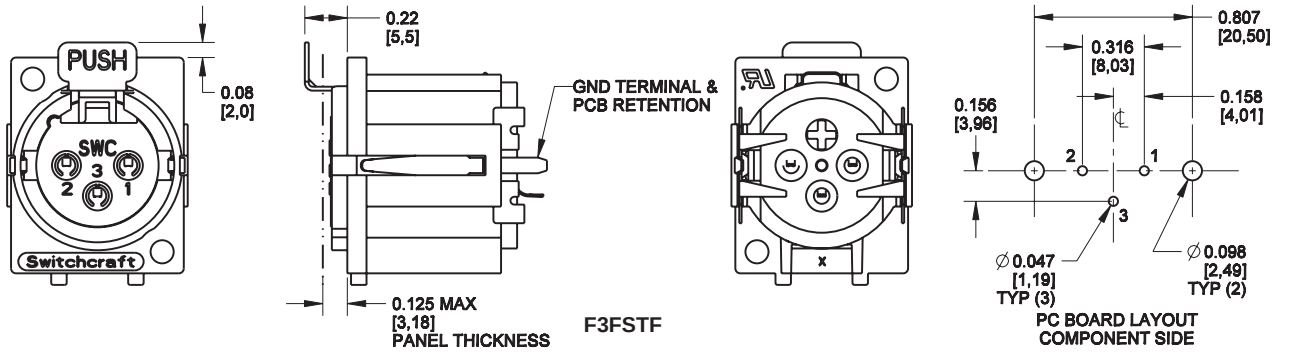


F3FSTF

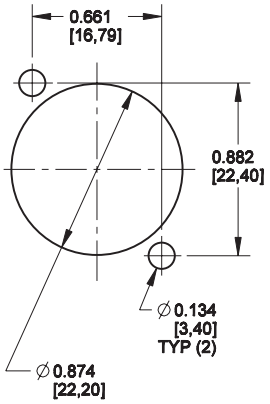


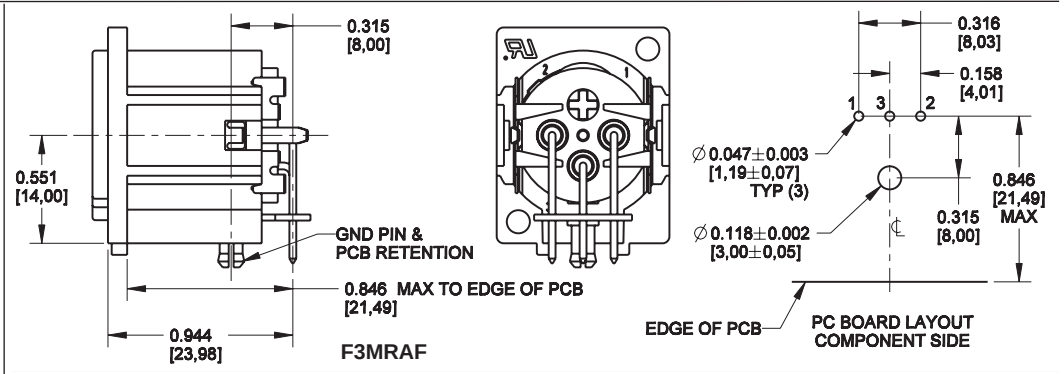


F3MRAF

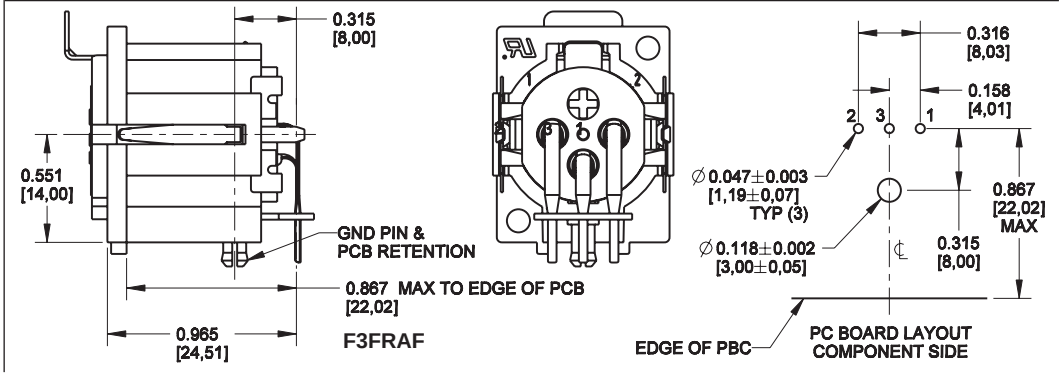


F3FRAF

DIMENSIONS ARE FOR REFERENCE ONLY Inch (mm)


® Registered trademark of Switchcraft, Inc.
Note: Contact your Switchcraft Representative for price and delivery

* Please visit the product pages on our website for the most up-to-date product information

# Q-G® ADAPTERS, ACCESSORIES

## Q-G® CONNECTOR INSERTS

Male and female Q-G ® inserts with 3-7 pins/contacts, fit appropriate plug and receptacle housings. Female inserts available with standard latchlock or FAS-DISCONNECT detent mating, and with solder or PC terminals. Intended for replacement, or building into equipment such as microphones and transducers.

| Standard Latchlock | FAS-* DISCONNECT | Male Inserts | Insert Pins/ Contacts |
|---|---|---|---|
| — | ◊ QG3FDPC | — | 3 |
| QG3F | QG3FD | QG3M | 3 |
| QG4F | QG4FD | QG4M | 4 |
| QG5F | QG5FD | QG5M | 5 |
| QG6F | QG6FD | QG6M | 6 |
| QG7F | QG7FD | QG7M | 7 |

*Suffix letters "PC" indicate PC terminals; all others (except "S") have solder lugs.
**Suffix letter "S" indicates locking PC terminal and plastic housing.
◊ Special order only. Contact Switchcraft.

**Note: Add suffix "BAU" for black insert with gold-plated contacts.**

## W(*)M RECEPTACLE

Right-angle male panel receptacle.
Mounts with two, #5-40 machine screws.

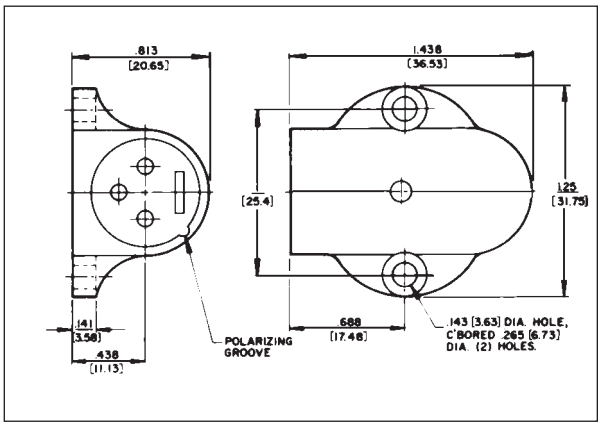


| Part Number | Insert Pins |
|---|---|
| W3M | 3 |
| W4M | 4 |

## SHORTING PLUG

3-pin plug shorts out unused hi-Z microphone inputs or other sensitive circuits (shorting jumper installed between pins 2 and 3). 6" (152.4 mm) chain fastened to end pin to prevent plug loss. Switchcraft can install special wiring for a nominal extra charge.

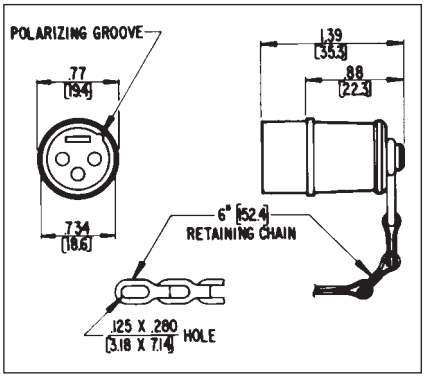


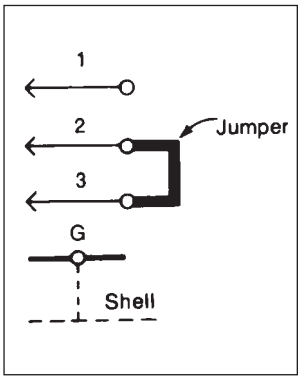


| Part Number | Insert Pins |
|---|---|
| ◊N3MS | 3 |

◊ Available on special order only; contact Switchcraft for price and delivery.

DIMENSIONS ARE FOR REFERENCE ONLY Inch (mm)

* Please visit the product pages on our website for the most up-to-date product information



# Q-G® WALL PLATE RECEPTACLES

## G(*)M WALL PLATE RECEPTACLE

Wall plate with one B3M or B4M male receptacle mounted (in "D"-shaped hole to prevent turning) on standard single electrical outlet box. Cover mounting screws included.

| Part Number | Finish | Insert Pins |
|---|---|---|
| G3MS | Stainless Steel | 3 |
| ◊G4MS | | 4 |

◊ Special order only. Contact Switchcraft.

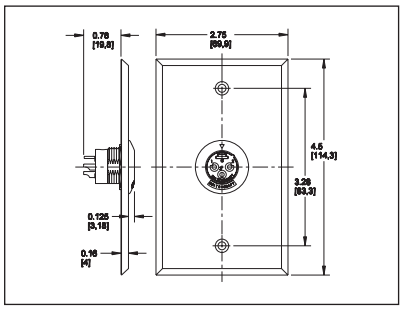


## J(*)F WALL PLATE RECEPTACLE

Wall plate with one, D3F or D4F female receptacle. Mounts on standard single electrical outlet box. Cover mounting screws included.

| Part Number | Finish | Insert Pins |
|---|---|---|
| J3FS | Stainless Steel | 3 |
| ◊J4MS | | 4 |

◊ Special order only. Contact Switchcraft.

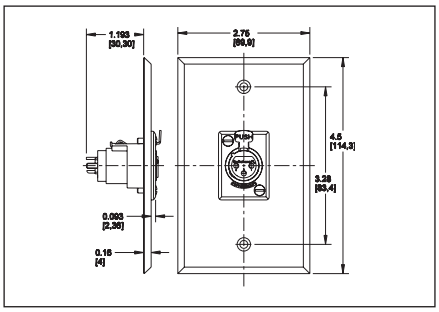


## H(*)M WALL PLATE RECEPTACLE

Wall plate with two, B3M or B4M male receptacles mounted (in "D"-shaped holes to prevent turning) on standard single electrical outlet box. Cover mounting screws included.

| Part Number | Finish | Insert Pins |
|---|---|---|
| ◊H3MS | Stainless Steel | 3 |
| ◊H4MS | | 4 |

◊ Special order only. Contact Switchcraft.

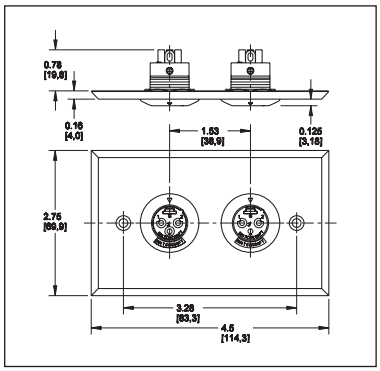


## K(*)F WALL PLATE RECEPTACLE

Wall plate with two, D3F or D4F female receptacles. Mounts on standard single electrical outlet box. Cover mounting screws included.

| Part Number | Finish | Insert Pins |
|---|---|---|
| K3FS | Stainless Steel | 3 |
| ◊K4FS | | 4 |

◊ Special order only. Contact Switchcraft.

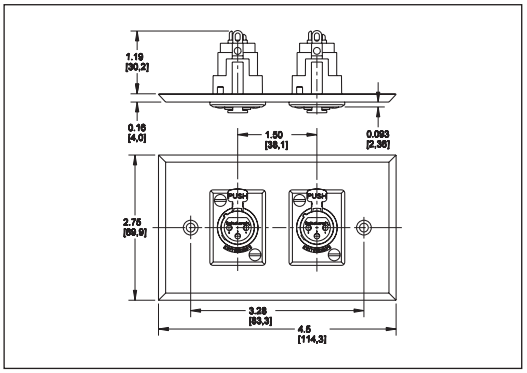


DIMENSIONS ARE FOR REFERENCE ONLY Inch (mm)



® Registered trademark of Switchcraft, Inc.
Note: Contact your Switchcraft Representative for price and delivery

* Please visit the product pages on our website for the most up-to-date product information

# Q-G® CONNECTOR-ADAPTERS

321 322 323 324 383A 384A

Switchcraft Q-G® Connector-Adapters, designed to solve common interconnection problems, are ideally suited to the interconnection of microphones, mixers, amplifiers, public address and sound reinforcement equipment, broadcast equipment, and any other component that does not have an appropriate mating connector. All are completely shielded, and incorporate the high quality and outstanding design features of the Switchcraft line of Q-G Audio Connectors, including:

1. Separate ground terminal.
2. Ground Contactors.
3. Captive Design® Insert Screw
4. High impact Thermoplastic Insulation.

## MATERIAL SPECIFICATIONS

## PHONE JACK AND PLUG TERMINATIONS

**Shell:** Copper alloy, nickel-plated.
**Insulation:** Paper-base phenolic.
**Plug Tip and Sleeve:** Copper alloy, nickel-plated.
**Phone Pin and Plug Housing:** Copper alloy, nickel-plated.
**Phono Plug Insulation:** Rigid plastic.
**Phono Jack Housing:** Steel, copper alloy-plated, tarnish-resistant.
**Phono Jack Pin Receptacle:** Brass, silver-plated, copper alloy.
**Phono Jack Insulation:** Thermoplastic.

**321.** Phono plug to 3-contact female audio-connector (Switchcraft® A3F).

**322.** Phono jack to 3-contact female audio-connector (Switchcraft® A3F).

**323.** Phono plug to 3-pin male audio-connector (Switchcraft A3M).

**324.** Phono jack to 3-pin male audio-connector (Switchcraft® A3M).

**383A.** Three-contact female audio-connector (Switchcraft® A3F) to standard .250" (6.35 mm) diameter 3-conductor extension phone jack.

**384A.** Three-pin male audio connector (Switchcraft® A3M) to standard .250" (6.35 mm) diameter 3-conductor extension phone jack.

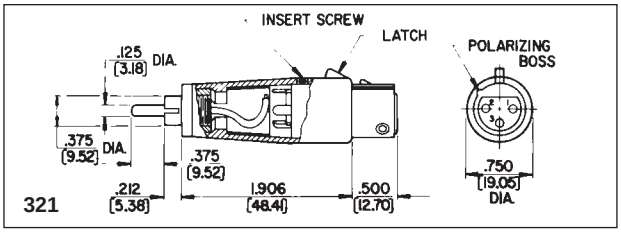

321

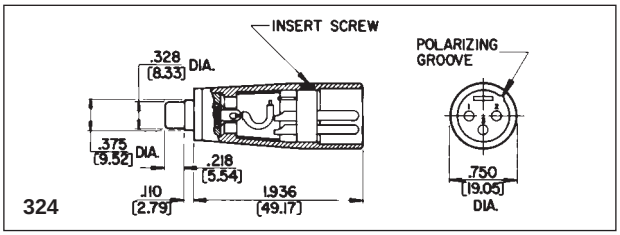

324

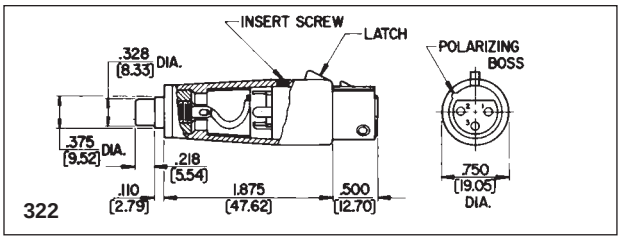

322

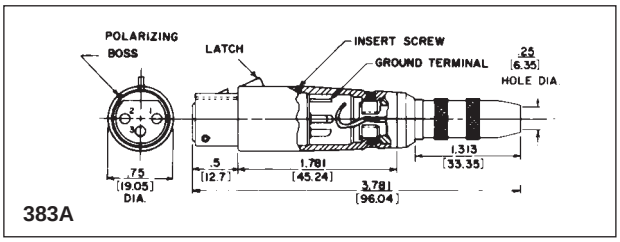

383A

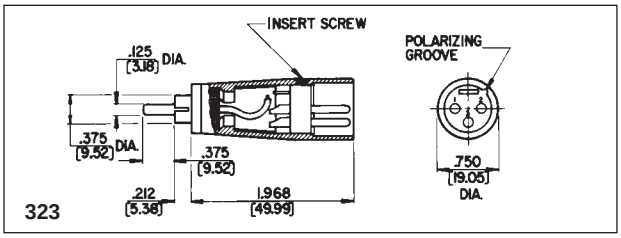

323

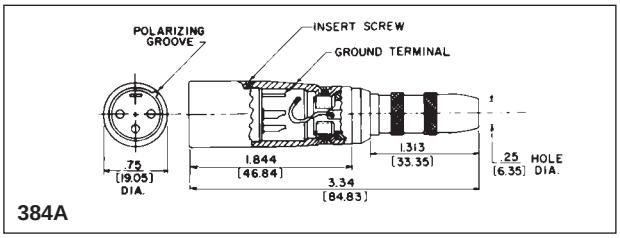

384A

DIMENSIONS ARE FOR REFERENCE ONLY Inch (mm)

* Please visit the product pages on our website for the most up-to-date product information

## Q-G® AUDIO CONNECTOR-ADAPTERS

**386A:** Three-contact female audio connector (Switchcraft® A3F) to standard .250" (6.35 mm) diameter 3-conductor phone plug.

**387A:** Three-pin male audio connector (Switchcraft® A3M) to standard .250" (6.35 mm) diameter 3-conductor phone plug.

**389:** Three-contact female audio connector (Switchcraft® A3F) at both ends. Pre-wired contacts: 1 to 1, 2 to 2, 3 to 3.

**390:** Three-pin male audio connector (Switchcraft® A3M) at both ends. Prewired pins: 1 to 1, 2 to 2, 3 to 3.

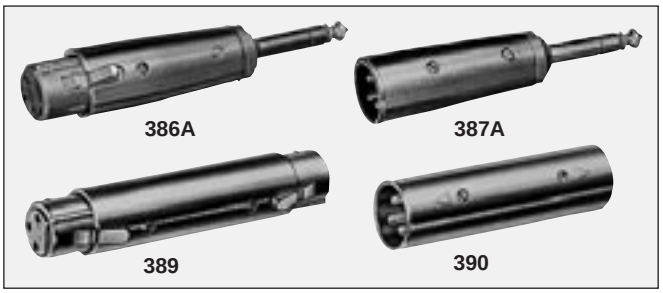


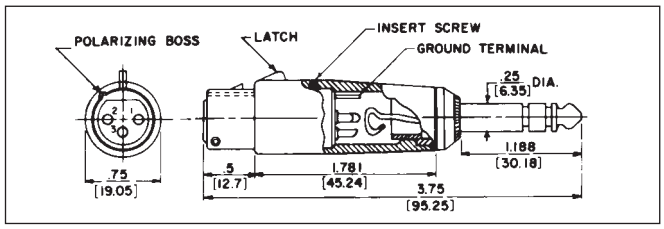


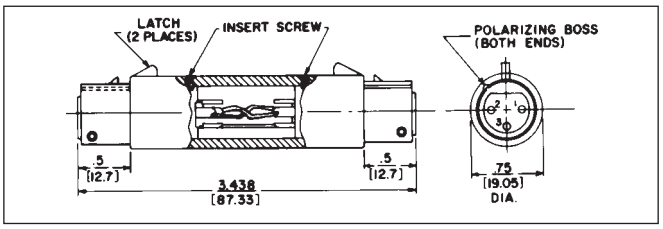


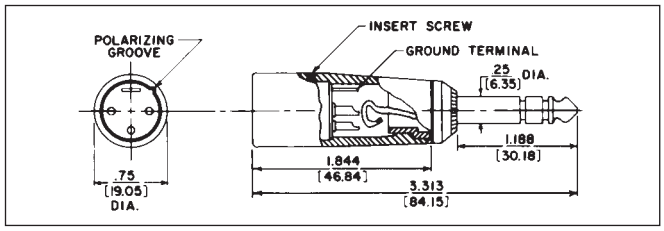


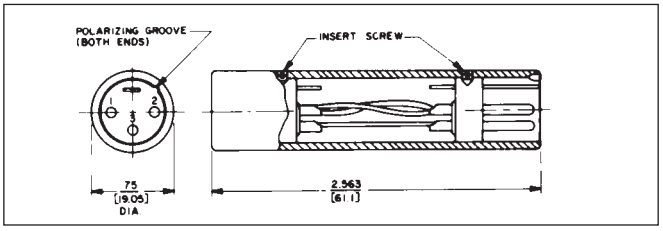


## S*FM AUDIO CONNECTOR-ADAPTER

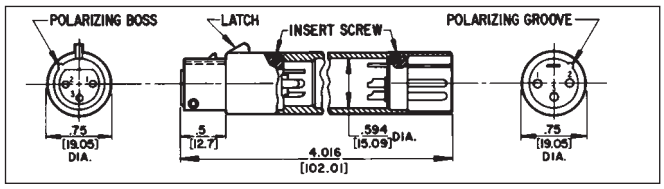


Male-female connector conversion has male Q-G® insert at one end and corresponding female Q-G® insert at the other. Designed to accept internally connected transformer, attenuator, or other circuitry inline with microphone input. Includes 1.50" (38.1 mm) long x .594" (15.08 mm) diameter of usable internal volume.

| Part Number | Female Insert | Male Insert | Insert Pins/Contacts |
|---|---|---|---|
| S3FM | QG3F | QG3M | 3 |
| ◊S4FM | QG4F | QG4M | 4 |
| ◊S5FM | QG5F | QG5M | 5 |

◊ Available on special order only; contact Switchcraft for price and delivery.

## AUDIO "Y" ADAPTERS

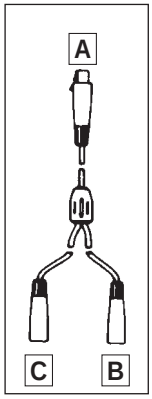


Series 391Q Y-Adapters can combine or split typical audio signals using a combination of Switchcraft Q-G® A3F and A3M cord plugs. Outputs of two microphones can conveniently be connected in parallel and connected to a single input using a 391Q23 Y-Adapter. Cabling is 2-conductor shielded, 2-foot long gray jacket with molded Y-junction at center point. Mates with Switchcraft Q-G® and QGP® connectors.

| Part Number | Q-G® Cord Plug Part Numbers | | |
|---|---|---|---|
| | Plug A | Plug B | Plug C |
| 391Q13 | A3F | A3M | A3M |
| ◊391Q23 | A3F | A3M | A3F |
| ◊391Q33 | A3F | A3F | A3F |
| 391Q43 | A3M | A3F | A3F |
| ◊391Q53 | A3M | A3F | A3M |
| ◊391Q63 | A3M | A3M | A3M |

Note: "Y" adapters may use either series A(*) or AA(*) plugs.
◊ Available on special order only; contact Switchcraft for price and delivery.

DIMENSIONS ARE FOR REFERENCE ONLY Inch (mm)


® Registered trademark of Switchcraft, Inc.
Note: Contact your Switchcraft Representative for price and delivery

* Please visit the product pages on our website for the most up-to-date product information

# DMX ADAPTER

Switchcraft introduces our new series of DMX adapters. The DMX adapters were developed for use in the theater lighting industry. The adapters allow the end user to use standard 3 pin XLR cable assemblies in connecting DMX equipment. The adapters are available in 3 pin male to 5 pin female and 5 pin male to 3 pin female. All are wired "straight through."

## FEATURES AND BENEFITS

- Nickel-plated die-cast housing increases durability
- Pre-wired for immediate use
- Available in two configurations

## APPLICATIONS

- Theater lighting
- Any DMX application

## SPECIFICATIONS

**Shell:** Die-cast zinc, satin nickel finish
**Insert Insulation:** Molded thermoplastic
**Socket contacts:** Silver-plated copper alloy, tarnish-resistant
**Pin contacts:** Sliver-plated copper alloy, tarnish-resistant

## ORDERING INFORMATION

| | |
|---|---|
| S3F5M | 3 pin female to 5 pin male |
| S5F3M | 5 pin female to 3 pin male |

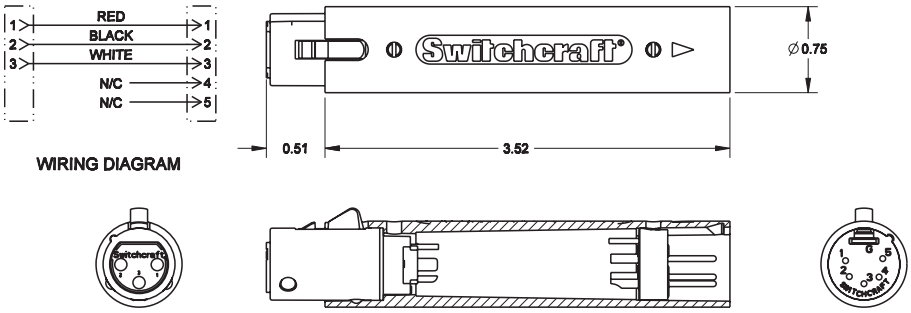


**S3F5M**
**3 PIN FEMALE TO 5 PIN MALE DMX ADAPTER**

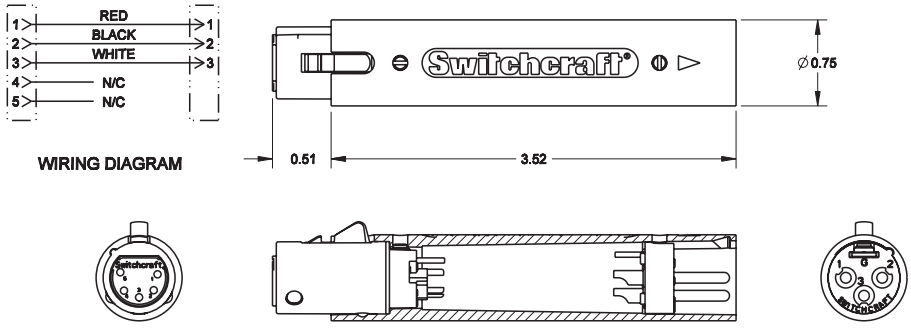


**S5F3M**
**5 PIN FEMALE TO 3 PIN MALE DMX ADAPTER**

DIMENSIONS ARE FOR REFERENCE ONLY Inch (mm)

* Please visit the product pages on our website for the most up-to-date product information

# Q-G® CONNECTOR-ADAPTER RECEPTACLES

Adapter receptacles mount directly to microphones or similar equipment to provide highly reliable 3-, 4- and 5-pin Switchcraft Q-G® connections. Adapter shell and coupling nut are brass, satin nickel finish.

### SERIES L(*)MN

Male has plain cylindrical shell with knurled, internally threaded collar to engage external 13/16-27 threads on microphone body.

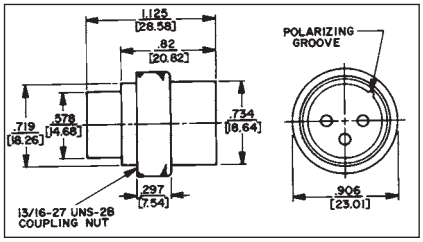


### SERIES M(*)M

Male with shell having 13/16-27 external threads to engage equipment with internally threaded body. Terminals extend out rear (threaded end) to permit wiring without disassembly.

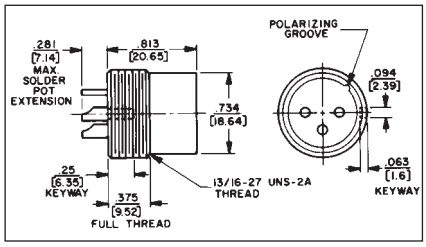


| Part Numbers | | |
|---|---|---|
| Series L(*)MN | Series M(*)M | Insert Pins |
| ◊L3MN | ◊M3M | 3 |
| ◊L4MN | ◊M4M | 4 |
| ◊L5MN | ◊M5M | 5 |

### SPECIFYING FEATURES

- Plug-in impedance changes
- Fully wired
- Connections bi-directional (low to high impedance or high to low impedance)
- Rugged die-cast housings
- Mu-metal shielding

### MATERIAL SPECIFICATIONS

**Shell:** Die-cast zinc shell, nickel-plated with black non-glare metalized foil label.
**Shielding:** Mu-metal.
**Dimensions:** Diameter–.75" (19.05 mm) nominal Length – 3" (76.2 mm) nominal (Part Number 92XX); 3.375" (85.73 mm) nominal (Part Number 91XX).

### ELECTRICAL SPECIFICATIONS

**Frequency Response:** Flat–20 Hz to 20 kHz ± 2 decibels
**Impedance:** High–50 K ohms (nominal); Low–150 ohms (nominal)
**Voltage Step Ratio (Input Power Level);** Low to High: +29 decibels (typical); high to low: -29 decibels (typical)

# Z MATCHING TRANSFORMERS

9144

9244

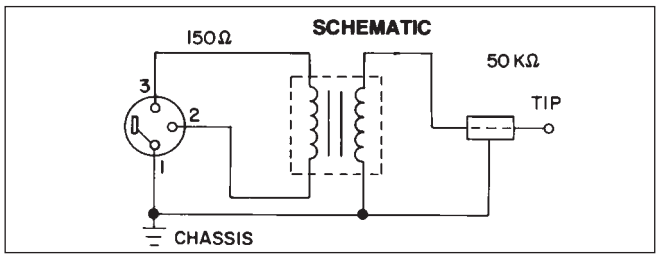


Series 9000 Line Matching Transformers offer low-loss interconnections between high and low impedance equipment. Exclusive mu-metal shielding protects against spurious electrostatic and RF fields. Units are bi-directional and can be used as follows:

- Low to hi, such as professional low impedance microphones to high impedance amplifiers. Stereos, cassette recorders, public address systems, and mixers.
- Hi to low, such as high impedance microphones or electronic instruments to low impedance amplifiers or mixers.

Designed to mate with Switchcraft Q-G® connectors. Available with various terminations; see chart.

| Part Number | Switchcraft Connector | |
|---|---|---|
| ◊9115 | **Lo Z:** 3-contact Q-G® female, A3F | **Hi Z:** 2-conductor phone plug, 1/4" finger diameter, right angle handle, 4" extension (shielded) cable |
| ◊9129 | **Lo Z:** 3-contact Q-G® female, A3F | **Hi Z:** 2-conductor phono plug, right angle handle, 4 inch extension (shielded) cable |
| 9144 | **Lo Z:** 3-contact Q-G® female, A3F | **Hi Z:** 2-conductor phone plug, 1/4" finger diameter |
| 9244 | **Lo Z:** 3-pin Q-G® male, A3M | |

◊ Available on special order only; contact Switchcraft for price and delivery.

DIMENSIONS ARE FOR REFERENCE ONLY Inch (mm)


® Registered trademark of Switchcraft, Inc.
Note: Contact your Switchcraft Representative for price and delivery

* Please visit the product pages on our website for the most up-to-date product information

# TINI Q-G® MINIATURE CONNECTORS

**Series TA(*)F, TA(*)FB, TA(*)FL and TA(*)FLB** – Straight female cord plug
**Series TA(*)M, TA(*)MB, TA(*)ML and TA(*)MLB** – Straight male cord plug
**Series TB(*)M and TB(*)MB** – Chassis/panel mount male receptacle
**Series TY(*)F and TY(*)FPC** – Chassis/panel, female receptacle, choice of solder lugs or P.C. terminations.
**Series TLP** – Looping Plugs
**Series TBA(* *)** – Audio Adapters
**Series TRA(*)M** – PC Mount Male Receptacles
**Series TRG(*)** – Reverse Gender Panel Mount, Cord Mount

TA3F

TA3M

## DESIGN FEATURES

**STYLE** – Streamlined, miniaturized with nickel-plated metal and contrasting black plastic parts. Designed for light weight and unobtrusiveness. Also available in conductive black chrome finish.

**CONSTRUCTION** – Metal parts are rugged die-cast or precision machined with nickel-plating; plastic parts are molded of high dimensional-stability thermoplastic. Advanced design assures minimum weight consistent with strength and durability of cord plug housings of .413" (10.5 mm) diameter Weight: Series TA(*)F plug = .25 ounce (7 g); Series TA(*)M = .3 ounce (8.5 g).

**INSERTS** – Precision molded of thermoplastic for high mechanical and dielectric strength. Contacts and terminals are precision formed and plated for intimate contact and low resistance connections. Terminal numbers are molded on rear of male insert and on face of female insert for easy identification (except 6-pin male insert). Inserts can be supplied for OEM installation in microphones and instrumentation for optimum connecting reliability. For cord plugs, inserts can also be supplied for replacements.

**LATCHLOCK** – Positive latch system assures high integrity, vibration-resistant mating and transfer of shielding connection between housing, combined with simple, easy fingertip release.

**STRAIN RELIEF** – Rugged internal clamp holds cable tightly, while making a secure, low resistance connection between cable shield and housing.

**FLEX RELIEF** – Protects by minimizing cable bending stress at point of cable entry. Maximum recommended cable diameter is .115" (2.92 mm) when flex relief is used. By omitting flex relief (Series T(*)FL and T(*)ML only), cable up to .170" (4.32 mm) diameter can be used.

**ASSEMBLY** – Connector parts are mechanically keyed for simple assembly.

**POLARIZATION** – Mating male and female connectors are also mechanically keyed (latch and groove) so that it is impossible to mate them incorrectly.

**"SCOOP-PROOF" FEATURE** – Fully recessed pins on male plugs and receptacles cannot be "scooped", bent or damaged by accidental mismating with mating connector.

**COLOR ESCUTCHEONS** – Attractive color escutcheons, Series TYEF, are recommended for use with Series TY(*)F and TY(*)FPC receptacles (when rear mounted) for attractive panel trim, as well as color coding one or more connectors. Colors are: red, black, gray, green, blue, white and yellow.

**CUSTOM Tini Q-G® CABLE ASSEMBLIES** – On special order where production quantities warrant, Switchcraft can supply assembled and tested Tini Q-G® cables.

**MOUNTING**
**Panel/Chassis Thickness:**
Series TB(*)M: .25" (6.35 mm) maximum
**Series TY(*)F:**
Front—.375" (9.5 mm) maximum
Rear—.093" (2.3 mm) maximum
**Series TY(*)FPC:**
Front—.312" (7.9 mm) maximum
Rear—.093" (2.3 mm) maximum

# TINI Q-G ® AUDIO ADAPTERS

Series TA Tini Q-G ® audio adapters have been designed to adapt Tini Q-G ® connections to standard audio connectors. Tini Q-G ® adapters convert to Switchcraft Q-G ® and QGP connectors and similar full-size connectors.

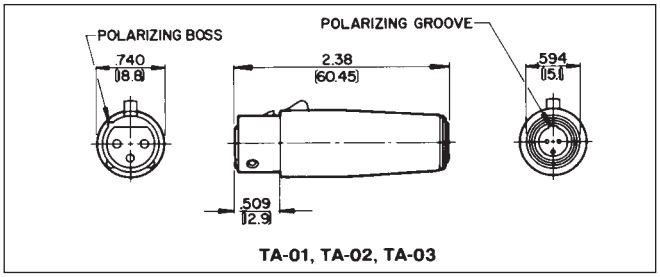

TA-01, TA-02, TA-03

| Part Number | Tini Q-G ® End Mates With | Q-G ® End Mates With |
|---|---|---|
| ◊TA01 | TA3F | A3M |
| ◊TA02 | TA4F | A4M |
| ◊TA03 | TA5F | A5M |
| ◊TA04 | TA3F | A3F |
| ◊TA05 | TA4F | A4F |
| ◊TA06 | TA5F | A5F |

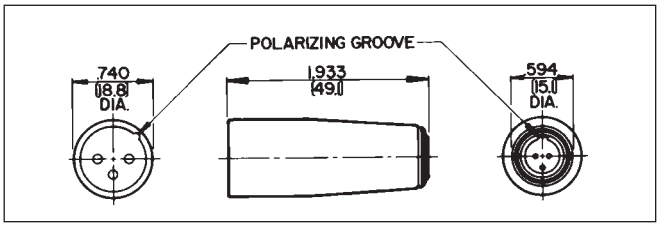


DIMENSIONS ARE FOR REFERENCE ONLY Inch (mm)

* Please visit the product pages on our website for the most up-to-date product information

# TINI Q-G® MINIATURE CONNECTORS (continued)

## SPECIFICATIONS: (3 – 5 CORD MOUNT ONLY)

### ELECTRICAL

**Contact Resistance:** .010 ohms maximum after life (and after salt spray).
**Current Rating (Carry Only):** 5 A, 125 V AC (4 A, 125 V AC on 5 circuit) based on 30°C maximum.
**Insulation Resistance:** 510,000 megohms minimum @ 500 V DC (initial); 10,000 megohms minimum (after humidity test).
**Dielectric Strength:** 1,000 V (rms).

### MECHANICAL

**Life:** 5,000 operations minimum
**Insertion/Withdrawal Forces (after life):** 6.1 lb./2.77 kg after life, insertion; 5.6 lb/2.54 kg, withdrawal.
**Solderability Standard:** Meets EIA RS-186-9E.
**Mechanical Shock:** Meets MIL-STD-202, method 213B.
**Vibration:** Meets MIL-STD-202, method 201A.
**Wire Size:** #22 wire gauge solid; #24 wire gauge stranded.

### ENVIRONMENTAL

**Thermal Range:** -55°C to + 85°C.
**Humidity:** Meets MIL-STD-202, method 106D.
**Thermal Shock:** Meets MIL-STD-202, method 107D.
**Salt Spray:** Meets MIL-STD-202, method 101.

### MATERIAL

**Housing, Plugs and Male Receptacles:** Copper alloy, nickel-plated. Female Receptacle–Die-cast zinc, nickel-plated.
**Black Tini Q-G® Housing:** Copper alloy, black chrome-plated.
**Pin and Socket Contacts:** Copper alloy, silver-plated.
**Flex Relief:** Molded black thermoplastic elastomer.
**Latch Button:** Molded black thermoplastic.
**Release Lever and Mounting Washer:** Steel, nickel-plated.
**Standoff/Ground Terminal and Cable Clamp:** Steel, electrotinned.
**Inserts and Insulating Spacer:** Molded, high strength thermoplastic.
**Latch (Female):** Copper alloy, nickel-plated.
**Mounting Nut:** Copper alloy, nickel-plated.

## SPECIFICATIONS:

**(6 – 8 Cord Mount and all Receptacles and Adapters)**

### ELECTRICAL

**Contact Resistance:** .010 ohm maximum after life.
**Current Rating (Carry only):** 1.5A, 125 VAC, based on 30° maximum
**Insulation Resistance:** 510,000 MΩ minimum @ 500 VDC (initial).
**Dielectric Strength:** 250 V rms.

### MECHANICAL

**Life:** 2,000 operations
**Insertion/Withdrawal Forces (after life):** –13 pound insertion; –13 pound maximum withdrawal
**Solderability Standard:** Meets EIA RS-186-9E.
**Wire Size:** 28 wire gauge stranded.

### MATERIAL

**Housings, Plugs and Male Receptacles:** Copper alloy, nickel-plated.
**Socket Contacts:** Copper alloy, silver-plated.
**Pin Contacts:** Copper alloy, electrotinned.
**Flex Relief and Latch Button:** Molded thermoplastic.
**Ground Terminal:** Copper alloy, electrotinned.
**Inserts and Insulating Spacer:** Molded high strength thermoplastic, UL 94 V-0.
**Latch (Female):** Copper alloy, nickel-plated.
**Mounting Nut:** Copper alloy, nickel-plated.
**Ferrite:** 43 material, shielded head.
**Frame:** Molded thermoplastic, UL 94 V-0.

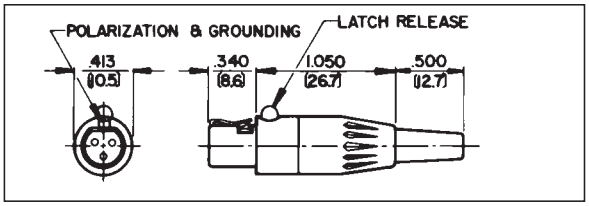


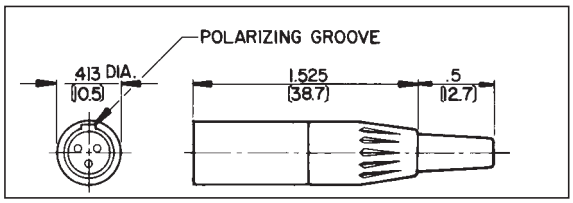


## STRAIGHT FEMALE CORD PLUG

| Part Number | Insert Contacts | Part Number | Insert Contacts[2] |
|---|---|---|---|
| TA3F | 3 | TA4FLB* | 4 |
| TA3FB* | 3 | TA5F | 5 |
| TA3FL[1] | 3 | TA5FL[1] | 5 |
| TA3FLB* | 3 | TA5FLB* | 5 |
| TA4F | 4 | TA6FL[1] | 6 |
| TA4FB* | 4 | TA7FL | 7 |
| TA4FL[1] | 4 | TA8FL | 8 |

1 Flex relief omitted for larger diameter cable
2. Add AU to Part Number for Gold Contacts.
* B indicates black housing

## STRAIGHT MALE CORD PLUG

| Part Number | Insert Pins | Part Number | Insert Pins |
|---|---|---|---|
| TA3M | 3 | TA5M | 5 |
| TA3MB* | 3 | TA5ML | 5 |
| TA3ML | 3 | TA5MLB* | 5 |
| TA4M | 4 | TA6ML[1] | 6 |
| TA4MB* | 4 | TA7ML | 7 |
| TA4ML[1] | 4 | TA8ML | 7 |

1. Add AU to Part Number for Gold Contacts.
* B indicates black housing

◊ Available on special order only; contact Switchcraft for price and delivery.

DIMENSIONS ARE FOR REFERENCE ONLY Inch (mm)


® Registered trademark of Switchcraft, Inc.
Note: Contact your Switchcraft Representative for price and delivery

* Please visit the product pages on our website for the most up-to-date product information

# TINI Q-G® MINIATURE CONNECTORS (continued)

## TB(*)M AND TB(*)MB RECEPTACLE

Male receptacle for chassis/panel mounting. Specially designed flange permits close (front) mount on crowded panels. Mounting hardware supplied. Available with PC terminals. Call factory for details.

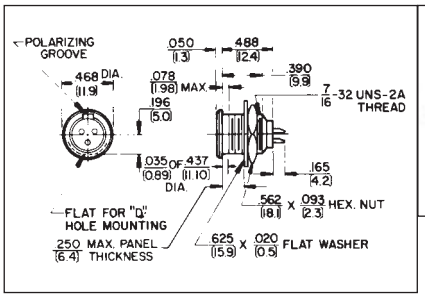


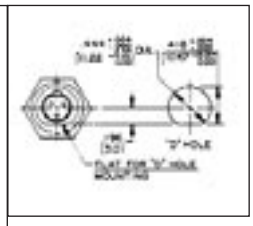

| Part Number | Insert Pins | Part Number | Insert Pins |
|---|---|---|---|
| TB3M | 3 | TB5MB* | 5 |
| TB3MB* | 3 | TB6M | 6 |
| TB4M | 4 | TB7M | 7 |
| TB4MB* | 4 | TB8M | 8 |
| TB5M | 5 | | |

* B indicates black housing

## TLP(*) LOOPING PLUG

Looping plug is designed for circuit testing. Other inserts and wiring patterns are possible; contact Switchcraft.

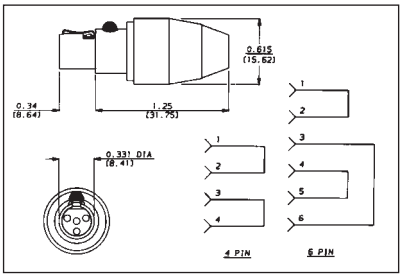


### STRAIGHT FEMALE LOOPING PLUG

| Part Number | Insert Contacts |
|---|---|
| ◊TLP4 | 4 |
| ◊TLP6 | 6 |

◊ Available on special order only; contact Switchcraft for price and delivery.
* Number of insert contacts or pins must be specified to complete Part Number.

TRG4M

## REVERSE GENDER TQG SERIES

Same specifications as the original TQG Series, however, the latch is on the male cord mount. Available in 4 pin only.

TRGS4F

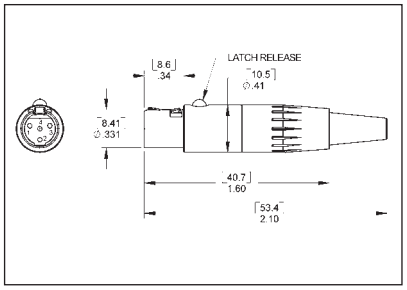


| Part Number | Insert Pins | Description |
|---|---|---|
| TRGS4F | 4 | Panel mount female |
| TRG4M | 4 | Cord mount male w/latch |

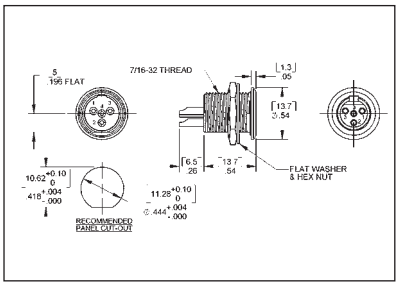


DIMENSIONS ARE FOR REFERENCE ONLY Inch (mm)

* Please visit the product pages on our website for the most up-to-date product information

# TINI Q-G® MINIATURE CONNECTORS (continued)

## TRA(*)M PC MOUNT MALE RECEPTACLE

The TRA(*)M low profile male receptacles mount in minimum space from the rear of panel or chassis, and feature space-saving right-angle construction and PC type terminals. The TRA3M is a cost-effective choice for audio equipment, medical instrumentation, computer equipment and test/measurement applications. Also available with 6 pins.

TRA3M

TRA6M

| Part Number | Insert Pins |
|---|---|
| TRA3M | 3 |
| TRA6M | 6 |
| TRA6MF* | 6 |

*F designates ferrite shielding.

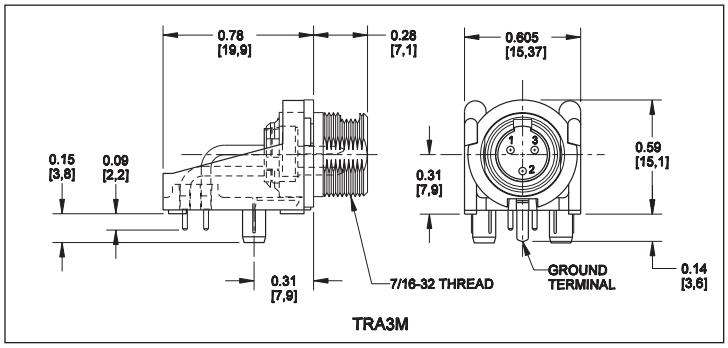


TRA3M

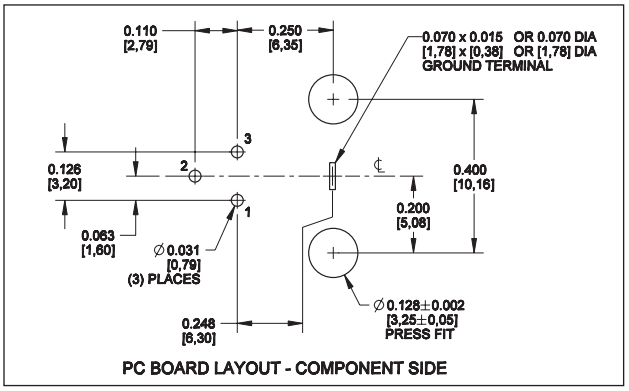


PC BOARD LAYOUT - COMPONENT SIDE

## TRASM*M, TRAPC*M SERIES

Switchcraft introduces an expansion of its popular TQG Series of connectors. The TRASM*M and TRAPC*M offers low profile, right angle PC board mount connectors. The TRASM*M versions are true surface mount connectors, while the TRAPC*M versions are through-hole PC mount connectors. Both versions are available in 3-8 pins. All plastic connectors, the TRASM*M and TRAPC*M series have flats on the top of the connectors to facilitate pick and place assembly. As an added option, a non-threaded bushing version is also available.

TRASM3M

TRAPC3MS

### FEATURES AND BENEFITS

- Low profile, compact design reduces PC board space
- Mates with TQG female cord plugs
- Rated at 5A for 3-6 pins, 3A for 7 and 8 pin versions

### MARKETS

- Wireless microphone systems
- Medical Instrumentation
- Test Instrumentation

### SPECIFICATIONS

### MATERIALS

**Housing:** Thermoplastic
**Contacts:** Brass, tin-plated
**Nut and Washer:** Brass, nickel-plated

### ELECTRICAL

**Current Rating:** 5A for 3-5 pins, 1.5A for 6-8
**Contact Resistance:** 10 m Ohm max
**Insulation Resistance:** 100 m Ohm min
**Dielectric Withstanding Voltage:** 250VAC
**Mechanical Life:** 2,000 cycles

### TINI Q-G® CONNECTORS ORDERING INFORMATION

T RA ___ ___ M ___ ___ ___ ___

**Tini QG** — T
**Right Angle** — RA
**Termination**
PC - Thru Hole
SM - Surface Mount
**Contacts Configuration**
3 - 8
**Contact Gender**
M - Male
**Reel Size**
15" reel, standard tape and reel size
**Optional Packaging**
TR - Tape and Reel (std packaging - bulk)
**Optional Modifier**
1 - no thread
**Optional Modifier**
S - small Profile (available in configurations 3&4 only)

*See next pages for drawings*

DIMENSIONS ARE FOR REFERENCE ONLY Inch (mm)


® Registered trademark of Switchcraft, Inc.
Note: Contact your Switchcraft Representative for price and delivery

* Please visit the product pages on our website for the most up-to-date product information

# TINI Q-G ® MINIATURE CONNECTORS (continued)

**TRASM*M, TRAPC*M SERIES**

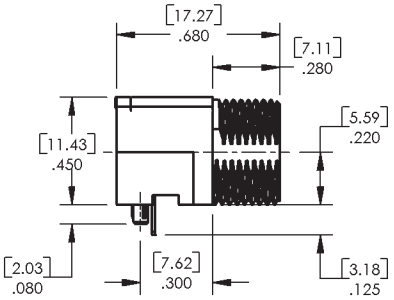


SMALL PROFILE
THRU HOLE TERMINATION

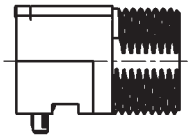

SMALL PROFILE
SURFACE MOUNT TERMINATION

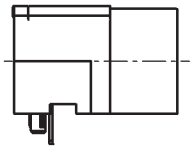

SMALL PROFILE
NO THREAD OPTION
(THRU HOLE SHOWN)

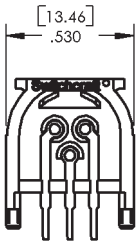


REAR VIEW
(CONFIG. 3 THRU HOLE SHOWN)

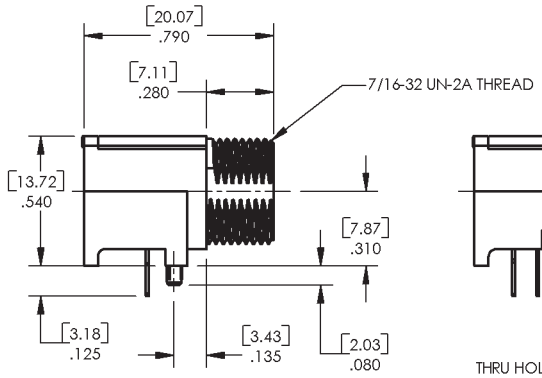


THRU HOLE TERMINATION
SINGLE ROW
(CONFIG. 3 & 4)

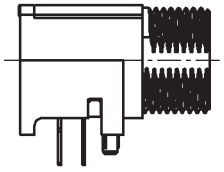

THRU HOLE TERMINATION
DOUBLE ROW
(CONFIG. 5, 6, 7, & 8)

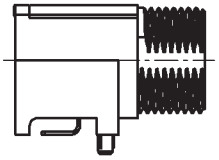

SURFACE MOUNT TERMINATION
SINGLE ROW
(CONFIG. 3 & 4)

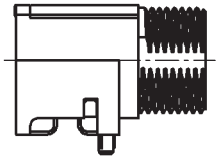

SURFACE MOUNT TERMINATION
DOUBLE ROW
(CONFIG. 5, 6, 7, & 8)

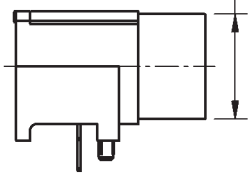


NO THREAD OPTION
(SINGLE ROW THRU HOLE SHOWN)

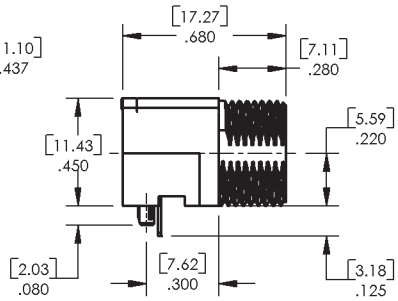


SMALL PROFILE
THRU HOLE TERMINATION

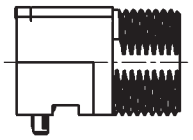

SMALL PROFILE
SURFACE MOUNT TERMINATION

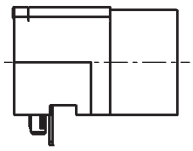

SMALL PROFILE
NO THREAD OPTION
(THRU HOLE SHOWN)

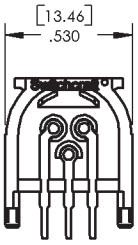


REAR VIEW
(CONFIG. 3 THRU HOLE SHOWN)

DIMENSIONS ARE FOR REFERENCE ONLY $\frac{\text{Inch}}{\text{(mm)}}$

* Please visit the product pages on our website for the most up-to-date product information

# TINI Q-G ® MINIATURE CONNECTORS (continued)

**TRASM*M, TRAPC*M SERIES**

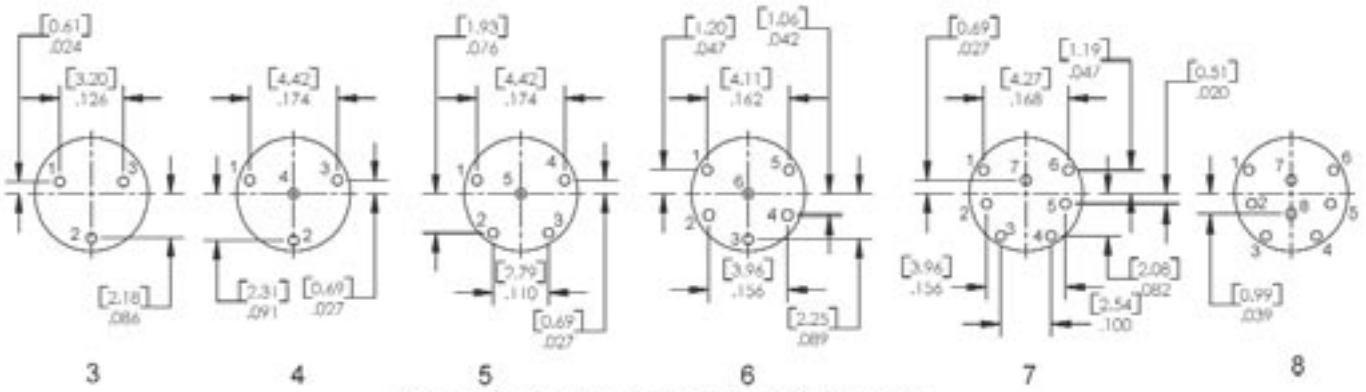


CONTACT CONFIGURATIONS (FRONT VIEW)

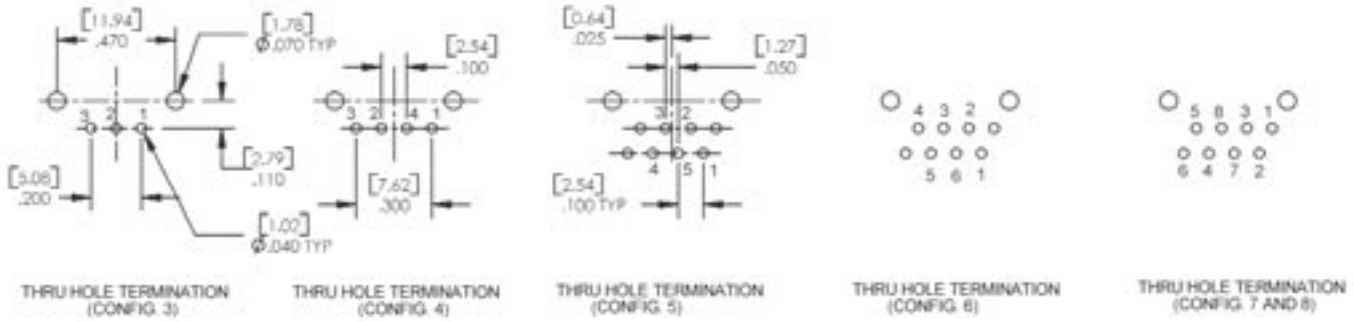


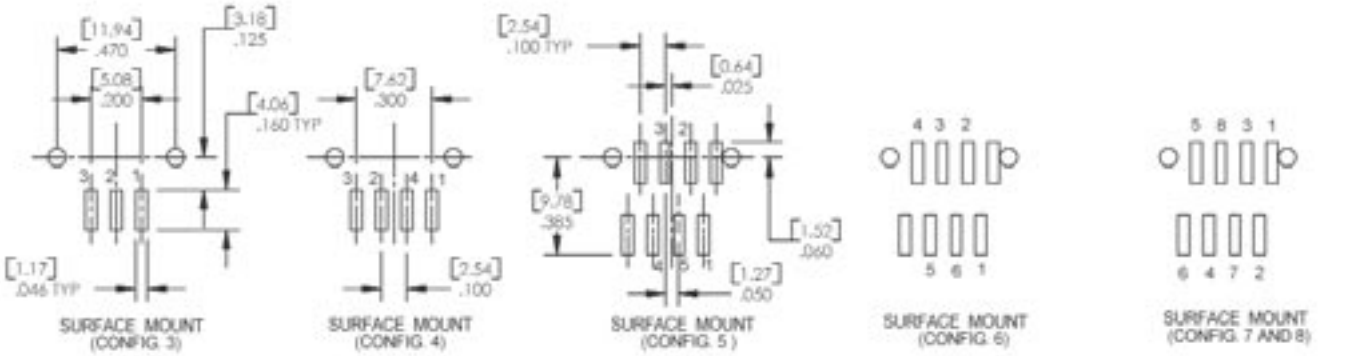


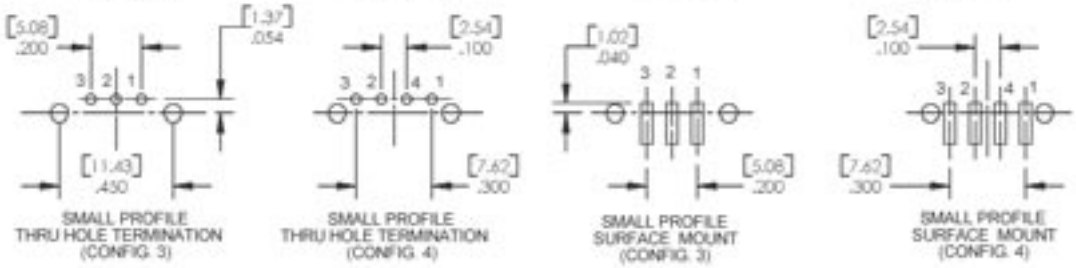


RECOMMENDED PC BOARD LAYOUTS

DIMENSIONS ARE FOR REFERENCE ONLY Inch / (mm)



® Registered trademark of Switchcraft, Inc.
Note: Contact your Switchcraft Representative for price and delivery

* Please visit the product pages on our website for the most up-to-date product information

# TINI Q-G ® MINIATURE CONNECTORS (continued) ®

## TY(*)F AND TY(*)FPC RECEPTACLES

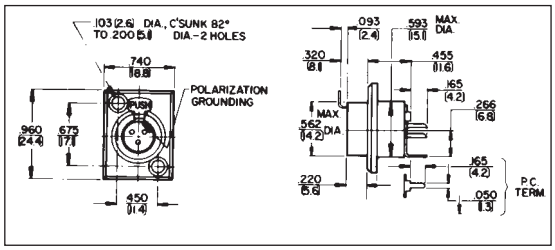


Female receptacle mounts in minimum space from front or rear panel or chassis. Terminals are solder lugs, Series TY(*)F, or P.C., Series TY(*)FPC. All receptacles have separate ground lug.

| Part Number | Insert Contacts | Part Number | Insert Contacts |
|---|---|---|---|
| TY3F | 3 | TY5F | 5 |
| TY3FPC | 3 | TY5FPC | 5 |
| TY4F | 4 | | |
| TY4FPC | 4 | | |

## MOUNTING HOLE DETAIL SERIES TY(*)F, TY(*)FPC

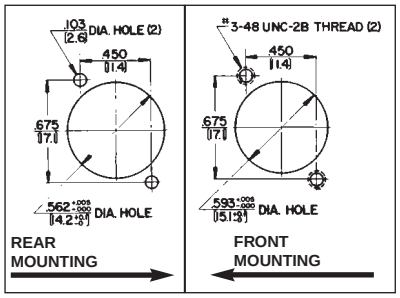


## COMBINED P.C./PANEL MOUNTING

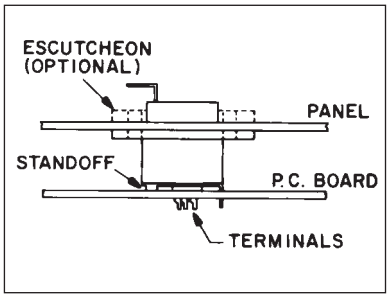


## RECOMMENDED P.C. BOARD LAYOUT

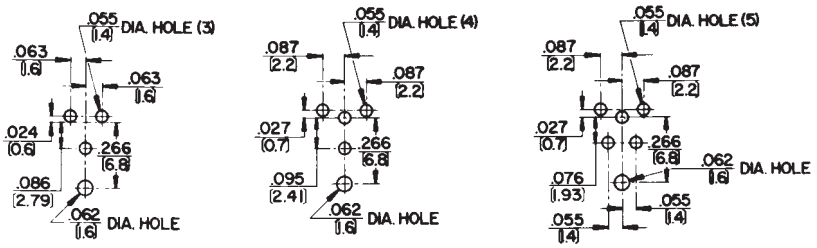


## TYEF ESCUTCHEONS

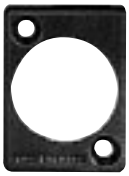

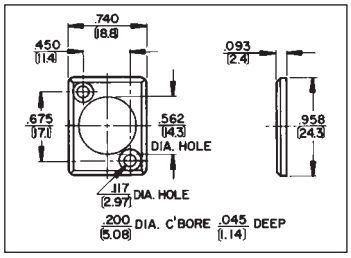


Trim escutcheons in seven colors for use with Series TY(*)F and TY(*)FPC receptacles, are recommended for rear mount receptacles. Escutcheons must be ordered separately.

| Part Number | Color |
|---|---|
| ◊TYEF01 | Red |
| TYEF02 | Black |
| ◊TYEF03 | Green |
| ◊TYEF04 | Blue |
| ◊TYEF05 | White |
| ◊TYEF08 | Yellow |
| ◊TYEF11 | Gray |

## TQG(*)F AND TQG(*)M CONNECTOR INSERTS

Male and female inserts with 3, 4, 5 or 6 pins/ contacts. For replacement (cord plugs only) or build-into equipment, such as microphones, transducers and instruments.

### Male Inserts

| Part Number | Insert Pins |
|---|---|
| TQG3M | 3 |
| TQG4M | 4 |
| TQG5M | 5 |
| ◊TQG6M | 6 |

### Female Inserts

| Part Number | Insert Contacts |
|---|---|
| TQG3F | 3 |
| TQG4F | 4 |
| TQG5F | 5 |
| ◊TQG6F | 6 |

## TBA(**) AUDIO ADAPTER

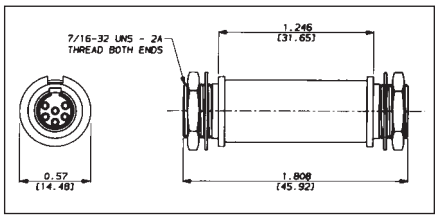


3–6 pin male-to-male adapter is designed for through-bulkhead or cable expansion usage. Adapter is prewired pin 1 to pin 1, pin 2 to pin 2, etc. Mounting nuts are supplied for each threaded end. Panel hole diameter required is .45"; maximum panel thickness is .25" (6.35 mm).

| Part Number | Insert Pins |
|---|---|
| ◊TBA03 | 3 |
| ◊TBA04 | 4 |
| ◊TBA05 | 5 |
| ◊TBA06 | 6 |

◊ Available on special order only; contact Switchcraft for price and delivery.

DIMENSIONS ARE FOR REFERENCE ONLY Inch (mm)

* Please visit the product pages on our website for the most up-to-date product information

# HPC SERIES PANEL MOUNTS AND CORD PLUGS

HPCPR41F

HPCP41F

HPCP410RA

HPCI4F

HPCC4F

HPCC4RAF

## HPC SERIES

Switchcraft recently introduced a complete line of panel mount speaker connectors that are completely compatible with the Neutrik® Speakon® 4 pole series. We are now introducing a complete line of cable mounts as well. The complete HPC Series offers both panel mount and cord mount connectors.

The HPC panel mounts have been updated with new silver-plated contact materials that boost the contact ratings to 30A per UL 1977 on PC mount versions, 50A per UL 1977 on Faston® versions. They are still available with either 0.100" depth flanges or 0.200" depth flanges. The 0.200" depth flange allows for rear mounting of the HPC Series, and proper mating of all cord plugs. The panel mount versions are available with either 0.187" or 0.250" Faston® terminals, and either straight or right angle PC mount terminals. The right angle PC mount version also has, as an option, a mounting post which allows the connector to snap onto the PC board for wave soldering.

The HPC cord plugs are available in either straight, right angle, or as an in-line. The in-line version mates with either the straight or right angle cord plug, allowing the end user to extend cable runs. All cord plugs are compatible with Speakon® panel mounts. The in-line mates with our HPC cord plugs, as well as Speakon® cord plugs. The unique feature of the HPC series cord plugs are the "push to lock" feature, similar to the connection of an XLR connector. The HPC cord plugs, when mated to either HPC panel mounts or Speakon® panel mounts do not require a 1/4" turn to engage. Simply push the connector in until it locks. To disengage, push forward on the latch lever and pull the connector out. This feature eliminates the need to remember to turn the connector to make contact. All HPC cord plugs utilize 0.250" Faston® terminals, which allow for easy assembly, and make it easy to change cord plugs. To change from a straight cord plug to an in-line cord plug, back off the strain relief nut, twist off the handle, disconnect the Faston® terminals, fasten the new cord connector, twist on the handle and the strain relief. Barbs on the handle keep the handle from vibrating loose from the front shell.

Both HPC panel mounts and cord plugs incorporate a built-in gasket, which allows them to meet IP 25 harsh environment ratings, as well as IEC 529 and IEC 1010-1 safety ratings.

## FEATURES AND BENEFITS

- Completely compatible with Neutrik® Speakon® 4 pole connectors
- 30A rating per UL 1977 on PC mount versions
- 50A rating per UL 1977 on Faston® versions
- Panel mounts have two different Faston® terminal sizes, 0.187" and 0.250"
- Panel mounts offered with two different flange depths, 0.100" and 0.200"
- 0.200" depth flange offers easy rear mounting
- Right angle or straight PC board terminals on panel mounts
- Built in gasket gives all HPC connectors IP 25 environmental ratings
- All HPC Series meet IEC 529 and IEC 1010-1 safety ratings
- Cord plug versions offer "push to lock" design, no 1/4" turn to engage
- Cord plug versions accept 10 AWG wire, 0.560" cable OD max

## APPLICATIONS

- Loudspeakers
- Power audio amplifiers

## SPECIFICATIONS

**Materials**

Housings: Thermoplastic UL 94V-O rated
Seal Rings: Thermoplastic rubber
Contacts: Silver-plated over copper alloy

## ELECTRICAL

**PC Terminals Current Rating:** 30A per UL 1977
**Faston® Terminals Current Rating:** 50A RMS w/10AWG wire, normal ambient, per UL 1977
**Voltage Rating:** 1,500 AC RMS, Per Mil-Std 202 Method 301
**Insulation Resistance:** > 2T Ohms
**Contact Resistance:** 1m Ohm, 1.5mOhm after 1,000 insertion/withdrawals

## MECHANICAL

**Shock:** Mil-Std 202, Method 213B Cond.K
**Vibration:** Mil-Std 202, Method 201A
**Life:** 1,000 insertion/withdrawals
**Cable Range:** 0.560" OD max

## ENVIRONMENTAL

**Salt Spray:** Mil-Std 202, Method 101D Cond. B
**Thermal Shock:** Mil-Std 202, Method 107G
**Temperature Limits:** -55 C to +85 C
**Moisture Resistance:** Mil-Std 202, Method 106E
**Life@Ambient Temperature:** Mil-Std 202, Method 108A
**Touch Proof:** IEC 65 and 1010-1
**Weather Tightness:** IEC 529, IP 25

## CORD MOUNT ORDERING INFORMATION

| Part Number | Description |
|---|---|
| HPCC4F | Straight Cord Plug |
| HPCI4F | Inline Cord Plug |
| HPCC4RAF | Right Angle Cord Plug |

DIMENSIONS ARE FOR REFERENCE ONLY Inch (mm)


® Registered trademark of Switchcraft, Inc.
Note: Contact your Switchcraft Representative for price and delivery

* Please visit the product pages on our website for the most up-to-date product information

## PANEL MOUNT ORDERING INFORMATION

HPC P ___ 4 ___ ___ ___

**Series**
High Power Connector

**Type of Connector**
P - Panel

**Type of Housing**
Blank - rectangle
R - round

**Number of Contacts**
4

**Termination**
F - .250" Faston® ; F1 - .187" Faston®; PC - Printed Circuit
RA - Right angle PC; RAP - Right angle PC with mounting post

**Mounting Holes**
Blank - Rectangle: .140" dia. w/Countersink Hole
Blank - Round: .152" dia. w/Countersink Hole
0 - Rec./ Round: .093" Dia. Hole

**Recessed Flange (Dim. "A")**
1 - .100"; 2 - .200"

FOR ALL TERMINAL CONFIGURATIONS SHOWN, ROUND HOUSING COUNTERPARTS EXIST

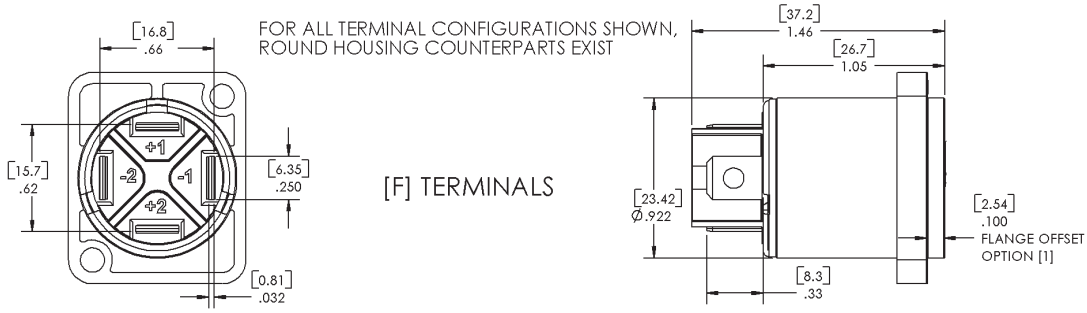


[F] TERMINALS

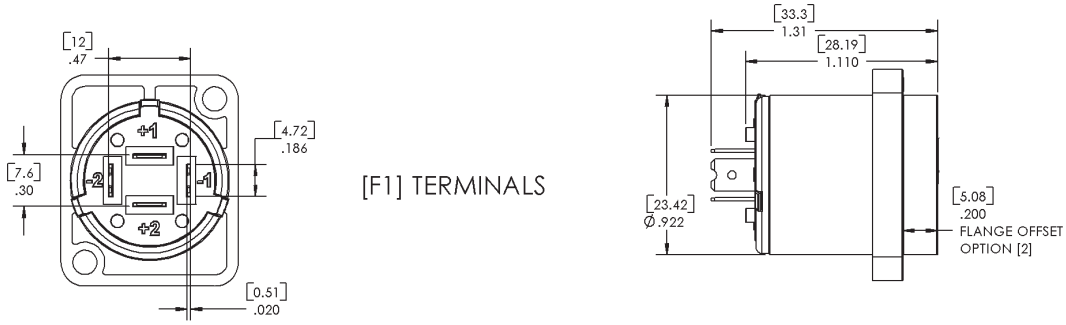


[F1] TERMINALS

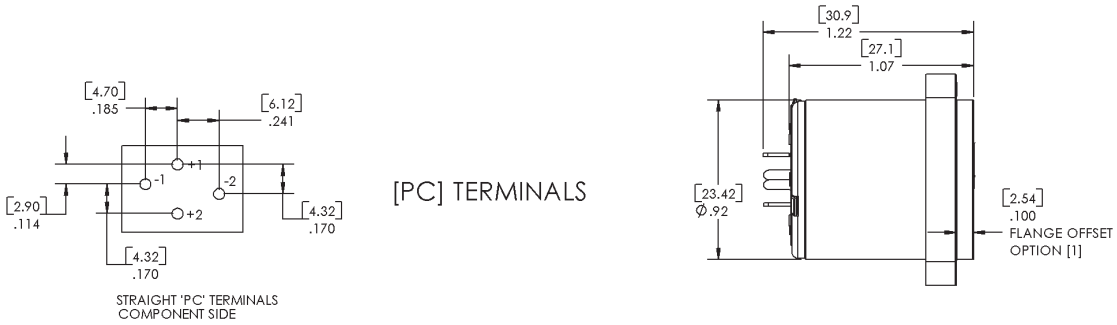


[PC] TERMINALS

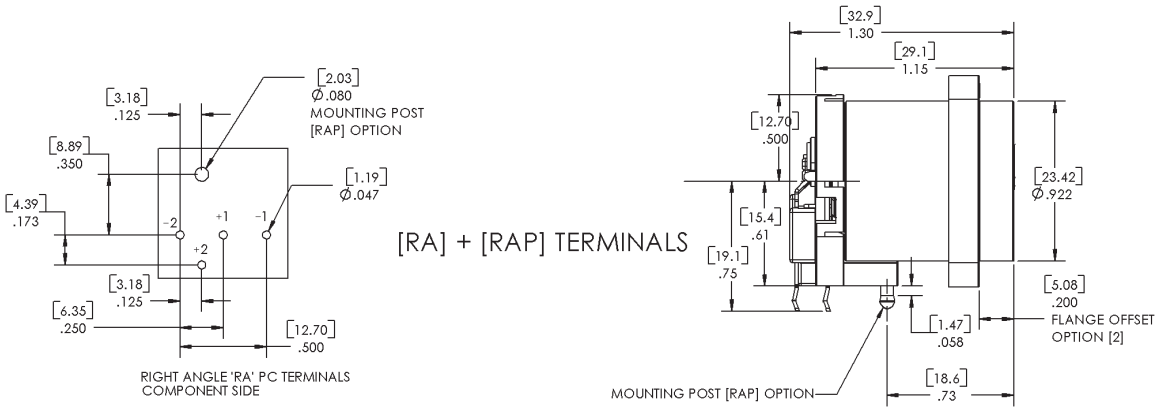


[RA] + [RAP] TERMINALS

DIMENSIONS ARE FOR REFERENCE ONLY Inch (mm)

* Please visit the product pages on our website for the most up-to-date product information



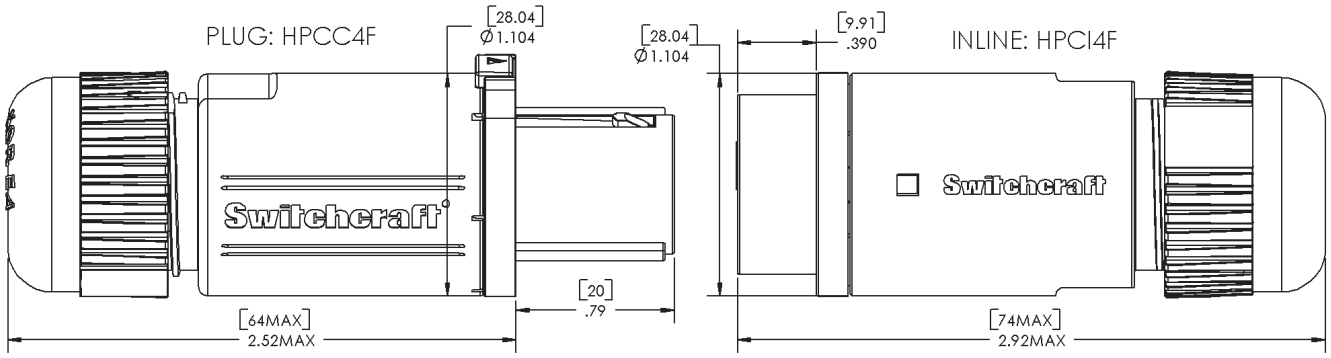


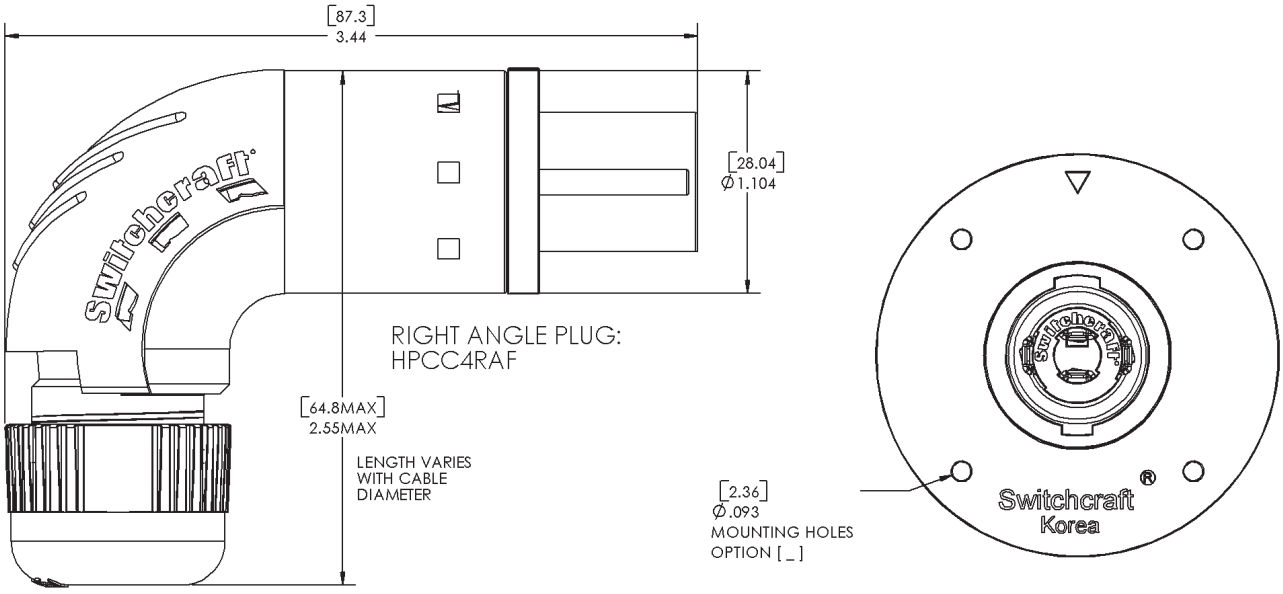


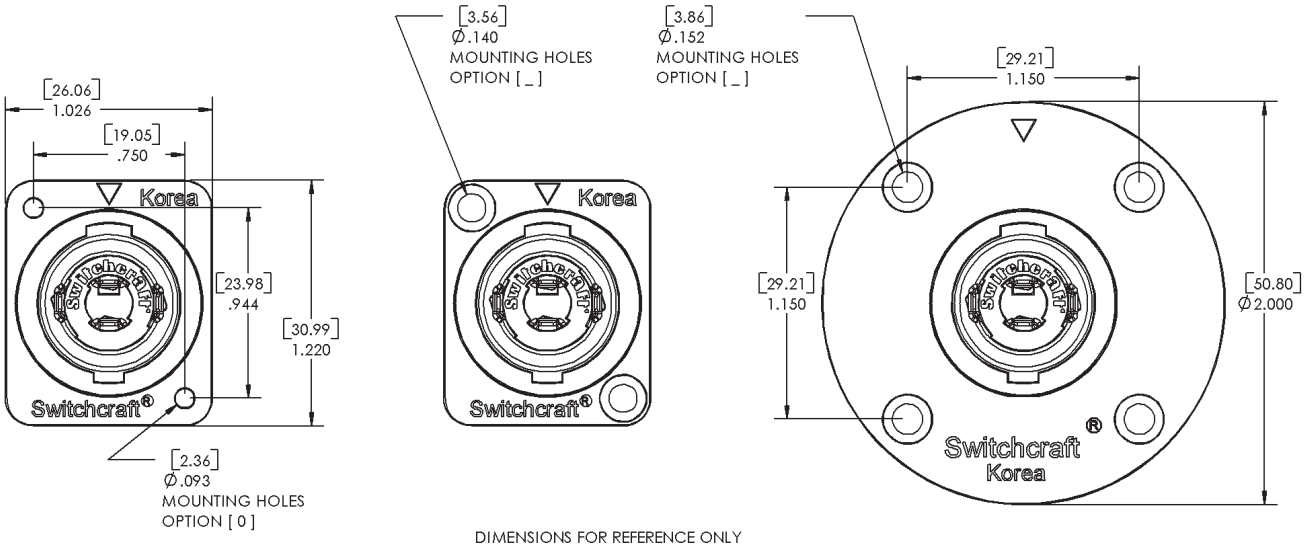


DIMENSIONS FOR REFERENCE ONLY

DIMENSIONS ARE FOR REFERENCE ONLY Inch (mm)



® Registered trademark of Switchcraft, Inc.
Note: Contact your Switchcraft Representative for price and delivery

* Please visit the product pages on our website for the most up-to-date product information

# EN3™ MINI WEATHERTIGHT CONNECTOR SERIES

## GENERAL FEATURES AND BENEFITS

- Great all-purpose connector "weather" or not sealing feature is required.
- Superior leakage protection. Contact area is double-sealed for excellent moisture and chemical resistance when mated to Switchcraft's connectors.
- Integral O-ring and gasket. O-ring is molded onto cord housing assembly and gasket is molded onto panel housing assembly to prevent leakage and eliminate need for additional O-rings and gaskets.
- Reduced part count for reduced labor to assemble.
- No Grommets. Cable clamp assembly features living hinges, which snap easily onto and support the cable.
- Thermoplastic rubber body simulates closed entry contact system to prevent probe damage or accidental loss of spring retention due to misaligned or bent pins.
- Abrasion-resistant thermoplastic boot provides strain relief and accepts cable diameter .195" to .265".
- Housing rated UL 94V-O against flammability.
- Panel connector shell features a positioning keyway to prevent misalignments and a polarizing single "D" design for proper panel mounting and to prevent rotational movement.
- 2-18 pins.
- Exceeds Coast Guard specifications for water tightness (CFR 46 Part 110.20).
- Optional cap covers panel housing assembly when not in use.
- Exceeds enclosure rating IP16/IP18 when not mated or covered and IP66/IP68 when mated or covered (IEC 529).
- Exceeds enclosure rating 6P at 1000V when mated or covered (NEMA 250).

## MATING INSTRUCTIONS FOR A CORD CONNECTOR TO A PANEL MOUNT OR IN-LINE CONNECTOR

First, align the notched keyway on both the panel mount or in-line and cord connector. Then, push the cord connector onto the mating connector. Grasp the coupling ring between the slots, push it toward the panel mount connector and rotate it clockwise nearly one half a turn. Continue rotating until you feel the coupling ring ride over the locking "bump". This is the locked position. The cord connector is not securely in place unless this procedure is followed.

## APPLICATIONS

| | |
|---|---|
| Process Control | Communications |
| Marine Electronics | Transportation |
| Medical Instrumentation | General Industrial Electronics |
| Geothermal Instrumentation | Harsh Environments |

## MATERIALS

**Cord and panel connector shells, contact locking disk, and cable clamp assembly:** Thermoplastic polymer glass fiber, flame retardant
**Coupling ring:** Nylon
**Rear boot and connector shell interior:** Thermoplastic rubber
**Contacts:** Copper base alloy gold-plated over nickel underplate

## SPECIFICATIONS

### MECHANICAL

**Shock:** Mil-Std 202 Method 213B, condition K
**Vibration:** Mil-Std 202 Method 201
**Life:** 600 insertion/withdrawal cycles (minimum)

### ELECTRICAL

**Voltage Rating (sea level):** Tested at 600 VRMS
**Insulation Resistance:** 100 megohms (minimum) at 77° F
**Contact Resistance:** 5 milliohms (maximum)
**Current Rating:** 3.0 Amps (#26 contact)– 9 through 18pin
6.5 Amps (#20 contact)– 7 and 8 pin
7.5 Amps (#20 contact)– 2 through 6 pin
13.0 Amps (#16 contact)– 2 and 3 pin

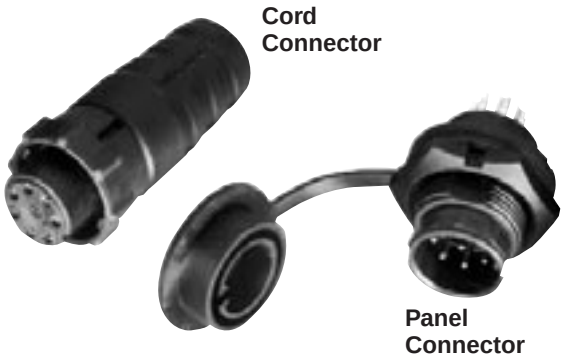


## ENVIRONMENTAL

**Temperature Limits:** -40°C to +65°C (non-operating)
**Moisture Resistance:** Mil-Std 202 Method 106F
**Insulation Resistance:** Mil-Std 202 Method 302 condition B
**Thermal Shock:** Mil-Std 202 Method 107G
**Salt Spray:** Mil-Std 202 Method 101D condition B

## RATINGS

| | |
|---|---|
| IP16/IP18 | CFR 46 Part 110.20 |
| IP66/IP68 | UL 94V-O |
| NEMA 250 (6P) | |

Patent 5,485,673 File 36049

**EN3™ Weathertight Connector Current Carry Capability (per UL 498 Standard)**

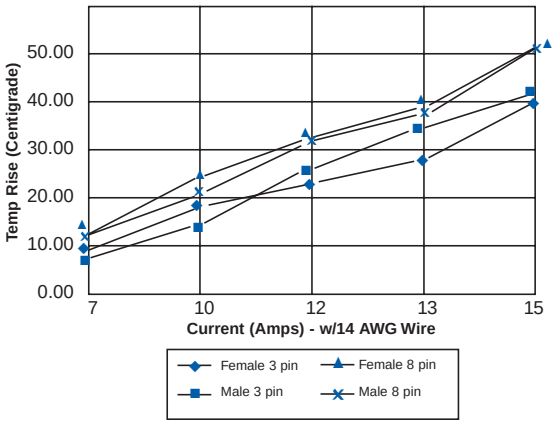


**Dielectric Withstanding Voltage**

| Contact size/ number of contacts | Voltage |
|---|---|
| #20-2 | 3000 |
| #20-4 | |
| #20-3 | |
| #16-2 | |
| | 2000 |
| #20-7, #20-8 | |
| #16-3 | |
| #20-5, #20-6 | 1000 |

DIMENSIONS ARE FOR REFERENCE ONLY Inch (mm)

* Please visit the product pages on our website for the most up-to-date product information

## CRIMP CONTACT INSERTION INSTRUCTIONS

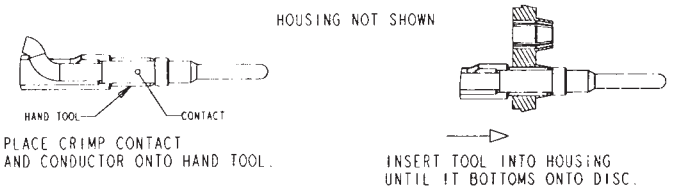


**CRIMP TOOLS**

| Part Number | Tool Description |
|---|---|
| EN3INS16 | Insertion/Extraction Tool for 16 AWG |
| EN3INS20 | Insertion/Extraction Tool for 20 AWG |
| EN3CR | Crimp Hand Tool |
| EN3CRAUTO | Pneumatic Crimp Tool |
| EN3POS16 | Positioner for 16 AWG contacts and pins |
| EN3POS20 | Positioner for 20 AWG contacts and pins |

**NOTE:** A positioner must be used with the EN3CR and EN3CRAUTO.

## CRIMP CONTACT EXTRACTION INSTRUCTIONS

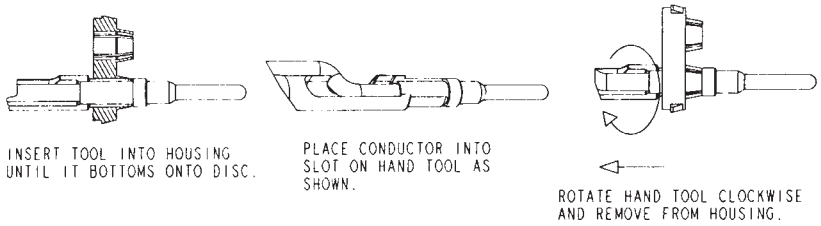


**Note: Solder and PC contacts are factory assembled**

## CORD CONNECTOR ASSEMBLY INSTRUCTIONS

**STEP 1**

**Cord Connector:** To assemble the three-part cord connector, first feed the end of the cable through the boot, cable clamp housing, and coupling ring in that order and position as shown in the figure below. NOTE: The coupling ring can also be inserted onto the cord connector from the front. **In-line Connector:** Feed the end of the cable through the boot and cable clamp housing in the order and position shown.

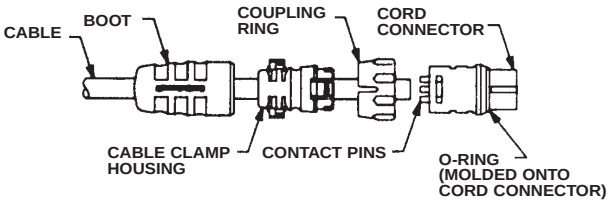


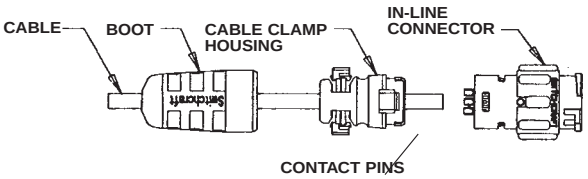


**STEP 2**

Next, strip the cable .218" as shown and begin soldering conductors to pins, or insert contacts crimped on wire starting with contact #1 next to the "notch" and following with the remaining conductors counter-clockwise with #6 or #8 conductor in the center.

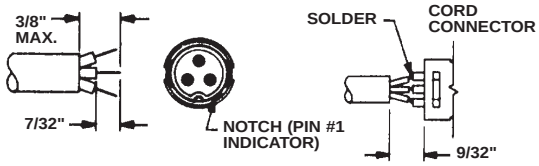


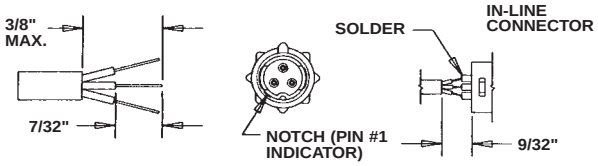


**STEP 3**

Push the cable clamp housing forward until it locks into the connector body and snap the two clamps into their compartments.

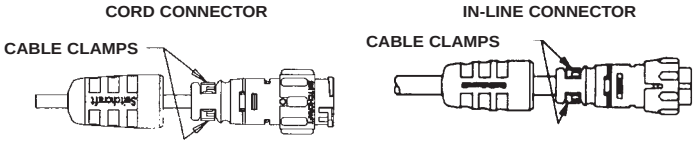


**STEP 4**

Finally, push the boot all the way forward to seat tightly onto the cable clamp housing.

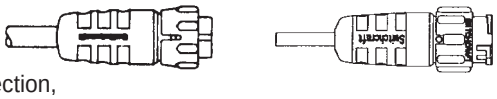


**Remember:** Cord connectors will not mate with each other. For cord-to-cord connection, your customer must order a cord connector plus an in-line connector.

DIMENSIONS ARE FOR REFERENCE ONLY Inch (mm)


® Registered trademark of Switchcraft, Inc.
Note: Contact your Switchcraft Representative for price and delivery

* Please visit the product pages on our website for the most up-to-date product information

# EN3™ MINI WEATHERTIGHT CONNECTOR SERIES (continued)

## 2 – 8 PIN CORD CONNECTOR

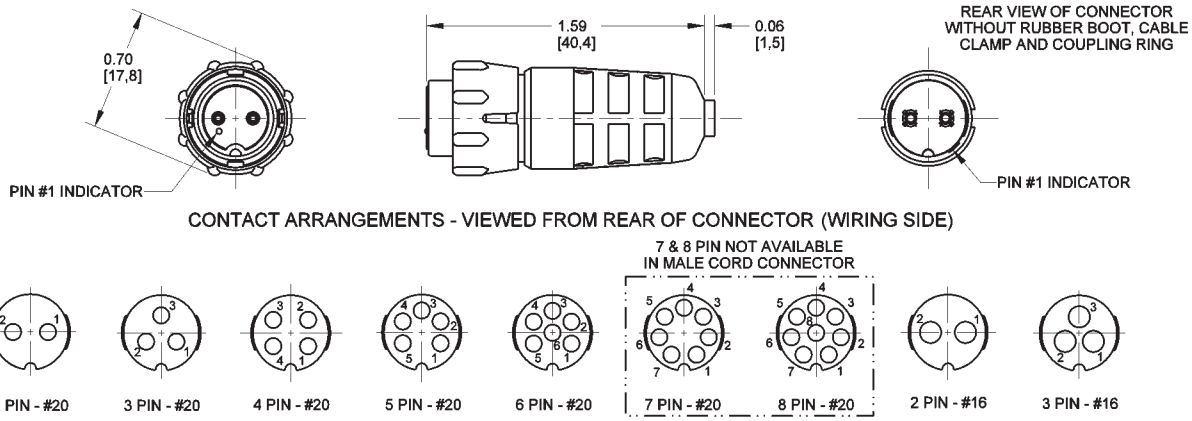


## 9 – 18 PIN CORD CONNECTOR

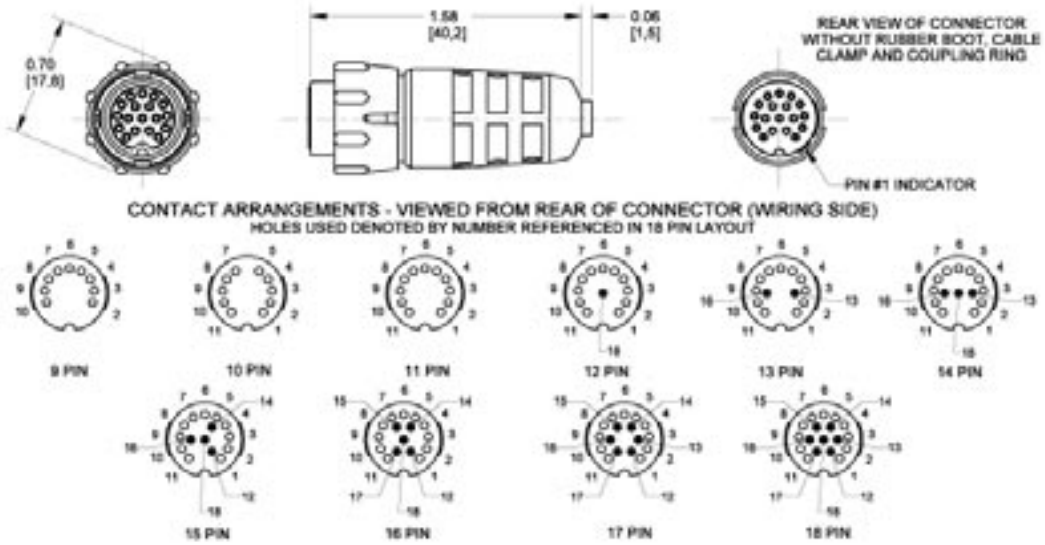


### EN3 Cord Connector Part Number Scheme

| Series | Style | Pins/ Contacts | Gender | Contact Size | Contact Style | Contact Plating | Packaging |
|---|---|---|---|---|---|---|---|
| EN3 | C | 2-18 | F: Female<br>M: Male | 16: #16<br>Leave blank for #20<br>26: for 9-18 only | C: Crimp<br>P: PC<br>S: Staggered<br>Leave blank for solder | AG: Silver<br>Leave blank for gold | K: Kit<br>Leave blank for bulk packaging |

Notes: 7 & 8 pin not available in cord male
9-18 pin available in either staggered solder or straight solder only
9-18 pin available only with # 26 terminals
AG: Silver plating special order
#16 contact available in 2 & 3 pins only

DIMENSIONS ARE FOR REFERENCE ONLY Inch (mm)

* Please visit the product pages on our website for the most up-to-date product information

# EN3™ MINI WEATHERTIGHT CONNECTOR SERIES (continued)

## 2 – 8 PIN PANEL CONNECTOR

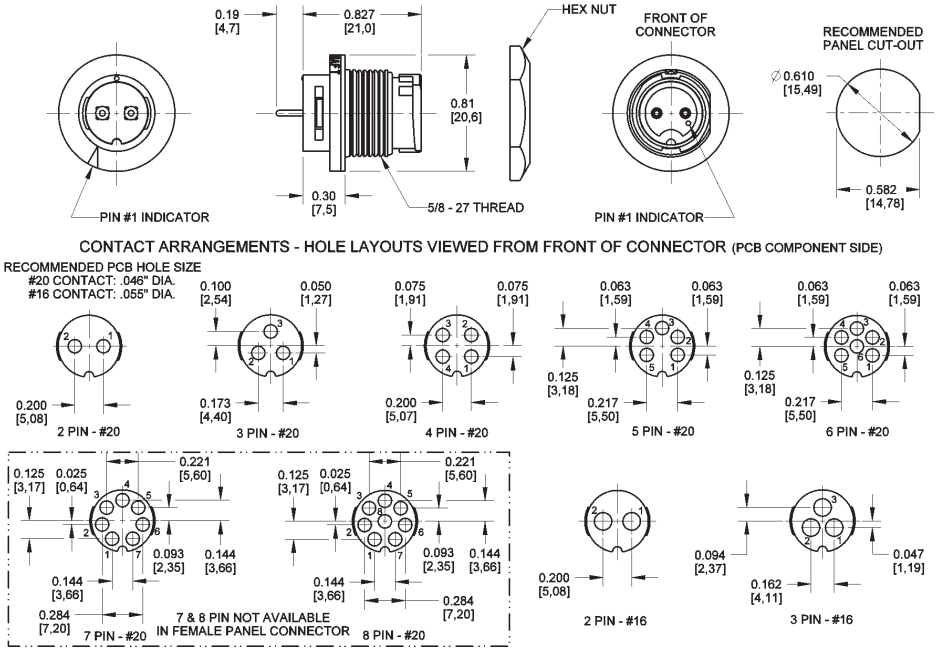


## 9 – 18 PIN PANEL CONNECTOR

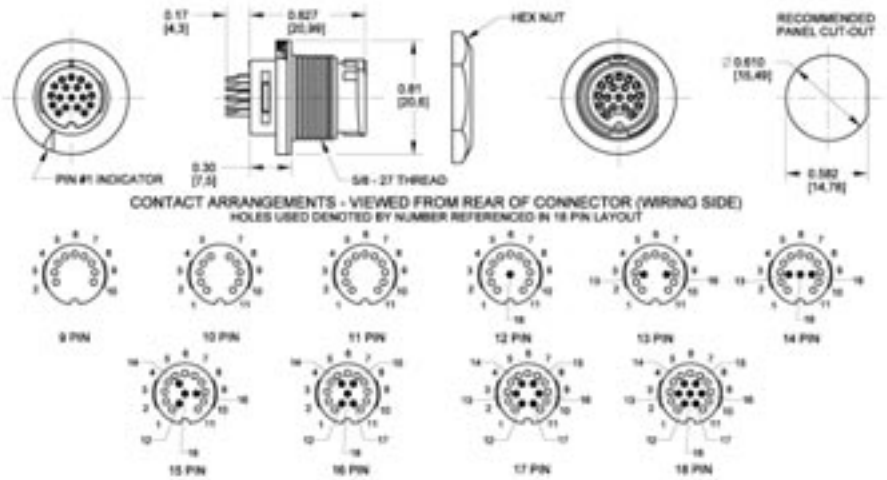


### EN3 Panel Connector Part Number Scheme

| Series | Style | Pins/ Contacts | Gender | Contact Size | Contact Style | Contact Plating | Packaging |
|---|---|---|---|---|---|---|---|
| EN3 | P | 2-18 | F: Female<br>M: Male | 16: #16<br>Leave blank for #20<br>26: for 9-18 only | C: Crimp<br>P: PC<br>S: Staggered<br>Leave blank for solder | AG: Silver<br>Leave blank for gold | K: Kit<br>Leave blank for bulk packaging |

Notes: 7 & 8 pin not available in panel female
9-18 pin available in either staggered solder or straight solder only
9-18 pin available only with # 26 terminals
AG: Silver plating special order
#16 contact available in 2 & 3 pins only

DIMENSIONS ARE FOR REFERENCE ONLY Inch (mm)


® Registered trademark of Switchcraft, Inc.
Note: Contact your Switchcraft Representative for price and delivery

* Please visit the product pages on our website for the most up-to-date product information

# EN3™ MINI WEATHERTIGHT CONNECTOR SERIES (continued)

## 2 – 8 PIN INLINE CONNECTOR

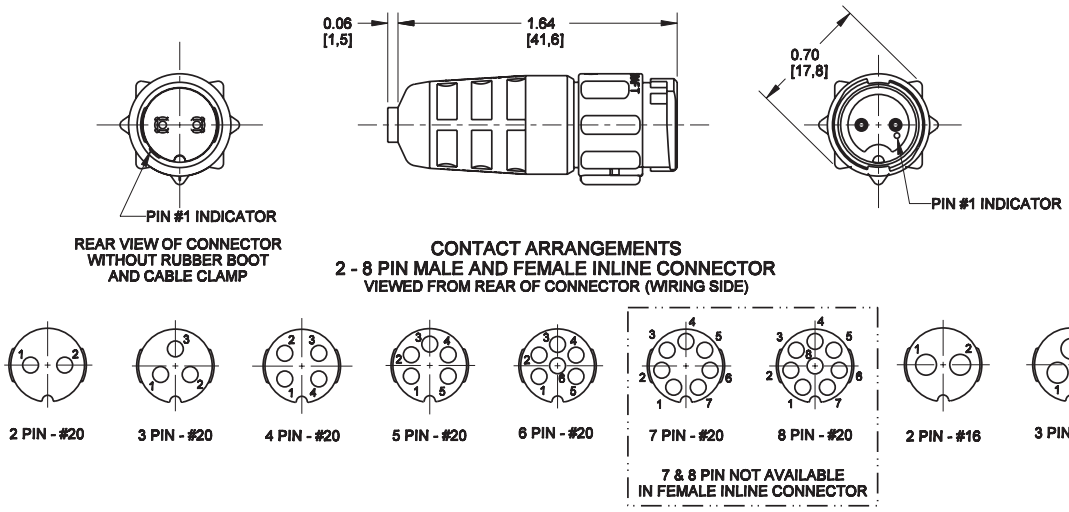


### EN3 Inline Connector Part Number Scheme

| Series | Style | Pins/ Contacts | Gender | Contact Size | Contact Style | Contact Plating | Packaging |
|---|---|---|---|---|---|---|---|
| EN3 | I | 2-8 | F: Female<br>M: Male | 16: #16<br>Leave blank for #20 | C: Crimp<br>P: PC<br>Leave blank for solder | AG: Silver<br>Leave blank for gold | K: Kit<br>Leave blank for bulk packaging |

Notes: 7 & 8 pin not available in inline female
#16 contact available in 2 & 3 pins only
AG: Silver plating special order

## 2 – 8 PIN OVERMOLDED CORD AND INLINE CONNECTOR

(See Cable Section for More Details.)

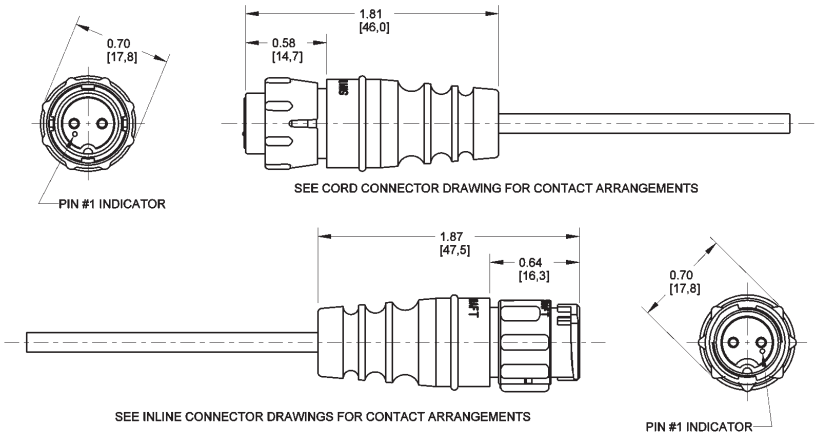


DIMENSIONS ARE FOR REFERENCE ONLY Inch (mm)

* Please visit the product pages on our website for the most up-to-date product information



# DIN CONNECTORS

## SPECIFICATIONS
### ELECTRICAL

**Contact Resistance:** Cord Plugs and Receptacles; .010 ohms, contact spring/pin .030 ohms, ground clip/shell. Control and Switching Receptacles; .015 ohms, contact spring/pin; .020 ohms, switch contacts.
**Dielectric Withstanding Voltage:** 500 V (rms)
**Contact Rating:** 5-pin; 3A, 34 V DC
**Leakage Resistance:** $10^5$ MΩ
**Recommended Wire Size:** 22 wire gauge maximum

### MECHANICAL
### INSERTION/WITHDRAWAL FORCES:

| Number of Contacts | Insertion Force pound/N | Withdrawal Force pound/N |
|---|---|---|
| 2 | 3.6/(16) | .45- 2.7/(2-12) |
| 3 | 5.4/(24) | .67- 4.1/(3-18) |
| 4 | 7.2/(32) | .90- 5.4/(4-24) |
| 5 | 9.0/(40) | 1.24- 6.8/(5.5-30) |
| 6 | 10.8/(48) | 1.46- 8.1/(6.5-36) |
| 7 | 12.6/(56) | 1.68- 9.5/(7.5-42) |
| 8 | 14.4/(64) | 1.90-10.8/(8.5-48) |

**NOTE:** All connectors meet DIN specifications #41524. Din specification numbers (except for 4-pin, 5-pin @ 240°, and 8-pin @ 262°)

## MATERIAL
**Shell:** Die-cast zinc alloy, nickel-plated.
**Receptacle Mounting Flange:** Steel.
**Receptacle Body:** Plastic.
**Insert Material:** Plastic.
**Socket Contacts:** Tin-plated.
**Pin Contacts:** Tin-plated.
**Switching Contacts:** Silver-plated.
**Cable Relief Bushing:** Soft plastic.

### PIN ARRANGEMENTS

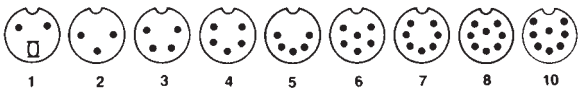


### CONTACT ARRANGEMENTS

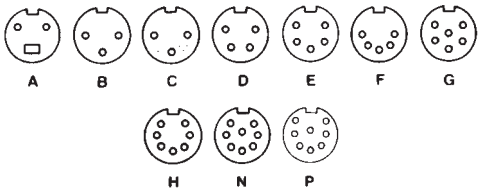


# DIN PLUGS

## STRAIGHT CORD PLUG
### with 30° lock ring

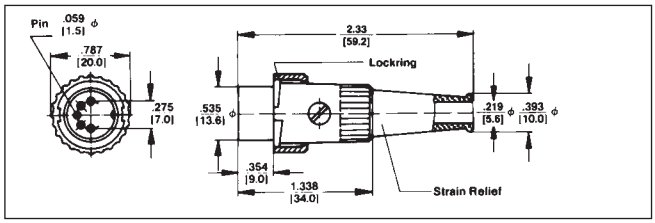


**Type 05CL5M – typical** Male plug with ground key-rib. Unique 30° turn lockring securely fastens two halves of connector. Mates with lock flange female connectors and receptacles. Insert screw holds insert assembly in shell and also retains lockring on shell. Flexible black strain relief with 7/32" diameter cable entry. Heavy duty clamp.

### ORDERING INFORMATION

| Part Number | Description | Pin Arrangement |
|---|---|---|
| **05CL3M** | 3 pins at 180° | 2 |
| **05CL5M** | 5 pins at 180° | 5 |
| **09CL4M** | 4 pins at 210° | 3 |
| **12CL5M** | 5 pins at 240° | 4 |
| **◊15CL7M** | 7 pins at 270° | 7 |
| **◊15CL8M** | 8 pins at 270° | 9 |

◊ Available on special order only; contact Switchcraft for price and delivery.

## STRAIGHT CORD PLUG
### with Shielded Barrel

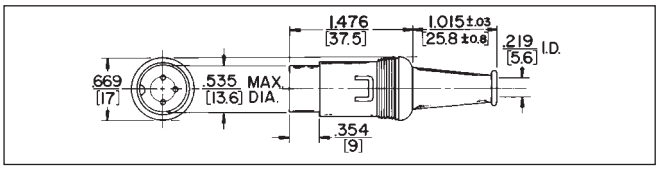


**Type 15GM7M – typical:** Male cord plug with shielded barrel and insulated snaplock plastic body. Two piece metal barrel surrounds pin insert to form an electrical shield. The entire insert assembly is held together by snapping the insulated plastic shell over the assembly. The barrel's special metal tab locks the shell in place. Standard color of plastic shell is gray. All-purpose cable clamp.

### ORDERING INFORMATION

| Part Number | Description | Pin Arrangement |
|---|---|---|
| **05GM3M** | 3 pins at 180°<br>Gray body and strain relief. | 2 |
| **05GM5M** | 5 pins at 180°<br>Gray body and strain relief | 5 |
| **◊09GM4M** | 4 pins at 210°<br>Gray body and strain relief | 3 |
| **12GM5M** | 5 pins at 240°<br>Gray body and strain relief | 4 |
| **◊12GM6M** | 6 pins at 240°<br>Gray body and strain relief | 6 |
| **15GM7M** | 7 pins at 270°<br>Gray body and strain relief | 7 |
| **15GM8M** | 8 pins at 270°<br>Gray body and strain relief | 9 |
| **◊20GM8M** | 8 pins at 262°<br>Gray body and strain relief | 10 |

**SPECIFYING NOTE:** Use letter "JL" in place of "GM" to order same part number with black housing.

DIMENSIONS ARE FOR REFERENCE ONLY Inch (mm)


® Registered trademark of Switchcraft, Inc.

* Please visit the product pages on our website for the most up-to-date product information

# DIN PLUGS AND RECEPTACLES

## STRAIGHT CORD PLUG with Extended Barrel

### TYPE 12BL6M – TYPICAL

Male plug with ground key-rib. Nickel-plated diecast handle. Contact friction coupling. Flexible black strain relief. Heavy duty cable clamp.

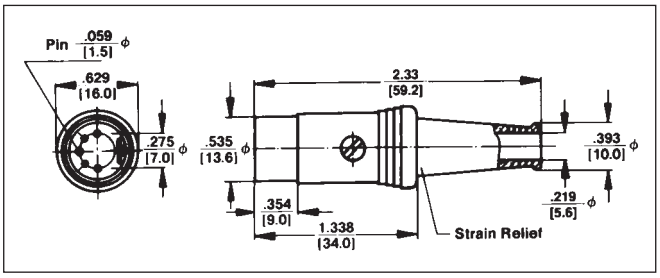


### ORDERING INFORMATION

| Part Number | Description | Pin Arrangement |
|---|---|---|
| ◊03BL2M | 2 pins with insulated switch actuator | 1 |
| 05BL3M | 3 pins at 180° | 2 |
| 05BL5M | 5 pins at 180° | 5 |
| 09BL4M | 4 pins at 210° | 3 |
| 12BL5M | 5 pins at 240° | 4 |
| 12BL6M | 6 pins at 240° | 6 |
| ◊15BL7M | 7 pins at 270° | 7 |
| ◊15BL8M | 8 pins at 270° | 8 |

## RIGHT-ANGLE CORD PLUG with 8 Position Barrel and 30° Lockring

### TYPE 05YL5M – TYPICAL

Right-angle chassis hugging, male plug with flexible strain relief. Unique 8-position barrel gives you a choice of any one of eight different cable entry angles. ground key rib 30° turn lockring securely fastens two halves of connector.

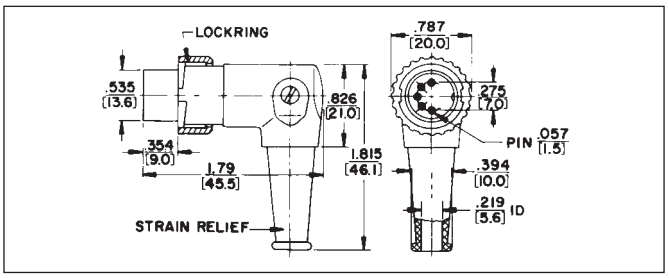


### ORDERING INFORMATION

| Part Number | Description | Pin Arrangement |
|---|---|---|
| ◊05YL3M | 3 pins at 180° | 2 |
| ◊05YL5M | 5 pins at 180° | 5 |
| ◊09YL4M | 4 pins at 210° | 3 |
| ◊12YL5M | 5 pins at 240° | 4 |

## RIGHT-ANGLE CORD PLUG with 8 Position Barrel

05DL5M shown

### TYPE 05DL5M – TYPICAL

Right-angle chassis hugging, male plug with flexible black rubber strain relief. Unique 8-position barrel offers a choice of eight different cable entry angles.

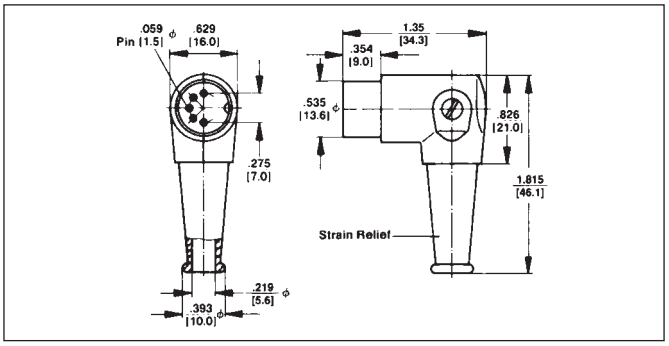


### ORDERING INFORMATION

| Part Number | Description | Pin Arrangement |
|---|---|---|
| ◊05DL3M | 3 pins at 180° | 2 |
| 05DL5M | 5 pins at 180° | 5 |
| ◊09DL4M | 4 pins at 210° | 3 |
| ◊12DL5M | 5 pins at 240° | 4 |
| ◊12DL6M | 6 pins at 240° | 6 |
| ◊15DL7M | 7 pins at 270° | 7 |

◊ Available on special order only; contact Switchcraft for price and delivery.

DIMENSIONS ARE FOR REFERENCE ONLY Inch (mm)

* Please visit the product pages on our website for the most up-to-date product information

# DIN PLUGS AND RECEPTACLES (continued)

## STRAIGHT CORD PLUG with Flush Socket Insert

### TYPE 06AL5F – TYPICAL

Female plug with ground contact. Diecast metal shell, nickel-plated. Two contact plug, Part number 04AL2F includes a break circuit switch (1-B) which is opened by engaging the insulated switch actuator of the mating plug or receptacle. Flexible black strain relief.

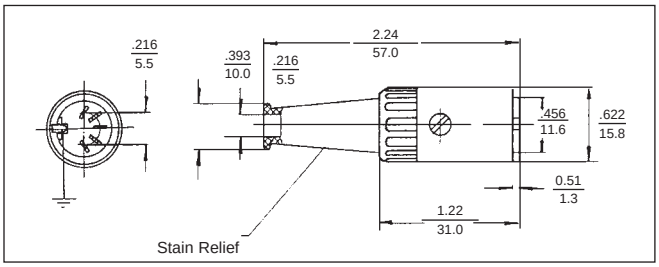


### ORDERING INFORMATION

| Part Number | Description | Contact Arrangement |
|---|---|---|
| **06AL5F** | 5 contacts at 180° | F |
| **◊13AL5F** | 5 contacts at 240° | E |
| **◊13AL6F** | 6 contacts at 240° | G |
| **◊15AL7F** | 7 contacts at 270° | H |
| **15AL8F** | 8 contacts at 270° | N |

## STRAIGHT CORD PLUG with Lock Flange

### TYPE 06EL5F – TYPICAL

Female plug with ground contact. Lock flange designed to accept 30° lockring. Insert screw firmly holds insert assembly in shell. Flexible black strain relief with 7/32" diameter cable entry. Heavy duty cable clamp.

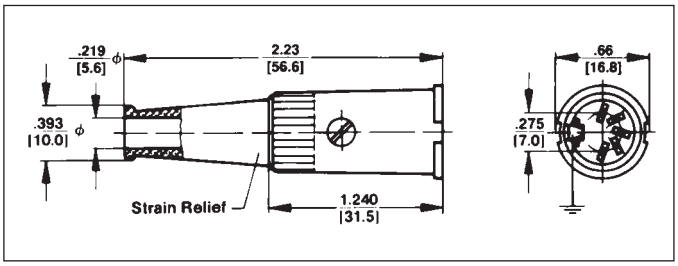


### ORDERING INFORMATION

| Part Number | Description | Contact Arrangement |
|---|---|---|
| **◊06EL5F** | 5 contacts at 180° | F |
| **13EL5F** | 5 contacts at 240° | E |
| **◊15EL8F** | 8 contacts at 270° | N |

## RECEPTACLE with Extended Shell

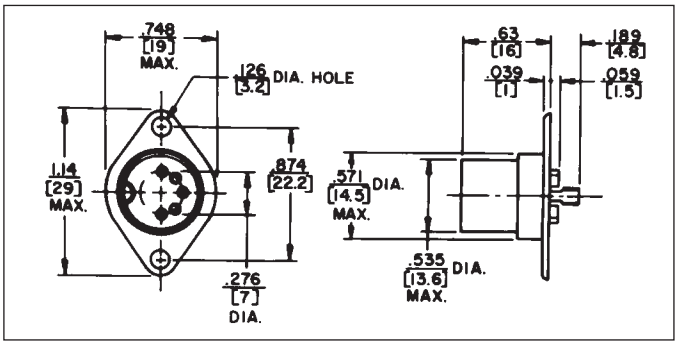


### TYPE 57KD3M – TYPICAL

Male receptacle, 3 pins, with ground key-rib. Diecast extended shell and flange for chassis or panel mounting. Turret terminals.

### ORDERING INFORMATION

| Part Number | Description | Pin Arrangement |
|---|---|---|
| **57KD3M** | 3 pins at 180° | 2 |

◊ Available on special order only; contact Switchcraft for price and delivery.

DIMENSIONS ARE FOR REFERENCE ONLY Inch (mm)



® Registered trademark of Switchcraft, Inc.
Note: Contact your Switchcraft Representative for price and delivery

* Please visit the product pages on our website for the most up-to-date product information

# DIN RECEPTACLES (continued)

## RECEPTACLE with Closed Circuit Switch

### TYPE 59GB3F – TYPICAL

Unique 3 and 5 contact receptacles include a 1-B (closed circuit) switch which is mounted to drawn metal shell. Switch is actuated by the shell of the mating plug. Receptacles also provide complete shielding through the ground contact. Flared solder terminals.

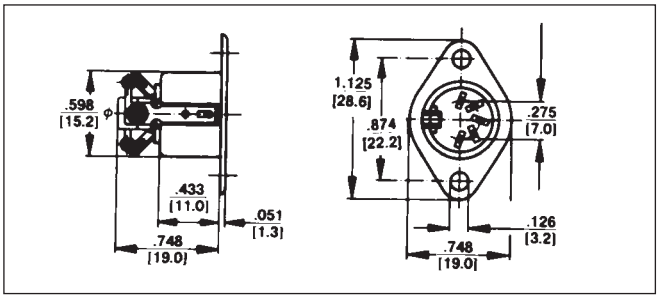


### ORDERING INFORMATION

| Part Number | Description | Contact Arrangement |
|---|---|---|
| ◊59GB3F | 3 contacts at 180° plus closed-circuit switch (Schematic #5) | B |

◊ Available on special order only; contact Switchcraft for price and delivery.

## RECEPTACLE for Chassis or Panel Mounting

**For shielded and extended barrel plugs**

### TYPE 57GB5F – TYPICAL – FLARED SOLDER TERMINALS

Drawn metal recessed shell with mounting flange and ground contact. Available flared solder terminals. Part Number 58GB3F features two extra blanks in insert for proper mating (5 pins at 180°) plug where applications may require greater connector flexibility. Flared solder terminals standard.

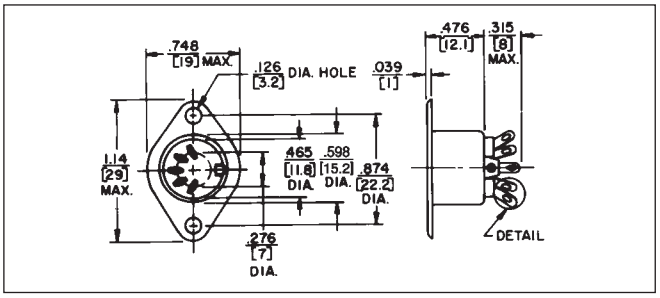


### ORDERING INFORMATION

| Part Number | Descriptions | Contact Arrangement |
|---|---|---|
| ◊57GB3F | 3 contacts at 180° | B |
| 57GB5F | 5 contacts at 180° | F |
| 60GB4F | 4 contacts at 210° | D |
| 61GB5F | 5 contacts at 240° | E |
| 61GB6F | 6 contacts at 240° | G |
| 62GB7F | 7 contacts at 270° | H |
| 62GB8F | 8 contacts at 270° | N |

◊ Available on special order only; contact Switchcraft for price and delivery.

DIMENSIONS ARE FOR REFERENCE ONLY Inch (mm)

* Please visit the product pages on our website for the most up-to-date product information

# DIN RECEPTACLES (continued)

**RECEPTACLE for Lockring Plug**
**Flared solder terminals on**
**Part Number 57HB5F**

## TYPE 61HA5F – TYPICAL

Female receptacle with ground contact. Chassis or panel mount. Diecast bayonet extension shell with mounting flange. Mates with all lockring plugs. such as Part Number 12CL5M. Part Number 55HA2F includes closed-circuit switch (1-B). All receptacles have straight solder terminals, except as noted.

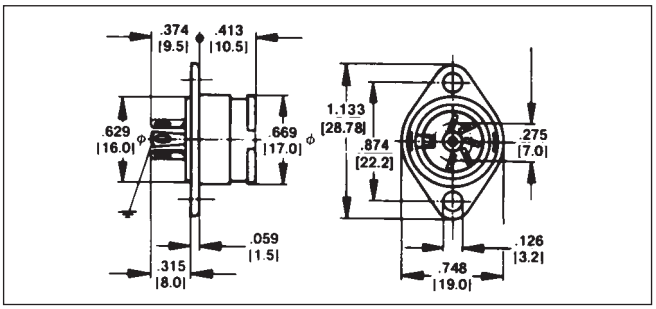


## ORDERING INFORMATION

| Part Number | Description | Pin Arrangement |
|---|---|---|
| ◊55HA2F | 2 contacts with closed-circuit switch (Schematic #4) | A |
| 57HB3F* | 3 contacts at 180° | B |
| 57HB5F* | 5 contacts at 180° | F |
| 60HA4F | 4 contacts at 210° | D |
| 61HA5F | 5 contacts at 240° | E |
| 62HB7F* | 7 contacts at 270° | H |
| 62HB8F* | 8 contacts at 270° | N |

*Flared solder terminals
"A" in part number indicates straight terminal. (solder lug).
◊ Available on special order only; contact Switchcraft for price and delivery.

**RECEPTACLE**
**for Printed Circuit Board Mounting**

## TYPE 57NC5F – TYPICAL

Mounts to printed circuit boards. Special PC type terminals "snap-in" precut boards. See drawing. Tubular metal shell with ground contact. Part Number 58NC3F mates with either 3 pin or 5 pin (at 180°) plugs because of its 2 extra blanks in the contact insert.

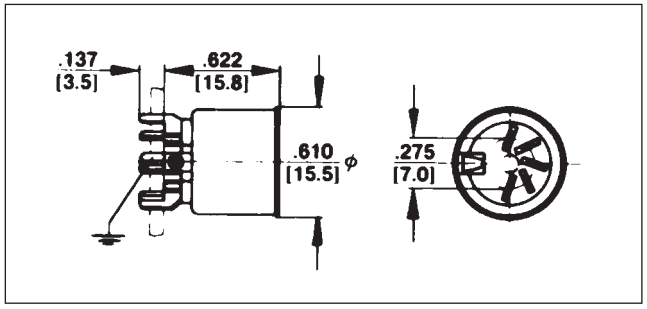


## ORDERING INFORMATION

| Part Number | Description | Contact Arrangement |
|---|---|---|
| 57NC5F | 5 contacts at 180° | F |
| ◊58NC3F | 3 contacts at 180° 2 extra blanks | C |
| ◊60NC4F | 4 contacts at 210° | D |
| 61NC5F | 5 contacts at 240° | E |
| ◊62NC7F | 7 contacts at 270° | H |
| 62NC8F | 8 contacts at 270° | N |

"C" in part number indicates PC terminals.
◊ Available on special order only; contact Switchcraft for price and delivery.

DIMENSIONS ARE FOR REFERENCE ONLY Inch (mm)


® Registered trademark of Switchcraft, Inc.
Note: Contact your Switchcraft Representative for price and delivery

* Please visit the product pages on our website for the most up-to-date product information

## RIGHT-ANGLE RECEPTACLE
**for Printed Circuit Board Mounting**

### TYPE 57PC5F–TYPICAL
Mounts to PC boards. Plugs connect at right-angle to mounting surface. Part Number 57PC3F mates with either 3 or 5 pin (at 180°) plugs because of two extra blanks in contact insert. ground contact provides complete shielding through receptacles.

### ORDERING INFORMATION

| Part Number | Description | Contact Arrangement |
|---|---|---|
| ◊57PC3F | 3 contacts at 180° | B |
| 57PC5F | 5 contacts at 180° | F |
| ◊60PC4F | 4 contacts at 210° | D |
| 61PC5F | 5 contacts at 240° | E |
| 61PC6F | 6 contacts at 240° | G |
| ◊62PC7F | 7 contacts at 270° | H |
| 62PC8F | 8 contacts at 270° | N |

◊ Available on special order only; contact Switchcraft for price and delivery.

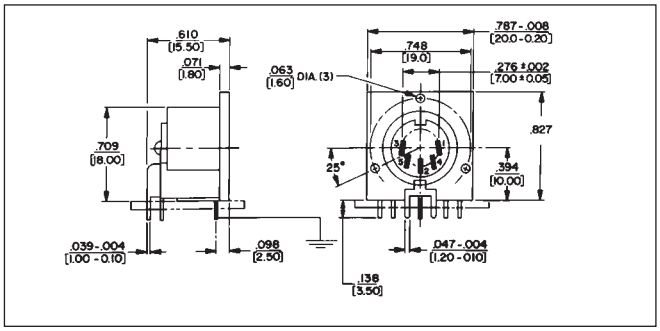


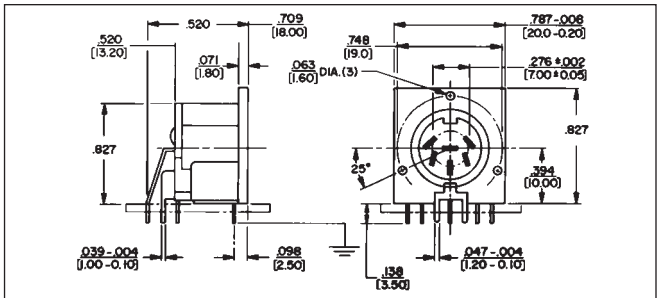


61PC5F, 61PC6F

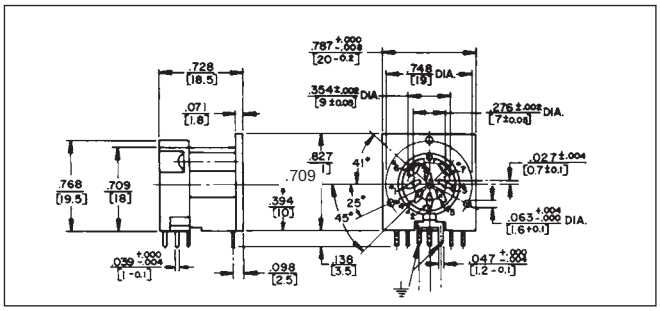


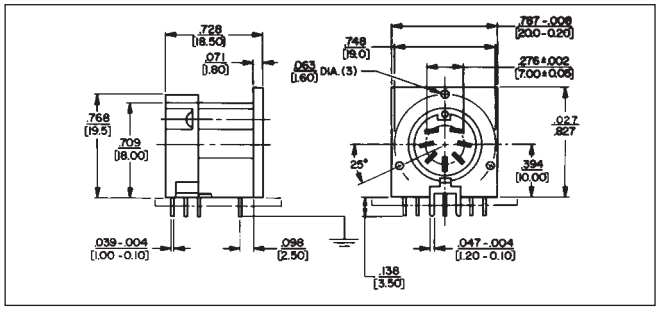


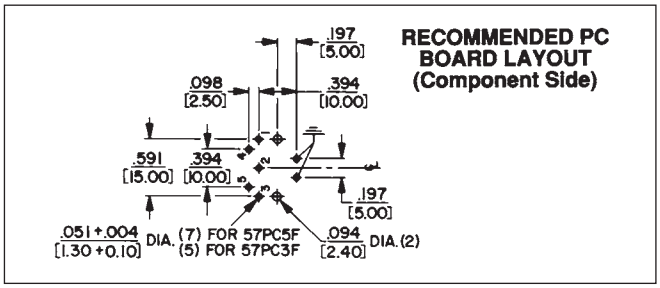


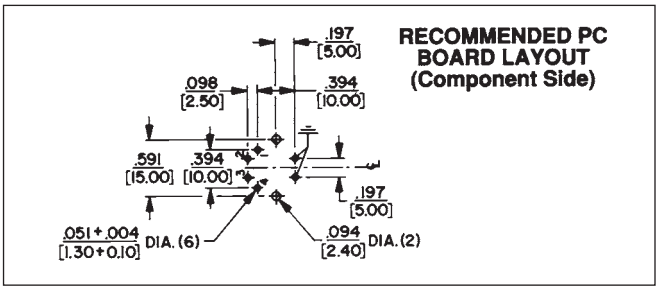


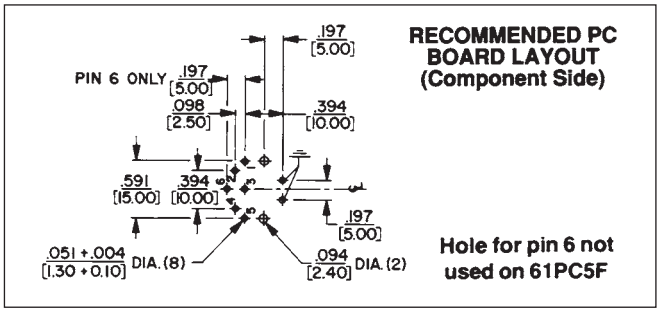


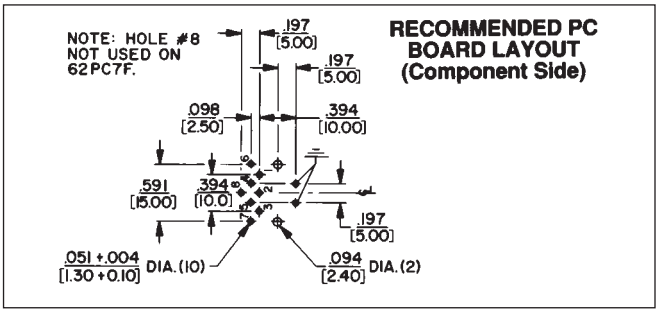


DIMENSIONS ARE FOR REFERENCE ONLY Inch (mm)

* Please visit the product pages on our website for the most up-to-date product information

| Part Number | Description | Contact Arrangement |
|---|---|---|
| ◊57PC3FS | 3 contacts at 180° | B |
| 57PC5FS | 5 contacts at 180° | F |
| ◊60PC4FS | 4 contacts at 210° | D |
| 61PC5FS | 5 contacts at 240° | E |
| 61PC6FS | 6 contacts at 240° | G |
| 62PC7FS | 7 contacts at 270° | H |
| 62PC8FS | 8 contacts at 270° | N |

SPECIFYING NOTE: Another series of receptacles with a trimmed metal flange .052" (1.32 mm) below housing top is available. Replace suffix "S" with "T" in part numbers above to specify these receptacles or contact Switchcraft.
Mounting: #2 or #3 self-tapping screw.
◊ Available on special order only; contact Switchcraft for price and delivery.

## RIGHT-ANGLE SHIELDED RECEPTACLE
**for printed circuit board mounting**

## TYPE 60PC4FS–TYPICAL

Similar to 57PC5F – Typical, except flange surrounding face of insert is metal to provide through-grounding between plug and receptacle and to potential panel/chassis for common grounding.

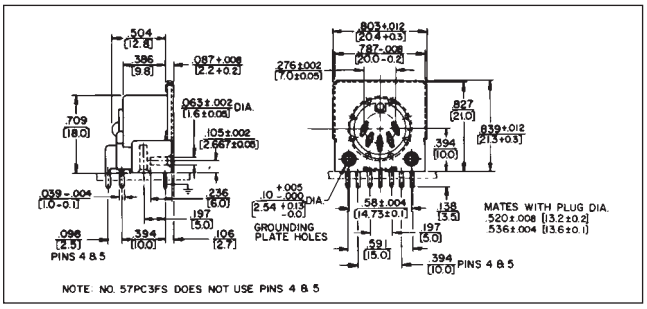


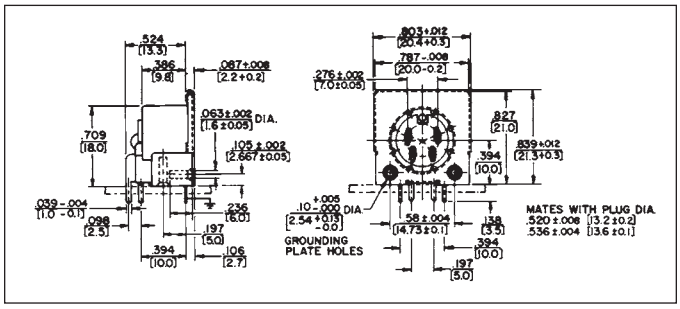


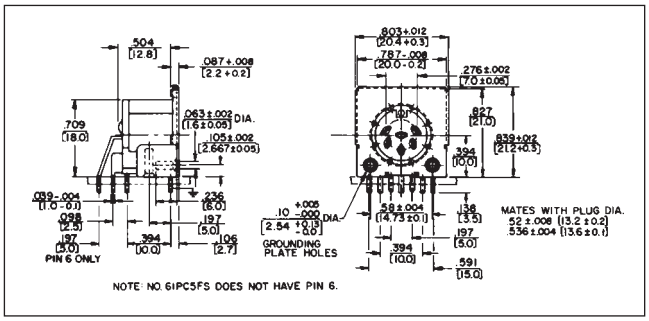


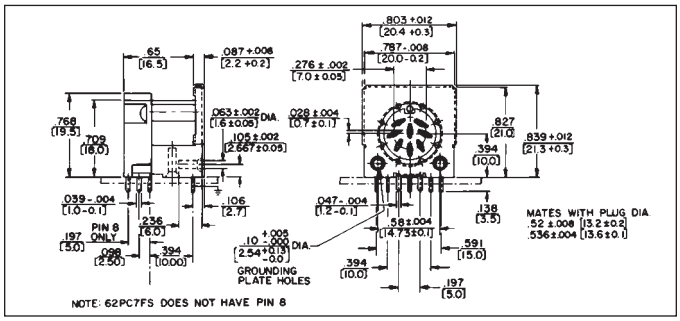


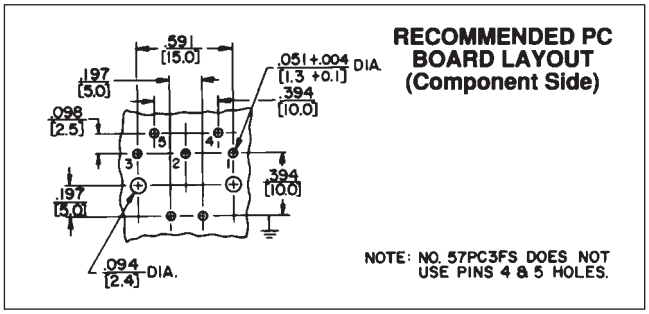


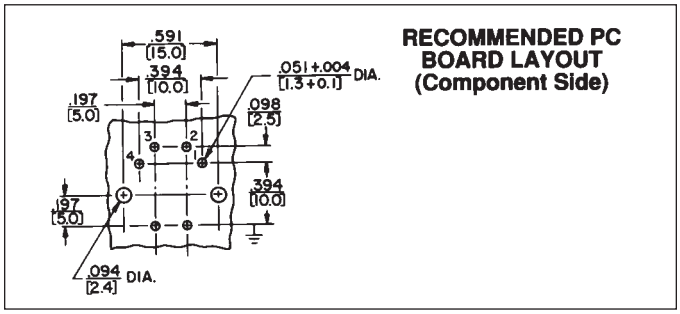


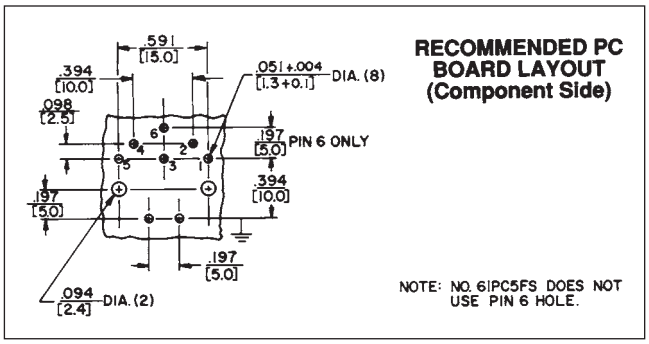


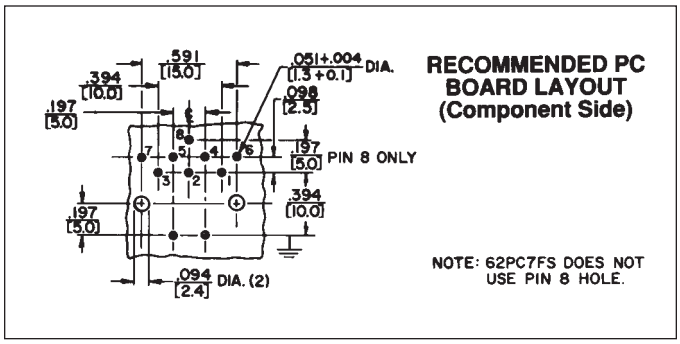


DIMENSIONS ARE FOR REFERENCE ONLY Inch (mm)



® Registered trademark of Switchcraft, Inc.
Note: Contact your Switchcraft Representative for price and delivery

* Please visit the product pages on our website for the most up-to-date product information

# DIN RECEPTACLES (continued)

## MINI-DIN RIGHT-ANGLE RECEPTACLES

Miniature DIN right-angle connectors are designed for personal computer, video and data communications, medical and instrumentation equipment and systems.

### RIGHT-ANGLE, PC MOUNT RECEPTACLES

Available with 3 through 8 contacts, female only, receptacles also have a standard (and separate) ground contact system. Ground terminal can be straight or snap-in type. Snap-in terminals are bifurcated to assure tight hold down on PC board before, during and after soldering. Solder wicking around the terminal strengthens the connection. Additionally, PC terminals are staggered to assure more “hold down” capability during soldering.

Receptacle/plug retention is “friction” type, and a separate outer shield can be specified.

**Series SMD*FRAX10:** 3 through 8 contacts, female, right-angle PC mount, straight ground terminal, and no outer shield.

**Series SMD*FRAX20:** Same as SMD*FRAX10, except with bifurcated snap-in ground terminal.

**Series SMD*FRAX11:** 3 through 8 contacts, female, right-angle PC mount, straight ground terminal, and outer shield.

**Series SMD*FRAX21:** Same as SMD*FRAX11, except with snap-in ground terminal.

**Series DMD*FRAX111:** Dual stacked miniature DIN connectors, available in 4, 5, 6, and 8 contacts. Shielded and non-shielded versions available.

**Dimensions:** .552" (14 mm) wide x .502" (12.8 mm maximum depth x .642" (16.3 mm) height, including terminals.

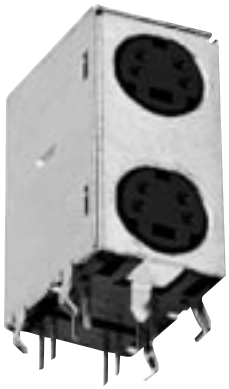

### SPECIFICATIONS

**Ratings:** 1A, 100 VAC; 2A, 12 VDC.
**Insulation Resistance:** 50 MΩ minimum
**Dielectric Strength:** 250 VDC for 1 minute.
**Contact Resistance:** 30 mΩ maximum
**Insertion/Withdrawal Force:** 0.8 to 5 kilograms
**Withdrawal Force:** 0.8 to 4 kilograms
**Contacts/Terminals:** Copper alloy, silver or gold-plated
**Ground Terminal:** Copper alloy, nickel-plated.
**External Shield:** Copper alloy, solder-coated.
**Body:** Black molded thermoplastic, UL 94V-0.

### MINI-DIN RIGHT-ANGLE RECEPTACLES PART NUMBER SCHEME

| Series | Contacts | Style | Shield/Ground | Optional Mounting Screw Hole |
|---|---|---|---|---|
| **SMD-Single**<br>**DMD-Dual** | Insert#:<br>3-8 | FRA | 110: Unshielded, no snap-in ground<br>111: Shielded, no snap-in ground<br>120: Unshielded, snap-in ground<br>121: Shielded, snap-in ground | A: Adds screw hole<br>Blank: None |

Note: Dual available in 4,5,6, and 8 only
Note: Snap-in ground available on single only
Note: Optional mounting screw hole available on dual only
Note: Special order only, contact factory for details

**CONTACT ARRANGEMENTS**
(viewed from contact side)

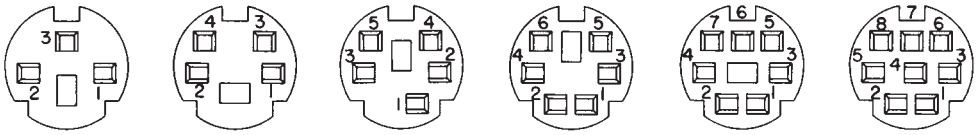

3 4 5 6 7 8

DIMENSIONS ARE FOR REFERENCE ONLY Inch (mm)

* Please visit the product pages on our website for the most up-to-date product information



# DIN RECEPTACLES (continued)

## SMD SERIES

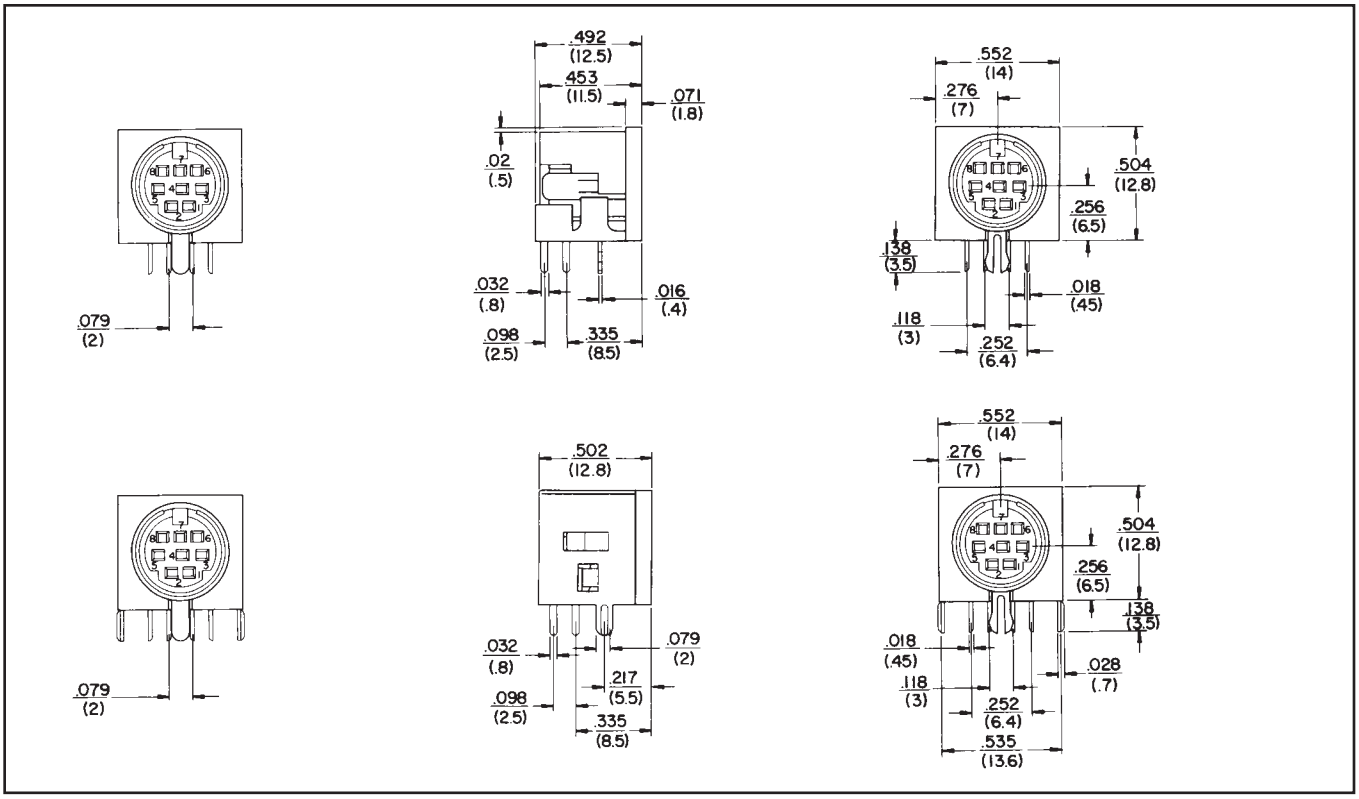


## RECOMMENDED PC BOARD LAYOUTS (Viewed from component side)

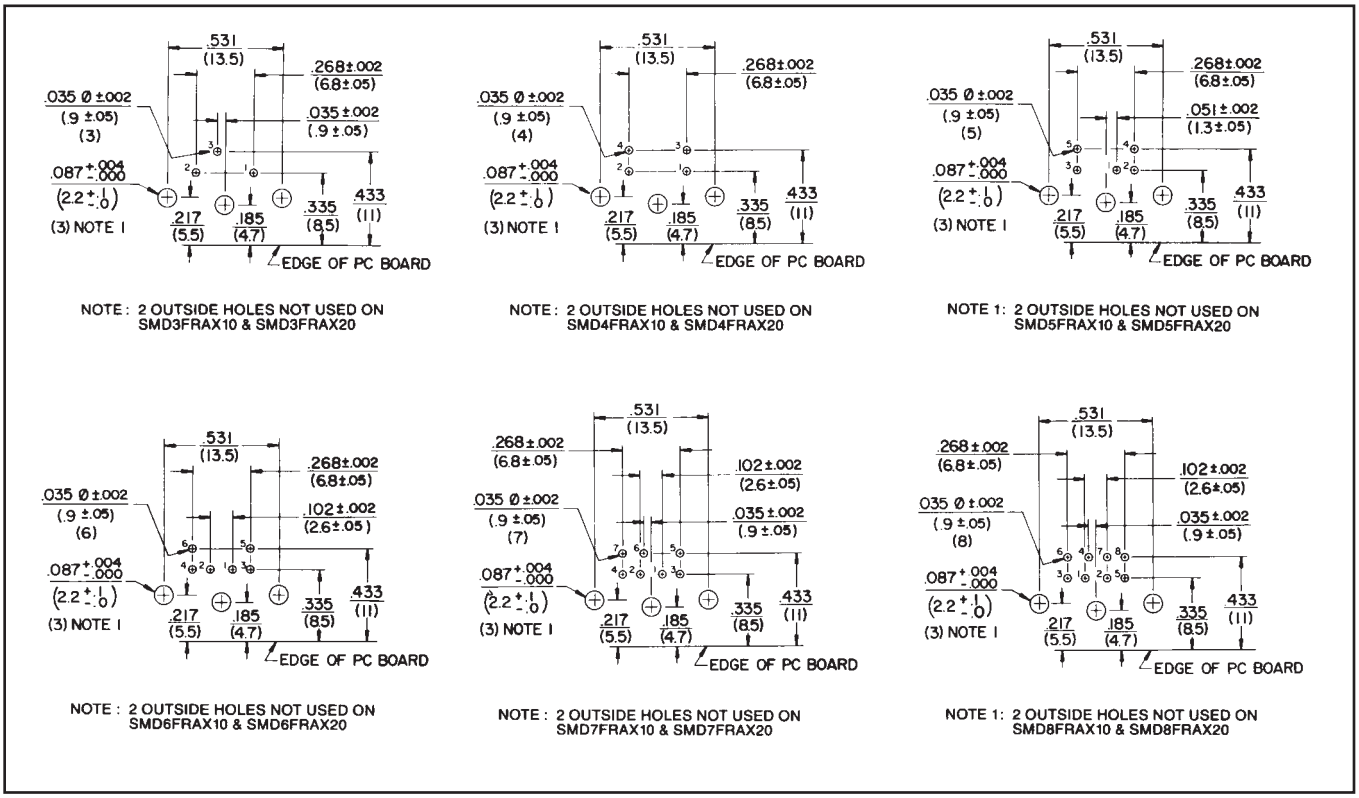


DIMENSIONS ARE FOR REFERENCE ONLY Inch (mm)



® Registered trademark of Switchcraft, Inc.
Note: Contact your Switchcraft Representative for price and delivery

* Please visit the product pages on our website for the most up-to-date product information

## DIN RECEPTACLES (continued)

**DMD SERIES**

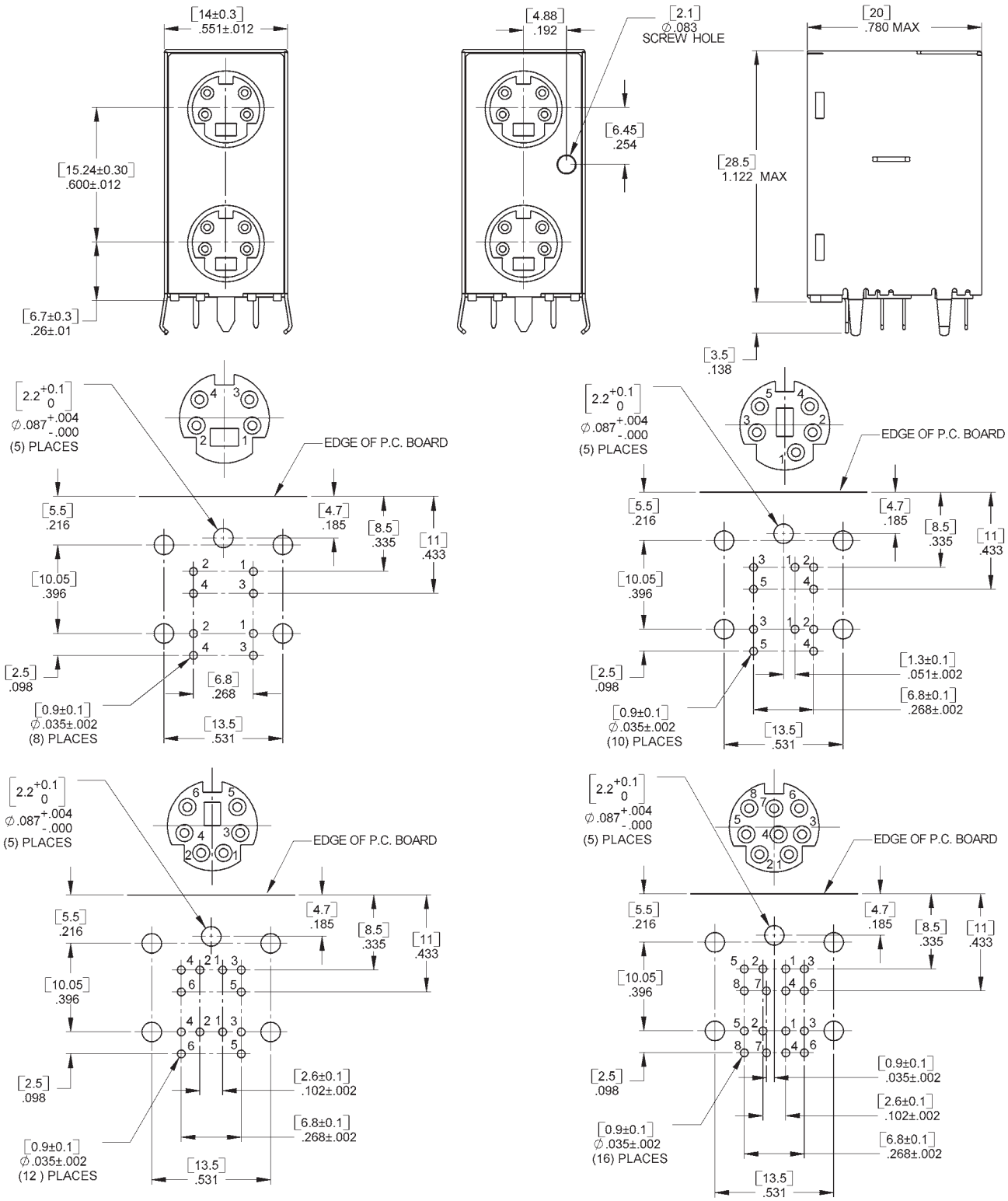


DIMENSIONS ARE FOR REFERENCE ONLY Inch (mm)

* Please visit the product pages on our website for the most up-to-date product information

# SINGLE AND DUAL STACKED USB CONNECTORS

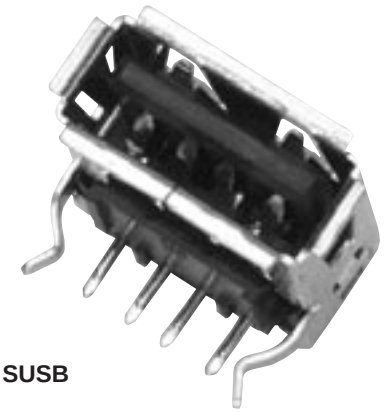

SUSB

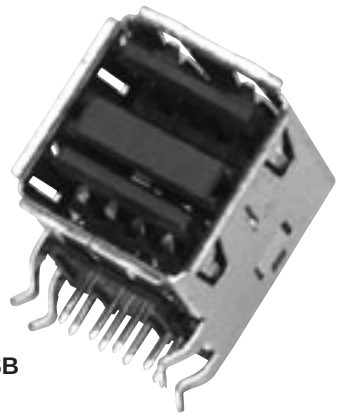

DUSB

Switchcraft introduces single and dual USB connectors. The USB connectors are fast becoming the industry standard for plug and play connectivity between PCs and their peripherals. The DUSB and USB connectors are RAPC mounted, with kinked terminals for snap-in placement to the PC board. Both meet all Universal Serial Bus standards.

## FEATURES AND BENEFITS

- Snap-in terminals facilitate wave soldering
- Shielded for reduced EMI/RFI emissions
- Dual stacked version increases PC board density

## APPLICATIONS

- Personal Computer
- Data Communications
- Medical Equipment
- Test Equipment
- Instrumentation

## SPECIFICATIONS

### GENERAL

**Voltage Rating:** 30 VAC (rms) Max.
**Current Rating:** Signal application only, 1A Max. per contact
**Contact Resistance:** 25m ohms Max. initial
**Temperature Rating:** 32°F to 104°F (0°C to 40°C)
**Insertion Force:** 7.7 lbs Max. (3.5 kg Max.)
**Withdrawal Force:** 0.8 lb Min. (0.4 kg Min.)
**Life:** 1500 cycles

## MATERIALS

**Body:** Black, molded thermoplastic, UL 94V-0
**Shell:** Copper alloy, tin plated
**Contact Terminal:** Copper alloy, gold plating in mating area, tin plating on solder tails, all over nickel plating.

| Part Number | Description |
|---|---|
| SUSB Single | USB Connector |
| DUSB Dual Stacked | USB Connector |

Note: Special order only, contact factory for details.

DIMENSIONS ARE FOR REFERENCE ONLY Inch (mm)



® Registered trademark of Switchcraft, Inc.
Note: Contact your Switchcraft Representative for price and delivery

* Please visit the product pages on our website for the most up-to-date product information

## SINGLE AND DUAL STACKED USB CONNECTORS (continued)

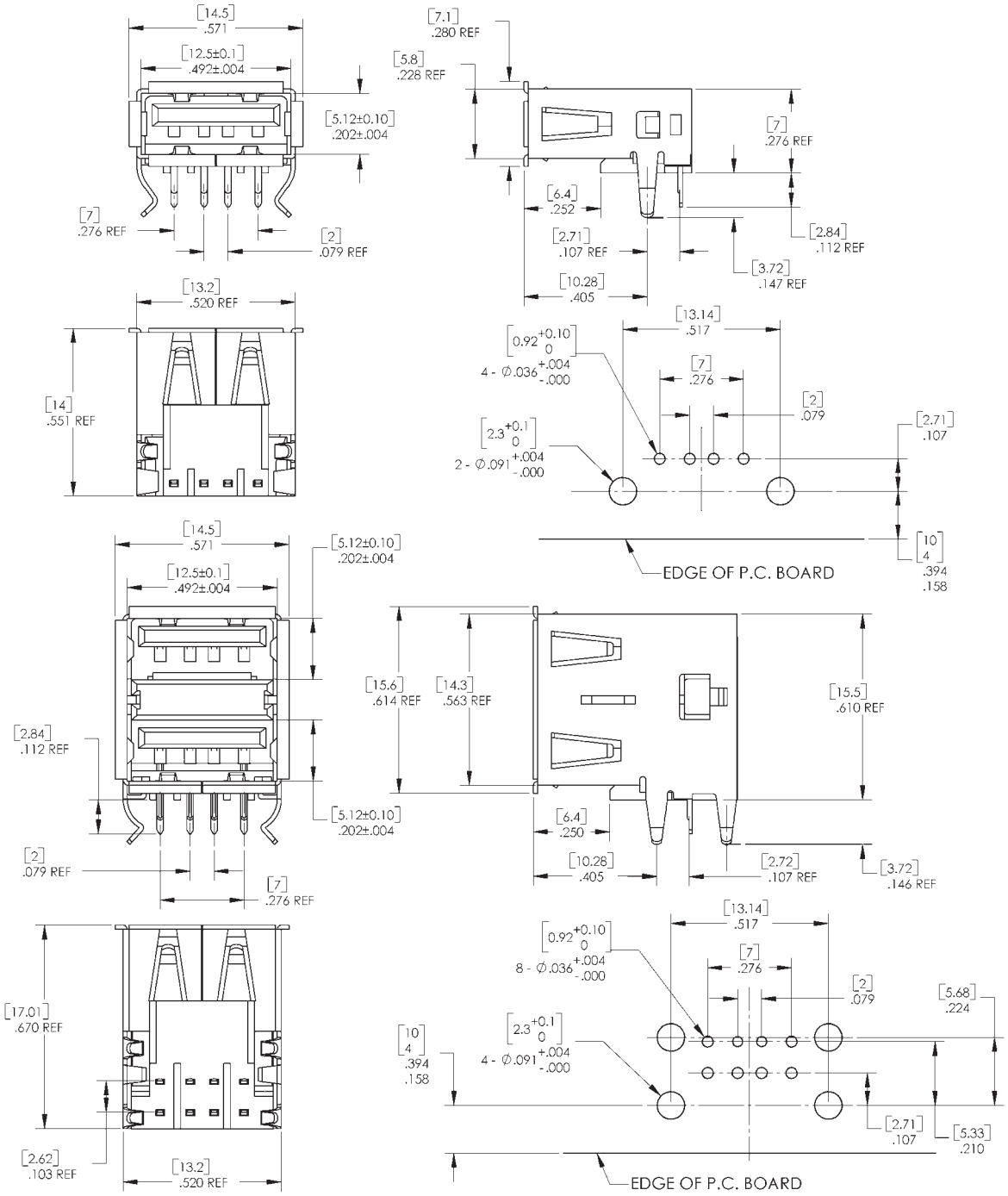


DIMENSIONS ARE FOR REFERENCE ONLY Inch (mm)

* Please visit the product pages on our website for the most up-to-date product information



# IEEE 1394 FIREWIRE CONNECTORS

**1394RAPC**

**1394SMT**

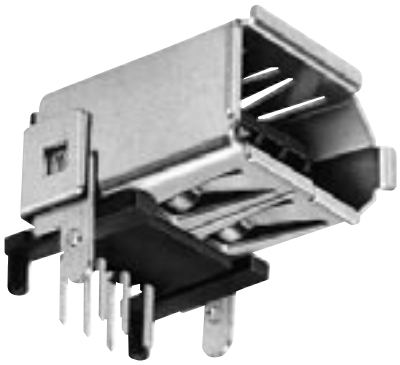

Switchcraft introduces both right angle PC and surface mount versions of IEEE 1394 Firewire connectors. The Firewire connectors are becoming another connector standard used in the upcoming multimedia/computer market. The connectors meet IEEE 1394R-4006N Series standards.

## FEATURES AND BENEFITS

- Shielded housings to reduce EMI/RFI emissions
- Mounting posts add stability for wave soldering
- Low profile requires less space

## APPLICATIONS

- Multimedia
- Video
- Personal Computers
- Computer Peripherals

## SPECIFICATIONS

### GENERAL

**Voltage Rating:** 40 VAC
**Current Rating:** 1.5A
**Contact Resistance:** 30m Ohms Max.
**Temperature Rating:** -55°C to +105°C
**Insertion Force:** 6.0 lbs. Max.
**Withdrawal Force:** 4.4 lbs. Min.
**Lifecycles:** 1,500 Min.

| Part Number | Description |
|---|---|
| **1394RAPC** | IEEE 1394 RAPC |
| **1394SMT** | IEEE 1394 SMT |

Note: Special order only, contact factory for details.

DIMENSIONS ARE FOR REFERENCE ONLY Inch (mm)



® Registered trademark of Switchcraft, Inc.
Note: Contact your Switchcraft Representative for price and delivery

* Please visit the product pages on our website for the most up-to-date product information

## IEEE 1394 FIREWIRE CONNECTORS (continued)

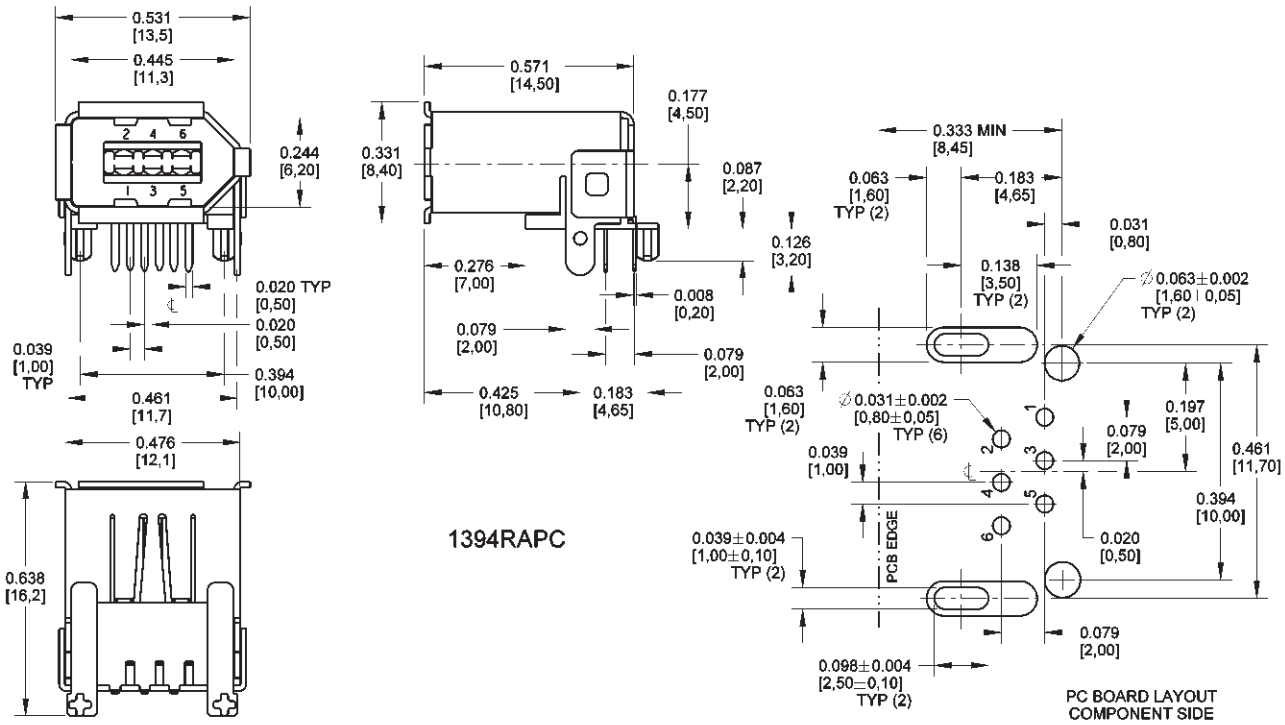


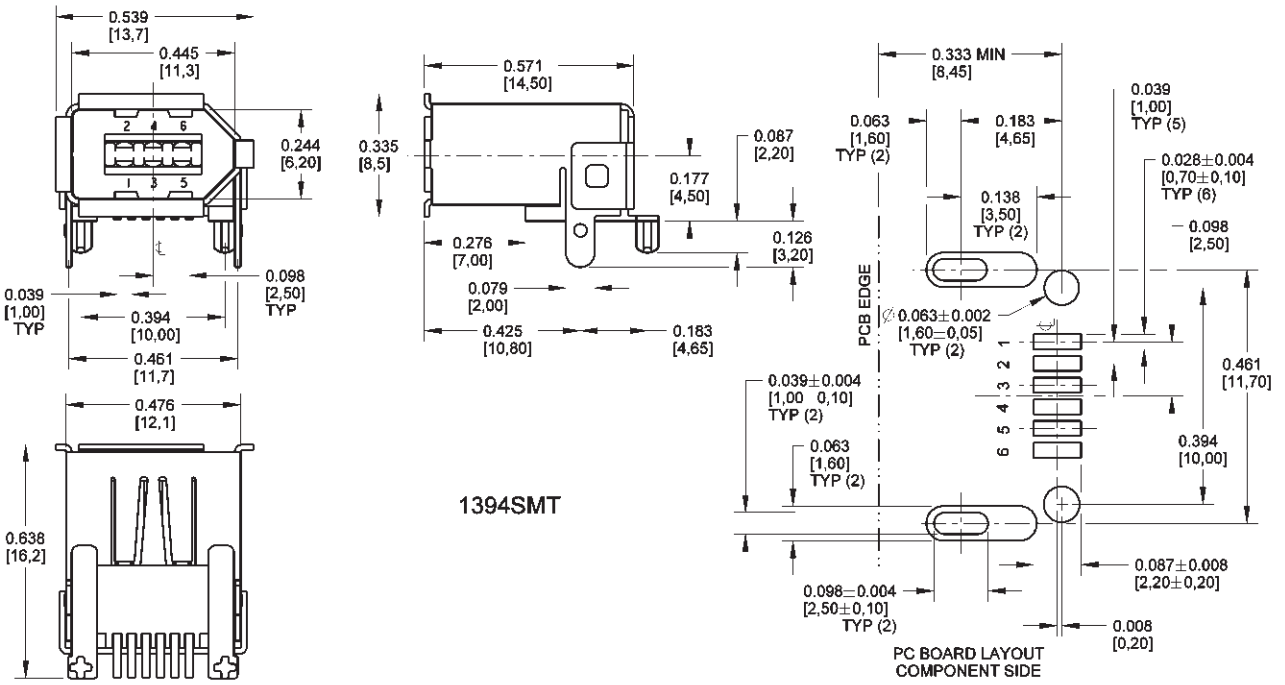


DIMENSIONS ARE FOR REFERENCE ONLY Inch (mm)

* Please visit the product pages on our website for the most up-to-date product information

# SLIM-LINE CONNECTORS

**TYPICAL SL172F REAR MOUNT RECEPTACLE**

**TYPICAL SL402M CORD PLUG**

**HEX NUT**
Used in mounting rear or front of panel receptacles (supplied standard).

**THREADED BUSHING**
Coupler ring on mating plug threads onto bushing and keeps plug/receptacle from working loose.

**FEMALE INSERT***
Rugged molded black plastic barrel construction; positively keyed to housing.

**FLATTED BARREL**
Keys to inside flat on male insert. Polarizes the connection. Correct mating every time.

**PIN TERMINALS**
Large, rugged plated copper alloy; solder cup type.

**CABLE CLAMP**
Extra large and rugged clamp protects soldered terminations (also facilitates grounding/shielding feature when used on receptacle insert).

**CORD PLUG HOUSING**
Precision-drawn, plated copper alloy with non-glare matte finish.

**STRAIN RELIEF SPRING**
Provides positive relief from cable wear at opening in plug housing.

**LOCK WASHER**
Prevents rear or front of panel receptacle from working loose when installed (supplied standard).

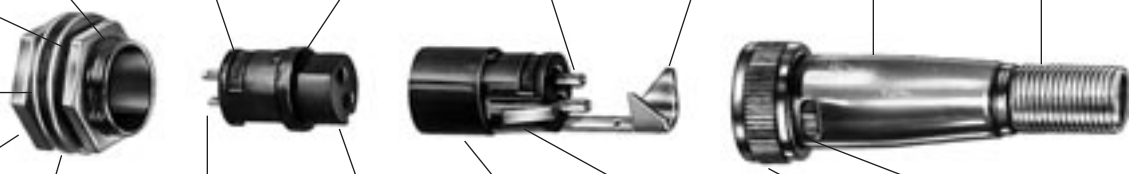

**REAR OF PANEL MOUNT RECEPTACLE**
Tough, plated diecast housing with non-reflecting matte finish. Mounts in D-shape (self-keyed) hole. Other receptacle types are: Front of Panel Mount and Flange Mount.

**FLAT WASHER**
Used in mounting rear and front of panel receptacles (supplied standard).

**CONTACT TERMINALS**
Rugged solder lug type; copper alloy plated

**CONTACTS**
Held captive in insert. Excellent pin retention force. Copper alloy plated.

**MALE INSERT***
Rugged black plastic; keyed to housing. Durable plated copper alloy pins are 100% molded-in.

***NOTE:** Insert fits both plug and receptacle housings; can be interchanged at any time.

**LATCH SPRING**
Captive spring locks insert to housing

**COUPLER RING**
Held captive on plug; non-reflective matte finish. Threads onto receptacle bushing (or mating plug) to hold connector halves secure from accidental separation.

**LATCH DETENT**
Latch spring on insert seats in detent to hold insert firmly in housing.

## DESIGN FEATURES

Slim-Line® Audio Connectors are a unique series of premium quality connectors featuring interchangeable inserts which allow any plug or receptacle to be male or female. This versatility is valuable in a wide variety of applications: microphones, public address systems, 2-way, CB, ham, and marine radios, audio-visual systems, industrial control and instrumentation, broadcast, security and medical electronics.

## APPLICATIONS

**Retrofit/Replacement;** Slim Line Cord Plug **(SL405M)** and Receptacle **(SL105F)** are recommended as a possible choice to replace Switchcraft/DIN plug **(12CL5M)** and receptacle **(55HA5F)**. Receptacle **SL105F** fits the same mounting holes as the Switchcraft/DIN receptacle.

Four pin/contact Slim-Line plugs and receptacles are recommended as direct replacements for the original Slim-Line connectors, Series **2504**, and for the molded version of the Slim-Line connector, **Style ST34**.

## RECEPTACLES

Three types of receptacles can be specified:

**1. Flange mount (Series SL10)**
**2. Rear of panel mount (Series SL17)**

Receptacles can be specified with same male and female insert combinations as cord plugs. For rear and front of panel mounting types, hex nuts, lock washers, and flat washers are supplied. For flange mount receptacles, mounting holes in flange accept #4 machine screw or .125" (3.18 mm) diameter rivet.

## CORD PLUGS

Miniature Cord Plugs feature nickel-plated copper alloy housings with matte finish on exterior parts. Plugs may be specified with inserts having 2-, 3-, 4- and 5-pins (male) or contacts (female), or 2-, 3-, or 4-contact receptacles having shunts (N.C.) on two contacts (special order only). Extra large cable clamp protects against pulling and twisting strains on terminations. Strain relief spring protects against excess cable wear at entry point at rear of housing. Cord plugs accept cables up to .281" (7.14 mm) diameter. Captive coupler ring feature **(Series SL40)** provides secure mechanical connection and protection against shock and vibration between cord plugs and mating plug **(Series SL41)** or receptacle.

DIMENSIONS ARE FOR REFERENCE ONLY Inch (mm)



® Registered trademark of Switchcraft, Inc.
Note: Contact your Switchcraft Representative for price and delivery

* Please visit the product pages on our website for the most up-to-date product information

# SLIM-LINE CONNECTORS (continued)

## INSERTS

Inserts are molded of high-strength plastic, and are completely interchangeable between plug and receptacle housings at any time. Inserts are keyed to housings, and male and female inserts are polarized to prevent mismating.

### PIN/CONTACT CONFIGURATIONS:

| Pins | Contacts | Contacts (Shunts) |
|---|---|---|
| 2 | 2 | 2 (N.C. Shunt on each contact) |
| 3 | 3 | 3 (N.C. Shunts on contacts 1 and 3) |
| 4 | 4 | 4 (N.C. Shunts on contacts 1 and 4) |
| 5 | 5 | – |

◊Add an "S" to end of part number for shunts. Special order only.

Insert is installed from front, and the captive latch spring locks insert to housing. To remove insert from receptacle, depress latch spring and apply pressure to rear of insert (**DO NOT APPLY PRESSURE TO TERMINALS**). On cord plugs, depress latch spring and press in on strain relief to free the insert.

## GROUNDING/SHIELDING

Housings shield internal connections and provide ground (common) connections without using a pin/contact. On cord plugs, ground lead (or shield) is connected to cable clamp. For receptacles Cable Clamp, **SL04** is ordered separately as a special and installed. If desired, ground/shield connection may then be made to clamp. When mated, a continuous, shielded, low resistance path is made through the connector.

| Part Number | Item |
|---|---|
| ◊**SL01** | Hex Nut |
| ◊**SL02** | Lockwasher |
| ◊**SL03** | Flat Washer |
| ◊**SL04** | Cable Clamp |
| ◊**SL05** | Strain Relief Spring |

## SPECIFICATIONS

### MATERIALS

**Receptacle Housings**: Die-cast zinc, nickel-plated.
**Cord Plug Housings**: Copper alloy, nickel-plated.
**Inserts**: Glass-reinforced thermoplastic. UL 94 V-0.
**Female Contacts**: Copper alloy, silver-plated, solder lug type.
**Pins**: Copper alloy, silver-plated, solder cup type.
**Cable Clamp, Strain Relief, and Mounting Hardware**: Steel, plated. **Latch**: Steel, plated.

### ELECTRICAL

**Current Rating**: 5 Amps carry only.

### MOUNTING

**Cord Plugs:** Plugs accept cables up to .281" (7.14 mm) diameter.

**Receptacles:** Flange mount type mounts in panels or chassis up to .188" (4.78 mm) thick. .125" (3.18 mm) diameter holes accept #4 machine screws or .125" (3.18 mm) diameter rivets. Rear and front of panel types mount in "D"-shaped hole in panels or chassis up to .219" (5.56 mm) thick. Hex nut (**SL01**), lockwasher (**SL02**), and flat washer (**SL03**) are supplied for mounting.

### CABLE CLAMP AND STRAIN RELIEF

**Cord Plugs:** Plugs are supplied with rugged cable clamps and strain relief springs. Cable clamp serves two valuable functions: to firmly hold cable to prevent pulling or twisting strains on soldered terminations, and as a connecting point for ground (common) or shield when grounding/shielding through the connector is required.

**Receptacles:** Receptacles are not supplied standard with cable clamp for strain relief. If grounding/shielding feature is desired, separate Cable Clamp, **SL04**, is installed on receptacle insert.

### MOUNTING HARDWARE

(Supplied with Series SL17 and SL18 receptacles)

## SLIM-LINE CONNECTOR PART NUMBERING SYSTEM

| SERIES | HOUSING TYPE | Number of Contacts | Gender | Options |
|---|---|---|---|---|
| SL SLIM-LINE | — NONE | 2 | M MALE | S WITH SHUNTS |
| | 10 RECEPTACLE, FLANGE MOUNT | 3 | F FEMALE | |
| | 17 RECEPTACLE, REAR MOUNT | 4 | | |
| | 18 RECEPTACLE, FRONT MOUNT | 5 | | |
| | 40 CORD PLUG WITH COUPLING RING | | | |
| | 41 CORD PLUG WITHOUT COUPLING RING | | | |

## PIN AND CONTACT ARRANGEMENTS

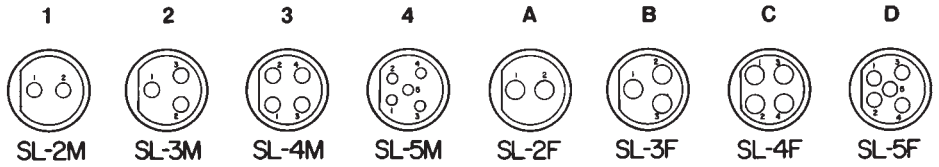


## SCHEMATIC CIRCUITS

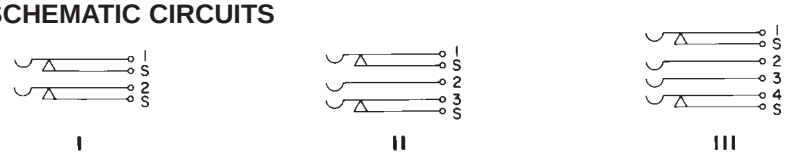


DIMENSIONS ARE FOR REFERENCE ONLY Inch (mm)

* Please visit the product pages on our website for the most up-to-date product information



# SLIM-LINE CONNECTORS (continued)

## SL40 CORD PLUG with Coupler Ring

SL402M (typical)

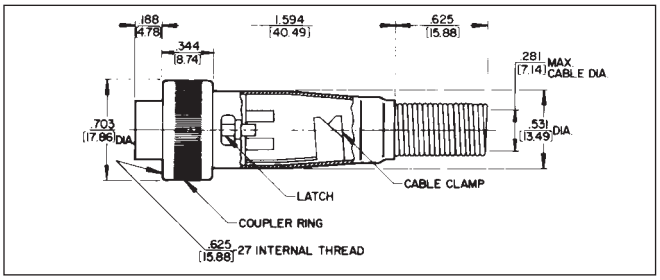


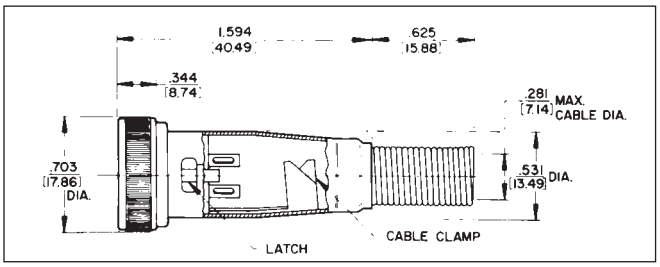


Non-reflective metal shell; coupling ring; 2 through 5 pins (male) or 2 through 5 contacts (female). Also 2-, 3- and 4-contact inserts with two shunted (N.C.) contacts. Efficient cable clamp and strain relief.

### SL MALE CORD PLUGS

| Part Number | Pins | Pin Arrangements |
|---|---|---|
| SL402M | 2 | 1 |
| SL403M | 3 | 2 |
| SL404M | 4 | 3 |
| SL405M | 5 | 4 |

### SL FEMALE CORD PLUGS

| Part Number | Contact | Contact Arrangements |
|---|---|---|
| SL402F | 2 | A |
| SL403F | 3 | B |
| SL404F | 4 | C |
| SL405F | 5 | D |

## SL41 CORD PLUG without Coupler Ring

SL413F (typical)

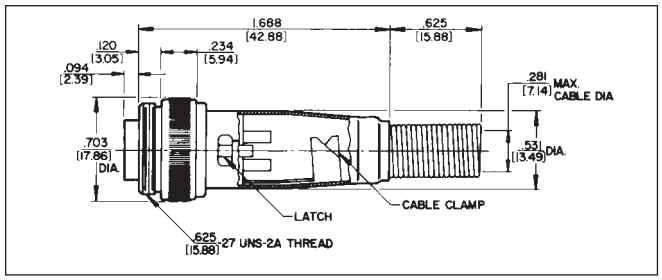


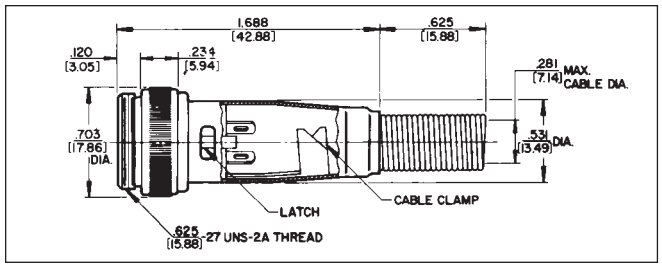


Non-reflective metal shell; 2 through 5 pins (male) or 2 through 5 contacts (female). Also 2-, 3- and 4-contact inserts with two shunted (N.C.) contacts. Efficient cable clamp and strain relief.

### SL MALE CORD PLUGS

| Part Number | Pins | Pin Arrangements |
|---|---|---|
| SL413M | 3 | 2 |
| SL414M | 4 | 3 |
| SL415M | 5 | 4 |

### SL FEMALE CORD PLUGS

| Part Number | Contacts | Contact Arrangements |
|---|---|---|
| SL412F | 2 | A |
| SL413F | 3 | B |
| SL414F | 4 | C |
| SL415F | 5 | D |

## STRAIN RELIEF SPRING

**Strain Relief Spring**
**Part Number SL05**

◊ Available on special order only; contact Switchcraft for price and delivery.

DIMENSIONS ARE FOR REFERENCE ONLY Inch (mm)



® Registered trademark of Switchcraft, Inc.
Note: Contact your Switchcraft Representative for price and delivery

* Please visit the product pages on our website for the most up-to-date product information

# SLIM-LINE CONNECTORS (continued)

## SL10 RECEPTACLES
**Flange Mount**

SL104F (typical)

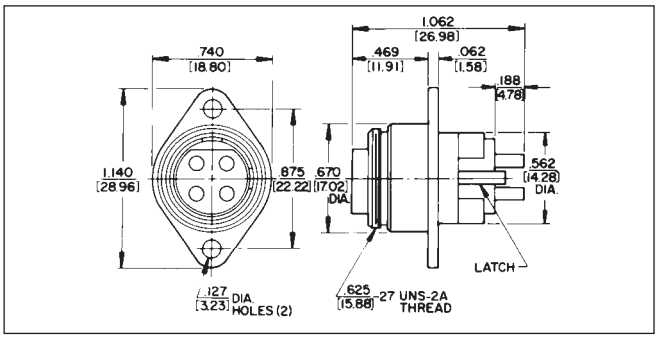


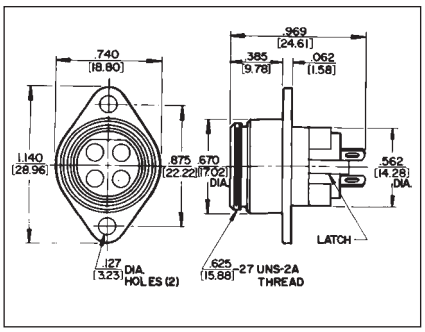


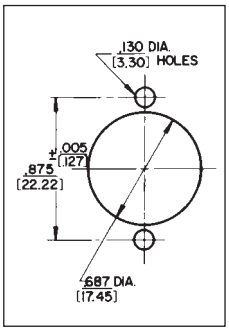


Flange mounted; 2 through 5 pins (male) or 2 through 5 contacts (female). Also 2-, 3- and 4-contact inserts with 2 shunted (N.C.) contacts.

### SL MALE RECEPTACLES

| Part Number | Pins | Pin Arrangements |
|---|---|---|
| SL102M | 2 | 1 |
| SL103M | 3 | 2 |
| SL104M | 4 | 3 |
| SL105M | 5 | 4 |

### SL FEMALE RECEPTACLES

| Part Number | Contacts | Contact Arrangements |
|---|---|---|
| SL102F | 2 | A |
| SL103F | 3 | B |
| SL104F | 4 | C |
| SL105F | 5 | D |

## SL17 RECEPTACLES
**Rear of Panel Mount**

SL175F (typical)

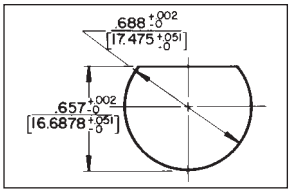


**SL17 and SL18 Receptacles**
**Non-turn panel cut-out**

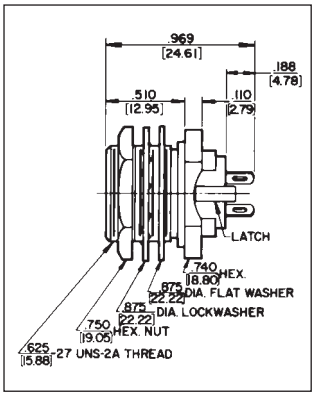


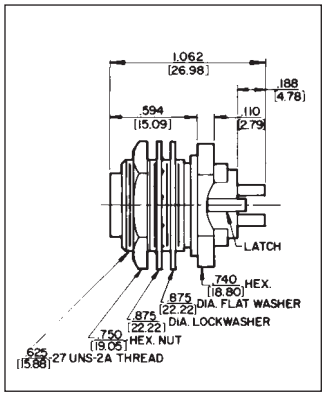


Rear of panel mount; 2 through 5 pins (male) or 2 through 5 contacts (female). Also 2-, 3- and 4-contact inserts with 2 shunted (N.C.) contacts. Mounting locknut **(Part Number SL01)**, lock washer **(Part Number SL02)**, and flat washer **(Part Number SL03)** supplied.

### SL MALE RECEPTACLES

| Part Number | Pins | Pin Arrangements |
|---|---|---|
| SL173M | 3 | 2 |
| SL174M | 4 | 3 |
| SL175M | 5 | 4 |

### SL FEMALE RECEPTACLES

| Part Number | Contacts | Contact Arrangements |
|---|---|---|
| SL172F | 2 | A |
| SL173F | 3 | B |
| SL174F | 4 | C |
| SL175F | 5 | D |

◊ Available on special order only; contact Switchcraft for price and delivery.

DIMENSIONS ARE FOR REFERENCE ONLY Inch (mm)

* Please visit the product pages on our website for the most up-to-date product information



# SLIM-LINE CONNECTORS (continued)

## SL18 RECEPTACLES
**Front of Panel Mount**

**SL183FS (typical)**

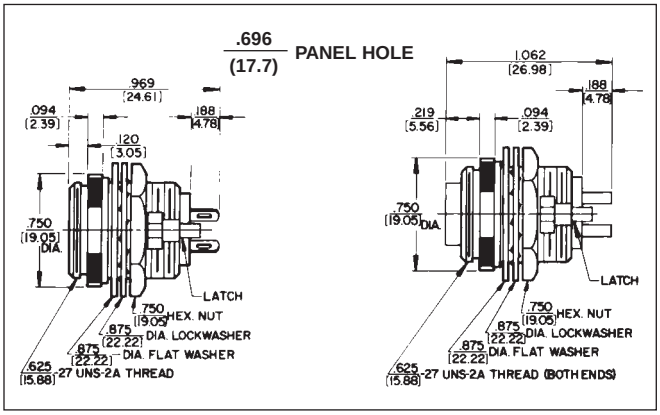


Front of panel mount; 2 through 5 pins (male) or 2 through 5 contacts (female). Also 2-, 3- and 4-contact insert with 3 shunted (N.C.) contacts. Mounting locknut **(Part Number SL01)**, lockwasher **(Part Number SL02)**, and flat washer **(Part Number SL03)** supplied.

## SL MALE RECEPTACLES

| Part Number | Pins | Pin Arrangements |
|---|---|---|
| SL182M | 2 | 1 |
| SL183M | 3 | 2 |
| SL184M | 4 | 3 |
| SL185M | 5 | 4 |

## SL FEMALE RECEPTACLES

| Part Number | Contacts | Contact Arrangements |
|---|---|---|
| SL182F | 2 | A |
| SL183F | 3 | B |
| SL184F | 4 | C |
| SL185F | 5 | D |

## INSTALLING CABLE CLAMP ON INSERT

To install cable clamp on any insert:
1. Position insert approximately as shown in the diagram.
2. Hold clamp at approximately 30° angle (as shown). Place tip of clamp center finger into slot under molded ring “A”. Note position of notch on insert in relation to slot.
3. Press center finger forward into slot and reduce angle of clamp until clamp shoulders seat just ahead of molded barrier on rear of insert “B”.

**Cable Clamp SL04**

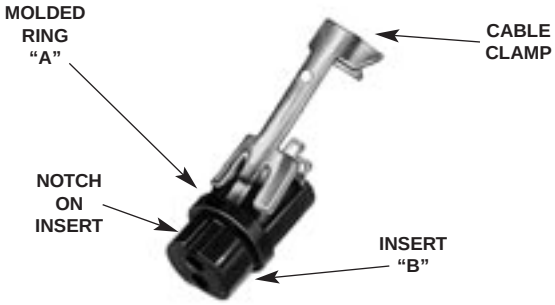


DIMENSIONS ARE FOR REFERENCE ONLY Inch (mm)



® Registered trademark of Switchcraft, Inc.
Note: Contact your Switchcraft Representative for price and delivery

* Please visit the product pages on our website for the most up-to-date product information

## CB CONNECTORS

Miniature 3 and 4 circuit connectors for microphone connections in mobile/communications equipment. Cord plug has silver-plated copper alloy contacts, large cable clamp, and strain relief spring.

**CB-3F** 3-contact female cord plug. Knurled coupling ring has internal metric M16x1 thread. Solder lug terminals accept wires up to #18 AWG. Accommodates cables up to .281" (7.14 mm) diameter.

**CB-4F** Same as CB-3F. except 4 contacts.

CB-3F

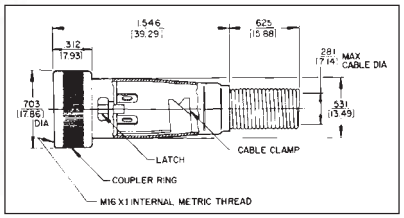


**CB-3M** 3-pin male receptacle. Housing keys insert of mating plug; bushing with external M16x1 metric thread mates with coupling ring on plug. Cup-type terminals accept wires up to #16 AWG. Mounts in .64" (16.26 mm) diameter hole from front of panels up to .125" (3.18 mm) thick, using washer and locknut supplied. Can also be "D"-hole mounted for non-turn mounting (see drawing). Pin diameter. is .093".

**CB-4M** Same as CB-3M, except 4 pin.

| Insert Part No. | Contacts | Dimensions, In. (mm) | |
|---|---|---|---|
| | | Length | Diameter |
| CB3F | 3 | 1.594 (40.49) | .703 (17.86) |
| CB3M | 3 | .781 (19.84) | .705 (19.05) |

CB-3M

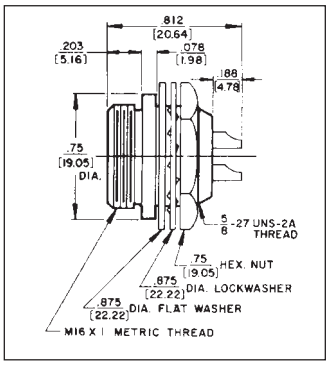


## MICROPHONE CONNECTORS

Connectors with 5/8-27 threads are designed for use with single conductor microphone cable with .281" (7.14 mm) maximum outside diameter. 44 adapts 2501F to fit standard 2-conductor phone jack. Coupling ring on 2501F is removable for fast change from female to male type. Spring assembled into body, cable braid and spring clamped by hollow set screws .281" (7.14 mm) maximum cable diameter. 2501MP mounts in .390" (9.92 mm) diameter hole.

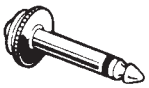

44

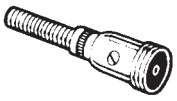

2501M

2501F

2501MP

## MINI-CON MINIATURE CONNECTORS

Approximately 1/2 the size of standard microphone connectors. Ideal for miniature lapel microphones, musical instruments and wherever small cable is used. Accepts single-conductor shielded cable up to .187" (4.76 mm) diameter Coupling ring on 5501F removable for quick change of female to male type. Cable is braid spring clamped to body by hollow point set screw.

| Part Number | Description | Mounting Hole, Inches (mm) |
|---|---|---|
| 5501F | Female Plug | — |
| ◊5501M | Male Plug | — |
| ◊5501MF | Receptacle | .375 (9.52) (Front of panel) |
| 5501MP | Receptacle | .375 (9.52) (Front of panel) |

◊Available on special order; contact Switchcraft for price and delivery.

5501F

5501M

5501MF

5501MP

DIMENSIONS ARE FOR REFERENCE ONLY Inch (mm)

* Please visit the product pages on our website for the most up-to-date product information

# HP75BNC SERIES BNC CONNECTORS

HP75BNC9

Switchcraft Inc. introduces a complete line of true 75 Ohm BNC cable mount connectors. This new series was developed for the broadcast industry, or wherever true 75 Ohm impedance BNC's are used. The HP75BNC Series is available in a wide range of styles, to accommodate the most popular types of coaxial cables. All are crimp terminated using standard crimping tools.

## FEATURES AND BENEFITS

- True 75 Ohm impedance
- Gold-plated center pins for increased life
- Available for a wide range of cable types
- Outstanding electrical performance
- Rugged nickel-plated, machined shells

## SPECIFICATIONS

### Electrical

**Characteristic Impedance:** 75 Ohms
**Voltage Rating:** 500 Volts RMS
**Return Loss:** Less than -25 db at 3 GHz
**Insulation Resistance:** 5000 Megohms min

### MECHANICAL

**Lifecycles:** 500 min
**Center Contact Retention:** 6 lbs. min
**Coupling Mechanism:** 100 lbs. min
**Force to Engage:** 2.5 lbs. max

### ENVIRONMENTAL

**Thermal Shock:** -65° C to 165° C
**Moisture Resistance:** Mil Std 202
**Corrosion:** Mil Std 202
**Flammability:** UL 94-VO
**Vibration:** Mil Std 202
**Solvent Resistance:** Mil Std 202

### FINISH

**Body/Bayonet:** Nickel-plated copper alloy
**Center Conductor:** 50 mi gold-plated copper alloy

## ORDERING INFORMATION

| Part Number | Cable Type |
|---|---|
| **HP75BNC1** | Belden #8241 |
| **HP75BNC2** | Belden #8281B |
| **HP75BNC6** | Belden #1695A |
| **HP75BNC7** | Belden #1694A |
| **HP75BNC9** | Belden #1505A |
| **HP75BNC10** | Belden #1506A |
| **HP75BNC12** | Belden #1855A |

DIMENSIONS ARE FOR REFERENCE ONLY Inch (mm)


® Registered trademark of Switchcraft, Inc.
Note: Contact your Switchcraft Representative for price and delivery

* Please visit the product pages on our website for the most up-to-date product information

## HP75BNC SERIES BNC CONNECTORS (continued)

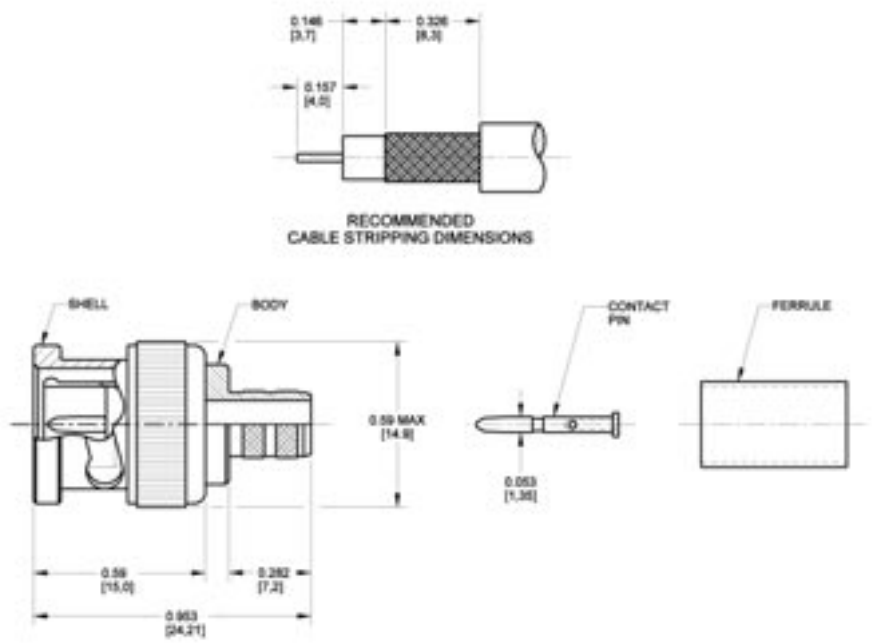


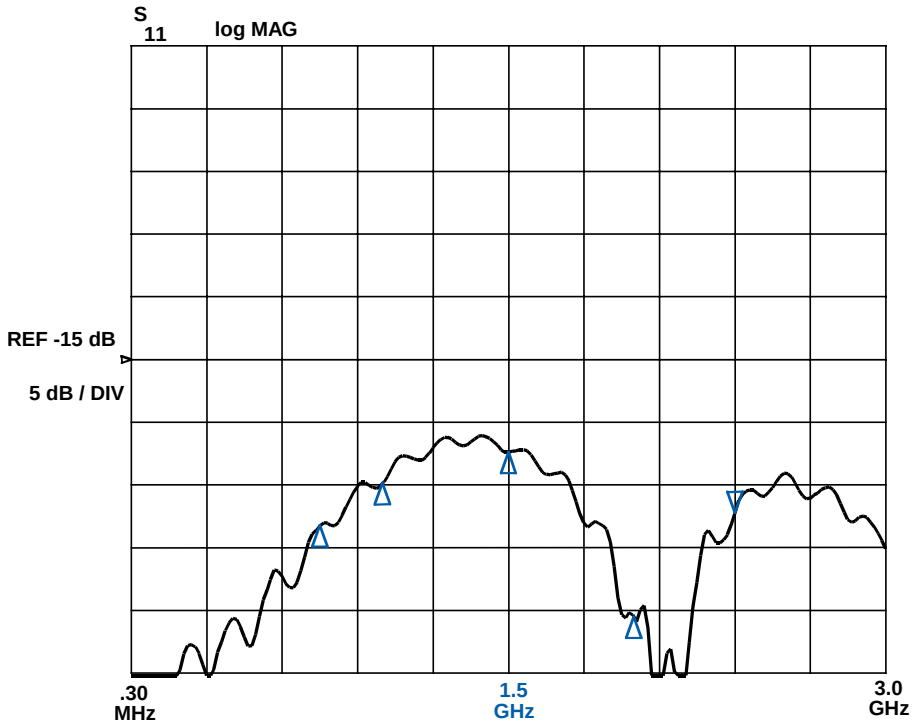


RETURN LOSS

DIMENSIONS ARE FOR REFERENCE ONLY Inch (mm)

* Please visit the product pages on our website for the most up-to-date product information



# EAC RECEPTACLES

## SERIES EAC

Two and three-pin/contact grounding primary power receptacles are designed to meet EN 60 320, as well as applicable UL, CSA, VDE and other specifications. Receptacles feature choice of short, standard or long solder lugs or FASTON ® terminals. Receptacles snap-in or screw mount from the front or rear of panel. Receptacles have orbitally riveted lugs (except EAC233, EAC305, EAC323 EAC325, EAC333, EAC405) for superior mechanical/electrical connections. Extended socket versions permit minimum behind-panel depth.

Receptacles are designed for use in European and domestic instrumentation, power rack mounted devices, test equipment and appliances. Three-pin male receptacles have .125" (3.18 mm) longer center (ground) pin. Ground circuit is established before power circuits “make”, and is maintained until after power circuits “break”.

EAC227

EAC311

EAC305

EAC323

EAC309

EAC325

EAC333

EAC333S

DIMENSIONS ARE FOR REFERENCE ONLY Inch (mm)



® Registered trademark of Switchcraft, Inc.
Note: Contact your Switchcraft Representative for price and delivery

* Please visit the product pages on our website for the most up-to-date product information

# EAC RECEPTACLES (continued)

## SERIES EAC

EAC405

### SPECIFICATIONS
### ELECTRICAL

**Insulation Resistance:** 2 million megohms @ 500 V DC.
**Dielectric Strength:** 1500 V (rms).
**Arcing Test:** Meets UL 498 Standard.

### MECHANICAL

**Solderability Standard:** Meets MIL-STD-202, method 208, EIA RS-186-9E.

### ENVIRONMENTAL

**Thermal Range:** -55° C to +65° C (except EAC45x series).
**Salt Spray:** Meets MIL-STD-202, method 101; EIA-RS-186-5E, method 5.

### MATERIAL

**Shell:** EAC307 through EAC327. Black polyester. EAC303, EAC307 through EAC315. UL flammability rating of UL94 V-0, yellow card #E45575.

EAC309 through EAC327, EAC333. Black polyester, UL flammability rating of UL94 V-0, yellow card #E45575.

EAC233, EAC233S, EAC305, EAC325, and EAC333S. Black polycarbonate, UL flammability rating of UL94 V-0, yellow card #E45329.

EAC323, EAC409 through EAC411 Black polycarbonate, UL flammability rating, or equivalent UL94 V-0, yellow card #E33640, or equivalent.

**Pins, Contacts and Terminals:** Plated copper alloy.

◊**EAC227**—2-pin male receptacle with standard solder lug terminals, similar to EAC327.

◊**EAC233**—2-pin, male receptacle with right-angle housing for PC mount. PC terminals project .130" (3.3 mm) to extend through PC board. Rear of panel mount. Two, .136 " (3.45 mm) diameter holes permit fastening to PC board; two additional .136" (3.45 mm) holes are for fastening to panel or chassis, if required.

◊**EAC233S**—Similar to EAC233, but with two, snap-in retainers through mounting flanges for PC mount.

**EAC305**—3-contact female receptacle. Front mount with two, #4 screws or .094" (2.38 mm) diameter rivets (not supplied).

**EAC309**—3-pin male receptacle with standard lug terminals. Mounts from front or rear of panel with two, #5 screws or .125 " (3.18 mm) diameter rivets (not supplied).

**EAC311**—3-pin male receptacle with FASTON® terminals. Mounts from front or rear of panel with two, #5 screws or .125 " (3.18 mm) diameter rivets (not supplied).

◊**EAC315**—3-pin male receptacle with long solder lug terminals. Mounts from front or rear of panel with two, #5 screws or .125" (3.18 mm) diameter rivets (not supplied).

◊**EAC319**—3-pin male receptacle with short solder lug terminals. Mounts from front or rear of panel with two, #5 screws or .125" (3.18 mm) diameter rivets (not supplied).

◊**EAC323**—3-pin male receptacle with short solder lug terminals. Extended socket housing (mounting flange on rear of receptacle) provides more behind panel clearance. Mounts with two, #4 screws or .094" (2.38 mm) diameter rivets (not supplied).

**EAC325**—3-contact female receptacle with short solder lug terminals. Extended housing (mounting flange on rear of receptacle) provides more behind panel depth. Mounts with two, #4 screws or .094" (2.38 mm) diameter rivets (not supplied).

**EAC327**—3-pin male receptacle, similar to EAC319 except with standard solder lugs.

**EAC333**—3-pin, 10A, 250V male receptacle with right-angle housing for PC mount. PC terminal and hole mounting details are the same as for EAC233. Ground pin is integral with ground solder lug on rear of receptacle.

◊**EAC333S**—Similar to EAC333, but with two, snap-in retainers through mounting flanges for PC mount.

◊**EAC405**—3-contact female receptacle with standard solder lug terminals. Snap-in panel mounting.

**EAC409**—3-pin male receptacle with standard solder lug terminals. Snap-in panel mounting.

**EAC411**—3-pin male receptacle with FASTON terminals. Snap-in panel mounting.

**EAC413**—3-pin male receptacle with FASTON terminals on LINE and NEUTRAL and a solder lug on EARTH GROUND. Snap-in panel mounting.

**EAC451**—3-contact female receptacle with straight PC terminals for use in "HOT" applications. Snap-in panel mounting.

**EAC453**—Same as EAC451 except with solder lug terminations.

**EAC455**—Same as EAC451 except with FASTON terminations.

**EAC457**—Same as EAC451 except with FASTON power terminations and solder lug ground termination.

◊ Available on special order only; contact Switchcraft for price and delivery.

DIMENSIONS ARE FOR REFERENCE ONLY Inch (mm)

* Please visit the product pages on our website for the most up-to-date product information



## SERIES EAC (continued)

| Part Number | Pins/ Contacts [1] | Mounting [2] | Terminals | Listings | Ratings | Switchcraft Mating Number [3] | Comments [4] |
|---|---|---|---|---|---|---|---|
| ◊EAC227 | M | Front or Rear | Solder Lug | UL<br>CSA | 15 A, 250 V AC | P2392 | — |
| ◊EAC233 | M | Rear | PC | UL, CSA,<br>VDE | 15 A, 250V AC<br>10 A, 250 V AC | P2392 | Semko, Demko, Nemko, SETI, and SEV Approved |
| ◊EAC233S | M | Rear | PC | UL, CSA,<br>VDE | 15 A, 250 V AC<br>10 A 250 V AC | P2392 | Semko, Demko, Nemko, SETI, and SEV Approved |
| EAC305 | F | Front | Solder Lug | UL & VDE<br>VDE | 15 A, 250 V AC<br>10 A, 250 V AC | — | Semko, and SEV Approved |
| EAC309 | M | Front or Rear | Solder Lug | UL & CSA<br>VDE | 15 A, 250 V AC<br>10 A, 250 V AC | P2392 | Demko, Semko, Nemko, SETI and SEV Approved |
| EAC311 | M | Front or Rear | FASTON | UL & CSA<br>VDE | 15 A, 250 V AC<br>10 A, 250 V AC | P2392 | Semko, Demko, Nemko, SETI and SEV Approved |
| ◊EAC315 | M | Front or Rear | Solder Lug (Long) | UL & CSA<br>VDE | 15 A, 250 V AC<br>10 A, 250 V AC | P2392 | Semko, Demko, Nemko, SETI and SEV Approved |
| ◊EAC319 | M | Front or Rear | Solder Lug (Short) | UL & CSA<br>VDE | 15 A, 250 V AC | P2392 | — |
| ◊EAC323 | M | Front or Rear | Solder Lug (Short) | UL & CSA<br>VDE | 15 A, 250 V AC<br>10 A, 250 V AC | P2392 | Mounting flange on rear<br>Semko, Nemko, SETI Approved |
| EAC325 | F | Rear | Solder Lug (Short) | UL & CSA<br>VDE | 15 A, 250 V AC<br>10 A, 250 V AC | — | Mounting flange on rear |
| EAC327 | M | Front or Rear | Solder Lug | UL & CSA<br>VDE | 15 A, 250 V AC<br>10 A, 250 V AC | P2392 | Demko, Semko, Nemko SETI and SEV Approved |
| EAC333 | M | Rear | PC | UL, & VDE<br>CSA | 15 A, 250 V AC<br>10 A, 250 V AC | P2392 | Semko, Demko, Nemko, SETI, SEV Approved |
| ◊EAC333S | M | Rear | PC | UL & VDE<br>CSA | 15 A, 250 V AC<br>10 A, 250 V AC | P2392 | Semko, Demko, Nemko, SETI, SEV Approved |
| ◊EAC405 [5] | F | Snap-In | Solder Lug | UL & CSA<br>VDE | 15 A, 250 V AC<br>10 A, 250 V AC | — | — |
| EAC409 [5] | M | Snap-In | Solder Lug | UL, & CSA<br>VDE | 15 A, 250 V AC<br>10 A, 250 V AC | P2392 | Demko, Semko, Nemko, SETI and SEV Approved |
| EAC411 [5] | M | Snap-In | FASTON | UL, CSA<br>VDE | 15 A, 250 V AC<br>10 A, 250 V AC | P2392 | Semko, Demko, Nemko, SETI and SEV Approved |
| EAC413 [5] | M | Snap-In | Solder Lug/ FASTON | UL, CSA<br>VDE | 15 A, 250 V AC<br>10 A, 250 V AC | P2392 | Semko, Demko, Nemko, SETI and SEV Approved |
| EAC451[6] | F | Snap-In[6] | PC | UL, & CSA<br>VDE | 15 A, 250 V AC<br>10 A, 250 V AC | — | Rated for use up to 120°C |
| EAC453[6] | F | Snap-In[6] | Solder Lug | UL, & CSA<br>VDE | 15 A, 250 V AC<br>10 A, 250 V AC | — | Rated for use up to 120°C |
| EAC455[6] | F | Snap-In[6] | FASTON | UL, & CSA<br>VDE | 15 A, 250 V AC<br>10 A, 250 V AC | — | Rated for use up to 120°C |
| EAC457[6] | F | Snap-In[6] | Solder Lug/ FASTON | UL, & CSA<br>VDE | 15 A, 250 V AC<br>10 A, 250 V AC | — | Rated for use up to 120°C |

1 M = Male; F = Female.
2 F = Front; R = Rear. See mounting drawings for mounting details.
3 Also mates with Belden and other standard cords.
4 Semko (Sweden), Demko (Denmark), Nemko (Norway), SETI (Finland), SEV (Switzerland).
5 Receptacles are snap-in mount, and can be ordered to accommodate .030, .040, .050 and .060 inch panel thickness. For snug fit in panel or for other specifying assistance, contact Switchcraft.
6 Available only for .050 inch and .060 inch panel thickness
◊ Available on special order only; contact Switchcraft for price and delivery.

UL No. E38829—EAC-309 thru -327 UL No. E65081—EAC-305
CSA Guide 365-E-1, Class 6233, File Card No. LR27474
VDE Certificate of Compliance No. 731 (EAC-305, -325, -405), all others VDE approval No. 3181.

DIMENSIONS ARE FOR REFERENCE ONLY

Inch
(mm)

If you have been using a 15 amp rated Switchcraft EAC connector ending in an even number, you can now buy an identical part number that has a 10 amp European rating in addition to the 15 amp UL and CSA approval. The part number for the new dual rated part is one less than the old part number (eg. EAC310 becomes EAC309, EAC412040 becomes EAC411040, EAC234 becomes EAC233, EAC458050 becomes EAC457050, etc.)



® Registered trademark of Switchcraft, Inc.
Note: Contact your Switchcraft Representative for price and delivery

* Please visit the product pages on our website for the most up-to-date product information

# EAC RECEPTACLES (continued)

## SERIES EAC

**Front Mount**
**EAC227, EAC309, EAC311, EAC315, EAC319, EAC327**

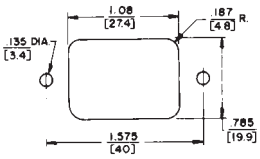


**Front Mount**
**EAC305**
**Figure 2**

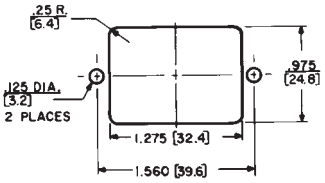


**Rear Mount**
**EAC323**
**Figure 6**

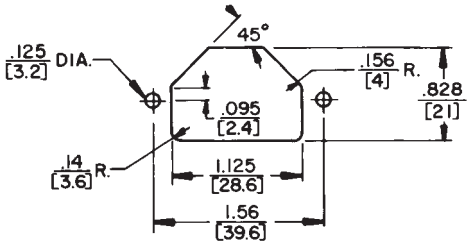


**Front Mount**
**EAC323**
**Figure 4**

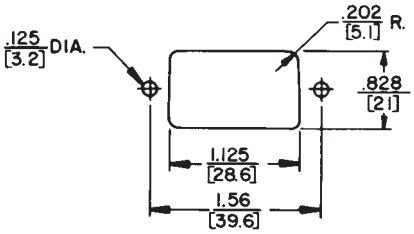


**EAC233, EAC309, EAC311, EAC315, EAC319, EAC327, EAC333**
**Figure 7**

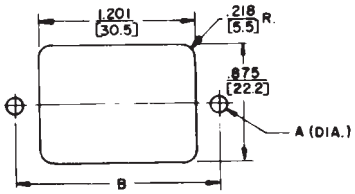


**Front Mount**
**EAC225**
**Figure 5**

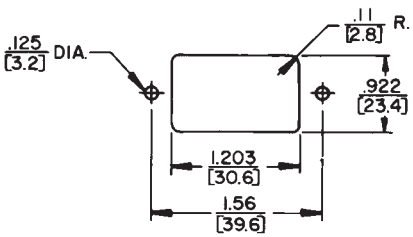


**Rear Mount**
**EAC325**
**Figure 9**

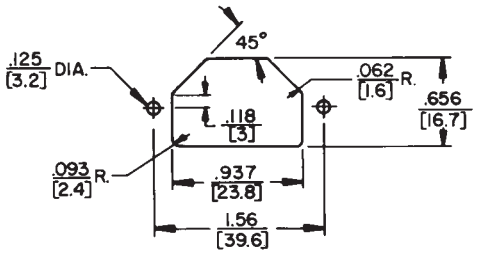


**Snap-in Mount**
**EAC409, EAC411**

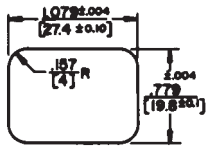


**Snap-in Mount**
**EAC405, EAC451, EAC453, EAC455, EAC457**

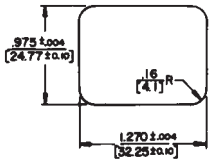


**Recommended**
**PC Board Layout**
**EAC233, EAC333**
**Figure 10**

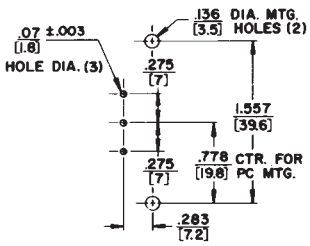


Note: Center .07 inch diameter hole not used for 233, 234

**Note:** Unless otherwise specified, all dimension tolerances are ± .01" (+0.25 mm)

DIMENSIONS ARE FOR REFERENCE ONLY Inch / (mm)

* Please visit the product pages on our website for the most up-to-date product information

# EAC RECEPTACLES (continued)

## SERIES EAC

### EAC227

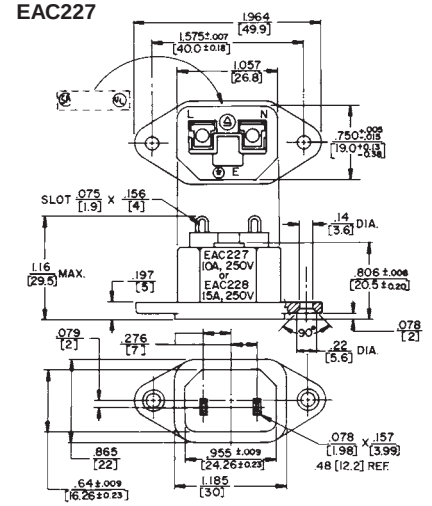


### EAC233S, EAC333S

**Note: Center PIN/Terminals not used on EAC233S**

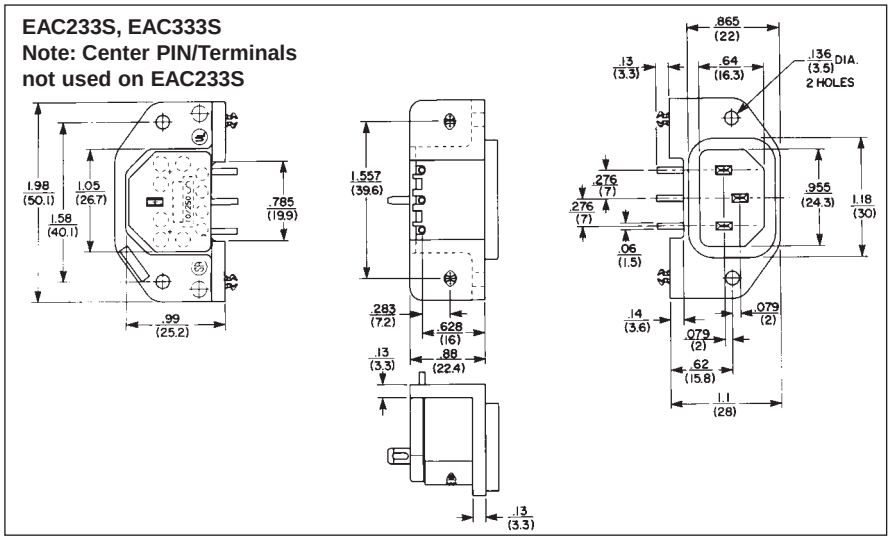


### EAC327

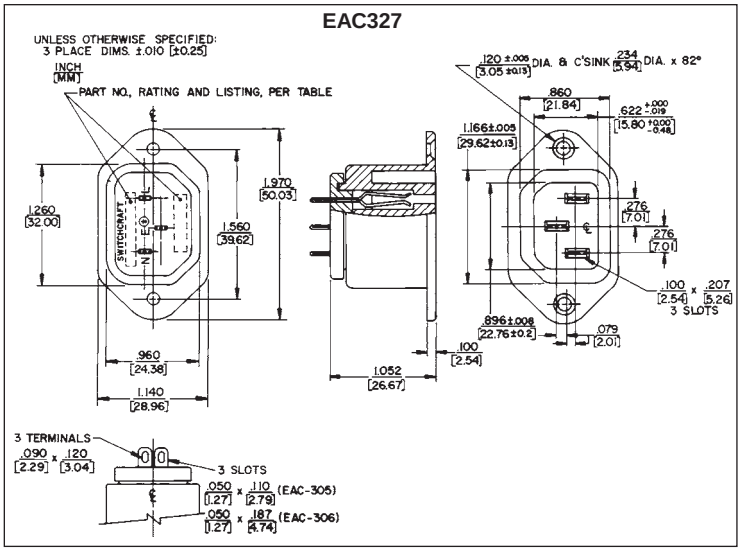


### EAC309, EAC315

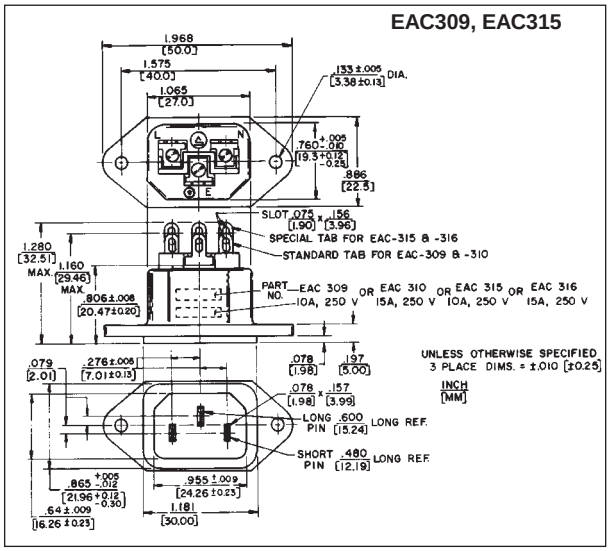


### EAC311

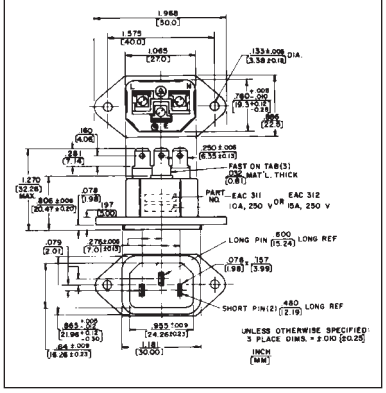


### EAC233, EAC333

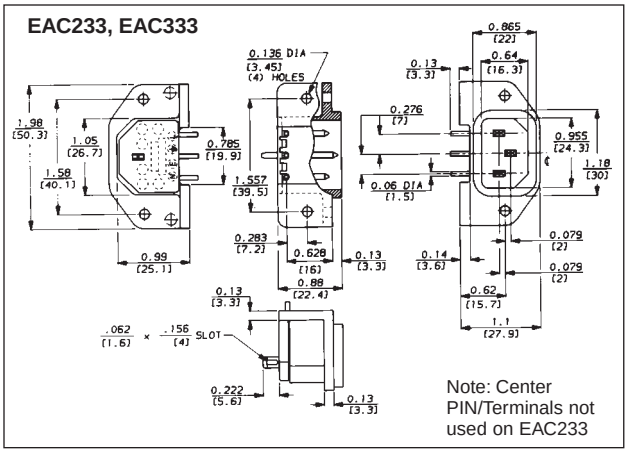


Note: Center PIN/Terminals not used on EAC233

### Chassis/Panel Opening

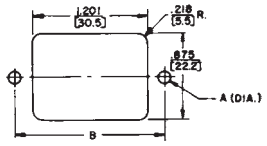


### Recommended PC Board Layout (Component Side)

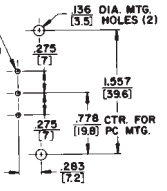


Note: Center .07 inch dia. hole not used on EAC233

**Note:** Unless otherwise specified, all dimension tolerances are ± .01" (+0.25 mm)

DIMENSIONS ARE FOR REFERENCE ONLY Inch / (mm)



® Registered trademark of Switchcraft, Inc.

Note: Contact your Switchcraft Representative for price and delivery

* Please visit the product pages on our website for the most up-to-date product information

# EAC RECEPTACLES (continued)

## SERIES EAC

### EAC319, EAC327

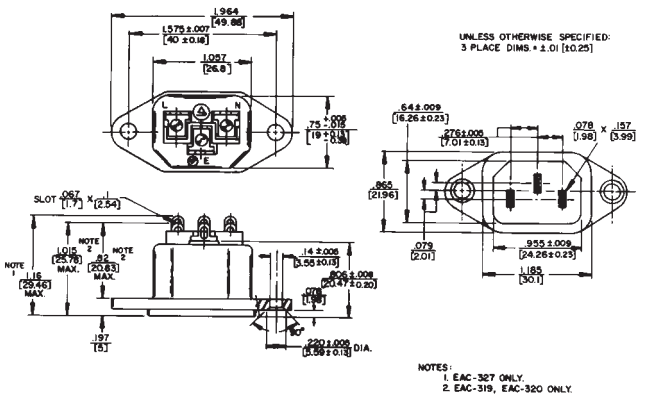


### EAC323

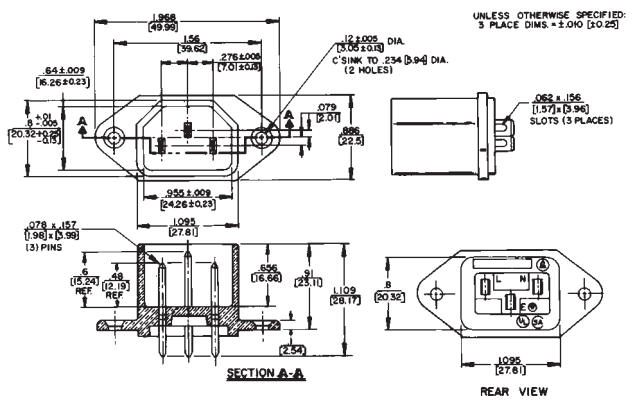


### EAC325

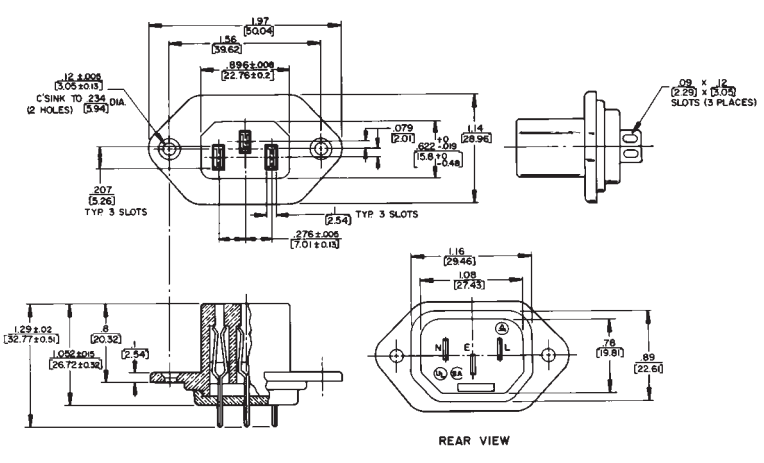


### EAC405

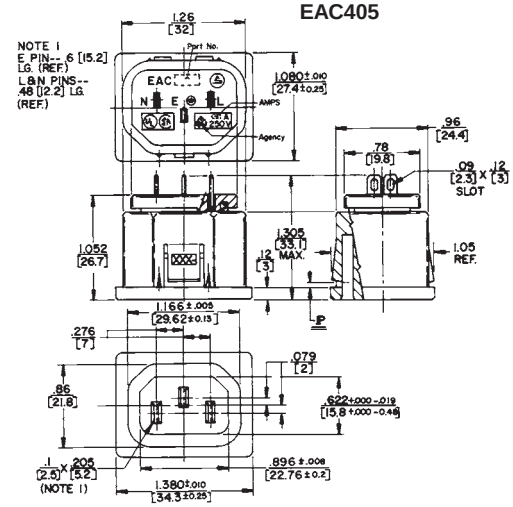

### EAC409

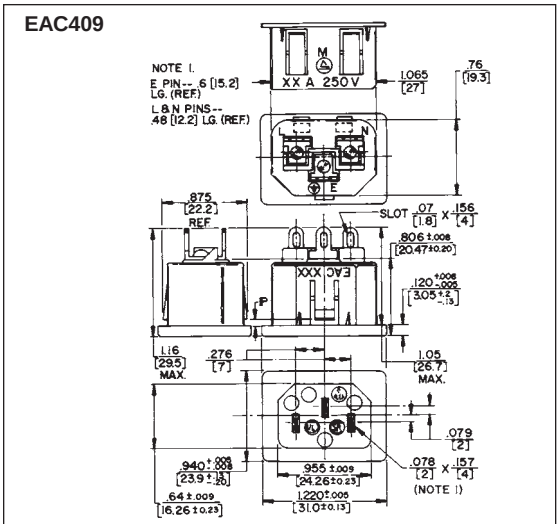

### EAC411

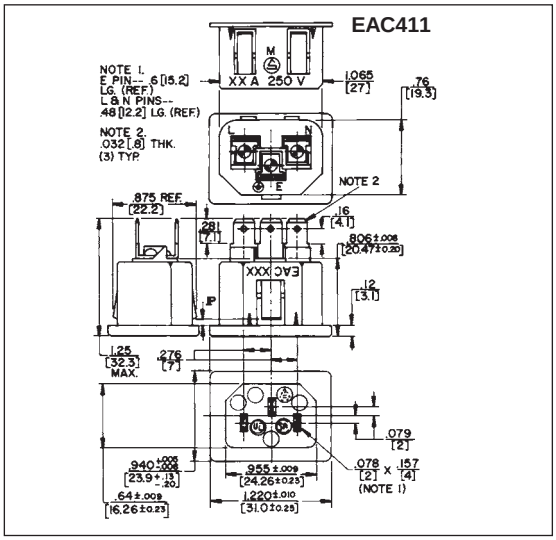

DIMENSIONS ARE FOR REFERENCE ONLY Inch (mm)

* Please visit the product pages on our website for the most up-to-date product information



# EAC RECEPTACLES (continued)

## SERIES EAC

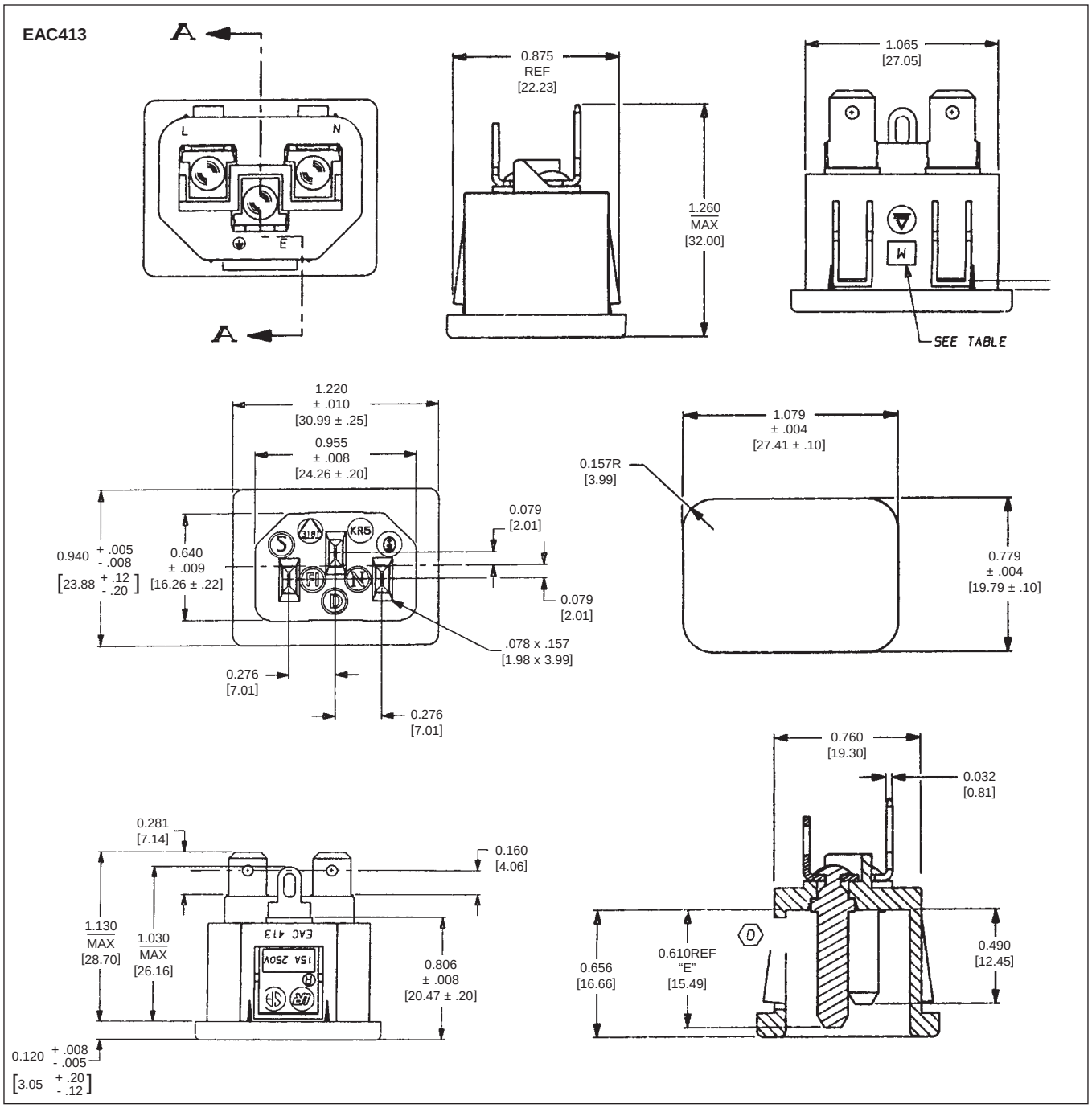


DIMENSIONS ARE FOR REFERENCE ONLY Inch / (mm)



® Registered trademark of Switchcraft, Inc.
Note: Contact your Switchcraft Representative for price and delivery

* Please visit the product pages on our website for the most up-to-date product information

# EAC RECEPTACLES (continued)

## SERIES EAC

**EAC451**

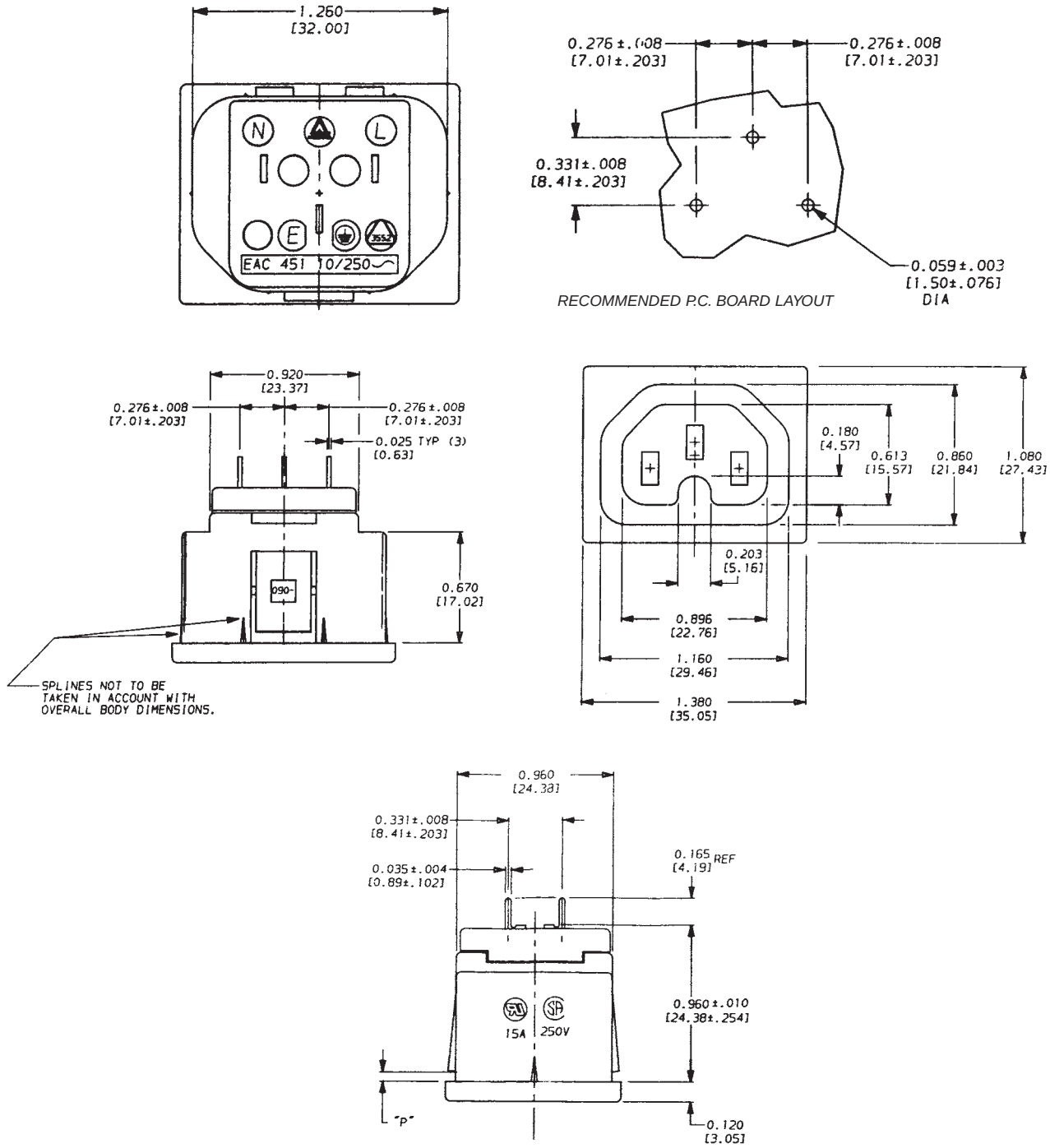


DIMENSIONS ARE FOR REFERENCE ONLY Inch (mm)

* Please visit the product pages on our website for the most up-to-date product information



# EAC RECEPTACLES (continued)

## SERIES EAC

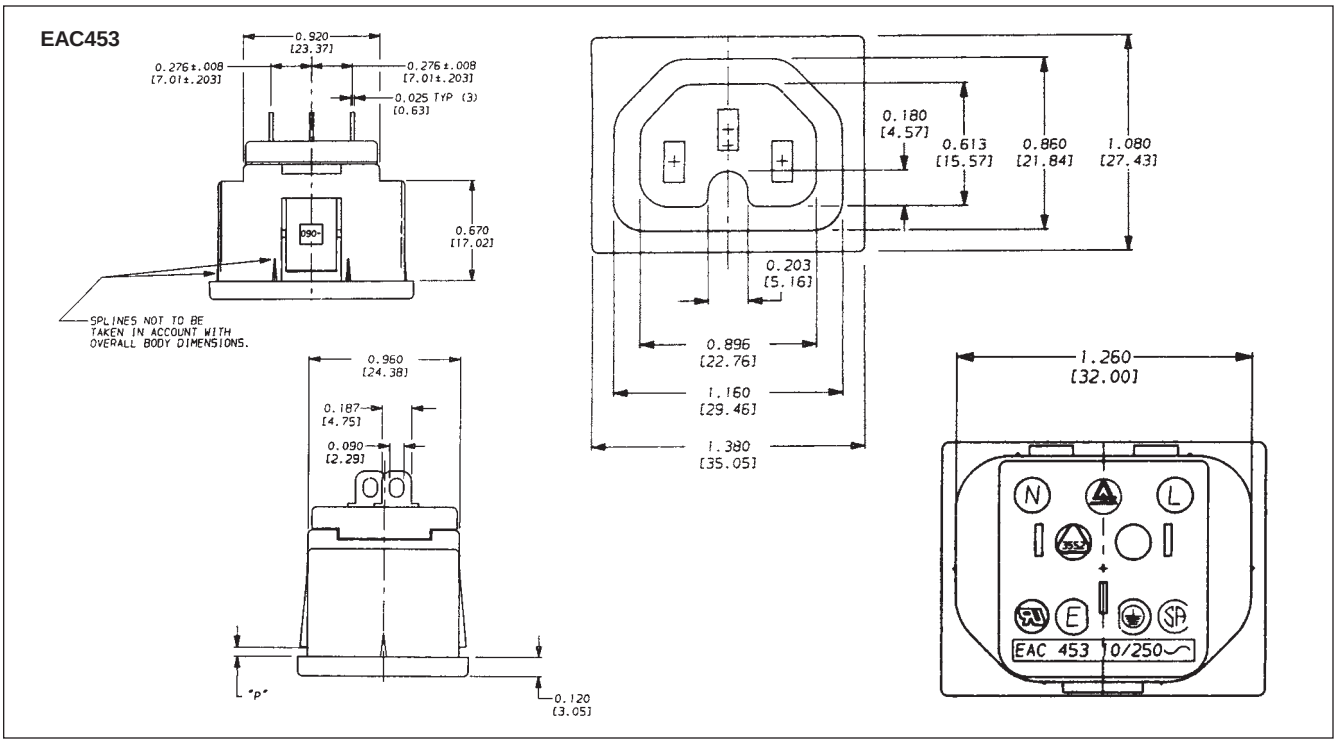


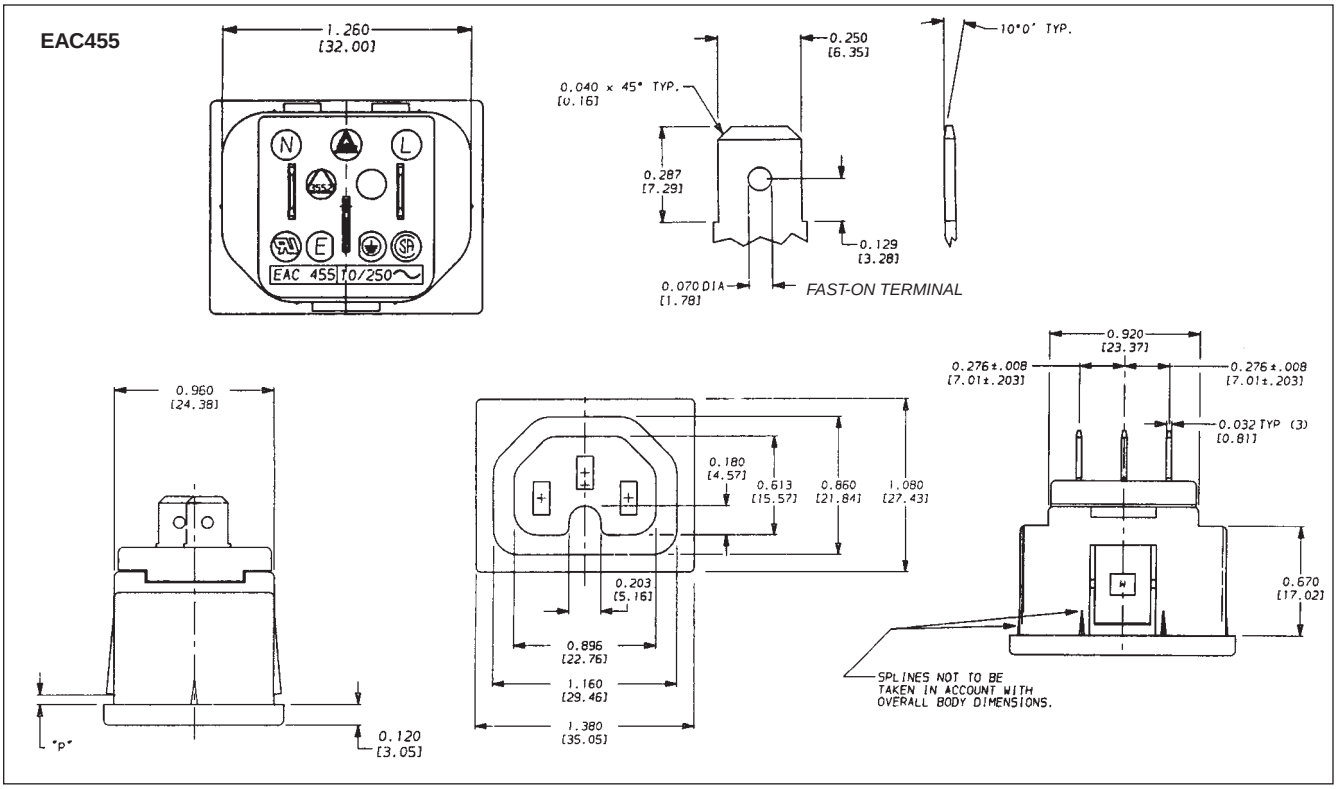


DIMENSIONS ARE FOR REFERENCE ONLY Inch / (mm)



® Registered trademark of Switchcraft, Inc.
Note: Contact your Switchcraft Representative for price and delivery

* Please visit the product pages on our website for the most up-to-date product information

# EAC RECEPTACLES (continued)

## SERIES EAC

**EAC457**

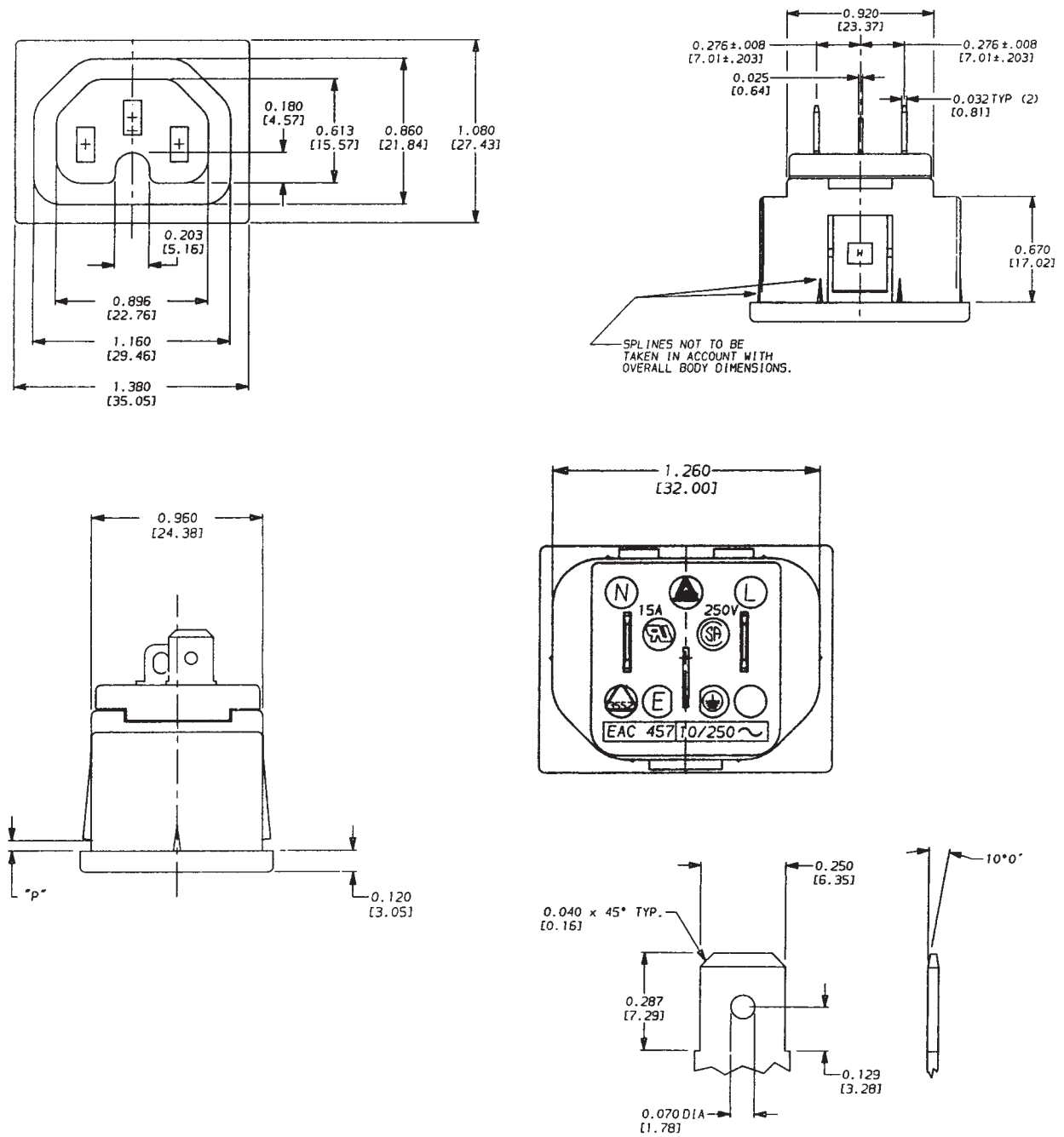


DIMENSIONS ARE FOR REFERENCE ONLY Inch (mm)

* Please visit the product pages on our website for the most up-to-date product information



# RAPC322 POWER INLET SOCKET

Switchcraft introduces the RAPC322, an IEC320 inlet developed as a low power interconnect used in a variety of applications. The RAPC322 is molded from 94-VO rated material, is UL recognized, and meets a wide variety of approvals including CSA and VDE. The RAPC is rated at 2.5A at 250V. Applications for the RAPC322 include notebook computers, medical devices, and data communications products.

## FEATURES AND BENEFITS

- Snap-in feet facilitate wave soldering
- Top and side slots allow chassis to captivate connector
- Conforms to EN 60320-1/2

## APPLICATIONS

- Appliance Inlet
- Personal Computer
- Data Communications
- Medical Equipment
- Test Equipment
- Instrumentation

## SPECIFICATIONS

### GENERAL

**Current Rating:** 5A, UL and CSA 2.5A, VDE and SEMKO
**Nominal Voltage:** 250V
**Temperature Range:** - 55°C to 65°C
**Dielectric Strength:** 2000V @ 1 minute

### MATERIALS

**Housing:** Black, molded thermoplastic, UL 94V-0
**Male Pins:** Copper alloy, nickel plated
**PC Terminals:** Copper alloy, tin plated

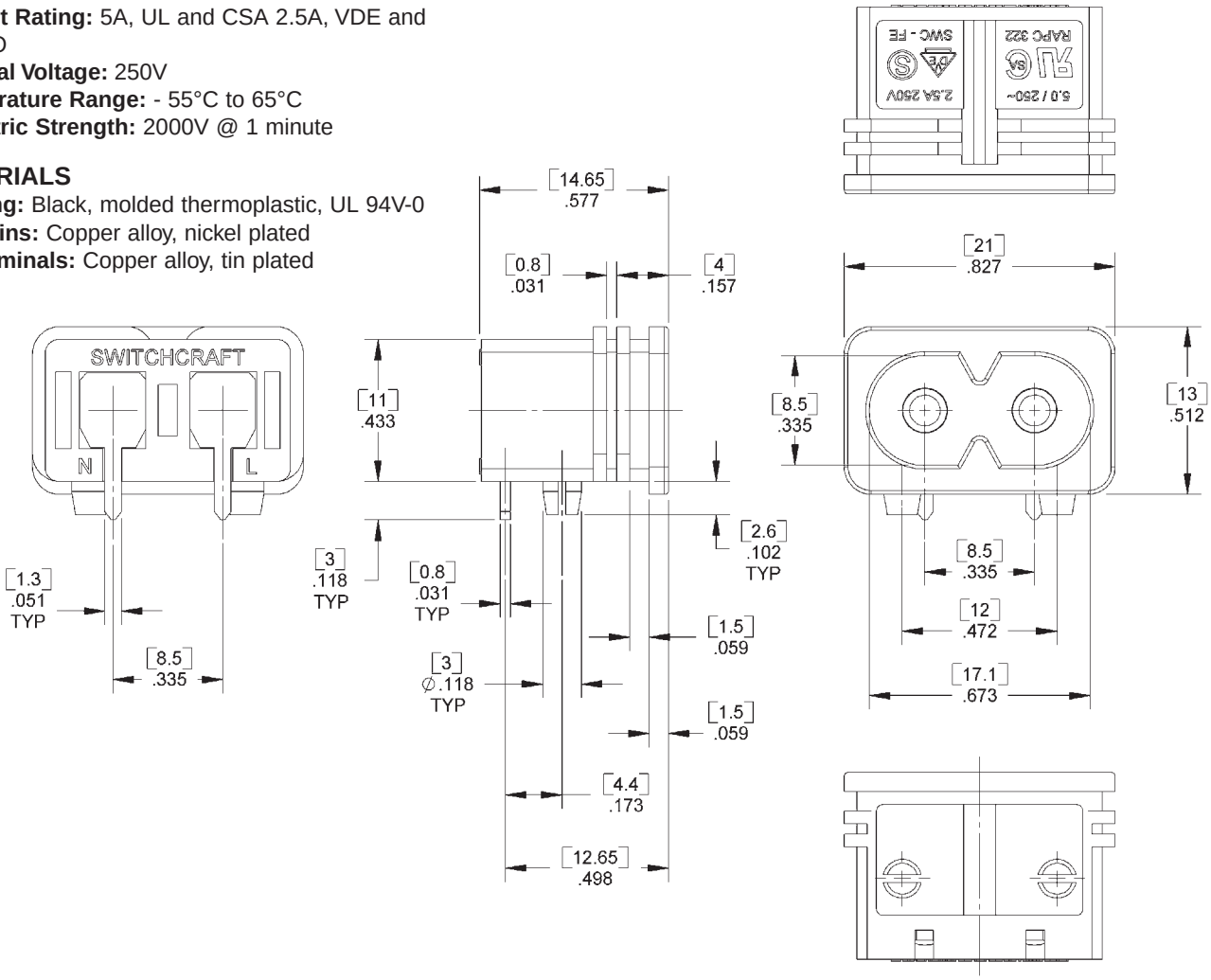


DIMENSIONS ARE FOR REFERENCE ONLY Inch (mm)



® Registered trademark of Switchcraft, Inc.
Note: Contact your Switchcraft Representative for price and delivery

* Please visit the product pages on our website for the most up-to-date product information

# JACK SCHEMATICS

**Circuit Types:** Jacks normally have through circuits, shunt circuits, and/or isolated switching circuits, either individually or in various combinations. The chart below shows schematics of 39 common jacks - many more combinations are possible, but these are the most commonly used. A basic description of the switching action of each jack accompanies each schematic.

**Military Identification:** Military specifications covering phone jacks use a special code to describe jack functions. Jack schematic descriptions are coded J-1 through J-13 (as appropriate) to coincide with Federal Item Identification Guides for Supply Cataloging. One or more groups of suffix numbers/letters identify isolated switching circuits used. Suffixes identify the switching by industry recognized notation, i.e., 1-A, 1-B, 1-C, 1-D, etc. See chart below.

| Notation | Meaning |
|---|---|
| 1-A | One, SPST switching circuit. Also known as NO (normally open) or "make" circuit. |
| 1-B | One, SPST switching circuit. Also known as NC (normally closed) or "break" circuit. |
| 1-C | One, SPDT switching circuit. Also known as transfer or "break" before "make" circuit. |
| 1-D | One, SPDT switching circuit. Also known as "make" before "break" circuit. |

**NOTE:** Number indicates the quantity of circuit - 2-A means 2, A circuits. Terminals locations shown on jack schematics do not necessarily coincide with physical locations on jacks. Not all circuit types available on all jacks.

I

Single open circuit. (J1.)

II

Single closed circuit, sleeve common. (J3).

III

Single closed circuit. (J4).

IV

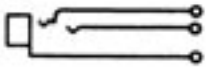

Double open circuit. (J2).

V

Single open circuit. Isolated switching "make" circuit. (J1-1-A).

VI

Transfer circuit. (J5).

VII

Tip closed, ring open. (J10).

VIII

Tip closed, ring open (common to sleeve). (J6).

IX

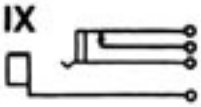

Single open circuit. Isolated switching "break" circuit. (J1-1B).

X

Double closed circuit, ring common to sleeve. (J13).

XI

Single closed. Isolated switching "make" circuit. (J4-1A).

XII

Double closed circuit. (J7).

XIII

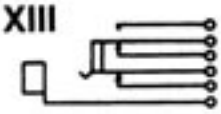

Single closed circuit. Isolated switching transfer circuit. (J4-1C).

XIV

Double closed circuit. Isolated switching "break" circuit. (J7-1B).

XV

Double open circuit. Isolated switching transfer circuit. (J2-1C).

XVI

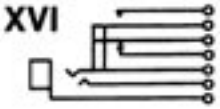

Double open circuit. Isolated switching– separate "break" and make circuits (J2-1A-1B).

XVII

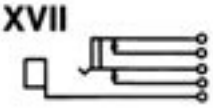

Single closed circuit Isolated switching "break" circuit. (J4-1B).

XVIII

Single closed circuit– "make" before "break". (J8).

XIX

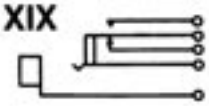

Single open circuit. Isolated switching transfer circuit. (J1-1C).

XX

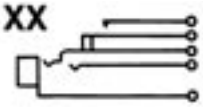

Double open circuit. Isolated switching "make" circuit. (J2-1A).

XXI

Double open circuit. Isolated switching– separate "make" circuits on both tip and ring. (J2-2A).

XXII

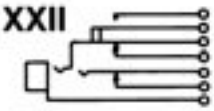

Double closed circuit. Isolated switching "make" circuit on ring spring. (J7-1A).

XXIII

Single closed circuit plus "make" before "break". Isolated switching–"make" before "break" circuit. (J8-1D).

XXIV

Single open circuit. Isolated switching– separate transfer and "make" circuits. (J1-1A-1C).

XXV

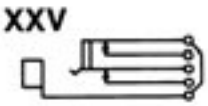

Single closed circuit. Isolated switching "break" circuit. Sleeve common to isolated switching circuit throw. (J4-1B).

DIMENSIONS ARE FOR REFERENCE ONLY Inch (mm)

* Please visit the product pages on our website for the most up-to-date product information

## JACK SCHEMATICS

XXVI

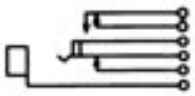

Single closed circuit. Isolated switching–"make" before "break" circuit. (J4-1D).

XXVII

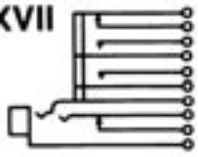

Tip closed; ring open circuits. Isolated switching–two "make" circuits and one "break" circuit. (J10-2A-1B).

XXVIII

Single open (tip) circuit and single closed (ring) circuit. (J9).

XXIX

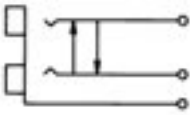

Double jack, 2-conductors on each side. Tip circuits cross shunted; common sleeve. (J12).

XXX

Single open circuit–"make" before "break". (J11).

XXXI

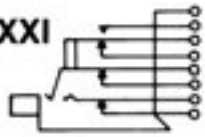

Tip closed; ring closed circuits. Isolated switching–"break" before "make" circuit.

XXXII

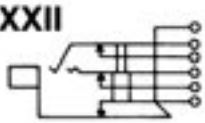

Double closed circuit. Separate sleeve "break" circuit.

XXXIII

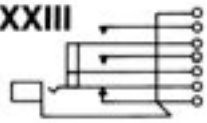

Single closed circuit. Isolated switching–Two "make" circuits.

XXXIV

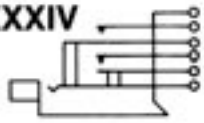

Single open circuit. Isolated switching–Two "make" circuits.

XXXV

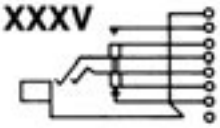

Double open circuit. Isolated switching–One "make" and one "break" circuit.

XXXVI

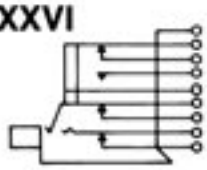

Double closed circuit. Isolated switching–One "make" and one "break" circuit.

XXXVII

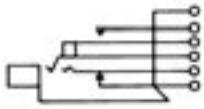

Tip closed; ring open circuits. Isolated switching–One "make" circuit.

XXXVIII

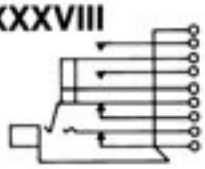

Double closed circuit. Isolated switching–Two "make" circuits.

XXXIX

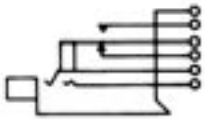

Double open circuit. Isolated switching–"break" before "make" circuit.

## WIRE-WRAPPING TERMINATIONS

Switchcraft can build complete Jack Panel Assemblies with jacks, lamp jacks and switches with wire-wrapping terminals. If desired, components with solder lugs and wire-wrapping terminals can be installed in the same assembly.

### WIRE-WRAPPING TERMINAL DESIGN

Jack springs with integral wire-wrapping terminals are made of special copper alloy for maximum work-life with excellent resistance to corrosion. Shank of terminal accommodates a maximum of three wire connections. Tini-Telephone® phone jacks, lamp jacks and switches with wire-wrapping terminals have slightly higher stack due to greater spacing required for wrapping tool access. Actuator springs and ground lug terminals are .704" long by .060" wide.

### WIRE-WRAPPING CONNECTIONS

Use the chart below as a guide to recommended tools to be used with varying terminal thickness and wire gauges.

| Terminal Thickness (Inches) | Wire Gauge | Recommended Wire-Wrapping Tool (Gardner-Denver Co. Part Numbers) | |
|---|---|---|---|
| | | Use with 14B1-A Wrapping Bit | Wrapping Tool Sleeve |
| .020 thru .032 | 22 & 24 | 500131 | 18840 |
| .016 | 24 | 500131 | 18840 |
| .016 thru .032 | 26 | 37006 | 17611-2 |

**SPECIFYING NOTE:** Due to assembly variations containing components (solder lugs, wire-wrapping terminals, or both), these Jack Panel Assemblies are available on special order only. Contact Switchcraft.

## JACK MATING DATA

**NOTE:** See tables for jack/plug mating data

DIMENSIONS ARE FOR REFERENCE ONLY Inch (mm)



® Registered trademark of Switchcraft, Inc.
Note: Contact your Switchcraft Representative for price and delivery

* Please visit the product pages on our website for the most up-to-date product information

# 1/4" LONG FRAME TELEPHONE JACKS

## JACK MATERIALS

The complete Switchcraft line of standard size panels, jacks, plugs, switches and accessories are rugged, premium quality devices...hand-crafted by experts...100% inspected... and carefully adjusted to meet the traditionally high quality demands of the telephone industry and the military. Tightly controlled incoming inspection, manufacturing methods, and QC procedures assure you of long-life, reliable components. Typical applications where Switchcraft components have been specified for more than five decades are: telephone central office equipment, switchboards, jackfields, test and patch panels, and station equipment; TV and radio broadcasting consoles; PA and communication consoles; telegraph systems and apparatus; multichannel video and audio patching; and data processing equipment, such as computers, telemetry, I/O devices and facsimile.

**FRAMES –** Jack frames are heavy steel, formed and press welded for added strength. Side member adds to frame rigidity and resistance to shock and vibration. Both "A" and "C" type frames can be supplied. (See next page.)

**SPRINGS –** A special copper alloy is used for leaf springs because it offers excellent mechanical and electrical characteristics, and good corrosion resistance. The spring alloy has special hardness and ductility, and springs are produced from custom-designed dies. Although normally adjusted to mate with telephone (and MIL-type) plugs, springs can be adjusted to mate with commercial phone plugs.

**BUSHINGS –** Bushings are copper alloy (except insulated jacks), drilled to accept either a standard (.250" diameter finger) plug or a popular smaller (.206" diameter finger) plug. Series M Hi-D Jax® have a threaded brass bushing, or a molded thermoplastic bushing for insulated mounting.

**CONTACTS –** Jack design includes "wiping" action of contacts for low resistance connections. The contacts supplied depend on the jack selected. Gold or silver plating is normally offered as an option on tip, ring and/or sleeve springs. Several precious metals and shapes are used on jacks.

| Material | Shape | Description |
|---|---|---|
| Palladium | Welded Crossbar | Best overall combination of life, current carrying, and resistance to environment. Also known as WEco #2. |
| Fine silver | Riveted, button-type | Carries higher current than palladium. |
| Gold alloy Crossbar | Welded switching. | Recommended for dry circuit Excellent resistance to corrosion and contamination. Also known as WEco #1. |
| Fine silver (Large) | Riveted, button-type | Heavy currents. |
| Gold or Silver | Plating | For lower contact resistance (used on through circuit springs). |

**SOLDER LUGS TERMINALS –** Lugs project out directly from rear of jack and are solder-coated for easy wiring and soldering. Offset lugs can be supplied on special order (except standard on MT-Jax®). Jacks with offset ground lugs are particularly suitable for bussing connections on jack panels. Contact Switchcraft for special order lug requirements.

STRAIGHT SOLDER LUGS

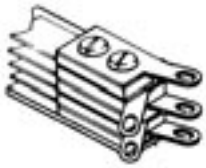

OFFSET SOLDER LUGS

**WIRE-WRAPPING TERMINALS –** Wire-wrapping eliminates the need for soldering. Each terminal accepts up to three wrapped wires (22 or 24 gauge, 5 wraps each), applied with standard wire-wrapping tools. Terminal base has standoff shoulder which prevents first wrapped wire from accidentally sliding down and shorting against another terminal or adjacent spring. Terminal tips are radiused to facilitate positioning of wire-wrapping tool over terminals. See page 80 for wire-wrapping data.

WIRE-WRAPPING TERMINALS

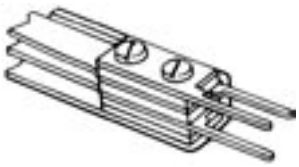

**PRINTED CIRCUIT TERMINALS –** Components can be supplied with printed circuit terminals on special order. Terminals can be specified in various lengths to accommodate different thicknesses of single and double sided boards, as well as multilayers, and flat flexible cable and circuitry.

PRINTED CIRCUIT TERMINALS (SPECIAL)

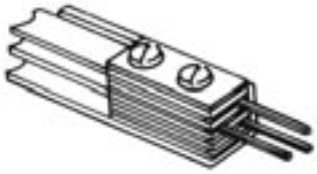

**OTHER TERMINALS –** Many other special terminal styles are possible. For example, where mounting permits, jacks can be supplied with stacks having right-angle terminals. Contact Switchcraft for special terminals.

## CUSTOM COMPONENTS

Only the most popular types of jacks are listed.

DIMENSIONS ARE FOR REFERENCE ONLY Inch (mm)

* Please visit the product pages on our website for the most up-to-date product information

# LONG FRAME TELEPHONE JACKS

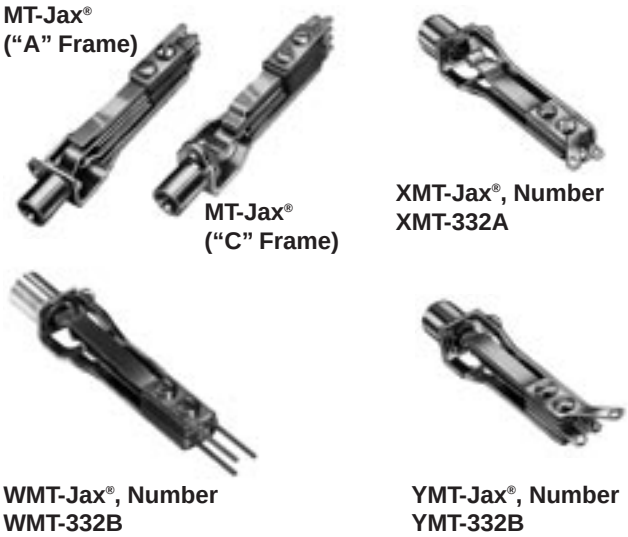


**Details of Typical Buss Wiring of Jacks with Offset Ground Lugs**

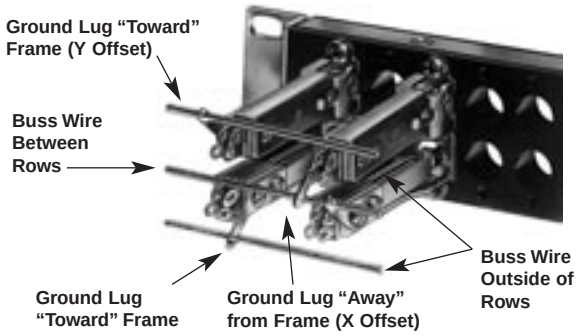


Long frame jacks are designed especially for high quality communication equipment, and to meet exacting MIL specifications, as well as telephone and communication systems. Many jacks have WEco equivalent types. MT-Jax® phone jacks are offered in four styles: MT-Jax®, WMT-Jax®, XMT-Jax® and YMT-Jax®. Rugged steel frames are produced in specially designed dies, press welded to provide rigidity and dimensional stability required by telephone and communication jack panels - and to meet MIL frame strength tests. "A" and "C" frame styles are available.

**TERMINALS –** Solder Lug: All MT-Jax® have solder lug terminals. Wire-Wrapping Terminals: WMT-Jax® have wire-wrapping terminals. Offset Ground Lugs: XMT-Jax® and YMT-Jax® have ground lugs, which simplify production line wiring time. A single row of jacks can be installed with a single buss wire connected to all ground lugs in a row, or when double rows are mounted on .625" vertical centers with lugs oriented between rows, holes in ground lugs line up so a single buss wire provides connections for both rows. XMT-Jax® have ground lugs oriented away and YMT-Jax® are oriented toward jack frame. See illustration.

**MIL STANDARDIZATION –** MIL jack types listed have been adjusted for use with plugs specified in Amendment No. 1, MIL-P-642, usually M642/1-1, M642/1-2, M642/2-1, M642/2-2, M642/4-1 or M642/4-2. When applicable, specify the plug you will use; we will adjust with that plug where the item is not a MIL-type. NOTE: MT-Jax® jacks Numbers ◊MT-342B and ◊MT-344B have shorter bushings, 0.5" long with a hold inside diameter of .21". They will mate with MIL plug M642/5-1 or M642/8-1. M642/5-1 plug (Switchcraft 480) cannot be used with ◊MT-342B or ◊MT-344B if these jacks are mounted on standard .625" thick panels. The short jack bushings are recessed .125", and the M642/5-1 is too wide to fit in the panel recess. Use plug M642/8-1 (Switchcraft 484) with a narrower diameter to fit in the recess and mate properly.

**CONTACTS –** Contacts on shuts and isolated switching circuits are welded crossbar palladium. Welded crossbar gold alloy contacts (WEco #1) are available on special order for dry circuit applications.

## SPECIFICATIONS

**Frame and Stack Screws:** Plated steel, with iridescent iridite finish.
**Springs:** Copper alloy, spring tempered. Solder lugs are tinned.
**Bushings:** Plated copper alloy standard. Natural brass finish optional.
**Insulation:** Rigid plastic spacers (MIL-type PBE-P per Specification LP-513). One piece molded through stack.
**Contacts:** Welded crossbar palladium contacts in shunt and isolated switching circuits are standard. Gold alloy (WEco #1) and fine silver are available on special order.

## MECHANICAL

**Life:** Commercial jacks: 10,000 insertion/withdrawal cycles, minimum. Military Jacks: 20,000 insertion/withdrawal cycles, minimum.
**Mechanical Shock:** Military Jacks – Per MIL-STD-202, method 213, Test Condition H (75g).
**Vibration:** Military Jacks – Per MIL-STD-202, method 213, (10-55 Hz).

## ELECTRICAL

**Contact Resistance:** Commercial Jacks – .030 ohms maximum (initial), .050 ohms maximum (after humidity, durability exposure). Military Jacks – .010 ohms maximum (initial), .020 ohms maximum (after life), .10 ohms maximum (after salt spray).

**Insulation Resistance:** Commercial Jacks – 10,000 MΩ minimum (initial), 1,000 MΩ minimum (after humidity). Military Jacks – 10,000 MΩ minimum (initial), 1,000 MΩ minimum (after humidity, durability exposure).

**Dielectric Withstanding Voltage:** 500 V, 60 Hz (rms) AC.

## ENVIRONMENTAL

**Thermal Range:** Commercial Jacks – -55°C to +85°C (non-operating); -20°C to +65°C (operating). Military Jacks - -55°C to +85°C (non operating); -40°C to +65°C (operating).
**Thermal Shock:** Commercial Jacks – Per MIL-STD-202, method 107. Military Jacks – Per MIL-STD-202, method 107.
**Humidity:** Commercial Jacks – Per MIL-STD-202, method 106. Military Jacks – 0% to 95% operating and non-operating.
**Salt Spray:** Commercial Jacks – Per MIL-STD-202, method 101. Military Jacks – Per MIL-STD-202, method 101 (48 hours).
**Moisture Resistance:** Military Jacks – Per MIL-STD-202, method 106 (240 hours).

**ORDERING –** Order jacks by part number. Additional variations in jacks are available on special order. Special circuitry, frames, contacts, natural brass bushings, as other terminals are available.

DIMENSIONS ARE FOR REFERENCE ONLY Inch (mm)


® Registered trademark of Switchcraft, Inc.
Note: Contact your Switchcraft Representative for price and delivery

* Please visit the product pages on our website for the most up-to-date product information

# 1/4" LONG FRAME TELEPHONE JACKS

## MT-JAX® (with WEco Equivalent Jacks)[2]

| Switchcraft Part Number | WEco Equiv. | MIL Type1 | Sche-matic Circuit* | Dim. "X" maximum Inch (mm) | Mating Plug3 |
|---|---|---|---|---|---|
| 2-CONDUCTOR 2 | | | | | |
| MT331 | 233A, 221E3 | M641/2-8 | I | .438 (11.1) | M642/4-1 M642/4-2 or M642/4-3 |
| ◊CMT331 | 223C | – | I | .438 (11.1) | |
| ◊WMT331 | 223AM | – | I | .438 (11.1) | |
| ◊WCMT331 | 223CM | – | I | .438 (11.1) | |
| ◊MT332 | 232A, 544A4 | – | II | .5 (12.7) | |
| ◊CMT332 | 232C | – | II | .5 (12.7) | |
| MT332A | 218A | M641/2-3 | III | .5 (12.7) | |
| ◊CMT332A | 218C | – | III | .5 (12.7) | |
| ◊MT332C | 303A | M641/2-1 | XVIII | .562 (14.3) | |
| MT333 | 215A | M641/2-6 | V | .469 (11.9) | |
| ◊CMT333 | 215C | – | V | .469 (11.9) | |
| ◊MT333E | 237A | – | IX | .625 (15.9) | |
| ◊CMT333A | 237C | – | IX | .625 (15.9) | |
| MT334A | 225A, 234A | – | XI | .562 (14.3) | |
| ◊CMT334A | 225C, 234C | – | XI | .562 (14.3) | |
| MT334C | 216A | M641/2-5 | XVII | .625 (15.9) | |
| ◊CMT334C | 216C, 484C5 | – | XVII | .625 (15.9) | |
| MT334E | 217A | M641/2-7 | XXV | .562 (14.3) | |
| ◊CMT334E | 217C | – | XXV | .562 (14.3) | |
| ◊MT334F | 226A | M641/2-4 | XIX | .562 (14.3) | |
| ◊CMT334F | 226C | – | XIX | .562 (14.3) | |
| ◊MT335 | 236A | – | XIII | .562 (14.3) | |
| ◊CMT335 | 236C | – | XIII | .562 (14.3) | |
| ◊MT336E[10] | 438A | – | XXIII | .75 (19.0) | |
| CMT336E | 438C | M641/1-2 | XXIII | .75 (19.0) | |
| ◊MT337[10] | 411A | M641/2-9 | XXIV | .75 (19.0) | |
| ◊CMT337 | 411C | M641/1-1 | XXIV | .75 (19.0) | |
| ◊CMT351C | 394C | – | XXXIII | .812 (20.6) | |
| ◊MT352A | 218J | – | III | .5 (12.7) | |
| ◊CMT354F | 361C | – | XXXIV | .75 (19.0) | |

*Refer to page 79 and 80 for schematics.

◊ Special order only; contact Switchcraft.

1. Many jacks are offered with MIL specifications. Other jacks are made of MIL-spec materials but do not have MIL approval because no MIL type numbers have been assigned.
2. MT-Jax have nickel-plated copper alloy bushing. WEco equivalent jacks have plain copper alloy bushings (except WEco Number 221E, which has nickel-plated copper alloy bushing).
3. Mating plugs and patch cords are contained in the catalog.
4. Adjust non-short tip-ring.
5. Adjusted for plug M642/1-1 or M642/1-2.
6. Actuates differently (insulated "A" off ring instead of tip).
7. Same as MIL type M641/2-3 except with offset ground lug.
8. Same as MIL type M641/3-1 except with offset ground lug.
9. Same as MIL type M641/3-2 except with offset ground lug.
10. When mounted on "A" frames, stacks are too high to fit in standard panels with .625" horizontal space add prefix "C" to part number to order jacks with "C" frame.

| Switchcraft Part Number | WEco Equiv. | MIL Type[1] | Sche-matic Circuit* | Dim. "X" maximum Inch (mm) | Mating Plug[3] |
|---|---|---|---|---|---|
| 3-CONDUCTOR | | | | | |
| MT332B | 238A | M641/3-1 | IV | .562 (14.3) | M642/2-1 or M642/2-2 |
| ◊CMT332B | 238C | – | IV | .562 (14.3) | |
| WMT332B | 238AM | – | IV | .562(14.3) | |
| ◊WCMT332B | 238CM | – | IV | .562 (14.3) | |
| MT333B | 300A | – | VII | .562 (14.3) | |
| ◊MT334B | 239A | M641/3-2 | XII | .562 (14.3) | |
| ◊CMT334-B | 239C | – | XII | .562 (14.3) | |
| WMT334B | 239AM | – | XII | .578 (14.7) | |
| ◊WCMT334B | 239CM | – | XII | .578 (14.7) | |
| ◊MT336 | 241A | M641/3-4 | XX | .562 (14.3) | |
| ◊CMT336 | 241C | – | XX | .562 (14.3) | |
| ◊WMT336[10] | 241AM | – | XX | .625 (15.9) | |
| ◊WCMT336 | 241CM | – | XX | .625 (15.9) | |
| ◊MT336A[10] | 242A | M641/5-5 | XIV | .688 (17.5) | |
| ◊CMT336A | 242C | – | XIV | .688 17.5) | |
| ◊WMT336A | 242AM | – | XIV | .75 (19.0) | |
| ◊WCMT336A | 242CM | – | XIV | .75 (19.0) | |
| ◊MT336B[10] | 285A | M641/3-6 | XXI | .812 (20.6) | |
| ◊CMT336B | 285C | – | XXI | .812 (20.6) | |
| MT336C[10] | 240A | M641/3-3 | XXII | .688 (17.5) | |
| ◊CMT336C | 240C | – | XXII | .688 (17.5) | |
| ◊WMT336C[10] | 240AM | – | XXII | .75 (19.0) | |
| ◊WCMT336C | 240CM | – | XXII | .75 (19.0) | |
| ◊MT336D[10] | 280A | – | XXXI | .75 (19.0) | |
| ◊CMT336D | 280C | – | XXXI | .75 (19.0) | |
| ◊WMT336D[10] | 280AM | – | XXXI | .938 (23.8) | |
| ◊WCMT336D | 280CM | – | XXXI | .938 (23.8) | |
| ◊MT338 | 267A | – | XXXII | .562 (14.3) | |
| ◊CMT338 | 267C | – | XXXII | .562 (14.3) | |
| ◊MT339[10] | 284A6 | M641/3-7 | XXVII | .967 (24.6) | |
| ◊CMT339 | 384C6 | – | XXVII | .967 (24.6) | |
| ◊MT342B | 246A | – | IV | .563 (14.3) | M642/5-1 |

## MT-JAX (WITH WECO EQUIVALENT JACKS)[2]

| Switchcraft Part Number | WEco Equiv. | MIL Type[1] | Sche-matic Circuit* | Dim. "X" maximum Inch (mm) | Mating Plug[3] |
|---|---|---|---|---|---|
| 3-CONDUCTOR 2 | | | | | |
| ◊WMT342B | 246 AM | – | IV | .562 (14.3) | M642/5-1 |
| MT344B | 248A | – | XII | .625 (15.9) | |
| ◊MT346 | 249A | – | XX | .562 (14.3) | |
| ◊CMT346 | 249C | – | XX | .562 (14.3) | |
| ◊MT354B | 248E | – | XII | .625 (15.9) | |
| ◊MT355[10] | 243C | – | XXXV | .812 (20.6)10 | M642/5-1 or M642/2-2 |
| ◊MT356C[10] | 245A | – | XXXVI | .938 (23.8)10 | |
| ◊CMT356C | 245C | – | XXXVI | .938 (23.8) | |
| ◊MT357[10] | 363A | – | XXXVII | .75 (19.0)10 | |
| ◊CMT358 | 290C | – | XXXVIII | .875 (22.2) | |
| ◊CMT359 | 326C | – | XXXIX | .75 (19.0) | |

DIMENSIONS ARE FOR REFERENCE ONLY Inch (mm)

* Please visit the product pages on our website for the most up-to-date product information

## MT-JAX®
### (Industry Standard – No WEco Equivalent)

| Switchcraft Part Number | MIL Type[1] | Schematic Circuit* | Dim. "X" maximum Inch (mm) | Mating Plug[3] |
|---|---|---|---|---|
| **2-CONDUCTOR[2]** | | | | |
| ◊**WMT332A** | – | III | .5 (12.7) | M642/4-1 M642/4-2 or M642/4-3 |
| ◊**WCMT332A** | – | III | .5 (12.7) | |
| **XMT332A** | – | III | .5 (12.7) | |
| ◊**YMT332A** | – | III | .5 (12.7) | |
| ◊**CMT332C** | – | XVIII | .562 (14.3) | |
| ◊**WMT332C** | – | XVIII | .5 (12.7) | |
| ◊**WMT333** | – | V | .469 (11.9) | |
| ◊**WCMT333** | – | V | .469 (11.9) | |
| ◊**MT333A** | – | VI | .967 (24.6) | |
| ◊**WMT333E** | – | IX | .625 (15.9) | |
| ◊**WMT334A** | – | XI | .562 (14.3) | |
| ◊**WMT334C** | – | XVII | .562 (14.3) | |
| ◊**WMT334E** | – | XXV | .562 (14.3) | |
| ◊**WMT334F** | – | XIX | .641 (16.3) | |
| ◊**WMT335**[10] | – | XIII | .688 (17.5) | |
| ◊**WCMT335** | – | XIII | .688 (17.5) | |
| **MT335A**[10] | M641/2-2 | XXVI | .75 (19.0) | |
| ◊**CMT335A** | – | XXVI | .75 (19.0) | |
| ◊**WMT335A** | – | XXVI | .75 (19.0) | |
| ◊**WCMT335A** | – | XXVI | .75 (19.0) | |
| ◊**WMT336E**[10] | – | XXIII | .875 (22.2) | |
| ◊**WCMT336E** | – | XXIII | .875 (22.2) | |
| ◊**CMT341** | – | I | .438 (11.1) | |

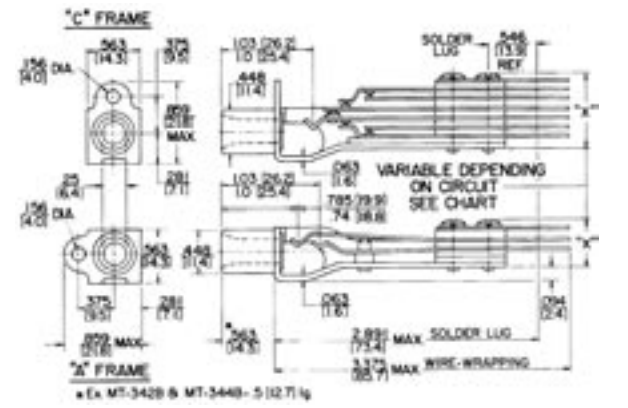


**MT-Jax® and WMT-Jax®**

## MT-JAX®
### (Industry Standard – No WEco Equivalent)

| Switchcraft Part Number | MIL Type[1] | Schematic Circuit* | Dim. "X" maximum Inch (mm) | Mating Plug[3] |
|---|---|---|---|---|
| **3-CONDUCTOR[2]** | | | | |
| **XMT332B** | – | IV | .562 (14.3) | M642/2-1 or M642/2-2 |
| ◊**YMT332B** | – | IV | .562 (14.3) | |
| ◊**CMT333B** | – | VII | .562 (14.3) | |
| ◊**WMT333B** | – | VII | .562 (14.3) | |
| **XMT334B** | – | XII | .562 (14.3) | |
| ◊**YMT334B**[10] | – | XII | .562 (14.3) | |
| ◊**WMT336B** | – | XXI | .812 (20.6) | |
| ◊**WCMT336B** | – | XXI | .812 (20.6) | |
| ◊**MT343B** | – | VII | .5 (12.7) | |
| ◊**CMT342B** | – | IV | .562 (14.3) | M642/5-1 |
| ◊**CMT344B** | – | XII | .625 (15.9) | |
| ◊**WMT344B** | – | XII | .625 (15.9) | |
| ◊**MT346A**[10] | – | XIV | .688 (17.5) | |
| ◊**MT346B**[10] | – | XXI | .812 (20.6) | |
| ◊**MT346C**[10] | – | XXII | .688 (17.5) | M642/5-1 or M642/2-2[1] |
| ◊**CMT346C** | – | XXII | .688 (17.5) | |

*Refer to pages 79 and 80.

◊ Special order only; contact Switchcraft.

1. Many jacks are offered with MIL specifications. Other jacks are made of MIL-spec materials but do not have MIL approval because no MIL type numbers have been assigned.
2. MT-Jax have nickel plated copper alloy bushing. WEco equiv. jacks have plain copper alloy bushings (except WEco No. 221E, which has nickel plated copper alloy bushing).
3. Mating plugs and patch cords are contained in this catalog.
7. Same as MIL type M641/2-3 except with offset ground lug.
8. Same as MIL type M641/3-1 except with offset ground lug.
9. Same as MIL type M641/3-2 except with offset ground lug.
10. When mounted on "A" frames, stacks are too high to fit in standard panes with .625" horizontal space add prefix "C" to part number to order jacks with "C" frame.

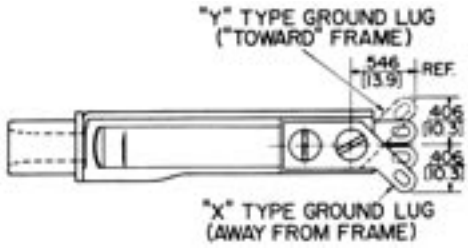


**MT-Jax®, Offset Lugs**

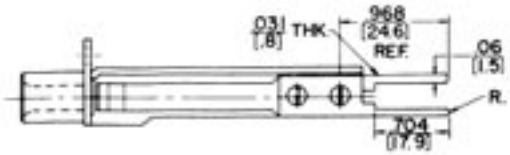


**MT-Jax®,Wire-Wrapping Detail**

DIMENSIONS ARE FOR REFERENCE ONLY Inch (mm)


® Registered trademark of Switchcraft, Inc.
Note: Contact your Switchcraft Representative for price and delivery

* Please visit the product pages on our website for the most up-to-date product information

# 1/4" LONG FRAME TELEPHONE TWIN JACKS

MT389

MT388

WMT389

High quality telephone jacks are essentially doubled versions of MT-Jax®. Twin-Jax® are used in Switchcraft Series 2400, 2600 and JP® Jack Panels and other standard jack panels. Twin-Jax® have direct WEco equivalents.

## MT388 AND WMT388

Frame mounting ears are on 1.375" centers, and bushings are on .625" centers. Jacks are double, 2-conductor type with a crossover wiring feature. If a mating plug is inserted in either bushing, crossover contacts are opened (see schematic). MT388 (solder lugs) is equivalent to WEco jack 410A, 410C and 410D. WMT388 (wire-wrapping) is equivalent to WEco 410AM.

## MT389 AND WMT389

Double, 3-conductor jacks with both the tip and ring circuits interconnected (crossover wired) so if a plug is inserted in either jack, common circuits are opened (see schematic). MT-389 (solder lugs) is equivalent to WEco 482A. WMT389 (wire-wrapping) is equivalent to WEco 482AM and 482BM.

## SPECIFICATIONS

**Frame and Stack Screws:** Steel, plated with iridescent iridite finish.
**Springs:** Copper alloy, spring tempered. Solder lugs are solder coated.
**Bushings:** Nickel-plated copper alloy.
**Contacts:** Welded crossbar palladium in shunt circuits.
**Insulation:** Rigid plastic (MIL-type PBE-P, per MIL Specification LP-513C). Extruded plastic insulating tubing through stack.

## ORDERING

Order by part number from table.

| Part Number[1] | Adjusted for Plug | Dim. "X" max. Inch (mm) |
|---|---|---|
| **MT388** | WEco types 298B and 347B<br>MIL types M642/9-1 and M642/1-1 | .562 (14.3) |
| ◊**WMT388** | Switchcraft types 411, 412, 413, 420 | .562 (14.3) |
| **MT389** | WEco type 310<br>MIL types M642/2-1 and M642/2-2 | .594 (15.1) |
| **WMT389** | Switchcraft types 414 and 482 | .562 (14.3) |

◊ Special Order only; contact Switchcraft.
1. Number MT388 is equivalent to MIL-type M641/11-1
2. Complete data for telephone and MIL-type plugs are contained in this section.
**Mounting Screws:** #6-32, Part Number P10725, can be ordered separately. Contact Switchcraft. (Screws not supplied with jacks).

## SCHEMATIC CIRCUITS

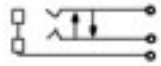

MT388 and WMT388

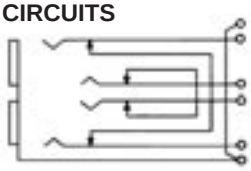

MT389 and WMT389

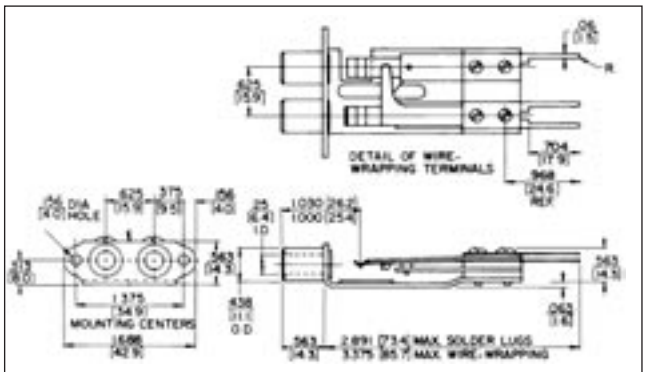


MT388 and WMT388

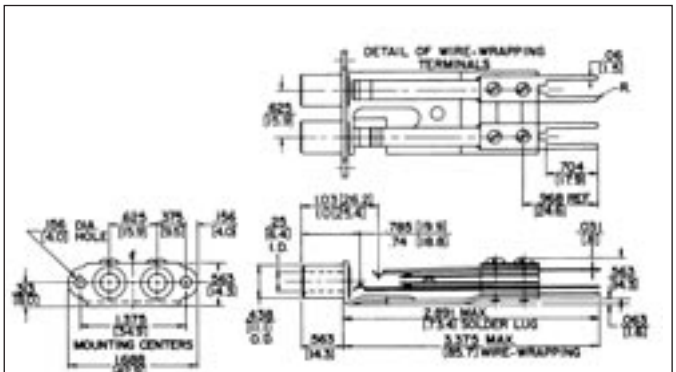


MT389 and WMT389

DIMENSIONS ARE FOR REFERENCE ONLY Inch (mm)

* Please visit the product pages on our website for the most up-to-date product information

# 1/4" JACK BLOCKS

## DUAL-JAX BLOCK®

Dual-Jax Blocks are ideal where limited jack connections are needed but larger jack panels are not required. Designed for broadcasting, intercom and PA systems, switchboards, and commercial, industrial and military communications equipment. Dual-Jax Blocks mount in panels or chassis, either singularly or in multiples. Four countersunk holes accommodate four #8-32 screws (not supplied) for block mounting. Blocks can be supplied without jacks, or with MT-Jax® installed. Many other jacks including, T-Jax®, T-Switch® switches and lamp jacks can be installed. Jacks with wire-wrapping terminals or offset lugs can also be supplied. By drilling additional holes, Twin-Jax® may also be used. Contact Switchcraft for any special order items.

### SPECIFICATIONS

**Block:** Molded black thermoplastic.
**Screws:** #6-20 plated steel, QQ-P-416, Type II, Class 2 (for jack mounting).

### ORDERING

Order by part number from table.

| Part Number | Description |
|---|---|
| **2300** | Block, without jacks. |
| **2331** | Two, MT331 MT-Jax installed. |
| **2332A** | Two, MT332A MT-Jax installed. |
| **2332B** | Two, MT332B MT-Jax installed. |
| ◊**2333** | Two, MT333 MT-Jax installed. |

◊ Special order only; contact Switchcraft for price and delivery.
**Mounting Screws:** #6-20, P1544, can be ordered separately, contact Switchcraft.

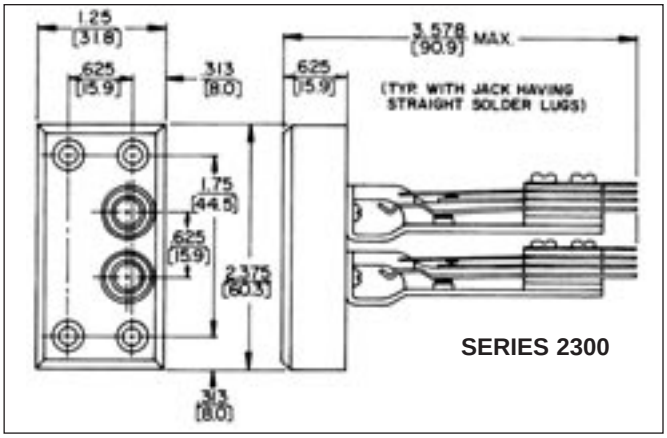


DIMENSIONS ARE FOR REFERENCE ONLY Inch (mm)


® Registered trademark of Switchcraft, Inc.
Note: Contact your Switchcraft Representative for price and delivery

* Please visit the product pages on our website for the most up-to-date product information

# TT-JAX® (.173") TELEPHONE JACKS BANTAM TYPE®

**TT36**
**STEEL FRAME**

**TT32BDC**
**DIE-CAST FRAME**
(special order only)

**TT36FM**
**FRONT MOUNT**

**WTT636C**
**THREADED BUSHING**

## FEATURES

- Steel (standard) or die-cast frames (special order).
- 2-or 3-conductors.
- Palladium crossbar welded contacts are standard in switching circuits. Fine silver or gold alloy contacts are available on special order.
- Series TT30, TT30FM and TT600 - solder lugs; Series WTT-30, WTT30FM and WTT600FM -wire-wrapping terminals. Bussing solder lugs are available on special order.
- Series TT30 and WTT30 jacks mounts in Series 1600, A1600, B1600 and C1600 jacks panels.
- Series TT30FM and WTT30FM jacks mount in Series TT51, TT52, TT55 and TT56 jack panels.
- Series TT600 and WTT600 jacks mount in .25" diameter holes in panels up to .281" thick. Mounting centers: .438".
- Add “N” for nickel-plated frame and “Y” or for offset solder lugs.

## SWITCHCRAFT VS. MIL NUMBERS

| Jack Number | MIL Spec. Number |
|---|---|
| TT32B | 641/19-2 |
| TT32BFM | 641/19-6 |
| TT34B | 641/19-4 |
| TT34BFM | 641/19-8 |
| TT36C | 641/19-10 |
| WTT32B | 641/19-1 |
| WTT32BFM | 641/19-5 |
| WTT34B | 641/19-3 |
| WTT34BFM | 641/19-7 |
| WTT36C | 641/19-9 |

| Part Numbers, Jack with Solder Lugs | | | | | | | | |
|---|---|---|---|---|---|---|---|---|
| Series TT30 | | Series TT30FM | | Series TT600 | | | | |
| Steel | Die Cast | Steel | Die Cast | Steel | Schem.[1] | Dim. “X” Max. In (mm)[2] | Cond. | Typical Mating Plug[3] |
| TT31 | ◊TT31DC | TT31FM | ◊TT31FMDC | TT631 | I | .422 (10.7) | 2 | TT251 |
| TT32A | ◊TT32ADC | TT32AFM | ◊TT32AFMDC | TT632A | III | .406 (10.3) | 2 | TT251 |
| TT32B | ◊TT32BDC | TT32BFM | ◊TT32BFMDC | ◊TT632B | IV | .578 (14.68) | 3 | TT253 |
| TT32C | ◊TT32CDC | ◊TT32CFM | ◊TT32CFMDC | ◊TT632C | XVIII | .422 (10.7) | 2 | TT251 |
| TT33 | ◊TT33DC | TT33FM | ◊TT33FMDC | ◊TT633 | V | .578 (14.7) | 2 | TT251 |
| ◊TT33B | ◊TT33BDC | ◊TT33BFM | ◊TT33BFMDC | ◊TT633B | VII | .484 (12.3) | 3 | TT253 |
| TT34A | ◊TT34ADC | ◊TT34AFM | ◊TT34AFMDC | ◊TT634A | XI | .547 (13.9) | 2 | TT251 |
| TT34B | ◊TT34BDC | TT34BFM | ◊TT34BFMDC | TT634B | XII | .578 (14.68) | 3 | TT253 |
| TT34C | ◊TT34CDC | TT34CFM | ◊TT34CFMDC | ◊TT634C | XVII | .547 (13.9) | 2 | TT251 |
| TT34F | ◊TT34FDC | – | – | – | XIX | .609 (15.5) | 2 | TT251 |
| TT35 | ◊TT35DC | ◊TT35FM | ◊TT35FMDC | ◊TT635 | XIII | .609 (15.5) | 2 | TT251 |
| TT36 | ◊TT36DC | ◊TT36FM | ◊TT36FMDC | ◊TT636 | XX | .609 (15.5) | 3 | TT253 |
| TT36A | ◊TT36ADC | TT36AFM | ◊TT36AFMDC | TT636A | XIV | .625 (15.9) | 3 | TT253 |
| TT36B | ◊TT36BDC | – | – | – | XXI | .703 (17.9) | 3 | TT253 |
| TT36C | ◊TT36CDC | TT36CFM | ◊TT36CFMDC | ◊TT636C | XXII | .625 (15.9) | 3 | TT253 |

| Part Numbers, Jack with Wire Wrapping Terminals | | | | | | | | |
|---|---|---|---|---|---|---|---|---|
| Series WTT30 | | Series WTT30FM | | Series WTT600 | | | | |
| Steel | Die Cast | Steel | Die Cast | Steel | Schem.[1] | Dim. “X” Max. In (mm)[2] | Cond. | Typical Mating Plug[3] |
| WTT31 | ◊WTT31DC | WTT31FM | ◊WTT31FMDC | WTT631 | I | .422 (10.7) | 2 | TT251 |
| WTT32A | ◊WTT32ADC | WTT32AFM | ◊WTT32AFMDC | WTT632A | III | .406 (10.3) | 2 | TT251 |
| WTT32B | ◊WTT32BDC | WTT32BFM | ◊WTT32BFMDC | WTT632B | IV | .578 (14.68) | 3 | TT253 |
| ◊WTT32C | ◊WTT32CDC | ◊WTT32CFM | ◊WTT32CFMDC | ◊WTT632C | XVIII | .422 (10.7) | 2 | TT251 |
| WTT33 | ◊WTT33DC | WTT33FM | ◊WTT33FMDC | ◊WTT633 | V | .578 (14.7) | 2 | TT251 |
| ◊WTT33B | ◊WTT33BDC | ◊WTT33BFM | ◊WTT33BFMDC | ◊WTT633B | VII | .484 (12.3) | 3 | TT253 |
| ◊WTT34A | ◊WTT34ADC | ◊WTT34AFM | ◊WTT34AFMDC | ◊WTT634A | XI | .547 (13.9) | 2 | TT251 |
| WTT34B | ◊WTT34BDC | WTT34BFM | ◊WTT34BFMDC | WTT634B | XII | .578 (14.68) | 3 | TT253 |
| – | – | – | – | ◊WTT634C | XVII | .547 (13.9) | 2 | TT251 |
| ◊WTT35 | ◊WTT35DC | ◊WTT35FM | ◊WTT35FMDC | ◊WTT635 | XIII | .609 (15.5) | 2 | TT251 |
| ◊WTT36 | ◊WTT36DC | ◊WTT36FM | ◊WTT36FMDC | ◊WTT636 | XX | .609 (15.5) | 3 | TT253 |
| ◊WTT36A | ◊WTT36ADC | ◊WTT36AFM | ◊WTT36AFMDC | ◊WTT636A | XIV | .625 (15.9) | 3 | TT253 |
| WTT36C | ◊WTT36CDC | WTT36CFM | ◊WTT36CFMDC | ◊WTT636C | XXII | .625 (15.9) | 3 | TT253 |

◊ Special order only.
1. See schematic diagrams.
2. “X” dimension of die cast frame jacks may be slightly greater.
3. See Mating Plugs Section.

DIMENSIONS ARE FOR REFERENCE ONLY Inch (mm)

* Please visit the product pages on our website for the most up-to-date product information

# TT-JAX® (.173") TELEPHONE JACKS BANTAM TYPE®

## SPECIFICATIONS

**Frame:** Plated (steel or zinc diecast).
**Stack Screws:** Steel plated.
**Bushing:** Plated (brass or steel).
**Tip and Ring Springs:** Copper alloy.
**Contact Spring:** Copper alloy.
**Contacts:** Welded crossbar palladium. Other alloys in various sizes available on special order.
**Insulation:** Rigid plastic with plastic tubing through stack assembly.

## MOUNTING HARDWARE

**Series TT30:** #3-48 x 1/4"; mounting screws, P10834, can be ordered separately.
**Series TT30FM:** Supplied with one #3-48 x 1/4" fil. head machine screw, steel-plated.
**Series TT600:** Supplied with one P1975, nickel-plated copper alloy locknut, and one S3997, steel, nickel-plated washer.

**NOTE:** Dimensional drawings show panels with steel frame jacks. Overall dimensions for steel or die-case frame jacks are the same, except as noted.

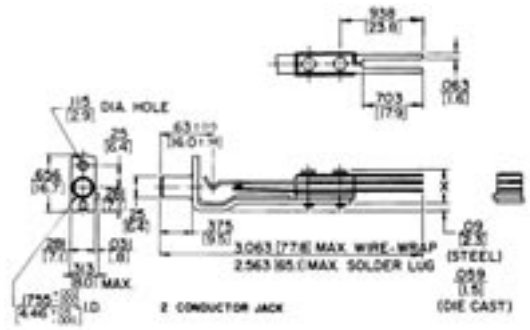


Series TT30 & WTT30
2-Conductor

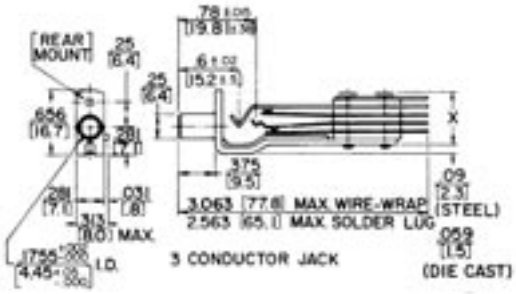


Series TT30 & WTT30
3-Conductor

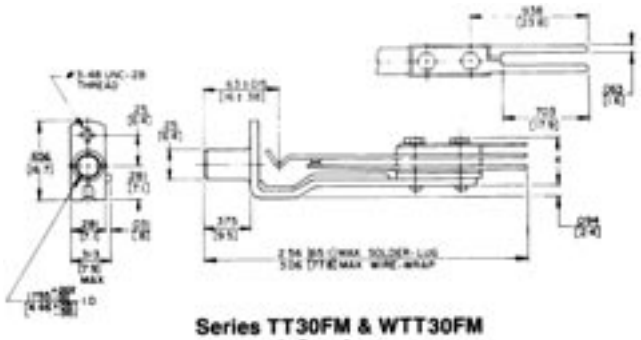

Series TT30FM & WTT30FM
2-Conductor

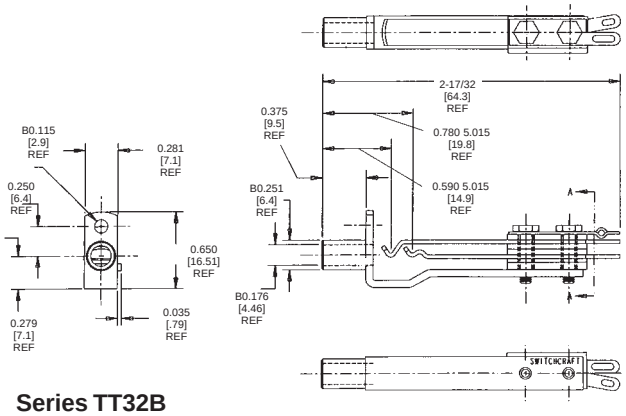


Series TT32B

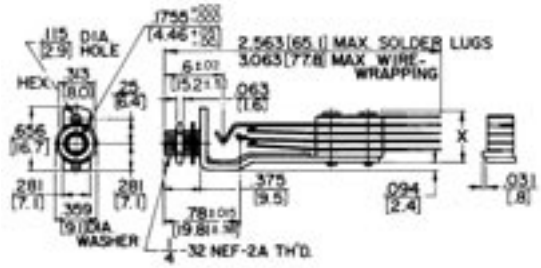


Series TT600 & WTT600
3-Conductor (typ.)

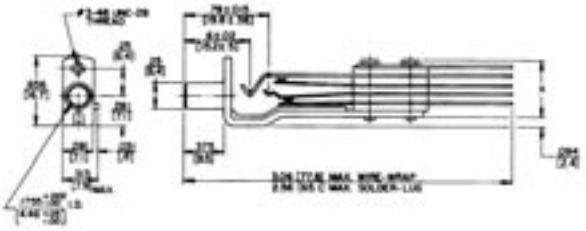

Series TT30FM & WTT30FM
3-Conductor

DIMENSIONS ARE FOR REFERENCE ONLY Inch (mm)


® Registered trademark of Switchcraft, Inc.
Note: Contact your Switchcraft Representative for price and delivery

* Please visit the product pages on our website for the most up-to-date product information

# TT-JAX® (.173") TELEPHONE TWIN JACKS BANTAM TYPE®

## FEATURES

- Steel or die-cast frames. (Special order only).
- Twin, 3-conductor jacks on .312" centers, inter-connected so circuit is opened when a mating plug is inserted in one side of the jack. Palladium welded crossbar contacts are standard in switching circuits.
- Solder lugs or wire-wrapping terminals.
- TT89, TT89C, WTT89 and WTT89DC jacks mount in Series 1700 jack panels.
- TT89FM, TT89FMDC, WTT89FM and WTT89FMDC jacks mount in Series TT59, TT60, TT61 and TT62 jack panels.

## SPECIFICATIONS

**Frame:** Plated (steel or diecast zinc).

**Stack Screws:** Steel-plated.

**Bushing:** Plated (steel or copper alloy).

**Tip, Ring and Contact Springs:** Copper alloy.

**Contacts:** Welded crossbar palladium. Other alloys in various sizes available on special order.

**Insulation:** Rigid plastic with plastic tubing through stack assembly.

**Mounting Hardware:** #3-48 x 1/4" mounting screws, P10834, can be ordered separately for TT89, TT89DC, WTT89 and WTT89DC jacks. Two mounting screws, P25424, are supplied with TT89FM, TT89MDC, WTTFM and WTT89FMDC jacks.

**NOTE:** Dimensional drawings show panels with steel frame jacks. Overall dimensions for steel or die-cast frame jacks are the same.

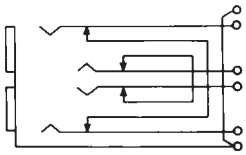

**TT89 SCHEMATIC**

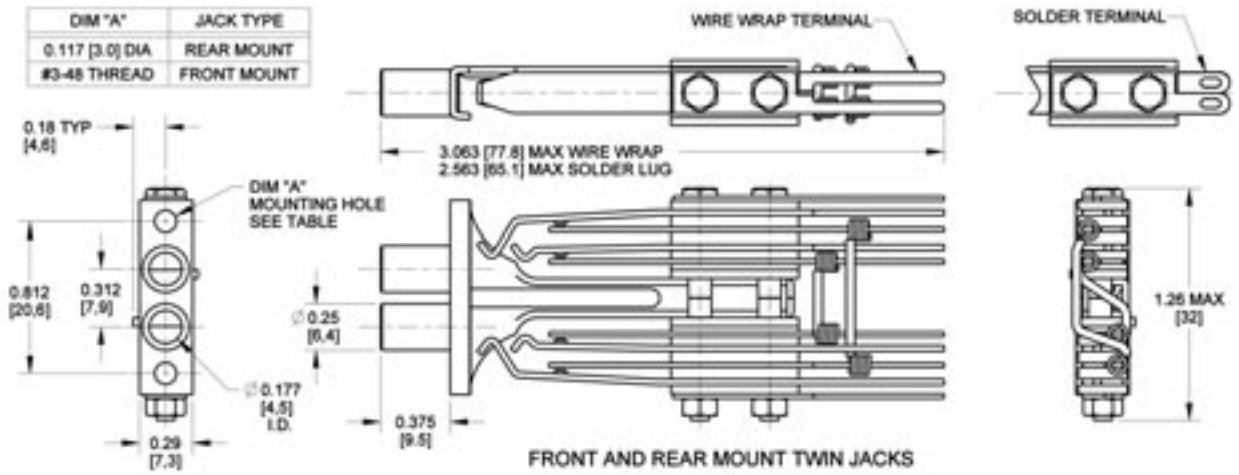


FRONT AND REAR MOUNT TWIN JACKS

| Solder Lugs | | Wire-Wrapping Terminals | | Conductors | Typical Mating Plug[1] |
|---|---|---|---|---|---|
| Steel | Die Cast | Steel | Die Cast | | |
| TT89 | ◊TT89DC | WTT89 | ◊WTT89DC | Twin 3-conductor | TT263 |
| TT89FM | ◊TT89FMDC | WTT89FM | ◊WTT89FMDC | | TT263 |

1. See Mating Plugs Section.
◊ Special order only

DIMENSIONS ARE FOR REFERENCE ONLY Inch (mm)

* Please visit the product pages on our website for the most up-to-date product information

# TT-JAX® (.173") TELEPHONE TRIPLE JACKS BANTAM TYPE®

## FEATURES

- Steel or die-cast frames.
- **TT95 Tri-Jax® Jacks:** three, 3-conductor jacks on one frame. Twin jacks, (on .312" centers, LINE & EQUIPMENT functions), have strapped shunts installed. The third jack (MONITOR) is unwired. See TT95 schematic.
- **TT96 Tri-Jax Jacks:** Same as TT95 jacks, except third jack (MONITOR) has tip and ring springs, respectively, jumpered to tip and ring springs of top (LINE) jack.
- Selection of solder lugs or wire-wrapping terminals.
- Palladium welded crossbar contact are standard in switching circuits.
- TT95, TT95DC, WTT95 and WTT95DC jacks mount in Series B1700 jack panels.
- TT95FM, TT95FMDC, TT96FM, TT96FMDC and wire-wrapping versions mount in Series TT53, TT54, TT57 and TT58 jack panels.

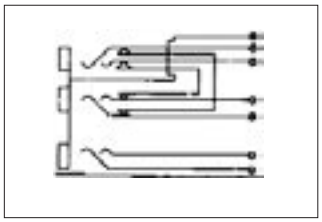

TT95 SCHEMATIC

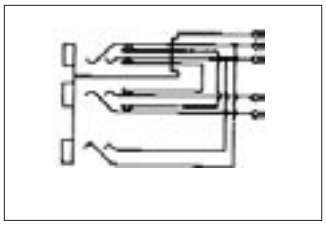

TT96 SCHEMATIC

| Solder Lugs | | Wire-Wrapping Terminals | | Conductors | Schematic | Typical Mating Plug' |
|---|---|---|---|---|---|---|
| Steel | Die Cast | Steel | Die Cast | | | |
| TT95 | ◊TT95DC | WTT95 | ◊WTT95DC | 3 | TT95 | TT253 |
| TT95FM | ◊TT95FMDC | WTT95FM | ◊WTT95FMDC | Plus | TT95 | and |
| TT96FM | ◊TT96FMDC | WTT96FM | ◊WTT96FMDC | Twin-3 | TT96 | TT263 |

◊ Special order only

## SPECIFICATIONS

**Frame:** Plated (steel or diecast)
**Stack Screws:** Stainless Steel Plated.
**Bushings:** Plated (steel or copper alloy).
**Contact Springs:** Copper alloy.
**Contacts:** Welded crossbar palladium. Other precious metal alloys in various sizes available on special order.

**Mounting Hardware:** #3-48 x 1/4" mounting screws, P10834, can be ordered separately for rear mount jacks. Two mounting screws, P25424, are supplied with front mount jacks.

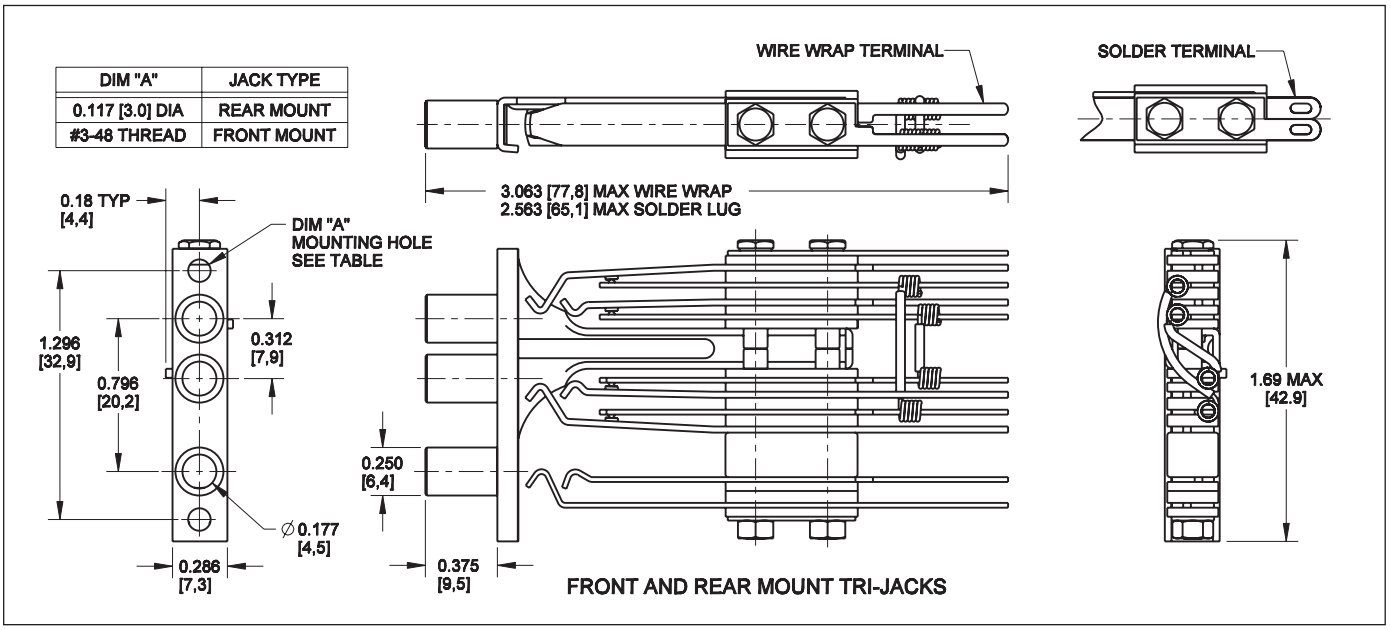


DIMENSIONS ARE FOR REFERENCE ONLY Inch (mm)


® Registered trademark of Switchcraft, Inc.
Note: Contact your Switchcraft Representative for price and delivery

* Please visit the product pages on our website for the most up-to-date product information

# MINIATURE TELEPHONE JACKS, RIGHT ANGLE, PC MOUNT

RTT34B02
COVER P286302

CLOSE-UP OF "Snap-In" TERMINAL

RTT8702
COVER P286402

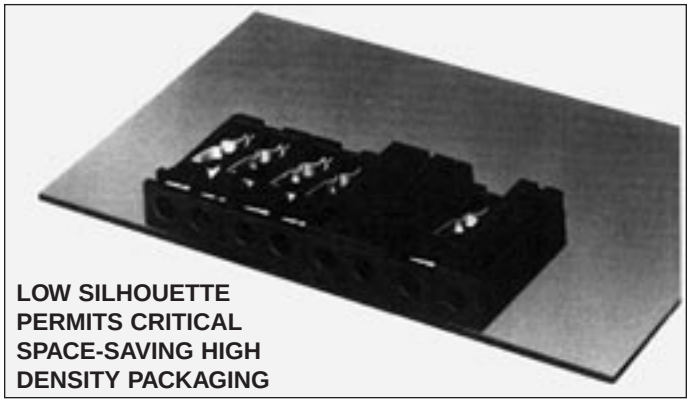

LOW SILHOUETTE PERMITS CRITICAL SPACE-SAVING HIGH DENSITY PACKAGING

Right-angle miniature phone jacks provide low-profile packaging. Single and twin 3-conductor jacks provide plug-jack access to communication circuits for patching and/or testing. Tips and rings are shunted. These jacks mate with Switchcraft miniature TT® plugs and patch cords.

Jacks are designed for right-angle mounting on .062" (1.6 mm) maximum thickness PC boards. Snap-on covers in colors are available and can be installed or removed in the field without special tools. Covers and jacks may be ordered in different colors for color coded circuits.

## SPECIFICATIONS

### ELECTRICAL

**Dielectric Withstanding Voltage:** 500 V AC
**Contact Resistance:** .020 Ω maximum (initial), .030 Ω maximum (after life test).
**Insulation Resistance:** $10^{10}$ Ω at 500 V DC (initial).

### MECHANICAL

**Shock:** MIL-STD 202 Method 213.
**Vibration:** MIL-STD 202 Method 201.
**Insertion Force:** 7 pounds maximum (31.14 N).
**Withdrawal Force:** 1.5 pounds minimum (6.67 N).
**Life:** 10,000 cycles.

### MATERIALS

**Housing:** Thermoplastic UL 94V-0.
**Springs:** Copper alloy, plated.
**Contacts:** Gold alloy (WEco #1) crossbar.

### ENVIRONMENTAL

**Temperature Limits:** -55°C to +85°C (non-operating).
**Thermal Shock:** MIL-STD 202 Method 107.
**Salt Spray:** MIL-STD 202 Method 101.
**Humidity:** MIL-STD 202 Method 106, less steps 7A and 7B.

## ORDERING INFORMATION

| Jack Part No. | Cover Part No. | Color | Schem. | Cond. | Typical Mating Plug[2] |
|---|---|---|---|---|---|
| RTT34B01 | ◊P286301 | Red | XII | 3 | TT-253 |
| RTT34B02 | P286302 | Black | | | |
| RTT34B04 | ◊P286304 | Blue | | | |
| RTT34B05 | P286305 | White | | | |
| ◊RTT34B07 | ◊P286307 | Orange | | | |
| ◊RTT34B08 | ◊P286308 | Yellow | | | |
| RTT8701 | ◊P286401 | Red | Twin XII | Twin 3 | TT-263 |
| RTT8702 | P286402 | Black | | | |
| RTT8704 | ◊P286404 | Blue | | | |
| RTT8705 | P286405 | White | | | |
| ◊RTT8707 | ◊P286407 | Orange | | | |
| ◊RTT8708 | ◊P286408 | Yellow | | | |

1. See schematic diagrams on pages 79 and 80.
2. See Mating Plugs Section.
◊ Special order only; contact Switchcraft for price and delivery.

## ORDERING

1. Order jacks and covers separately from table.
2. Covers can be ordered assembled on special order.
3. To order RTT jack with cover installed, add the letter C after RTT in part number. Special order only.
4. To order RTT jack with Snap-in terminals, add the letter S to the end of the part number. Special order only.
5. For all special orders items, contact Switchcraft.

## RTT JACK PART NUMBERING SYSTEM

| Series | Cover Option | | Circuitry | | Jack Color | |
|---|---|---|---|---|---|---|
| RTT Right Angle TT Jack | Blank- | No Cover Standard | 34B- | XII | 01- | Red |
| | C- | Cover Supplied | 87- | Two XII Circuits | 02- | Black |
| | | | | | 04- | Blue |
| | | | | | 05- | White |
| | | | | | 07- | Orange |
| | | | | | 08- | Yellow |

DIMENSIONS ARE FOR REFERENCE ONLY Inch (mm)

* Please visit the product pages on our website for the most up-to-date product information

## MINIATURE TELEPHONE JACKS, RIGHT ANGLE, PC MOUNT (continued)

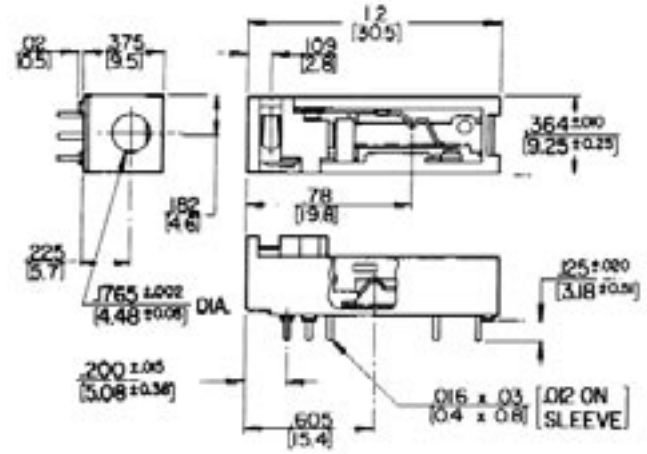


No. RTT34B (Less cover)

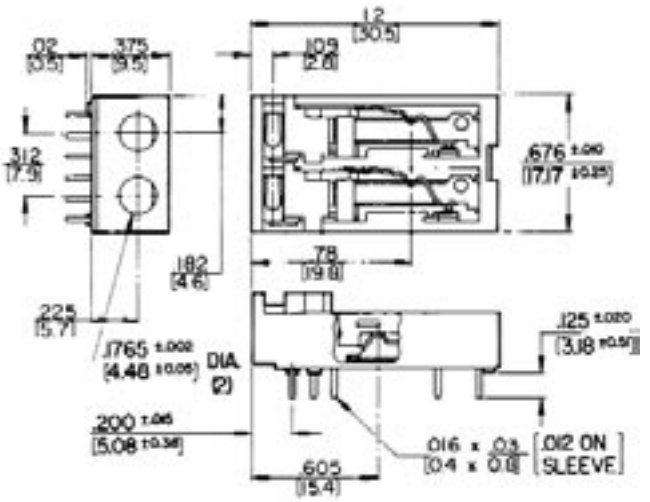


No. RTT87 (Less cover)

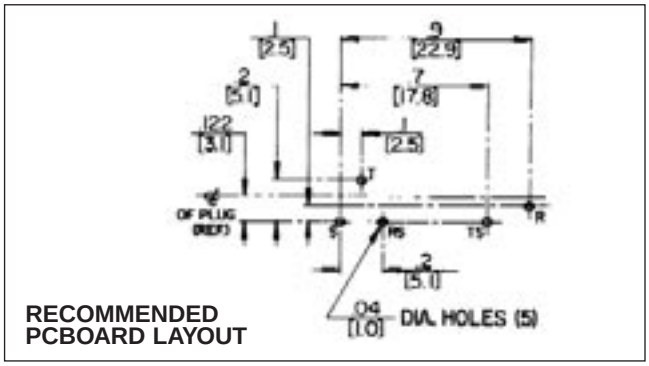


RECOMMENDED
PCBOARD LAYOUT

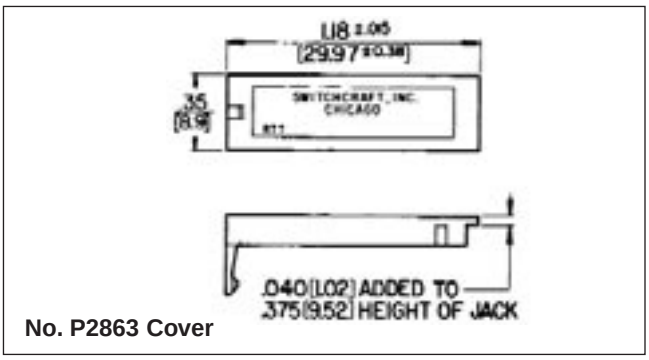


No. P2863 Cover

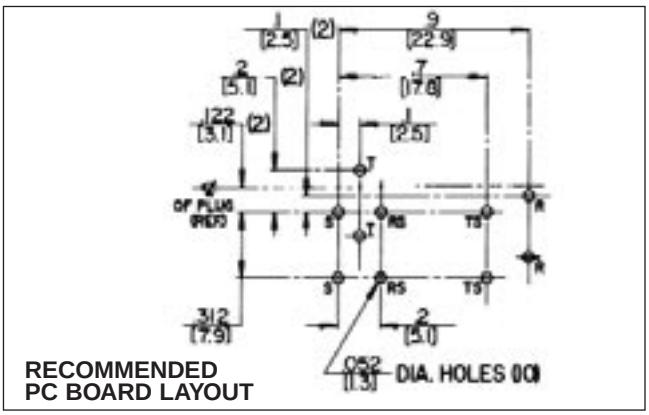


RECOMMENDED
PC BOARD LAYOUT

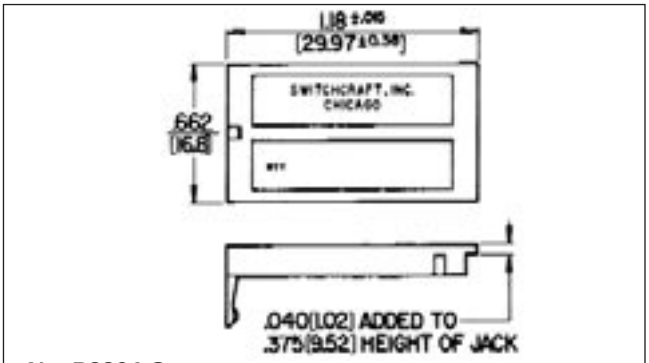


No. P2864 Cover

DIMENSIONS ARE FOR REFERENCE ONLY Inch (mm)



® Registered trademark of Switchcraft, Inc.
Note: Contact your Switchcraft Representative for price and delivery

* Please visit the product pages on our website for the most up-to-date product information

# .177" ENCLOSED JACKS

Two- and 3-conductor Unijax® jacks have advanced features of Hi-D Jax® jacks including chassis/panel and PC mounting and .177" bushing that mates with a variety of tini-telephone® plugs and patchcords. Bushing diameter is .281" inside diameter; panel thickness is .125". Mounts in rows or arrays on .469" centers.

UJ4B

## SPECIFICATIONS

### MECHANICAL

**Insertion/Withdrawal:** 2-conductor, 1.25 pounds nominal, 3 pounds maximum insertion. 3-conductor, 1.5 pounds nominal, 3 pounds maximum insertion. 2-conductor, 3 pounds nominal, 1.5 pounds minimum withdrawal. 3-conductor, 3 pound nominal, 1.5 pounds minimum withdrawal.
**Life:** 10,000 insertion/withdrawal cycles minimum.

### ELECTRICAL

**Contact Resistance:** .10 ohms maximum.
**Insulation Resistance:** 1,000 MΩ minimum.
**Dielectric Withstanding Voltage:** 500 V AC maximum.

### MATERIAL

**Housing:** Thermoplastic.
**Mounting Bushing:** Nickel-plated copper alloy.
**Tip and Ring Springs:** Copper alloy, silver-plated. Integral contacts.
**Shunt Springs:** Copper alloy, silver-plated integral contacts.
**Sleeve Terminal:** Steel, tin-plated.
**Hardware:** Supplied with one, Number P2060 nickel-plated copper alloy locknut, and one, Number P2061 nickel-plated copper alloy washer.

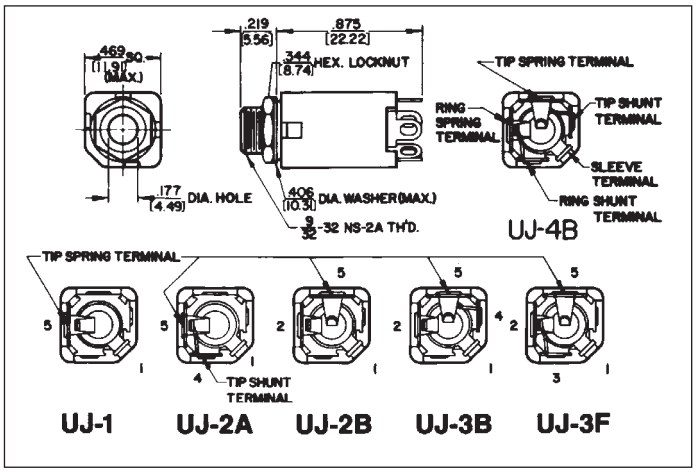


### TWO CONDUCTOR PART NUMBERS

| Part Number | Description | Jack Schematic[1] | Typical Mating Plug[2] |
|---|---|---|---|
| **UJ1** | Open circuit | I | TT251 |
| **UJ2A** | Single closed circuit | III | TT251 |

### THREE CONDUCTOR PART NUMBERS

| | | | |
|---|---|---|---|
| **UJ2B** | Double Open circuit | IV | TT253 |
| **UJ4B** | Double closed circuit | XII | TT253 |

1. See jack schematics on pages 79 and 80.
2. See Mating Plugs Section.

DIMENSIONS ARE FOR REFERENCE ONLY Inch (mm)

* Please visit the product pages on our website for the most up-to-date product information

# 1/4" PHONE JACKS

14B

FAL-11
.205 FASTON
TERMINAL

PC-12A

11

## LITTEL-JAX® COMMERCIAL PHONE JACKS 2- AND 3-CONDUCTOR

Littel-Jax phone jacks mate with standard commercial phone plugs and are available with .25" and .21" inside diameter bushings.

## MIL LITTEL-JAX® PHONE JACKS 2- AND 3-CONDUCTOR MIL-SPEC, MIL-J-641 (E)

MIL jacks mate with MIL-type phone plugs with .25" (6.35mm) or .21" (5.34mm) diameter bushings. Numbers C11 and C12B have a non-turn locating pin which keys the jack to the mounting surface. For low contact resistance applications, jack number C12A has fine silver contacts on shunts and tip springs.

## MOUNTING

**Chassis/Panel:** See Mounting Data drawing below; smallhole is required only for jacks numbers C11 and C12B with non-turn locating pin.
**Maximum Panel Thickness:** .156" (4mm) for standard .276" (7mm) long bushing; .25" (6.35mm) for .375" (9.5mm) long bushing.
**NOTE:** For panels thicker than .25" see Thick Panel Phone Jax.
**Insulated Mount:** See drawing. S1028 flatwasher and **Part Number S1029** shoulder washer must be ordered separately for mounting in .437" diameter hole.
**NOTE:** See Hi-D Jax® for jack specifically designed for insulated mounting without additional washers.
**PC Board Mounting:** See Recommended PC Board Layout drawing below for jacks with PC terminals. Recommended PC board thickness is .062".
**Mounting Centers:** 1.188" (30mm) recommended. Centers may vary with jack selected, for example, Number 11 mounts on .813" (20.6mm) and 14B mounts on 1.125" (28.6mm) minimum centers.

| PREFIX OPTIONS | | SERIES | CIRCUITRY |
|---|---|---|---|
| **Blank-** | 1/4" Commercial Jack | 1-Littel Jax® | 1- I |
| **C-** | Accepts Mill Plug | | 2A- III |
| **FA-** | .205" Faston Terminals | | 2B- IV |
| **FAL-** | .205" Faston Terminals and .375" Long Bushing | | 3- V |
| **L-** | .375" Long Bushing | | 3A- VI |
| **PC-** | PC Terminals | | 3B- VII |
| **S-** | Accepts .206 Diameter Plugs | | 3E- IX |
| | | | 4B- XII |

## TWO CONDUCTOR PART NUMBERS

| Part Number | Description | Jack Schematic[1] | Typical Mating Plug |
|---|---|---|---|
| **11** | Open circuit | I | 250 |
| **C11** | MIL Number M641/6-1 | I | 440 |
| **FA11** | .205 inch FASTON terminal | I | 250 |
| **FAL11** | .375 inch long bushing .205 FASTON terminal | I | 250 |
| **L11** | .375 inch long bushing | I | 250 |
| **12A** | Tip shunt | III | 250 |
| **C12A** | MILNumber M641/12-1 | III | 440 |
| **L12A** | .375 inch long bushing | III | 250 |
| **PC12A** | PC board mount | III | 250 |
| **13** | Isolated “make” circuit | V | 250 |
| **13A** | Transfer circuit | VI | 250 |
| **13E** | Isolated “break” circuit | IX | 250 |

## THREE CONDUCTOR PART NUMBERS

| | | | |
|---|---|---|---|
| **12B** | Double open circuit | IV | 267 |
| **L12B** | .375 inch long bushing | IV | 267 |
| **C12B** | MIL number M641/5-1, .250 inch inside diameter | IV | 480 |
| **13B** | Tip shunt | VII | 267 |
| **14B** | Double closed circuit | XII | 267 |

## PART NUMBERS (.210" INSIDE DIAMETER BUSHING)

| | | | |
|---|---|---|---|
| **S11** | 2 conductor | I | S250 |
| **S12A** | 2 conductor | III | S250 |
| **S12B** | 3 conductor | IV | S267 |
| **S13B** | 3 conductor | VII | S267 |

1. Refer to jack schematics on pages 79 and 80. Other circuits are available; contact factory.

## STEREO JACK CONNECTIONS

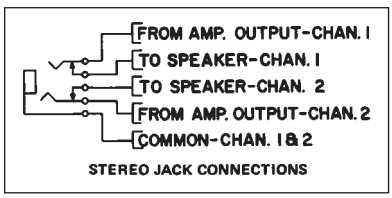


STEREO JACK CONNECTIONS

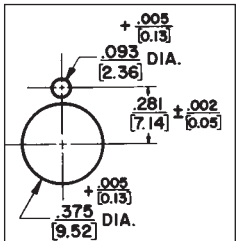


MOUNTING DATA
.093 in. Dia. Hole
Only For Jack With
Locating Pin.

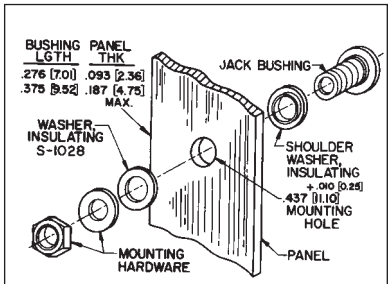


INSULATED MOUNTING

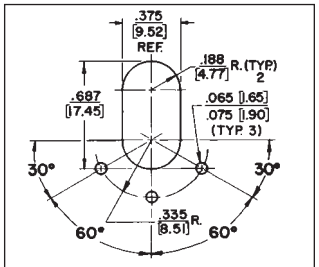


RECOMMENDED PC
BOARD LAYOUT
(Component Side)

DIMENSIONS ARE FOR REFERENCE ONLY Inch (mm)


® Registered trademark of Switchcraft, Inc.
Note: Contact your Switchcraft Representative for price and delivery

* Please visit the product pages on our website for the most up-to-date product information

# 1/4" PHONE JACKS (continued)

## LITTEL-JAX® COMMERCIAL PHONE JACKS - 2- AND 3-CONDUCTOR AND MIL LITTEL-JAX® PHONE JACKS - 2- AND 3-CONDUCTOR MIL-SPEC, MIL-J-641 (E)

### SPECIFICATIONS

### MECHANICAL

**Life:** Commercial Jacks: 10,000 insertion/withdrawal cycles, minimum. Military Jacks: 20,000 insertions/ withdrawals, minimum.
**Mechanical Shock:** Military Jacks: Per MIL-STD 202, method 213, Test Condition H (75g).
**Vibration:** Military Jacks: Per MIL-STD-202, method 213, (10-55 Hz).
**Insertion/Withdrawal Forces:** (see charts below)

### COMMERCIAL JACKS

| Plug Diameter (inches) | .210 | .250 |
|---|---|---|
| Insertion (maximum) | 7 lb. | 7 lb. |
| Withdrawal (minimum) | 1 lb. | 1 lb. |

### MILITARY JACKS

| Part Number | C11 | C12A | C12B |
|---|---|---|---|
| Insertion (maximum) | 6 lb. | 7 lb. | 6 lb. |
| Withdrawal (minimum) | 2 lb. | 3 lb. | 1.5 lb. |
| Withdrawal (maximum) | 7 lb. | 7 lb. | 5 lb. |

### ELECTRICAL

**Contact Resistance:** Commercial Jacks - .030 ohms maximum (initial), .050 ohms maximum (after humidity, durability exposure). Per MIL-STD-202E. Military Jacks - .010 ohms maximum (initial), .020 ohms maximum (after life), .10 ohms maximum (after salt spray).
**Insulation Resistance:** Commercial Jacks - 10,000 MΩ minimum (initial), 1,000 MΩ minimum (after humidity). Military Jacks - 10,000 MΩ minimum (initial), 1,000 MΩ minimum (after humidity, durability exposure).
**Dielectric Withstanding Voltage:** 500 V, 60 Hz (rms) AC.
**Contact Rating:** 1 A, 25 V DC.

### ENVIRONMENTAL

**Thermal Range:** Commercial Jacks; -55°C to +85°C (non-operating); -20°C to +65°C (operating). Military Jacks; -55°C to +85°C (non-operating); -40°C to+65°C (operating).
**Thermal Shock:** Commercial Jacks - Per MIL-STD 202, method 107. Military Jacks - Per MIL-STD 202, method 107.
**Humidity:** Commercial Jacks - Per MIL-STD 202, method 106. Military Jacks - 0% to 95% operating and non-operating.
**Salt Spray:** Commercial Jacks - Per MIL-STD 202, method 101. Military Jacks - Per MIL-STD 202, method 101 (48 hours).
**Moisture Resistance:** Military Jacks - Per MIL-STD 202, method 106 (240 hours).

### MATERIAL

**Mounting Bushing:** Nickel-plated copper alloy.
**Insulation:** Rigid plastic.
**Springs:** Special copper alloy. Integral contacts are standard in the isolated switching circuits; fine silver contacts in C12A switching circuit.

**Sleeve Terminal:** Copper alloy.
**Hardware:** Supplied with one Number **P10001** copper alloy nickel-plated hex nut, and one Number **51022** steel nickel-plated washer - except copper alloy nickel-plated washer Number S10451 supplied on C11, C12A and C12B.
*Commercial jacks feature integral contacts. Integral contacts should not be used where low contact resistance is a requirement.

**Littel Jax® Jacks**

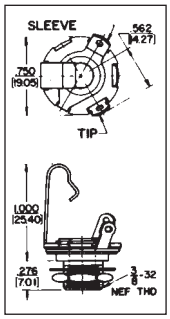

11, L-11, C-11, S-11
*.276" for No. FA-11

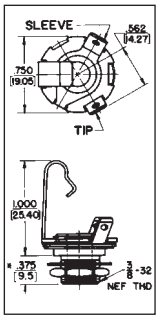

FA-11, FAL-11
S-12A, SC-12A

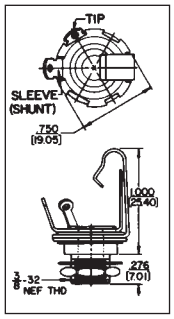

12 12-A, L-12A
S-12A, SC-12A

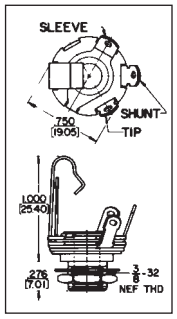

12A, L-12A

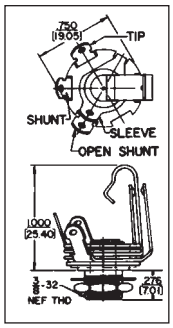

PC-12A

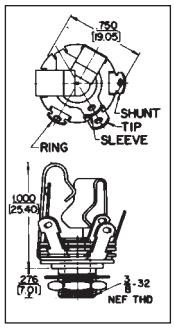

12B, C12B
S-12B, SC-12B

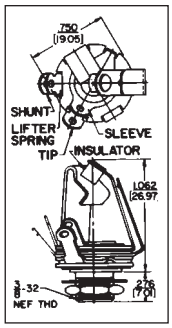

13

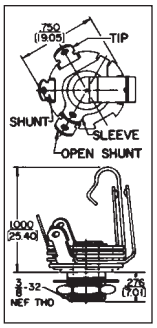

13A

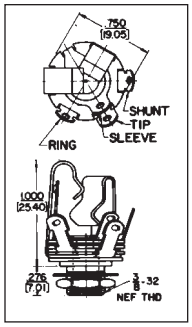

13B, S-13B

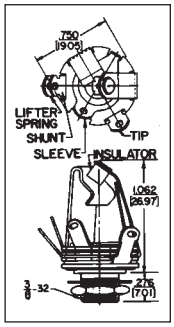

13E

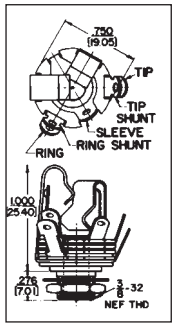

14B

DIMENSIONS ARE FOR REFERENCE ONLY Inch (mm)

* Please visit the product pages on our website for the most up-to-date product information

# 1/4" ENCLOSED TELEPHONE JACKS

Series M11*

Series MNS11*

Series MS11*

Series MN11*

Compactly constructed jacks permit direct cross-patching with Switchcraft, WEco and MIL-type telephone plugs and patch cords. Series M Hi-D Jax® offer a choice of solder lugs or PC terminals. Both insulated and metal bushings can be specified, as well as .21" inside diameter sleeves for narrow plug fingers. Maximum contact resistance is .1 ohm. Springs are made of a special gold-plated copper alloy. Welded cross bar gold alloy contacts are available on special order.

## SERIES M-11* HI-D JAX®

Two- and 3-conductor type mate with .25" diameter finger plugs. Tip and ring springs are gold-plated. Shunts (if used) have welded crossbar palladium contacts. Ring springs (where used with shunts) have welded crossbar palladium contacts. Tip springs (when used) do not have a contact welded to the spring. Bushing has 3/8-32-NEF-2 thread; locknut and flat washer for mounting are supplied.

## SERIES MN-11* HI-D JAX®

Same as Series M-11* except threaded bushing is molded thermoplastic for insulated mounting. Continuous sleeve contact assures positive sleeve connection without exposed metal on front of panel.

## SERIES M113 AND M114 HI-D JAX®

The versatile 3-conductor M113 and M114 feature springs which accept a wide variety of 1/4" plug designs. Self-aligning PC terminals allow for easier insertion into a printed circuit board. Also feature a metric thread mounting.

## SPECIFICATIONS

### MATERIALS

**Mounting Bushing:** Series M11*, MS11* - Nickel-plated copper alloy. Series MN11*, MNS11* - Molded thermoplastic.
**Housing:** Molded thermoplastic, UL 94V-0.
**Springs:** Copper alloy.
**Contacts (mil-type):** Tip and Ring Springs are gold-plated. Shuntsprings (where used) are welded crossbar palladium. Welded crossbar gold alloy contacts are available on special order.
**Contacts (commercial):** Tin-plated integral contacts.
**Sleeve Terminal:** Steel, tin-plated.
**Hardware:** Supplied with one **P10001** copper alloy, nickel-plated locknut and one **S10221** steel, nickel-plated washer.

### MECHANICAL

**Life:** 10,000 insertion/withdrawal cycles, minimum.
**Insertion/Withdrawal Forces:** Nominal plug retention on 2-conductor jack is .75 pounds with .5 pounds minimum. Nominal plug retention on 3-conductor jack is 2 pounds with 1.5 pounds minimum. With double tips, the nominal is 1.5 pounds and 1 pound minimum.
**Maximum Recommended Mounting Torque:** 6" -lb. for thermoplastic bushing.
**Mounting Torque (for Spring Lock PC Terminal):** 8" -pound for thermoplastic bushings.

### ELECTRICAL

**Contact Resistance:** .020 ohms maximum (initial), .050 ohms maximum (after humidity, durability exposure). Per MIL-STD-202E.
**Insulation Resistance:** 10,000 MΩ minimum (initial), 1,000 MΩ minimum (after humidity).
**Dielectric Withstanding Voltage:** 500 V, 60 Hz (rms) AC.
Contact Rating: 0.25, 48 VDC make and break, 3A carry only.

### ENVIRONMENTAL

**Thermal Range:** -55°C to +85°C (non-operating); -20°C to +65°C (operating).
**Thermal Shock:** Per MIL-STD 202, method 107.
**Humidity:** Per MIL-STD 202, method 106.
**Salt Spray:** Per MIL-STD 202, method 101.

DIMENSIONS ARE FOR REFERENCE ONLY Inch (mm)


® Registered trademark of Switchcraft, Inc.
Note: Contact your Switchcraft Representative for price and delivery

* Please visit the product pages on our website for the most up-to-date product information

# 1/4" ENCLOSED TELEPHONE JACKS (CONTINUED)

### SERIES MS11* HI-D JAX®

3-conductor with .21" inside diameter sleeve. Mates with plugs having .206" diameter finger. Protects against accidental insertion of .25" diameter finger plugs. Gold-plated tip and ring springs. Welded crossbar palladium contacts on shunt springs standard. Bushing has 3/8-32-NEF-2 thread; locknut and flat washer for mounting are supplied.

### ◊SERIES MNS11* HI-D JAX®

Same as Series MS11* except bushing is molded thermoplastic.

### ◊TWIN M11* HI-D JAX®

Two Series M11* Hi-D Jax strapped on .625" centers. Mates with Switchcraft® Twin Plugs. 411, 412 and 413. MIL-type Littel-Plug® phone plugs, 420, 430 and 440 (2-conductor) and 482 and 483 (3-conductor) are also recommended for mating with this series.

### ORDERING INFORMATION

Order by part number from table.

| 2-CONDUCTOR | | | | |
|---|---|---|---|---|
| Part Number Solder Lugs | Part Number PC Terms | Description | Sche-matic** | Typical Mating Plug* |
| M111 | – | .25" I.D. sleeve, metal bushing. | I | 420 |
| MN111 | – | .25" I.D. sleeve, molded thermoplastic bushing. | | |
| ◊M112A | ◊M112APC | .25" I.D. sleeve, metal bushing. | III | |
| MN112A | ◊MN112APC | .25" I.D. sleeve, molded thermoplastic bushing. | | |
| M113E | – | .25" I.D. sleeve, metal bushing. | IX | |
| MN113E | – | .25" I.D. sleeve, molded thermoplastic bushing. | | |

◊ Special Order only; contact Switchcraft.
* Other mating plugs are contained in this plug section.
** See pages 79 and 80.

| 3-CONDUCTOR | | | | |
|---|---|---|---|---|
| Part Number Solder Lugs | Part Number PC Terms | Description | Sche-matic[1] | Typical Mating Plug[2] |
| M112B | · M112BPC | .25" inch I.D. sleeve, metal bushing. | IV | 482 |
| ML112B | – | .25" inch I.D. sleeve, .375 inch long metal bushing. | | |
| MN112B | · MN112BPC | .25 inch I.D. sleeve, molded thermoplastic bushing. | | |
| MNL112B | – | .25 inch I.D. sleeve, .375 inch long metal bushing. | | |
| M113B | – | .25 inch I.D. sleeve, metal bushing. | VII | 482 |
| MN113B | MN113BPC | .25 inch I.D. sleeve, molded thermoplastic bushing. | | |
| | M113BPC1M | .25 inch I.D. sleeve, molded thermoplastic bushing, metric hardware | | 482 |

| 3-CONDUCTOR | | | | |
|---|---|---|---|---|
| Part Number Solder Lugs | Part Number PC Terms | Description | Sche-matic[1] | Typical Mating Plug[2] |
| MNL113B | – | .25 inch I.D. sleeve, .375 inch long metal bushing. | VII | 482 |
| M114B | · M114BPC | .25 inch I.D. sleeve, metal bushing. | | 482 |
| | M114BPC1M | .25 inch I.D. sleeve, metal bushing, metric hardware. | XII | |
| MN114B | · MN114BPC | .25 inch I.D. sleeve, molded thermoplastic bushing. | | 480, 484 |

◊ Special order only; contact Switchcraft for price and delivery.
1 See schematics, pages 79 and 80.
2 Number(s) specified are not necessarily the only mating plug(s). See Plugs Section.

DIMENSIONS ARE FOR REFERENCE ONLY Inch (mm)

* Please visit the product pages on our website for the most up-to-date product information

# 1/4" ENCLOSED PHONE JACKS (continued)

## HI-D® JAX 2- AND 3-CONDUCTOR

SERIES 11*

PC TERMINAL VIEW

SERIES N11*

Hi-D Jax® 2- and 3-conductor enclosed phone jacks are ideal for panel/chassis and PC board mounting. Unitized molded housing protects springs, provides mechanical and electrical reliability, minimizes leakage and provides low capacity between springs. Mounts on .625" minimum centers in rows or arrays. .25" or .21" inside diameter bushing types, metal or thermoplastic bushings (for insulated mounting). Insulated Hi-D Jax® jacks are specifically designed for in-circuit (insulated) mounting from mounting surface and have fully protected enclosed internal sleeve feature. Solder lugs or PC terminals may be selected.

### MOUNTING

Jacks mount in a single .375" diameter hole on .625" minimum centers. Series 11*, N11*, NS11* and S11* mount in panels up to .156" thick. Series L11* and NL11* (long bushing) mount in panels up to .25" thick. Jacks with PC terminals mount on PC boards up to .094" thick. Formed “shoulders” on each terminal provide stable stand-off mount. Threaded bushing permits mechanical connection to equipment panel. Mounting hardware is supplied. Also available is a grounding spur bushing, which allows for positive grounding of the bushing to the chassis. Contact factory for details.

**SERIES 11* -** 2- and 3-conductor types, threaded metal bushing .276" long. .25" inside diameter bushings.

**SERIES L11* -** Same as Series 11*, except bushing is .375" long for mounting in panels up to .25" thick.

**SERIES N11* -** Same as Series 11*, except bushing is molded thermoplastic for insulated mounting.

**SERIES NL11* -** Same as Series N11*, except bushing is .375" long for insulated mounting in panels up to .25" thick.

**SERIES S11* -** Same as Series 11*, except bushing has .21" inside diameter. Smaller diameter protects against accidental insertion of plugs with .25" diameter fingers.

◊**SERIES NS11* -** (SPECIAL ORDER ONLY) - Same as Series N11*, except bushing is .21" inside diameter.

**113BPC1M AND 114BPC1M -** Versatile, 3-conductor 113BPC1M and 114BPC1M feature springs which accept a wide variety of 1/4" plug designs. Self-aligning PC terminals allow for easier insertion into a printed circuit board. Also feature a metric thread mounting.

### TWO CONDUCTOR PART NUMBERS

| Solder Lug Part Number | PC Terminals Part Number | Description | Jack Schematic[1] | Typical Mating Plug[2] |
|---|---|---|---|---|
| 111 | 111PC | Open circuit | I | 250 |
| N111 | N111PC | Insulated bushing | I | 250 |
| NL111 | - | .375 " long insulated bushing | I | 250 |
| 112A | 112APC | Single closed circuit | III | 250 |
| L112A | ◊L112APC | .375" long bushing | III | 250 |
| N112A | N112APC | Insulated bushing | III | 250 |
| NL112A | - | .375" long insulated bushing | III | 250 |
| 113 | 113PC | Isolated "make" circuit | V | 250 |
| N113 | - | Insulated bushing | V | 250 |
| ◊113D | ◊113DPC | Transfer circuit (1-C) | VI [3] | 250 |
| 113E | 113EPC | Isolated "break" circuit | IX | 250 |

### THREE CONDUCTOR PART NUMBERS

| | | | | |
|---|---|---|---|---|
| 112B | 112BPC | Double open circuit | IV | 267 |
| L112B | - | .375" long bushing | IV | 267 |
| N112B | N112BPC | Insulated bushing | IV | 267 |
| NL112B | - | .375" long bushing | IV | 267 |
| - | S112BPC | .210" inside diameter bushing | IV | S-267 |
| 113B | 113BPC | Single closed circuit | VII | 267 |
| - | 113BPC1M | Single closed circuit | VII | - |
| L113B | - | .375" long bushing | VII | 267 |
| N113B | N113BPC | Insulated bushing | VII | 267 |
| NL113B | - | .375" long bushing | VII | 267 |
| 113F | 113FPC | Ring circuit closed | XXVIII | 267 |
| 114B | 114BPC | Double closed circuit | XII | 267 |
| | 114BPC1M | Double closed circuit | XII | - |
| L114B | ◊L114BPC | .375" long bushing | XII | 267 |
| N114B | N114BPC | Insulated bushing | XII | 267 |
| NL114B | NL114BPC | .375" long bushing | XII | 267 |

1 Other circuits available; contact factory. Schematics pages 79 and 80.
2 See Plug Section for other options.
3 Two tip springs.
◊ Special order only. Contact Switchcraft.

**SPECIFYING NOTE:** Unless otherwise shown in “Description”, jacks have .276" long threaded bushings with .25" inside diameter.

### SPECIFICATIONS
### MATERIAL

**Mounting Bushing:** Series 11*, L11*, S11* - Nickel-plated copper alloy.
Series N11*, NL11*, NS11* - Molded thermoplastic over nickel-plated copper alloy sleeve.

DIMENSIONS ARE FOR REFERENCE ONLY Inch (mm)


® Registered trademark of Switchcraft, Inc.
Note: Contact your Switchcraft Representative for price and delivery

* Please visit the product pages on our website for the most up-to-date product information

## 1/4" ENCLOSED PHONE JACKS (continued)

### HI-D JAX® 2- AND 3-CONDUCTOR

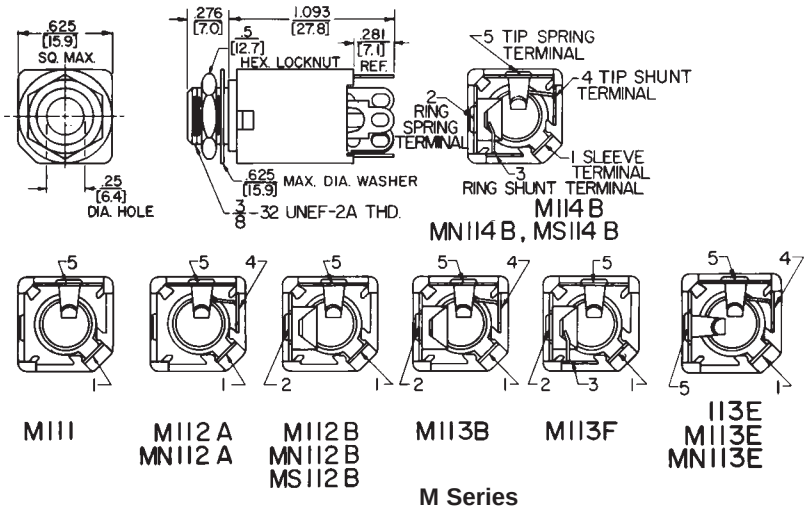


M Series

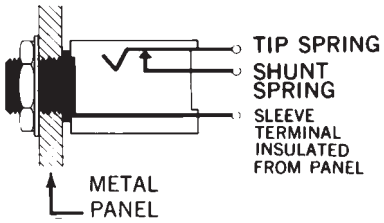


Hi-D Jax® with Insulated Bushing

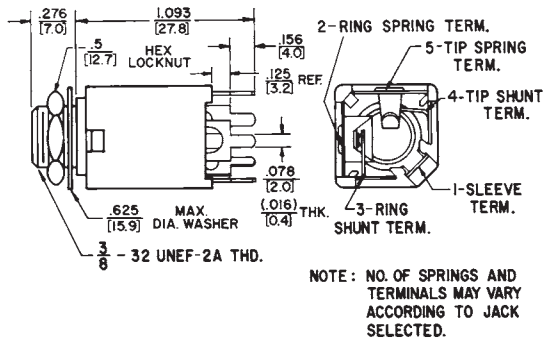


Hi-D Jax® with PC Terminals

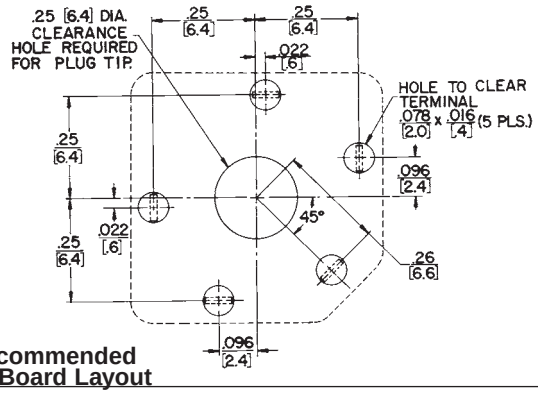


Recommended PCBoard Layout

Standard (Solder lugs)

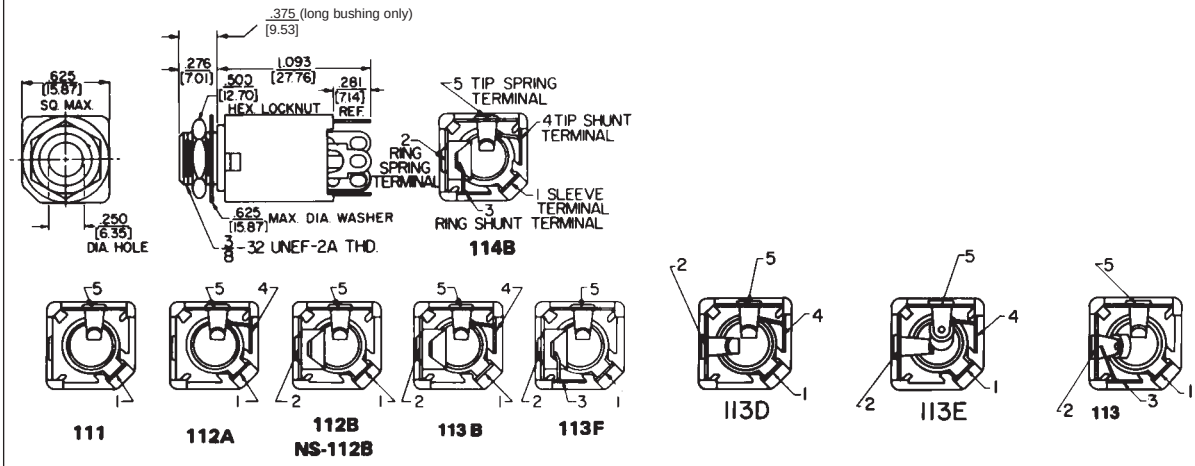


DIMENSIONS ARE FOR REFERENCE ONLY Inch (mm)

* Please visit the product pages on our website for the most up-to-date product information

# SPRING LOCK PC TERMINALS FOR HI-D JAX®

**HI-D JAX® SHOWING SPRING LOCK PC TERMINALS**

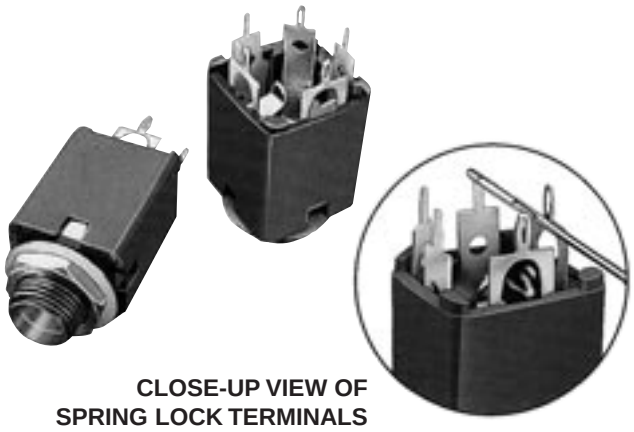

**CLOSE-UP VIEW OF SPRING LOCK TERMINALS**

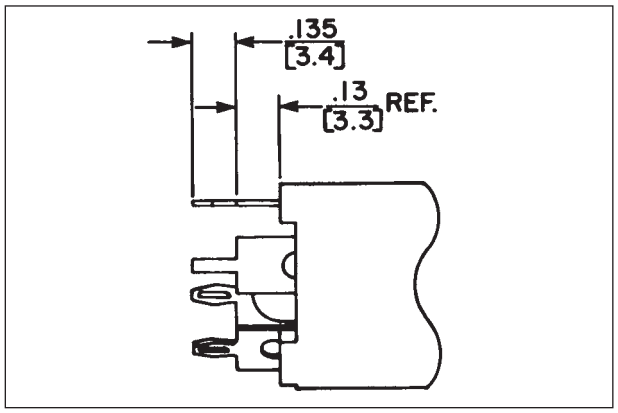


**PARTIAL VIEW SHOWING SPRING LOCK TERMINALS**

Tip, ring and sleeve terminals are spring lock type.

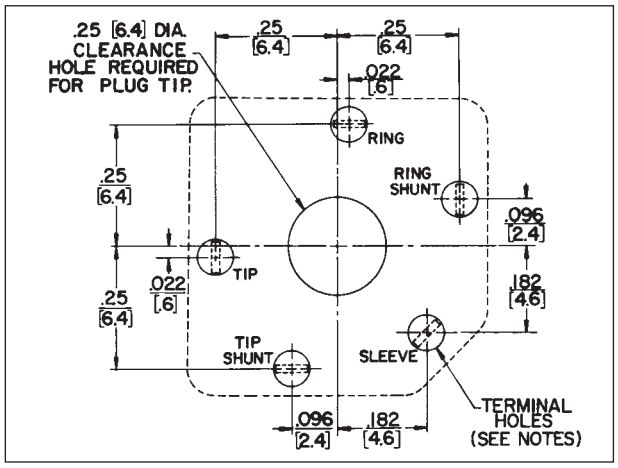


**RECOMMENDED PC BOARD LAYOUT SPRING LOCK TERMINALS (COMPONENT SIDE)**

NOTES:
1. SERIES 110PC—ALL HOLES TO CLEAR .078" X .016" TERMINAL.
2. SERIES 110PCS—TIP, RING & SLEEVE HOLES TO BE .055" DIA. RING SHUNT & TIP SHUNT HOLES TO CLEAR .078" X .016" TERMINAL.

Hi-D Jax® enclosed 1/4" phone jacks offer spring lock PC terminals which close during insertion into PC board. Upon completed insertion, the terminals reopen to securely hold the jack to the PC board during soldering. Solder "fills" the terminals which provides an additional security from loosening. The spring lock terminal is available on all Hi-D Jax® which currently offer PC terminals.
**NOTE:** Tip and ground terminals can be specified with spring lock terminals (also ring terminal on 3-conductor jacks).

## MOUNTING

Jacks mount in a single .375" diameter hole on .625" minimum centers. Series 11*, N11* and S11* mount in panels up to .156 " thick. Series NL11* (long bushing) mount in panels up to .250 " thick. Jacks with PC terminals mount on PC boards up to .094 " thick. Spring lock PC terminals hold jack securely to PC board. Threaded bushing permits mechanical connection to equipment panel. Mounting hardware is supplied. See "RECOMMENDED PC BOARD LAYOUT" for further details.

**SERIES 11* -** 2- and 3-conductor types, threaded metal bushing .276" long. .250 inch inside diameter bushings.
**SERIES N11* -** Same as Series 11* except bushing is molded thermoplastic for insulated mounting.
**SERIES NL-11* -** Same as Series N11* except bushing is .375" long for insulated mounting in panels up to .250" thick.
**SERIES S11* -** Same as Series 11* except bushing has .210" inside diameter Smaller diameter protects against accidental insertion of plugs with .250" diameter fingers.

## SPECIFICATIONS

### MATERIAL

**Mounting Bushing:** Series 11*, S11*: Nickel-plated copper alloy. Series N11*, NL11*: Molded thermoplastic over plated copper alloy sleeve.

### ORDERING INFORMATION

| TWO CONDUCTOR PART NUMBERS | | | |
|---|---|---|---|
| **Part Number** | **Description** | **Jack Schematic** | **Typical Mating Plug[1]** |
| ◊111PCS | Open circuit | I | 250 |
| ◊N111PCS | Insulated bushing | I | 250 |
| ◊112APCS | Single closed circuit | III | 250 |
| ◊N112APCS | Insulated bushing | III | 250 |
| 113PCS | Isolated "make" circuit | V | 250 |
| ◊113EPCS | Isolated "break" circuit | IX | 250 |
| **THREE CONDUCTOR PART NUMBERS** | | | |
| ◊112BPCS | Double open circuit | IV | 267 |
| ◊N112BPCS | Insulated bushing | IV | 267 |
| ◊S112BPCS | .210" I.D. bushing | IV | S267 |
| ◊113BPCS | Single closed circuit | VII | 267 |
| ◊N113BPCS | Insulated bushing | VII | 267 |
| 113FPCS | Ring closed circuit | XXVIII | 267 |
| ◊114BPCS | Double closed circuit | XII | 267 |
| ◊N114BPCS | Insulated bushing | XII | 267 |
| ◊NL114BPCS | .375" long bushing | XII | 267 |

1 See Jack Section for other mating plugs.
◊ Special order only. Contact Switchcraft.

DIMENSIONS ARE FOR REFERENCE ONLY Inch (mm)


® Registered trademark of Switchcraft, Inc.
Note: Contact your Switchcraft Representative for price and delivery

* Please visit the product pages on our website for the most up-to-date product information

# 1/4" RIGHT-ANGLE PHONE JACKS

**SERIES SN37, SN49 AND SN70**

**SN37A14B with cover Number P2993**

**SN49B12B with cover Number P2994** **SN49A12B**

**SN49C12B** **SN70B12A** **SN70C14B**

These low-profile phone jacks have "snap-in" PC mounting, right-angle plug insertion and available with 2- and 3-conductor circuits and plastic or metal bushings. Ideal for telecommunications, data processing and other high quality audio connecting applications.

**SERIES SN37A -** Right-angle PC mount phone jack with molded plastic housing. Only .375" high, this jack features a plain (non-threaded) bushing and accepts commercial standard phone plugs with .25" diameter finger.

**Jack circuit selection:**
2-conductor • Single open circuit • Shunted tip
3-conductor • Double open circuit • Shunted tip and ring

Jack housing snaps into PC boards (.062" thick) and features molded tension fingers to provide stable mount. Location pin polarizes mounting for correct insertion every time. Clearance between housing facilitates board cleaning without disturbing internal springs. SN37 without tension fingers available on special order.

Molded housing protects internal parts and allows high density packaging. Supplied with "Snap-On" cover.

**SERIES SN49A -** Similar to Series SN37A, except .492" high and insulated/plain (non-threaded) bushing. "Snap-On" cover available on special order only.

**SERIES SN49B -** Similar to Series SN37A, except .492" high and insulated threaded bushing. Washer and hex nut for bushing mount supplied. "Snap-On" cover available on special order only.

**SERIES SN49C -** Similar to Series SN37A, except .492" high and threaded metal bushing. Washer and hex nut for bushing mount supplied. "Snap-On" cover available on special order only.

**SERIES SN70B -** This series features threaded/insulated bushing and .708" in height. Circuit selection and housing features are same as Series SN49B. "Snap-On" cover not available.

**SERIES SN70C -** Same as Series SN70B, except bushing is threaded metal type.

## SPECIFICATIONS

### MECHANICAL

**Shock:** Per MIL-STD-202, method 213.
**Vibration:** Per MIL-STD-202, method 201.
**Insertion Force:** 8 pounds maximum.
**Withdrawal Force:** 1.5 pounds minimum.
**Life:** 10,000 cycles minimum.

### ELECTRICAL

**Insulation Resistance:** 2 x 106 MΩ at 500 V DC per MIL-STD-202, method 302 (initial).
**Dielectric Withstanding Voltage:** 500 V AC.

### ENVIRONMENTAL

**Thermal Range:** -55°C (-67°F) to +85°C (+185°F) Non operating. -20°C to + 65°C Operating.
**Thermal Shock:** Per MIL-STD-202d, method 107.
**Humidity:** Per MIL-STD-202, method 106, less steps 7A and 7B.
**Salt Spray:** Per MIL-STD-202, method 101.

### MATERIAL

**Housing and Cover:** Black thermoplastic, UL 94V-O.
**Contact Springs:** Copper alloy with tin-plated terminals.
**Hardware:** Nickel-plated copper alloy.
**Metal Bushing:** Nickel-plated copper alloy.

### ORDERING

1. Order jacks from tables on page 103.
2. For all special order items, contact Switchcraft.

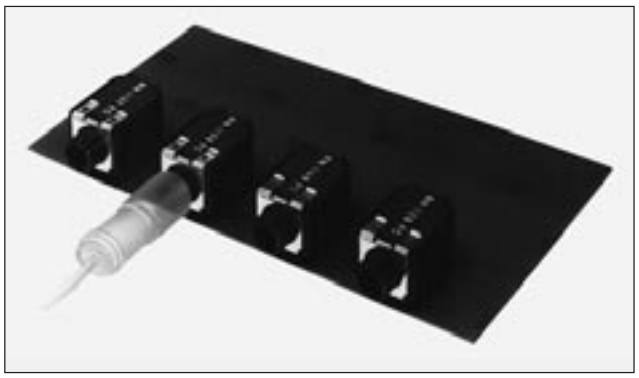

DIMENSIONS ARE FOR REFERENCE ONLY Inch (mm)

* Please visit the product pages on our website for the most up-to-date product information

# 1/4" RIGHT-ANGLE PHONE JACKS (continued)

**SERIES - RA and RN**

**Series RN110**

**Series RA**

**SERIES RA -** 2- and 3-conductor RA Jax® are designed with split terminals which provide two distinct advantages over contemporary jacks:

1. Positive retention of jack in PC board during wave soldering.
2. Split terminal permits additional solder flow paths up the terminal for better mechanical/electrical connection

Tip spring design facilitates positive retention of differing mating plug tip shapes (industry standard and others).

**SERIES RN -** Right-angle Hi-D Jax® permits space-saving mounting on PC boards. Available in 2- and 3-conductor types with or without shunt circuits, which can mate with .25" diameter COMMERCIAL or TELEPHONE/MIL plug fingers. Right-angle jack permits tip of mating plug to be inserted parallel with PC board. Can be mounted on PC boards or combined PC board and panel/chassis.

Mounted through .375" diameter holes (locknut and washer supplied) in panels and chassis up to .141" thick. Minimum mounting centers are .625". If insulated mount is desired, mounting with flat, non-conductive washer (not supplied) is recommended.

PC terminals mount on boards up to .125" thick, and hand dip or wave soldering, is recommended. Three separate standoffs fit through board to provide stable mounting.Threaded bushing permits optional fastening to panel or chassis.

**SERIES RN110 -** 2- and 3-conductor right-angle types mount in PC boards or panel/chassis. Bushing is .278" long.

## SPECIFICATIONS

**Housing:** Thermoplastic.
**Bushing:** Integral with housing.
**Springs:** Copper alloy, silver-plated (also available with selectively gold-plated contact points and selectively tin-plated terminals).
**Contacts:** Integral, part of shunt springs.

**NOTE:** Specifications for Mechanical, Electrical and Environmental are the same for Hi-D® Jax. (page 98)

DIMENSIONS ARE FOR REFERENCE ONLY Inch (mm)



® Registered trademark of Switchcraft, Inc.
Note: Contact your Switchcraft Representative for price and delivery

* Please visit the product pages on our website for the most up-to-date product information

# 1/4" RIGHT-ANGLE PHONE JACKS (continued)

## ORDERING INFORMATION

| SERIES SN Part Numbers | Description | Jack[2] Schematic | Typical Mating Plug[3] |
|---|---|---|---|
| **SN37A11[1]** | 2-cond., open circuit | I | 250 |
| **SN37A12A[1]** | 2-cond., single closed circuit | III | |
| **SN37A12B[1]** | 3-cond., double open circuit | IV | 267 |
| **SN37A14B[1]** | 3-cond., double closed circuit | XII | |
| **SN49A11[1]** | 2-cond., open circuit | I | 250 |
| **SN49A12A[1]** | 2-cond., single closed circuit | III | |
| **SN49A12B[1]** | 3-cond., double open circuit | IV | 267 |
| **SN49A14B[1]** | 3-cond., double closed circuit | XII | |
| **SN49B11[1]** | 2-cond., open circuit | I | 250 |
| **SN49B12A[1]** | 2-cond., single closed circuit | III | |
| **SN49B12B[1]** | 3-cond., double open circuit | IV | 267 |
| **SN49B14B[1]** | 3-cond., double closed circuit | XII | |
| **SN49C11** | 2-cond., open circuit | I | 250 |
| **SN49C12A** | 2-cond., single closed circuit | III | |
| **SN49C12B** | 3-cond., double open circuit | IV | 267 |
| **SN49C14B** | 3-cond., double closed circuit | XII | |
| **SN70B11** | 2-cond., open circuit | I | 250 |
| **SN70B12A** | 2-cond., single closed circuit | III | |
| **SN70B12B** | 3-cond., double open circuit | IV | 267 |
| **SN70B14B** | 3-cond., double closed circuit | XII | |
| **SN70C11** | 2-cond., open circuit | I | 250 |
| **SN70C12A** | 2-cond., single closed circuit | III | |
| **SN70C12B** | 3-cond., double open circuit | IV | 267 |
| **SN70C14B** | 3-cond., double closed circuit | XII | |

1 Series SN37A supplied with Part Number P2993 cover. Series SN49A and SN49B can be supplied with Part Number P2994 cover on special order. Contact Switchcraft.

## ORDERING INFORMATION

| SERIES RA Part Numbers | Description | Jack[2] Schematic | Typical Mating Plug[3] |
|---|---|---|---|
| **RA49B11** | 2-cond., open circuit | I | 250 |
| **RA49B12A** | 2-cond., single closed circuit | III | |
| **RA49B12B** | 3-cond., double open circuit | IV | 267 |
| **RA49B14B** | 3-cond., double closed circuit | XII | |
| **RA49C11** | 2-cond., open circuit | I | 250 |
| **RA49C12A** | 2-cond., single closed circuit | III | |
| **RA49C12B** | 3-cond., double open circuit | IV | 267 |
| **RA49C14B** | 3-cond., double closed circuit | XII | |
| **RA70B11** | 2-cond., open circuit | I | 250 |
| **RA70B12A** | 2-cond., single closed circuit | III | |
| **RA70B12B** | 3-cond., double open circuit | IV | 267 |
| **RA70B14B** | 3-cond., double closed circuit | XII | |
| **RA70C11** | 2-cond., open circuit | I | 250 |
| **RA70C12A** | 2-cond., single closed circuit | III | |
| **RA70C12B** | 3-cond., double open circuit | IV | 267 |
| **RA70C14B** | 3-cond., double closed circuit | XII | |
| **SERIES RN Part Numbers** | | | |
| **RN111PC** | 2-cond., single open circuit | I | 250 |
| **RN112APC** | 2-cond., single closed circuit | III | 250 |
| **RN112BPC** | 3-cond., double open circuit | IV | 267 |
| **RN113BPC** | 3-cond., tip closed, ring open | VII | 267 |
| **◊RN113FPC** | 3-cond., tip open, ring closed | XXVIII | 267 |
| **RN114BPC** | 3-cond., double closed circuit | XII | 267 |

2 See pages 79 and 80.
3 Other mating plugs are available.
◊ Special order only. Contact Switchcraft.

DIMENSIONS ARE FOR REFERENCE ONLY Inch (mm)

* Please visit the product pages on our website for the most up-to-date product information

## 1/4" RIGHT-ANGLE PHONE JACKS (continued)

**SERIES SN**

**JACK SCHEMATICS**

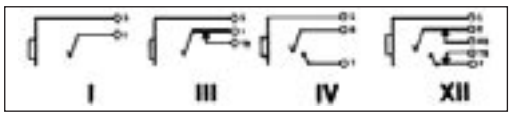


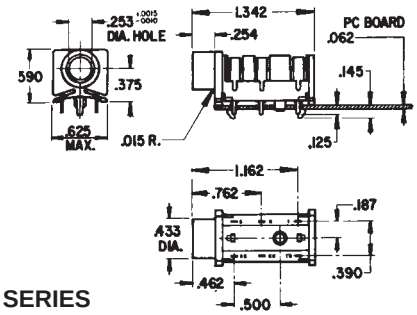


**SERIES SN37A**

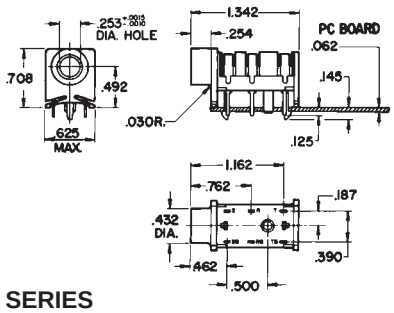


**SERIES SN49A**

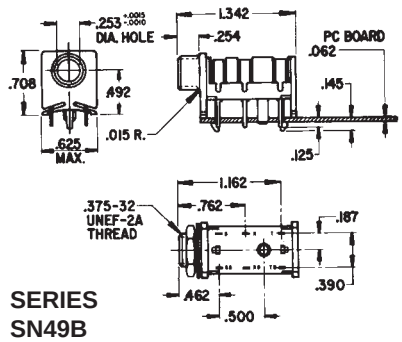


**SERIES SN49B**

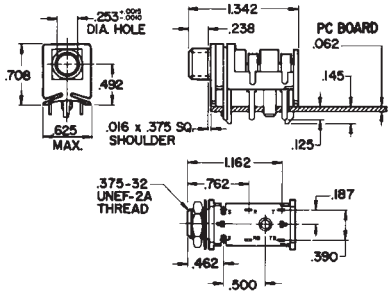


**SERIES SN49C**

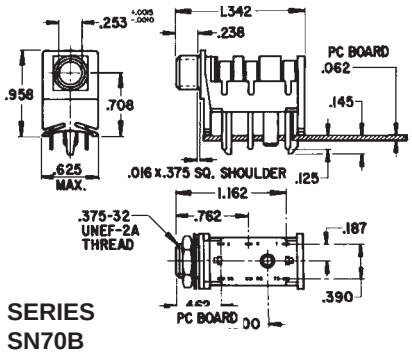


**SERIES SN70B**

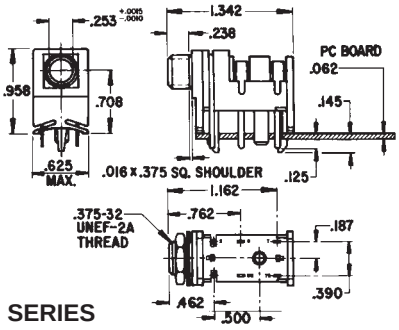


**SERIES SN70C**

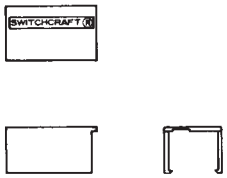


**COVERS, PART NO. P-293 & P-2994**
**(No. P-2994, special order only)**

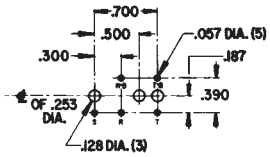


**RECOMMENDED PC BOARD LAYOUT**
**SERIES SN37A, SN49A & SN49B**
**(Component Side)**

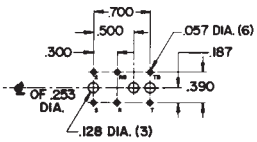


**RECOMMENDED PC BOARD LAYOUT**
**SERIES SN49C**
**(Component Side)**

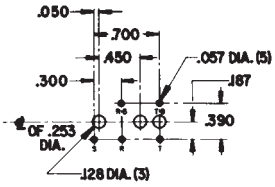


**RECOMMENDED PC BOARD LAYOUT**
**SERIES SN70B**
**(Component Side)**

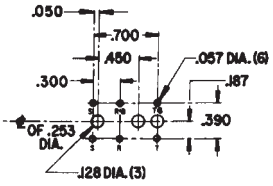


**RECOMMENDED PC BOARD LAYOUT**
**SERIES SN70C**
**(Component Side)**

DIMENSIONS ARE FOR REFERENCE ONLY Inch (mm)



® Registered trademark of Switchcraft, Inc.
Note: Contact your Switchcraft Representative for price and delivery

* Please visit the product pages on our website for the most up-to-date product information

# 1/4" RIGHT-ANGLE PHONE JACKS (continued)

**SERIES RA and RN**

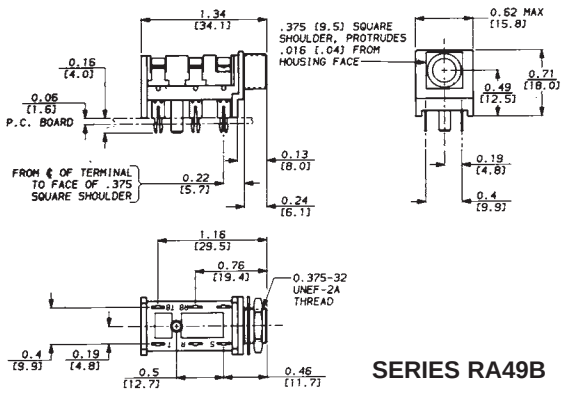


**SERIES RA49B**

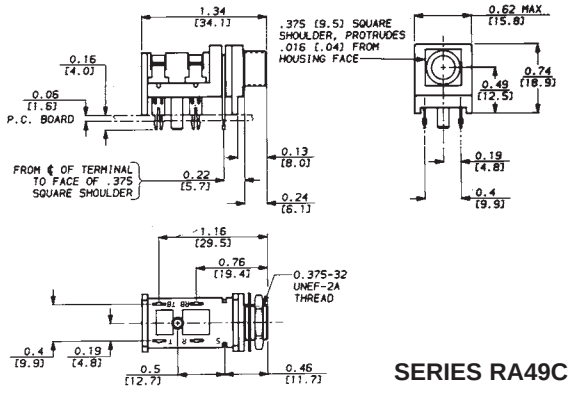


**SERIES RA49C**

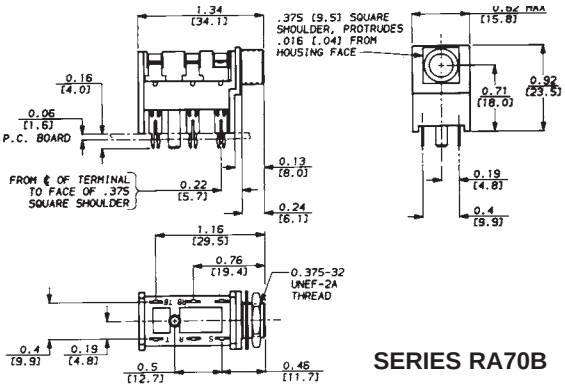


**SERIES RA70B**

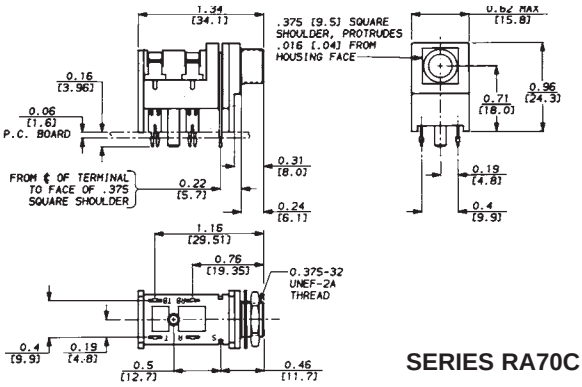


**SERIES RA70C**

**RN SERIES DIMENSIONS**

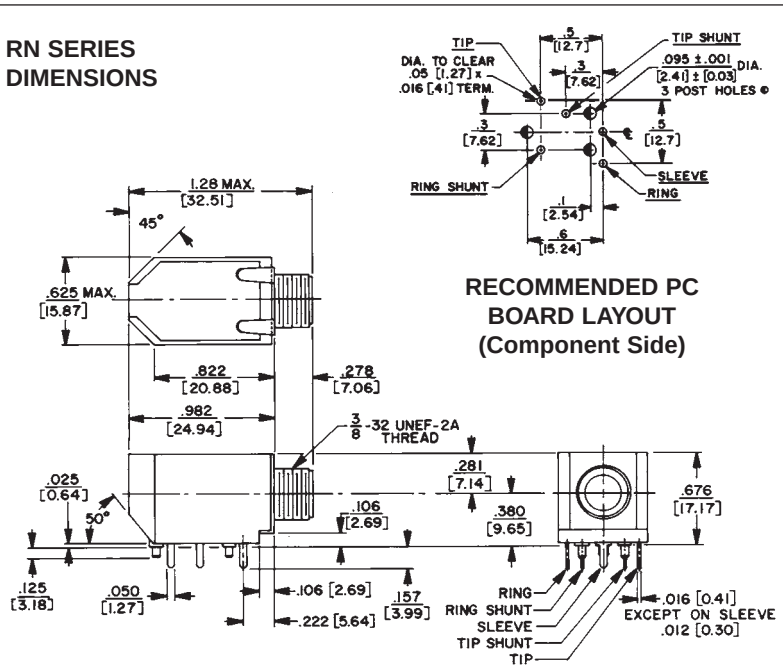


**RECOMMENDED PC BOARD LAYOUT (Component Side)**

**RECOMMENDED PC BOARD LAYOUT (Component Side)**

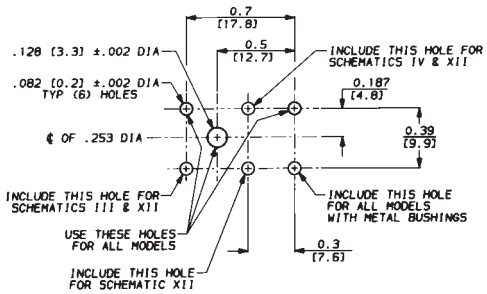


DIMENSIONS ARE FOR REFERENCE ONLY Inch (mm)

* Please visit the product pages on our website for the most up-to-date product information

# JACK COVERS

Reliable, spring-loaded covers effectively seal front panel bushing openings from dust and dirt when mating plugs are not connected to jack. Series 500 is mounted with conventional threaded bushing jacks. Special locknut (comes with Series 500 jack covers) seals tightly against rubber washer when cover is closed. Series 600 is used with certain type tip jacks. Due to variable jack dimensions, two .031" washers are supplied.

515

520

## SPECIFICATIONS

### MATERIAL

**Base and Cover:** Steel per QQ-S-698; finish per MIL-F-14072 (Sig. C), enamel, semi-gloss.
**Axle:** Copper alloy per QQ-W-321, Type 321, composition B. Plated per QQ-P-416, Type II, Class 3.
**Spring:** Stainless steel per QQ-W-432, Type 302.
**Hex Nut:** Copper alloy per QQ-B-626, composition 22. Same plating as axle.
**Gasket:** Synthetic rubber per MIL-R-6855, Type II, 35-40 Durometer.
**Washer (600 only):** Steel per QQ-S-698; plated per QQ-P-416, Type II, Class 3.
**Additional Specifications for Numbers 512 and 612:** Same as above, except rivet, base, cover and hex nut and washer (Number 612 only) are nickel-plated per QG-N-290.

| Color | Part No. | Part No. | Color | Part No. | Part No. |
|---|---|---|---|---|---|
| Olive Drab | **510** | ◊**610** | Black | **515** | **615** |
| Bright Nickel | **512** | **612** | Navy Gray | **520** | ◊**620** |

◊ Special order only. Contact Switchcraft.

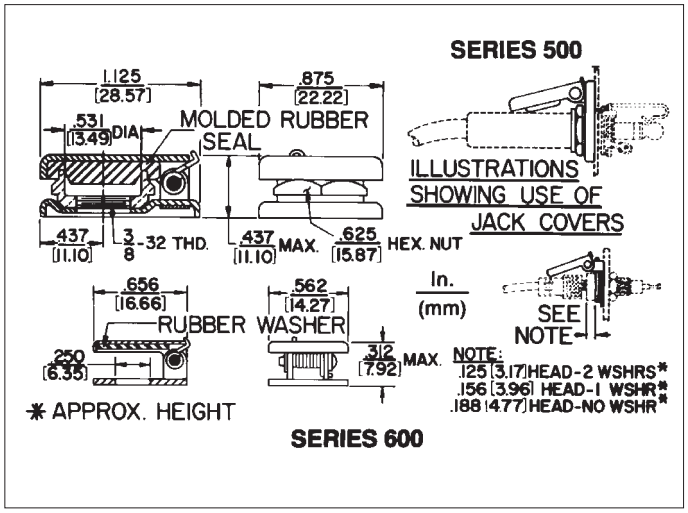


DIMENSIONS ARE FOR REFERENCE ONLY Inch (mm)


® Registered trademark of Switchcraft, Inc.
Note: Contact your Switchcraft Representative for price and delivery

* Please visit the product pages on our website for the most up-to-date product information

# 1/4" PHONE JACKS (continued)

## LOCKING PHONE JACKS

SERIES E

Series E jacks provide stable, secure connections in panels where shock/vibration or accidental disconnect may occur. Plug locks-in automatically upon insertion; press "PUSH" tab to unlock and remove plug. Series E jacks have the same front panel appearance as Series E Q-G® audio connectors.

### SPECIFICATIONS

### MECHANICAL

**Life:** 10,000 cycles minimum.

### ELECTRICAL

**Insulation Resistance:** 2 x 106 MΩ at 500 V DC per MIL-STD-202, method 302 (initial).
**Dielectric Withstanding Voltage:** 1,000 V AC (rms).

### ENVIRONMENTAL

**Thermal Range:** -55°C to +85°C (non-operating); -20°C to +65°C (operating).
**Thermal Shock:** Per MIL-STD-202, method 107.
**Humidity:** Per MIL-STD-202, method 106.
**Salt Spray:** Per MIL-STD-202, method 101.

### MATERIAL

**Shell:** Die-cast zinc, with satin nickel-plating. Black chrome over nickel-plating on special order.
**Insert and Latch:** Thermoplastic, UL 94V-O.
**Latch Release:** Nickel-plated die-cast zinc.
**Contact Springs:** Tin-plated copper alloy.

| Part Number | Description | Jack Schematic[1] | Typical Mating Plug[2] |
|---|---|---|---|
| E111L | 2-cond., open circuit | I | 250 |
| E112BL | 3-cond., double open circuit | IV | 267 |

1. See Jack Schematics, pages 79 and 80
2. See Plugs Section

## THICK PANEL PHONE JACKS

Jacks are standard 2- and 3-conductor phone jacks with extra long threaded bushing for mounting in panels/chassis up to 1.25" thick. Metal bushing virtually eliminates hum pick-up, and is ideal for electric guitar and speaker connections. Jacks mate with standard commercial phone plugs. See plug section for mating plugs. Jacks mount in a single .469" diameter hole. Rugged cable clamp protects connections from twisting and pulling stresses.

### SPECIFICATIONS

### MATERIAL

**Mounting Bushing:** Nickel-plated copper alloy with knurled flange.
**Insulating Spacer:** Rigid plastic.
**Insulator/Spring Mount:** Thermoplastic.
**Springs:** Copper alloy.
**Terminals:** Tip: Copper alloy. Ring: (Number **152B** only) copper alloy.
**Sleeve:** Steel, tin-plated.
**Hardware:** Supplied with one, Number **P10531** nickel-plated copper alloy hex nut, and one, Number **P14761** nickel-plated copper alloy flat washer.

| Part Number | Description | Jack Schematic | Typical Mating Plug |
|---|---|---|---|
| 151 | 2-conductor, open circuit, nickel finish | I | 280 |
| 152 | 2-conductor, open circuit, brass finish | I | 280 |
| 152B | 3-conductor, double open circuit, nickel finish | IV | 297 |
| 153 | 2-conductor, open circuit, gold-plated springs, electro-polish brass finish, 9/16-12 UNC wood threads | I | 280 |
| 154 | 3-conductor, double open circuit, gold finish, no cable clamp | IV | 297 |
| 155 | 3-conductor, double open circuit, black satin finish, no cable clamp | IV | |

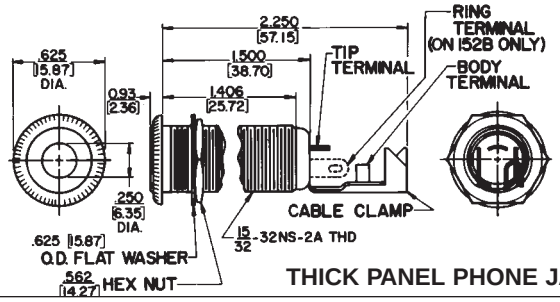


THICK PANEL PHONE JACKS

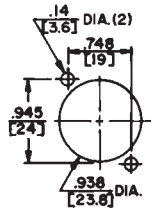


RECOMMENDED PANEL CUTOUT

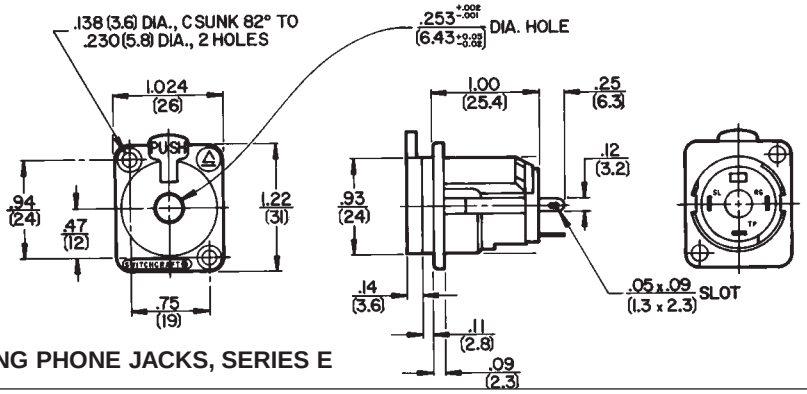


LOCKING PHONE JACKS, SERIES E

DIMENSIONS ARE FOR REFERENCE ONLY Inch (mm)

* Please visit the product pages on our website for the most up-to-date product information

## 1/4" EXTENSION JACKS (IN-LINE)

Extension Jax® jacks are connected to the end of a cable. 2- and 3-conductor jacks mate with standard commercial phone plugs, and have a sturdy cable clamp strain relief, knurled shielded or molded black plastic handles, and a screw type solder terminal. All internal parts are interlocked. Note: See locking phone plugs section.

### SPECIFICATIONS
### MATERIAL

**Body, Sleeve and Shielded Handle:** Nickel-plated copper alloy.
**Plastic Handles:** Molded black thermoplastic.
**Springs:** Special copper alloy.
**Bushing and Flange:** Plated copper alloy.
**Insulation:** Thermoplastic.
**Clamp Terminals:** Tin-plated copper alloy.

### TWO-CONDUCTOR PART NUMBERS

| Part Number | Description | Mating Plug[1] |
|---|---|---|
| 80 | Black handle; screw terminals | 250 |
| 88 | Black handle; solder lugs | 250 |
| 120 | Shielded handle; screw terminals | 250 |
| 121 | Shielded handle; solder lugs; cable clamp | 250 |
| 128 | Shielded handle; solder lugs | 250 |

### THREE-CONDUCTOR PART NUMBERS

| Part Number | Description | Mating Plug[1] |
|---|---|---|
| 131 | Shielded handle; solder lugs | 267 |
| 830 | Black handle; screw terminals | 267 |
| S830 | Similar to No. 830 except, .21" I.D. sleeve | 480 |
| 838 | Black handle; solder lugs | 267 |
| 1230 | Shielded handle; screw terminals | 267 |
| 1238 | Shielded handle; solder lugs | 267 |

1. Other mating plugs are available.

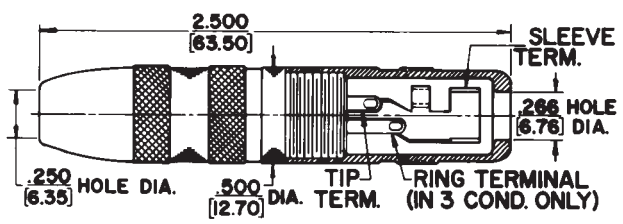


121, 131

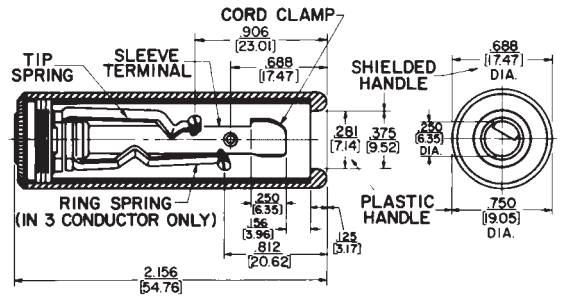


Z15J

## 1/4" SPEAKER JACKS

High power 2-conductor speaker jack carries 15A (continuous) audio speaker current levels. Jack Number **Z15J** has positive detent for plug retention. Terminations are solder lug; wires accepted are up to 10 AWG. Red housing indicates high current rating. Recommended mating plugs: 70, 184, 187 series.

Z15J

### SPECIFICATIONS

**Housing:** Glass reinforced thermoplastic, UL 94V-O.
**Tip Spring and Ground Terminals:** Copper alloy.
**Bushing and Hardware:** Nickel-plated copper alloy (hardware supplied).
**Heat Rise:** 30°C with 15 A continuous carry.
**Life:** 10,000 (minimum) with proper plug.

| Part Number | Description |
|---|---|
| Z15J | High power speaker jack |

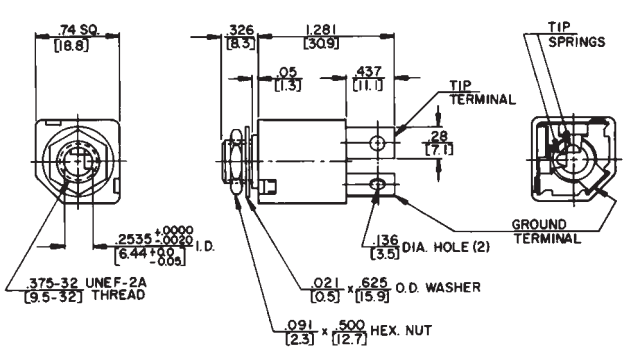


DIMENSIONS ARE FOR REFERENCE ONLY Inch (mm)


® Registered trademark of Switchcraft, Inc.
Note: Contact your Switchcraft Representative for price and delivery

* Please visit the product pages on our website for the most up-to-date product information

## 1/4" SHIELDED PHONE JACKS

CN12A

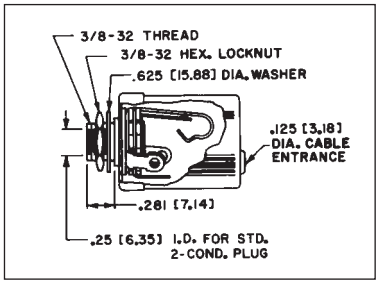


Shield is assembled as part of the jack; cover "snaps" into place. Shield is designed for Hi Z circuits. Mounting is through a 3/8" diameter hole in chassis/panel up to .156" thick with hex nut and flat washer (supplied). On special order, jacks with .21 inch inside diameter bushing are available.

### SPECIFICATIONS
### MATERIAL

**Cover and Shield:** Copper alloy, nickel-plated.
**Cable Entry Insulation:** Thermoplastic.

### TWO CONDUCTOR PART NUMBERS

| Part Number | Description | Jack Schematic[1] |
|---|---|---|
| **CN11** | Uses Number 11 Littel-Jax® jacks | I |
| **◊CN12A** | Uses Number 12A Littel-Jax® jacks | III |

◊ Special order only. Contact Switchcraft.

### THREE CONDUCTOR PART NUMBERS

| | | |
|---|---|---|
| **CN12B** | Uses Number 12B Littel-Jax® jacks | IV |
| **◊CN13B** | Uses Number 13B Littel-Jax® jacks | VII |

1 See jack schematics on pages 79 and 80.
2 See Plug Section for mating information.
◊ Special order only. Contact Switchcraft.

## SF-JAX® SHORT FRAME JACKS

| Part No. | Cond. | Schematic Number | Typical Mating Plug | MIL Type | Contacts | Rating | Mounting In. (mm) |
|---|---|---|---|---|---|---|---|
| **24B** | 3 | XII | 267 | ----- | Fine Silver | 3A 125V AC | .375 (9.52) hole, mounts in panels up to .156 (3.96) thick |
| **25** | 2 | XIII | 250 | ----- | | | |
| **◊53B** | 3 | VII | 267 | ----- | | | |
| **◊54A** | 2 | XI | 250 | ----- | | | |
| **◊54B** | 3 | XII | 267 | ----- | | | |
| **◊55** | 2 | XIII | 250 | ----- | | | |
| **◊C-55B** | 3 | XV | 482 | JJ-095, M641/14-1 | | | |

Long spring design reliability with minimum behind-panel depth. Series 50 same as Series 20, except solder lug location requires more depth, but less panel space. Number C55B has MIL type insulation and finish.

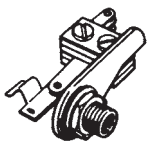

SERIES 20

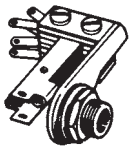

SERIES 50

## .141" MINIATURE PHONE JACKS

125

### MINIATURE EXTENSION JACK, PHONE JACK NUMBER 125 (EIA STANDARD)

Cable-mounted Tini-Extension Jax® 2-conductor single open circuit jack has built in cable clamp/sleeve terminal. Mates with Tini-Plug® phone plugs and other plugs with .141" diameter fingers and compatible tip shape. Shielded housing/handle is knurled for positive fingertip grip; solder lug terminals.
**Body and handle:** Nickel-plated copper alloy.
**Insulation:** Rigid plastic.
**Springs:** Plated copper alloy.

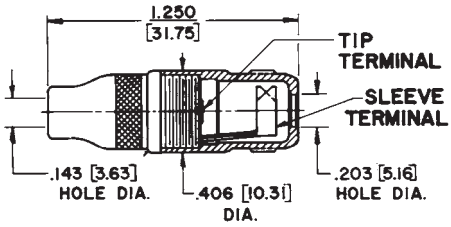


TINI-EXTENSION JAX JACK

| Part Number | Description | Jack Schematic | Typical Mating Plug |
|---|---|---|---|
| **125** | Extension Jack | I | 750 |

DIMENSIONS ARE FOR REFERENCE ONLY Inch (mm)

* Please visit the product pages on our website for the most up-to-date product information

# .141" MINIATURE PHONE JACKS

41

42A

142A

PC142A

## TINI-JAX® MINIATURE PHONE JACKS, NUMBERS 41, 42A, 43A

Tini-Jax 2-conductor phone jacks, (for limited space connecting, mate with miniature phone plugs having .141 " diameter fingers and compatible tip shape) are 1/3 the size of Littel-Jax® and weigh less than 1/8 ounce. Notched insulators interlock internal parts. Unique tip spring shape mates with Switchcraft Tini-Plug® phone plugs. Mounting hole: .250" diameter in panels up to .125" thick (mounting hardware supplied). For insulated mount, order two washers separately, Number **S1564** (swedged fiber washer .312" diameter mounting hole) and number **S2207** (flat phenolic washer).

### SPECIFICATIONS
### MECHANICAL

**Life:** 5,000 insertion/withdrawal cycles, minimum.

### ELECTRICAL

**Contact Resistance:** .075 ohms maximum.
**Insulation Resistance:** 5,000 MΩ minimum.
**Dielectric Withstanding Voltage:** 250 V AC maximum.
**Contact Rating:** .25A, 48 V DC.

### MATERIAL

**Mounting Bushing:** Nickel-plated copper alloy.
**Insulating Spacers:** Rigid plastic.
**Springs:** Special copper alloy.
**Sleeve Terminal:** Tin-plated copper alloy.
**Hardware:** Supplied with one, Number **P11501** nickel-plated copper alloy locknut, and one, Number **S17901** nickel-plated steel flat washer.

| Part Number | Description | Jack Schematic[1] | Typical Mating Plug[2] |
|---|---|---|---|
| **41** | Open circuit | I | 750 |
| **42A** | Shunted (closed circuit) | III | 750 |
| **43A** | Special transfer circuit | Note 3 | 750 |
| **142A** | Shunted (closed circuit) | III | 750 |
| **PC142A** | Shunted (closed circuit) | III | 750 |

1. See jack schematics, pages 79 and 80.
2. See Plugs Section for mating information.
3. When inserted, plug tip contacts "make" tip spring. Further insertion allows tip to short "make" tip spring and tip spring together. Full insertion opens tip shunt circuit.

## TINI-D-JAX® MINIATURE ENCLOSED PHONE JACKS, NUMBERS 142A, PC142A

Tini-D Jax uses Hi-D Jax® construction and mounts on .375" centers. Weight: 3.6 grams. Number 142A mounts through .25" diameter hole in chassis/panel up to .125" thick. Four standoff dimples can be molded into housing to reduce effective length of bushing to .187" (special order). Number **PC142A** has special spring terminals for "snap-in" mounting to PC boards up to .125" thick - ready for hand, wave or dip-soldering.

### SPECIFICATIONS
### MECHANICAL

**Life:** 5,000 insertion/withdrawal cycles, minimum.
**Insertion/Withdrawal:** 15 ounce minimum, 40 ounce maximum, insertion. 12 ounce minimum, 25 ounce maximum, withdrawal.

### ELECTRICAL

**Contact Resistance:** .10 ohms maximum.
**Dielectric Withstanding Voltage:** 250 V AC maximum.
**Shunt Tension:** 100 grams minimum.

### MATERIAL

**Housing:** Molded plastic.
**Mounting Bushing:** Plated copper alloy.
**Tip Spring:** Plated copper alloy, bifurcated.
**Shunt Springs:** Plated copper alloy.
**Sleeve Bracket:** Plated steel.
**Insulator:** Rigid plastic.
**Hardware:** Number **142A** supplied with one, Number **P1975** nickel-plated copper alloy locknut, and one, Number **S3997** nickel-plated steel flat washer.

DIMENSIONS ARE FOR REFERENCE ONLY Inch (mm)


® Registered trademark of Switchcraft, Inc.
Note: Contact your Switchcraft Representative for price and delivery

* Please visit the product pages on our website for the most up-to-date product information

## .141" MINIATURE PHONE JACKS (continued)

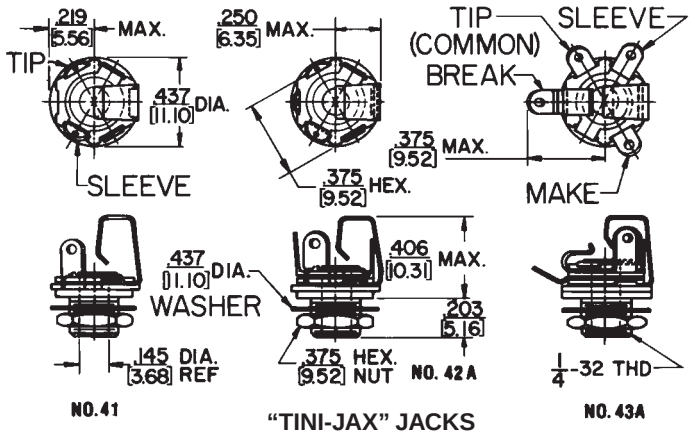


"TINI-JAX" JACKS

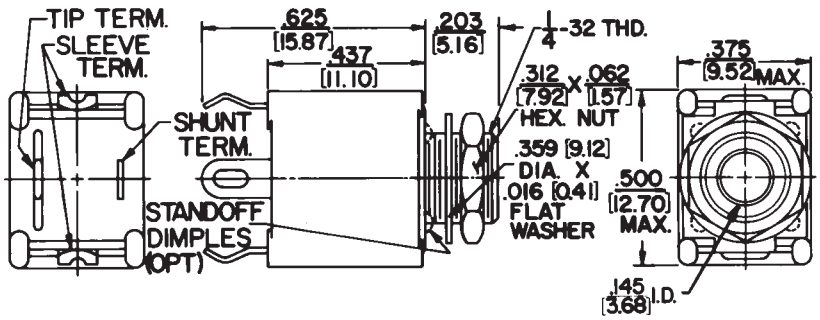


142A "TINI-D" JACKS

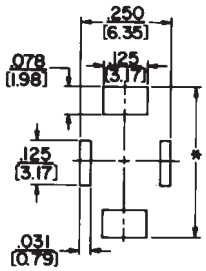


*.406 [10.31] FOR .062 [1.57] THK. BOARD
*.422 [10.72] FOR .078 [1.98] THK. BOARD
*.437 [11.10] FOR .093 [2.36] THK. BOARD

RECOMMENDED PC BOARD LAYOUTS

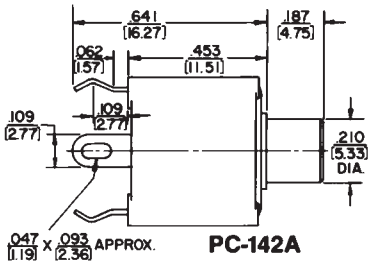


PC-142A

DIMENSIONS ARE FOR REFERENCE ONLY Inch (mm)

* Please visit the product pages on our website for the most up-to-date product information

# 3.5MM DUAL STEREO JACK

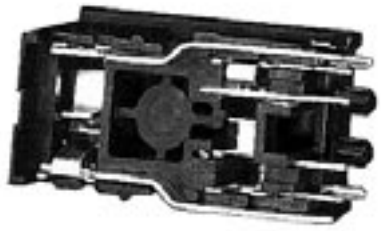

UNSHIELDED - 35RAPC7J

SHIELDED - 35RAPC7JS

## FEATURES

- 3-conductor, miniature phone jack mates with 3.5 mm finger plugs.
- Saves board space...two jacks in a single vertical mount footprint.
- Ideally suited for infra-red and convection oven soldering 235°C (455°F).
- Board retention pins accommodate PC board thickness range of .050" to .080".
- Single-screw panel mounting hole is standard.
- EMI-RFI shield, optional.
- Housing UL 94V-0 rated against flammability.

## APPLICATIONS

- Multi-media workstations
- Headphones/microphone sets
- Interactive TV
- Audio
- Telecommunications
- Medical
- Computer
- Instrumentation

## MATERIALS

**Housing:** Thermoplastic.
**Tip and Ring Springs:** Silver-plated copper alloy.
**Shunt Terminals:** Silver-plated copper alloy.
**Sleeve Terminals:** Silver-plated copper alloy.
**Shield:** Pre-tinned copper alloy.

## PERFORMANCE SPECIFICATIONS

**Insertion/Extraction Forces, initial:** 0.8 to 6 pounds.
**Dielectric Withstanding Voltage:** 500 VAC.
**Insulation Resistance, initial:** 100 Megaohms, min.
**Contact Resistance:** Between plug and jack:
50 milliohms, maximum Between springs and shunts:
30 milliohms, maximum.
**Life:** 5000 cycles, minimum.

## ORDERING INFORMATION

**Part Number:**
Shielded - **35RAPC7JS**
Unshielded - **35RAPC7J**
**1.** Order by part number.
**2.** Contact Switchcraft for special order information.

DIMENSIONS ARE FOR REFERENCE ONLY Inch (mm)



® Registered trademark of Switchcraft, Inc.
Note: Contact your Switchcraft Representative for price and delivery

* Please visit the product pages on our website for the most up-to-date product information

## 3.5MM DUAL STEREO JACK (continued)

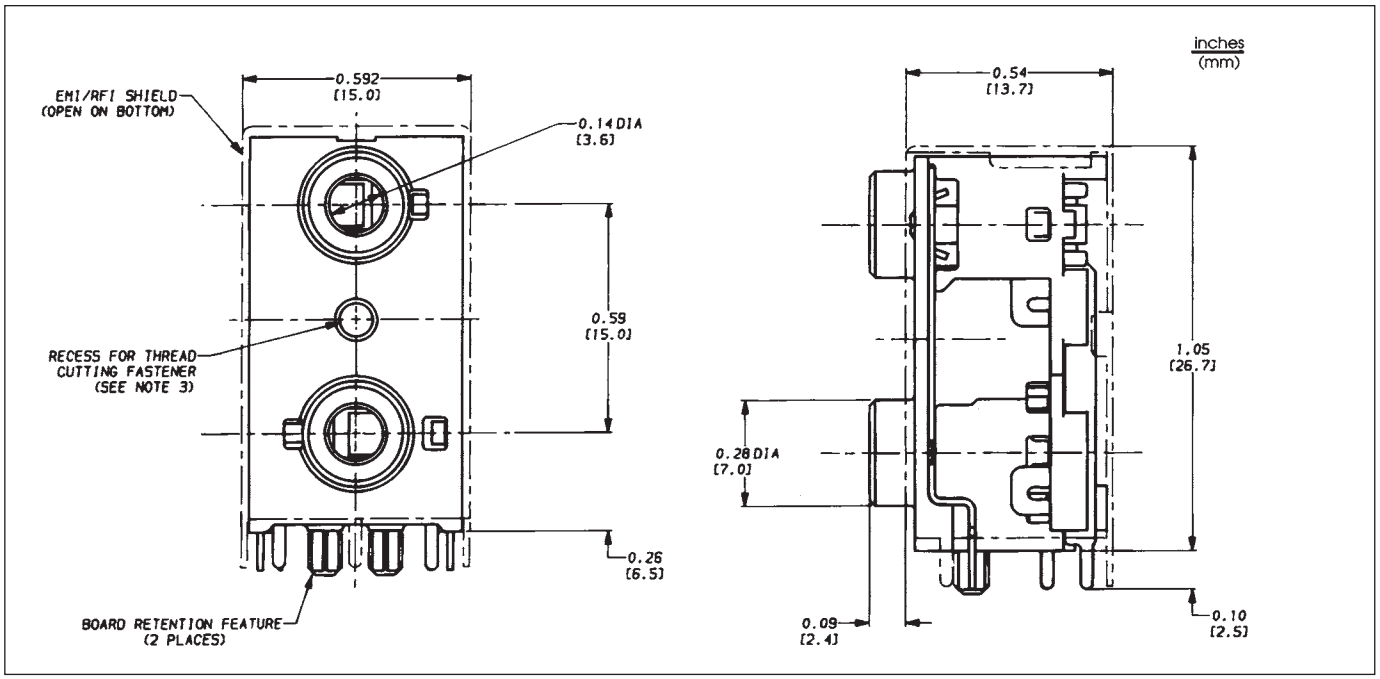


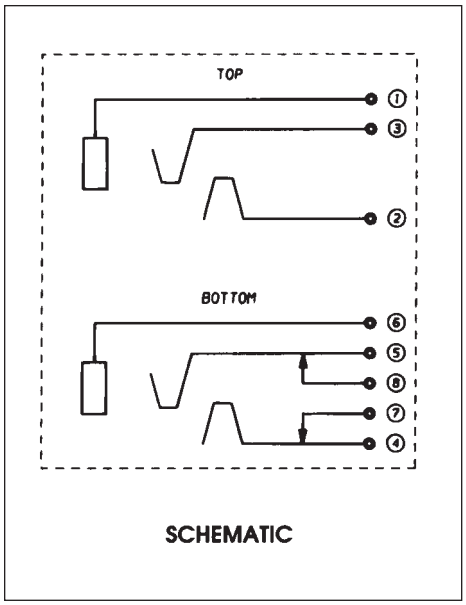


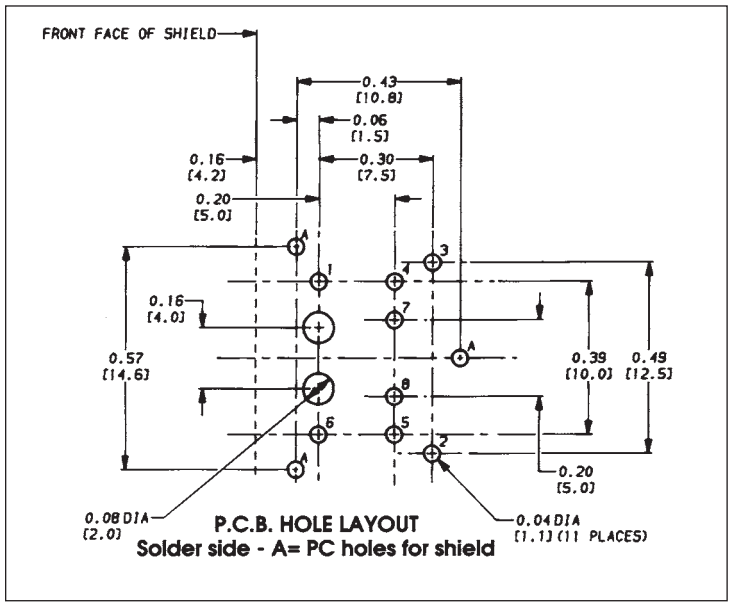


**NOTES:**

**1.** Shield isolated from terminals 1 and 6.
**2.** Width of all terminals = 0.032" (0.814 mm).
**3.** Use Camcar Textron S25 T8 TORX pan head "Duro-PT" thread cutting fastener of appropriate length or equivalent.

DIMENSIONS ARE FOR REFERENCE ONLY Inch (mm)

* Please visit the product pages on our website for the most up-to-date product information

# 3.5MM SINGLE MONO AND STEREO JACKS

35RAPC4BV4

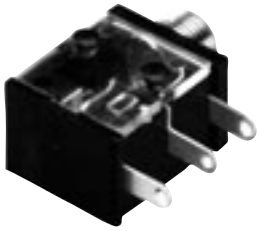
35RAPC2AV

35RAPC2BHN2

35RAPC4BH3

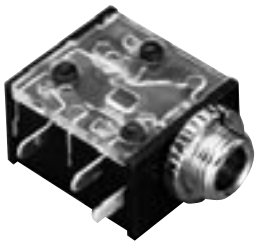
35RAPC2BV4

35RAPC2BH3

## FEATURES

- 2 and 3 conductor 3.5mm phone jacks
- Right angle PC mount, true SMT versions, and open frame panel mounts
- Wide variety of circuits available
- Mates with all 3.5mm plugs Right angle PC mount available in low profile, horizontal styles

## MATERIALS

**Housing:** Thermoplastic, UL94V-1
**Terminals:** Silver-plated, copper alloy
**Bushing:** Nickel-plated, copper alloy
**Performance Specifications:**
**Contact Resistance:** < 50 milliohms
**Insulation Resistance:** 100 milliohms min.
**Dielectric Withstanding Voltage:** 250 VAC (35RAPC2BHN2- 500 VAC)
**Open Frame Versions Materials:**
**Housing (35PM2BV2):**
Thermoplastic, 94V-1
**Life:** 5000 cycles, min.
**Bushing:** Nickel-plated, copper alloy
**Insulating Washers:** Rigid Plastic
**Springs:** Copper alloy
**Sleeve Terminal:** Tin-plated, copper alloy
**Hardware:** Supplied with one, **P11501** nickel-plated brass locknut, and one, S17901 nickel-plated steel flat washer
**Performance Specifications:**
**Contact Resistance:** .075 ohms max.
**Insulation Resistance:** 5,000 Mohms min
**Dielectric Withstanding Voltage:**
250 VAC Life: 5000 cycles, min

## ORDERING INFORMATION

Part numbers which include the letter "N" designate non-threaded bushings.
Part numbers without the letter "N" designate threaded bushing.

| Part Number | Description | Height vs. Width | Bushing |
|---|---|---|---|
| 35RAPC2AV | mono | vertical | threaded[3] |
| 35RAPC2AHN2 | mono | horizontal | non-threaded |
| 35RAPC2AHN3 | mono | horizontal | non-threaded |
| 35RAPC2BHN2 | stereo | horizontal | non-threaded |
| 35RAPC2BHN3 | stereo | horizontal | non-threaded |
| 35RAPC3BHN2 | stereo | horizontal | non-threaded |
| 35RAPC3BHN3 | stereo | horizontal | non-threaded |
| 35RAPC4BHN2 | stereo | horizontal | non-threaded |
| 35RAPC4BHN3 | stereo | horizontal | non-threaded |
| 35RAPC2AH3 | mono | horizontal | threaded[3] |
| 35RAPC2BH3 | stereo | horizontal | threaded[3] |
| 35RAPC3BH3 | stereo | horizontal | threaded[3] |

| Part Number | Description | Height vs. Width | Bushing |
|---|---|---|---|
| 35RAPC4BH3 | stereo | horizontal | threaded[3] |
| 35RAPC2AV4 | mono | vertical | threaded[3] |
| 35RAPC2BV4 | stereo | vertical | threaded[3] |
| 35RAPC3BV4 | stereo | vertical | threaded[3] |
| 35RAPC4BV4 | stereo | vertical | threaded[3] |
| 35RAPC2AVN4 | mono | vertical | non-threaded |
| 35RAPC2BVN4 | stereo | vertical | non-threaded |
| 35RAPC3BVN4 | stereo | vertical | non-threaded |
| 35RAPC4BVN4 | stereo | vertical | non-threaded |

Replacement Knurl Nut P3345

1. Order by part number
2. Contact Switchcraft for special ordering information
3. Mounting hardware included.

DIMENSIONS ARE FOR REFERENCE ONLY Inch (mm)


® Registered trademark of Switchcraft, Inc.
Note: Contact your Switchcraft Representative for price and delivery

* Please visit the product pages on our website for the most up-to-date product information

# 3.5MM SINGLE, MONO AND STEREO JACKS (continued)

### 35RAPC2AV – MONO, VERTICAL, THREADED

**MATERIALS**
**Coil Spring:** Steel wire.
**Bushing:** Nickel-plated copper alloy.
**Terminal:** Silver-plated copper alloy.
**Tip Spring:** Silver-plated copper alloy.
**Shunt Terminal:** Plated copper alloy.
**Cover:** Thermoplastic, transparent UL 94V-2.
**Body:** Thermoplastic, UL 94V-1 black color.

**PERFORMANCE SPECIFICATIONS**
**Contact Resistance:** 20 milliohms maximum.
**Insulation Resistance:**
100 milliohms minimum at 250V DC.
**Dielectric Withstanding Voltage:** 250V AC.
**Life:** 5000 cycles, minimum.
**Insertion Force:** 0.88 pounds - 3.5 pounds.
**Withdrawal Force:** 0.88 pounds - 2.64 pounds.

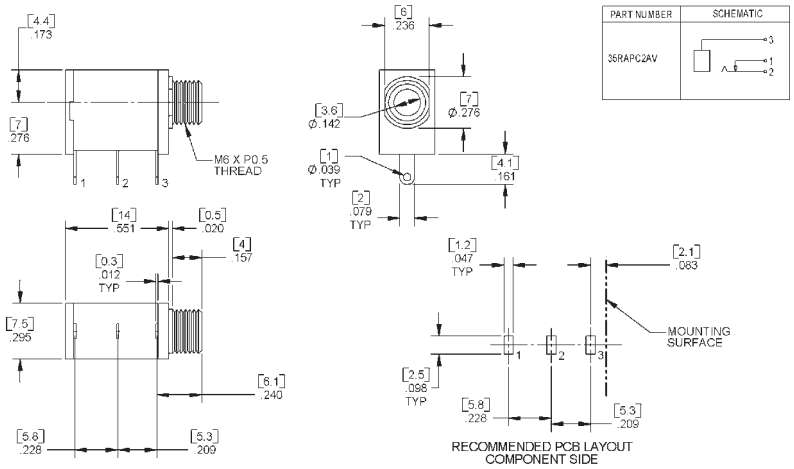


### 35RAPC2AV4, 35RAPC2BV4, 35RAPC3BV4, 35RAPC4BV4 - STEREO, VERTICAL, THREADED

**MATERIALS**
**Coil Springs:** Steel Wire.
**Ring Spring:** Copper alloy strip, tin alloy plating.
**Ground Terminal:** Copper alloy strip, tin alloy plating.
**Bushing:** Nickel-plated copper alloy.
**Cover:** Thermoplastic, UL 94V-0 black color.
**Body:** Thermoplastic, UL 94V-0 black color.

**PERFORMANCE SPECIFICATIONS**
**Contact Resistance:** 20 milliohms maximum,
initial 50 milliohms maximum, after life.
**Insulation Resistance:** 50 megohms minimum at 500V DC.
**Dielectric Withstanding Voltage:** 250V AC.
**Life:** 5,000 cycles, minimum.
**Insertion Force:** 0.88 lbs. to 3.50 lbs.
**Withdrawal Force:** 0.88 lbs. to 3.10 lbs.

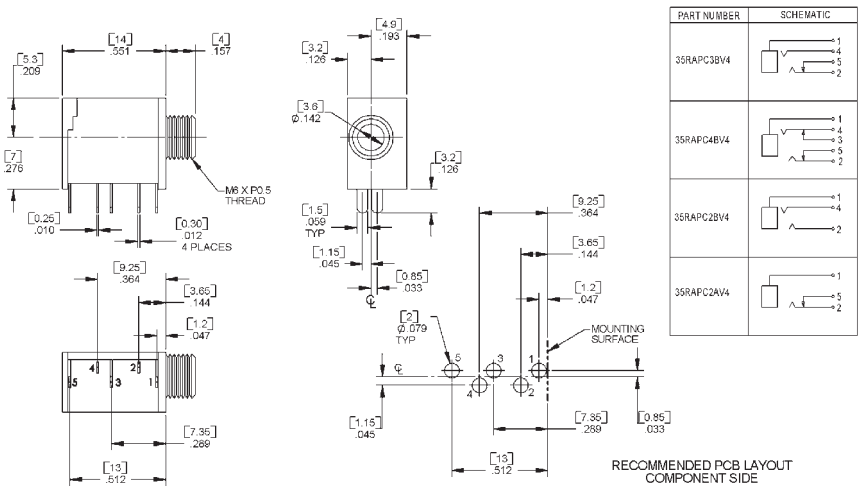


DIMENSIONS ARE FOR REFERENCE ONLY Inch (mm)

* Please visit the product pages on our website for the most up-to-date product information

# 3.5MM SINGLE, MONO AND STEREO JACKS (continued)

## 35RAPC2AHN2, 35RAPC2BHN2, 35RAPC3BHN2, 35RAPC4BHN2 - STEREO, HORIZONTAL, NON-THREADED

### MATERIALS

**Cover:** Thermoplastic, UL 94V-1 black color.
**Ring Spring:** Copper alloy.
**Tip Spring:** Silver-plated copper alloy.
**Ground Terminal:** Silver-plated copper alloy.
**Metal:** Copper alloy, nickel plating.
**Body:** Thermoplastic, UL 94V-0 black color.

### PERFORMANCE SPECIFICATIONS

**Contact Resistance:** 30 milliohms maximum, initial 100 milliohms maximum, after life.
**Insulation Resistance:** 100 megohms minimum at 500V DC.
**Dielectric Withstanding Voltage:** 500V AC.
**Life:** 5000 cycles, minimum.
**Insertion Force:** 0.88 pounds - 6.6 pounds.
**Withdrawal Force:** 0.88 pounds - 6.6 pounds.

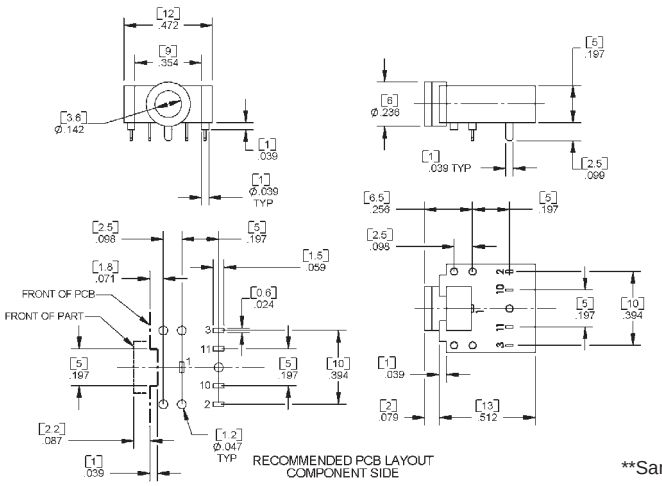


| PART NUMBER | SCHEMATIC |
|---|---|
| 35RAPC3BHN2 | |
| 35RAPC4BHN2 | |
| 35RAPC2BHN2 | |
| 35RAPC2AHN2 | |

**Same drawing for jack with non-threaded bushing.

## 35RAPC2AH3, 35RAPC2BH3, 35RAPC3BH3, 35RAPC4BH3 - STEREO, HORIZONTAL, THREADED

### MATERIALS

**Coil Springs:** Steel wire.
**Tip Spring:** Silver-plated copper alloy.
**Ring Spring:** Silver-plated copper alloy.
**Ground Terminal:** Silver-plated copper alloy.
**Bushing:** Nickel-plated copper alloy.
**Cover:** Thermoplastic, transparent UL 94V-2.
**Body:** Thermoplastic, UL 94V-1 black color.

### PERFORMANCE SPECIFICATIONS

**Contact Resistance:** 20 milliohms maximum, initial 100 milliohms maximum, after life.
**Insulation Resistance:** 100 megohms minimum.
**Dielectric Withstanding Voltage:** 250V AC.
**Life:** 5000 cycles, minimum.
**Insertion Force:** 0.88 lbs. - 3.50 lbs.
**Withdrawal Force:** 0.88 lbs. - 3.10 lbs.

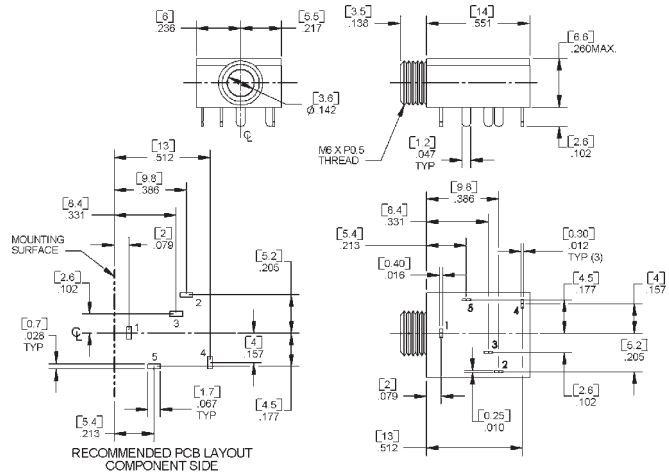


| PART NUMBER | SCHEMATIC |
|---|---|
| 35RAPC3BH3 | |
| 35RAPC4BH3 | |
| 35RAPC2BH3 | |
| 35RAPC2AH3 | |

DIMENSIONS ARE FOR REFERENCE ONLY Inch (mm)


® Registered trademark of Switchcraft, Inc.
Note: Contact your Switchcraft Representative for price and delivery

* Please visit the product pages on our website for the most up-to-date product information

# 3.5MM SINGLE MONO AND STEREO JACKS

Switchcraft introduces a new series of 3.5mm jacks. These low profile jacks come in a wide variety of circuits, both 2 and 3 conductor versions. Circuits include mono closed, stereo open, stereo tip closed and ring open, and stereo closed. The 35RASMT Series is available on tape and reel only. Contact Switchcraft for exact dimensions of the reels. They're designed for use in today's electronic equipment that features remote speakers, headsets, and headphones. While they are more compact than commonly used PC mount phone jacks, they are still extremely durable. Jacks come on tape and reel, 1K per reel.

35RASMT

## FEATURES AND BENEFITS
- SMT mounting
- Tape and reel packaging
- Wide variety of circuits

## APPLICATIONS
- Computer
- Video Cameras
- Personal/Portable Audio Devices
- Multimedia

## SPECIFICATIONS
**Electrical Current Rating:** 3A
**Contact Resistance:** <50 mohms
**Insulation Resistance:** 100 mohms (min.)
**Dielectric Withstanding Voltage:** 250VAC @ 1 minute

## MECHANICAL
**Lifecycles:** 5,000
**Operating Temperature:** -25°C to +85°C

## MATERIAL
**Housing:** Black thermoplastic
**Sleeve, Ring and Tip Terminals:**
Copper Alloy, silver-plated
**Shunt Terminal:** Copper Alloy, Silver-plated

### 3.5MM SINGLE MONO AND STEREO JACKS

| Part Number/Description |
|---|
| **35RASMT2AHNTR**<br>Mono, closed circuit, on tape and reel |
| **35RASMT2BHNTR**<br>Stereo, dual open circuit, on tape and reel |
| **35RASMT3BHNTR**<br>Stereo, tip closed and ring open circuit, on tape and reel |
| **35RASMT4BHNTR**<br>Stereo, dual closed circuit, on tape and reel |

(See next page for drawings.)

DIMENSIONS ARE FOR REFERENCE ONLY Inch (mm)

* Please visit the product pages on our website for the most up-to-date product information

## 3.5MM SINGLE MONO AND STEREO JACKS (continued)

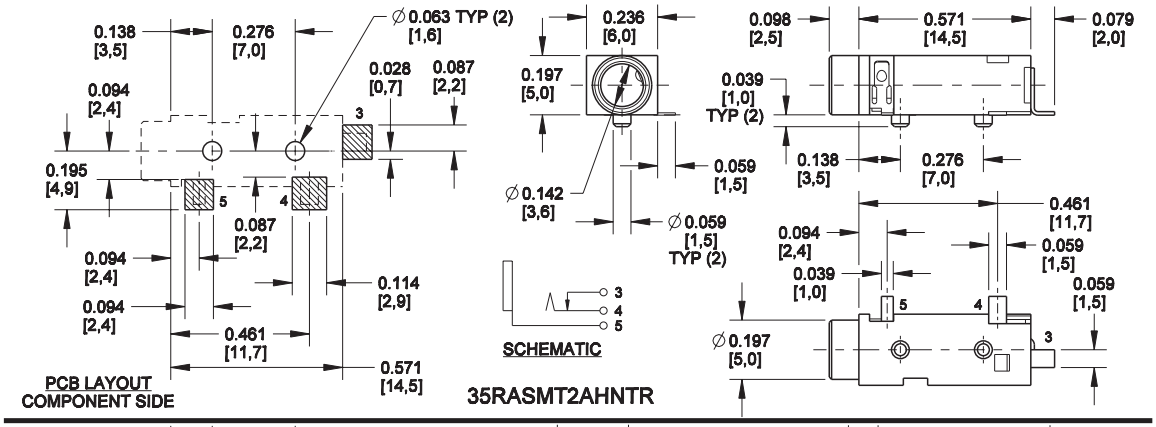


35RASMT2AHNTR

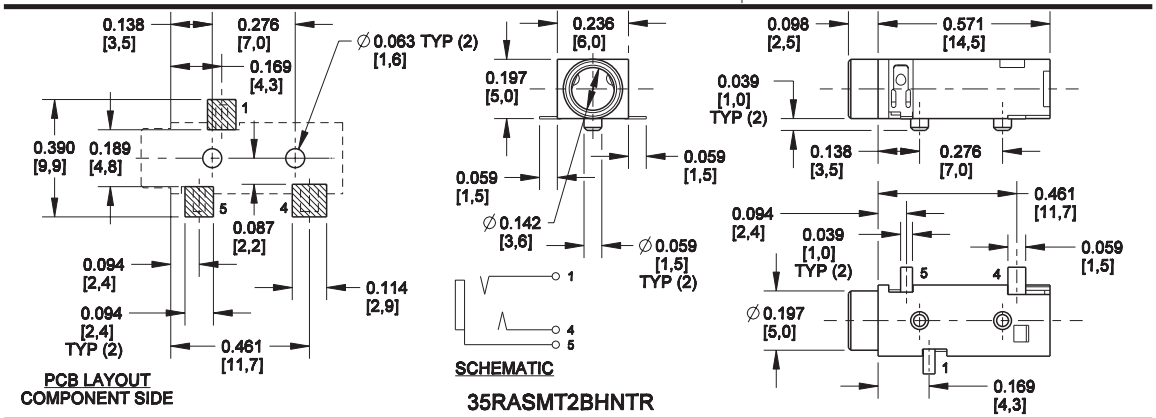


35RASMT2BHNTR

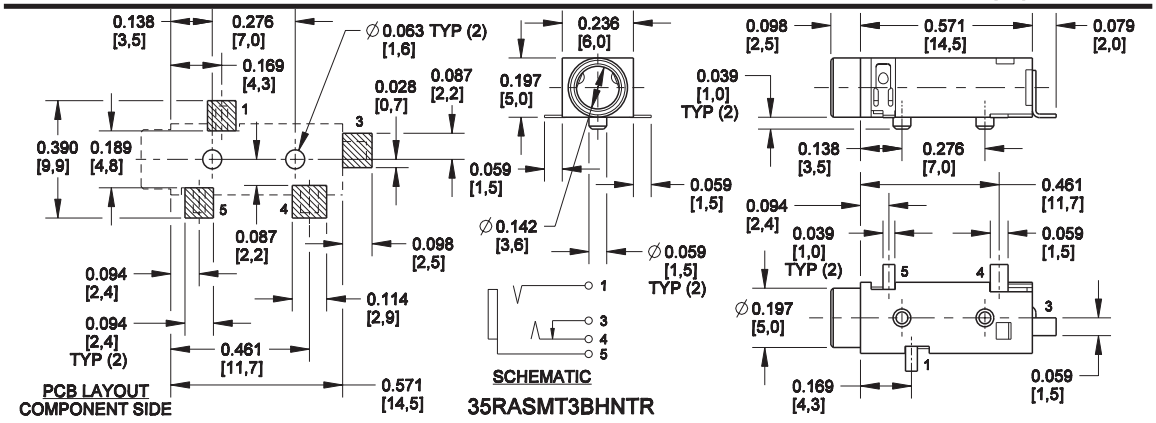


35RASMT3BHNTR

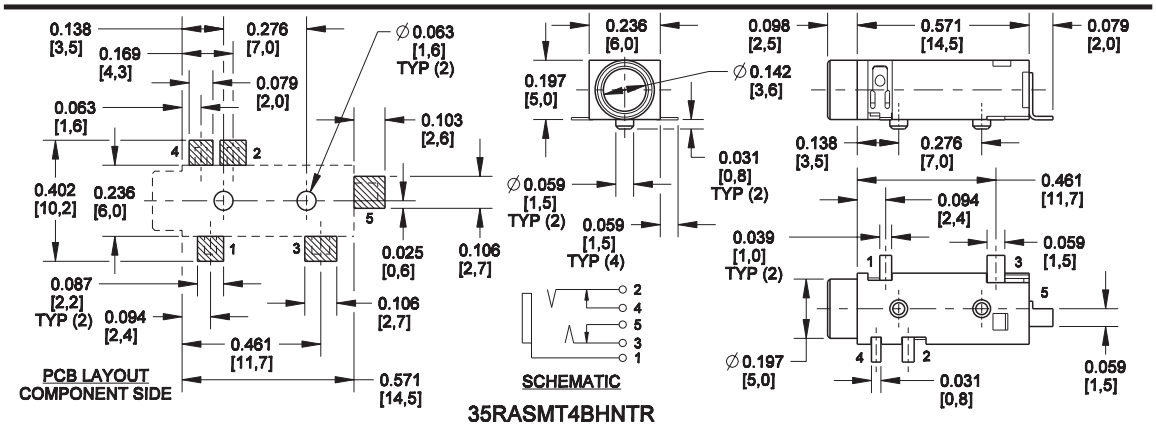


35RASMT4BHNTR

DIMENSIONS ARE FOR REFERENCE ONLY Inch (mm)


® Registered trademark of Switchcraft, Inc.
Note: Contact your Switchcraft Representative for price and delivery

* Please visit the product pages on our website for the most up-to-date product information

# 3.5 mm SINGLE MONO JACKS

35PM1

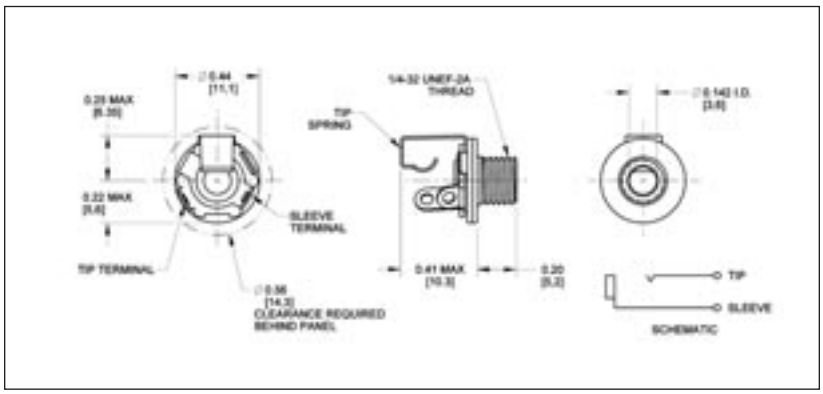

35PM2A

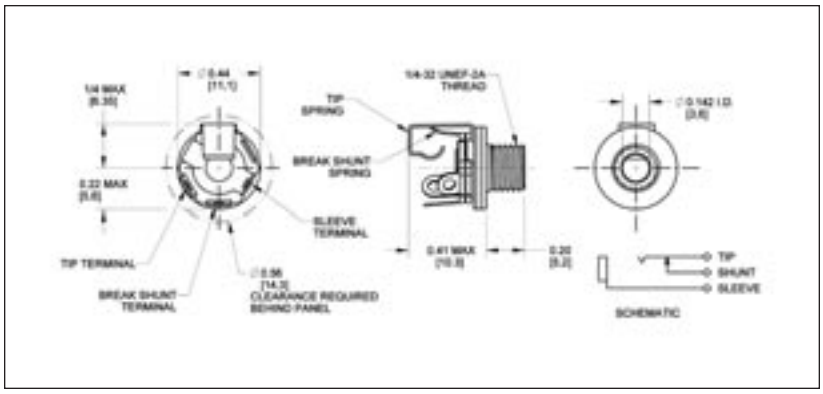


## FEATURES

- 2-conductor phone jacks similar to Littel-Jax® phone jacks, but smaller.
- For connecting in limited space
- Mate with 3.5 mm phone plugs
- Notched insulators interlock internal parts
- Mounting hole: .250" diameter in panels up to .125" thick (mounting hardware supplied)
- For insulated mount, order two washers separately, Number S1564 (swedged fiber washer .312" diameter mounting hole) and number S2207 (flat phenolic washer)

## SPECIFICATIONS

### MECHANICAL

**Life:** 5,000 insertion/withdrawal cycles, minimum

### ELECTRICAL

**Contact Resistance:** .075 ohms maximum
**Insulation Resistance:** 5,000 MΩ minimum
**Dielectric Withstanding Voltage:** 250V AC maximum
**Contact Rating:** .25A, 48V DC

## MATERIAL

**Mounting Bushing:** Nickel-plated copper alloy.
**Insulating Spacers:** Rigid plastic.
**Springs:** Copper alloy.
**Sleeve Terminal:** Tin-plated copper alloy.
**Hardware:** Supplied with one, Number P11501 nickel-plated brass locknut, and one, Number S17901 nickel-plated steel flat washer.

| PART NUMBER | DESCRIPTION | JACK SCHEMATIC[1] | TYPICAL MATING PLUG |
|---|---|---|---|
| 35PM1 | Open circuit | I | 750 |
| 35PM2A | Shunted (closed circuit) | III | 750 |

1. See jack schematics on pages 79 and 80.

## ORDERING INFORMATION

1. Order by part number.
2. Contact Switchcraft for more information.

DIMENSIONS ARE FOR REFERENCE ONLY Inch (mm)

* Please visit the product pages on our website for the most up-to-date product information

# 2.5MM SINGLE MONO AND STEREO JACKS

Switchcraft introduces a new series of 2.5mm jacks. These low profile jacks come in a wide variety of circuits, both 2 and 3 conductor versions. Circuits include mono closed, stereo open, stereo tip closed and ring open, and stereo closed. The MDSMT Series is available on tape and reel only. Contact Switchcraft for exact dimensions of the reels. They're designed for use in today's electronic equipment that features remote speakers, headsets, and headphones. While they are more compact than commonly used PC mount phone jacks, they are still extremely durable.

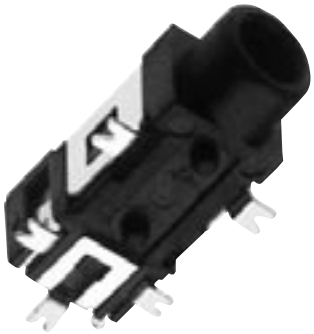

MDSMT4BRATR

## FEATURES AND BENEFITS

- SMT mounting
- Tape and reel packaging
- Wide variety of circuits

## APPLICATIONS

- Computer
- Video Cameras
- Personal/Portable Audio Devices
- Multimedia

## SPECIFICATIONS

**Electrical Current Rating:** 3A
**Contact Resistance:** <50 mohms
**Insulation Resistance:** 100 mohms (min.)
**Dielectric Withstanding Voltage:** 250VAC @ 1 minute

## MECHANICAL

**Lifecycles:** 5,000
**Operating Temperature:** -25°C to +85°C

## MATERIAL

**Housing:** Black thermoplastic
**Sleeve, Ring and Tip Terminals:** Copper Alloy, silver-plated
**Shunt Terminal:** Copper Alloy, Silver-plated

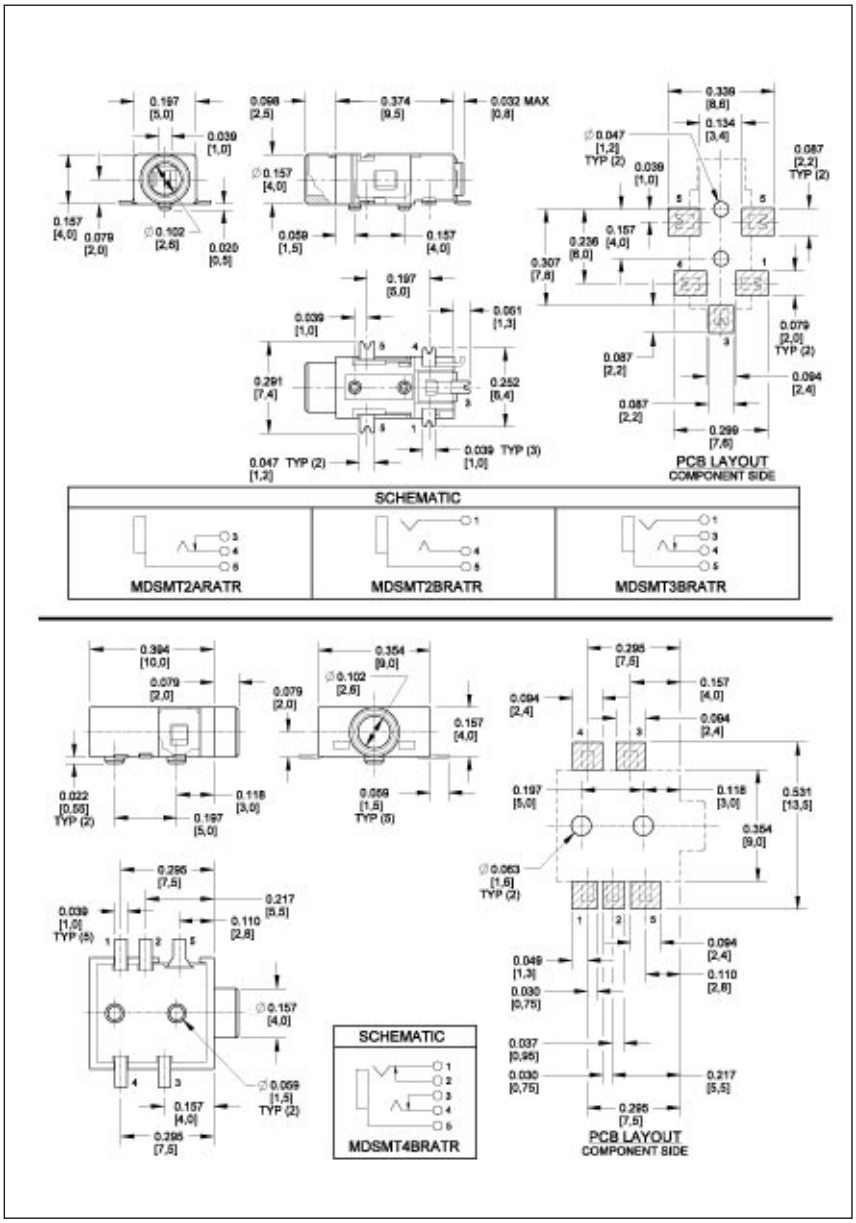


## 2.5MM SINGLE MONO AND STEREO JACKS

| Part Number/Description |
|---|
| **MDSMT2BRATR**<br>Stereo, dual open circuit |
| **MDSMT2ARATR**<br>Mono, closed circuit |
| **MDSMT3BRATR**<br>Stereo, tip closed and ring open circuit |
| **MDSMT4BRATR**<br>Stereo, dual closed circuit |

DIMENSIONS ARE FOR REFERENCE ONLY Inch (mm)


® Registered trademark of Switchcraft, Inc.
Note: Contact your Switchcraft Representative for price and delivery

* Please visit the product pages on our website for the most up-to-date product information

# .101" SUBMINIATURE PHONE JACKS

TR2A

TR1PC

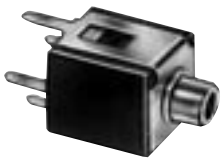
MDPC2A

MDSL2A

MDSL2ARA

MDPC2ARA

## SUBMINIATURE PHONE JACKS, TR2A AND TR1PC

Extremely small, rugged, shunted Micro-Jax® 2-conductor jack is 1/4 the size of a standard phone jack and weighs less than 1/20 ounce. Can be wired for open or closed circuit operation. Internally keyed insulators interlock all parts and tip springs grip mating plugs positively. Mates with Switchcraft Micro-Plug® phone plugs. Jacks mount through .190" diameter hole in chassis/panels up to .093" thick. For insulated mounting, a .281" diameter hole and .050" maximum panel thickness applies. Order insulating washer separately. Number **P1617** (flat phenolic washer) and Number **P1618** (swedged fiber washer).

**Number TR1PC:** 2-conductor closed circuit jack with PC terminals. Open frame and enclosed versions available. Mates with Switchcraft® Micro Plug® numbers 850, 855, and 880.

## SUBMINIATURE ENCLOSED PHONE JACKS

Micro-D Jax® 2-conductor jacks have insulated box construction and subminiature size.

**Number MDPC2A:** 2-conductor closed circuit jack with PC terminals. Mounts to single-, double-sided or multilayer boards either singly or in rows as close as .344" centers (+/- .01 inches). Bushing is .10" inside diameter.

**Number MDSL2A:** Same as MDPC2A except, 1. solder lugs, 2. bushing is #10-48 threaded (nut and washer supplied), and 3. mount ing centers are .35" or .313". When mounted on .313" centers, sleeves or adjacent jacks may be in intimate contact. Mounts through a .203" diameter hole in chassis/panels up to .063" thick.

## SUBMINIATURE RIGHT-ANGLE PHONE JACKS

2-conductor jacks have molded housing which protects all internal parts. Panel/chassis or PC boards mounting in rows, if desired, on .351" centers. PC terminals need only .382" behind-panel clearance.

**Number MDPC2ARA:** PC terminals mount/terminate directly to PC or multilayer boards. Bushing clears a .156" diameter panel hole.

**Number MDSL2ARA:** Right-angle solder lugs and #10-48 threaded bushing for chassis/panel mount. Mounts in .203" diameter hole in chassis/panels up to .063" thick.

## SPECIFICATIONS - MICRO-JAX® ELECTRICAL:

**Contact Resistance:** .10 ohms maximum (spring to plug).
**Shunt Resistance:** .10 ohms maximum.
**Dielectric Withstanding Voltage:** 250 V AC.
**Shunt Tension:** 60 grams minimum.

## MATERIAL:

**Mounting Bushing:** Nickel-plated copper alloy.
**Insulating Spacers:** Rigid plastic.
**Springs:** Nickel-plated copper alloy. Integral contacts are plated.
**Tip, Shunt and Sleeve Terminals:** Silver-plated copper alloy.
**Hardware:** Supplied with one, **P15331** nickel-plated copper alloy hex nut, and one **S29571** nickel-plated copper alloy flat washer.

## MATERIAL - TR1PC

**Threaded Bushing:** Nickel-plated copper alloy.
**Tip Spring:** Copper alloy.
**Sleeve/Ground Terminal:** Copper alloy tin-lead with nickel underplate.

## MECHANICAL - TR1PC:

**Life:** 10,000 insertion/withdrawal cycles, minimum.
**Insertion/Withdrawal Forces:** 11 ounces insertion, 11 ounce minimum withdrawal.

## ENVIRONMENTAL - TR1PC:

**Thermal Range:** -55°C to +85°C (non-operating); -20°C to +65°C (operating).
**Thermal Shock:** Per MIL-STD-202, method 107.
**Humidity:** Per MIL-STD-202, method 106.
**Salt Spray:** Per MIL-STD-202, method 101.

## SPECIFICATIONS - MICRO-D JAX MECHANICAL:

**Life:** 10,000 insertion/withdrawal cycles minimum.
**Insertion/Withdrawal Forces:** 11 ounce insertion, 11 ounce minimum withdrawal.

## ELECTRICAL:

**Contact Resistance:** .010 ohms maximum (initial), .020 ohms maximum (after humidity, durability exposure), .10 ohms maximum (after salt spray).
**Insulation Resistance:** 10,000 MΩ minimum (initial), 1,000 MΩ minimum (after humidity, durability exposure).
**Dielectric Withstanding Voltage:** 500 V AC maximum.
**Contact Rating:** .125 A, 125 V AC.

## ENVIRONMENTAL:

**Thermal Range:** -55°C to +85°C (non-operating); -20°C to +65°C (operating).
**Thermal Shock:** Per MIL-STD-202, method 107.
**Humidity:** Per MIL-STD-202, method 106.
**Salt Spray:** Per MIL-STD-202, method 101.

## MATERIAL:

**Housing:** Glass reinforced plastic. **Insulation:** Rigid plastic.
**Mounting Bushing (Micro-D):** Nickel-plated copper alloy.
**Mounting Bracket (Right-Angle Micro-D):** Nickel-plated copper alloy.
**Tip Spring:** Silver-plated copper alloy.
**Shunt Terminal:** Silver-plated copper alloy.
**Sleeve Terminal (Micro-D):** Steel, tin-plated.
**Sleeve Terminal (Right-Angle Micro-D):** Silver-plated copper alloy.
**Hardware (Micro-D):** Same as Micro-Jax (MDSL2A).
**Hardware (Right-Angle Micro-D):** Hex nut, nickel-plated copper alloy, **Number P15331**; flat washer, nickel-plated copper alloy **S29571**; not supplied with MDPC2A.

| Part No. | Jack Schem.[1] | Typical Mating Plug[2] | Part No. | Jack Schem.[1] | Typical Mating Plug[2] |
|---|---|---|---|---|---|
| TR2A<br>TR1PC<br>MDPC2A | III | 850 | MDSL2A<br>MDPC2ARA<br>MDSL2ARA | III | 850 |

All are 2-Conductor (closed circuit). Note 1.: See Jack Schematics page 79 and 80. Note 2.: See Plugs Section for mating information.

DIMENSIONS ARE FOR REFERENCE ONLY Inch (mm)

* Please visit the product pages on our website for the most up-to-date product information

# .101" SUBMINIATURE PHONE JACKS

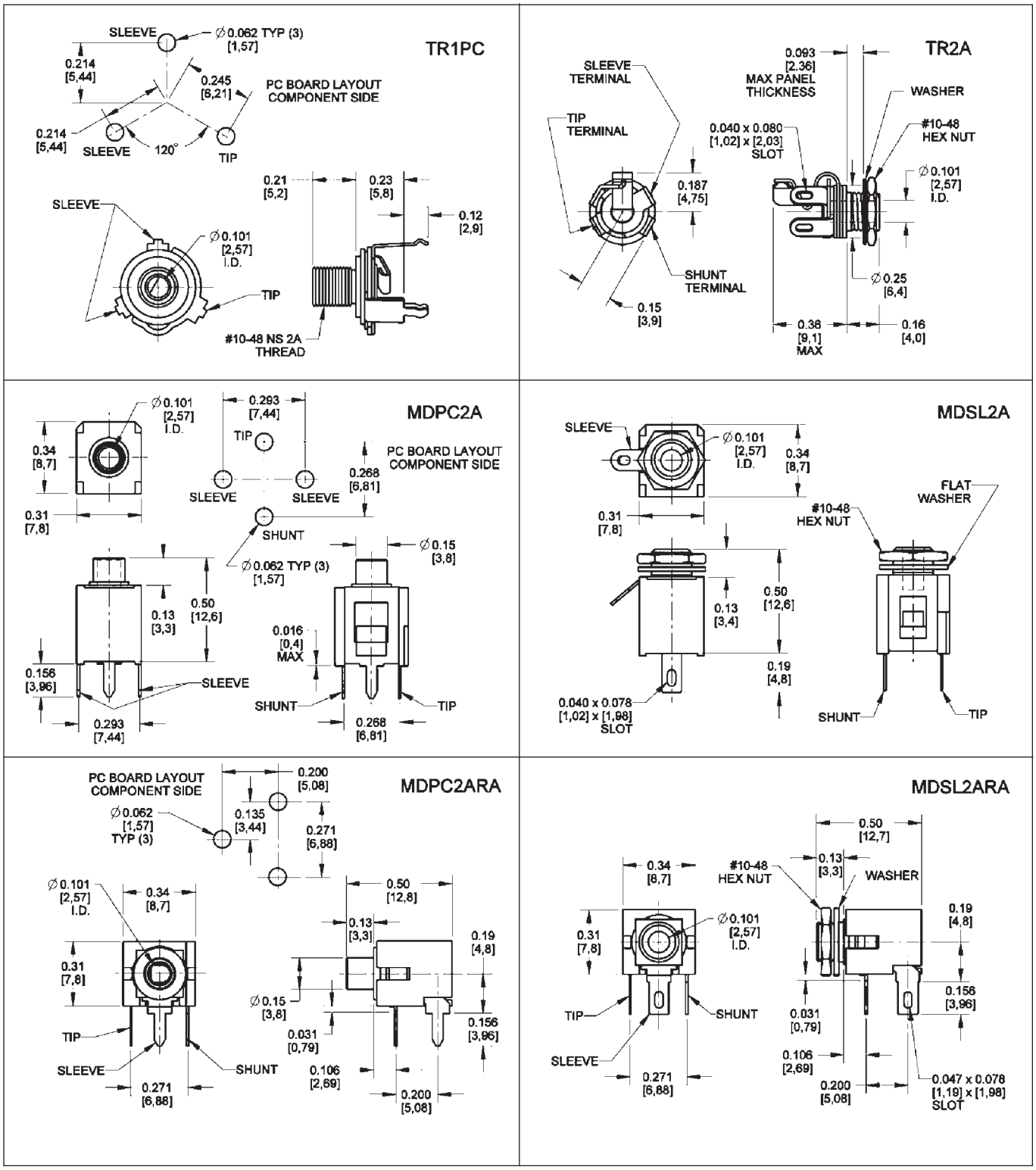


DIMENSIONS ARE FOR REFERENCE ONLY Inch (mm)



® Registered trademark of Switchcraft, Inc.
Note: Contact your Switchcraft Representative for price and delivery

* Please visit the product pages on our website for the most up-to-date product information

# BULKHEAD PHONO JACKS

3501F

3501FP

3501FR

3514PC

3515PC

3517PC

BPJR01

BPJF01

BPJJ01

3505F

3503

## FEATURES AND BENEFITS

- Front or rear mount configurations
- Durable plated machined brass construction
- All mounting hardware is included

## APPLICATIONS

- Audio
- Video
- General Purpose Electronics

## OPTIONS

- Front or rear mount solder type receptacles
- Jack to jack bulkhead configuration
- Insulator colors
- Gold or nickel plating

(See next page for drawings.)

## SPECIFICATIONS

**Material and Platings Housing:**
Nickel or Gold-plated Brass
**Contact:** Nickel-plated Brass **Insulator:** ABS
**Hardware:** Nickel-plated Brass. Switchcraft introduces a complete line of bulkheadmount phono (RCA) jacks to meet the most critical audio, audio/video, and general-purpose electronic applications. These jacks are offered in front and rear mount solder type as well as jack to jack bulkhead configurations. These jacks are available with black, white, blue, green, red, and yellow insulators and nickel or gold plated bodies. All mounting hardware is included.
**Housing:** Nickel or gold plated, copper alloy
(3514PC, 3515PC, 3517PC: Nickel plated, steel)
**Terminals:** Nickel plated, copper alloy (3515PC: Tin plated, copper alloy)
**Bushing:** Nickel-plated, copper alloy (3515PC: Ceramic)
**Insulators:** Thermoplastic
(3517PC: Ceramic and glass filled thermoplastic)

| Part Number | Description |
|---|---|
| BPJR01 | Rear mount, black insulator |
| BPJR01AU | Rear mount, black insulator, gold plated |
| BPJR02 | Rear mount, red insulator |
| BPJR02AU | Rear mount, red insulator, gold plated |
| BPJR03 | Rear mount, white insulator |
| BPJR03AU | Rear mount, white insulator, gold plated |
| BPJR04 | Rear mount, yellow insulator |
| BPJR04AU | Rear mount, yellow insulator, gold plated |
| BPJR05 | Rear mount, blue insulator |
| BPJR05AU | Rear mount, blue insulator, gold plated |
| BPJR06 | Rear mount, green insulator |
| BPJR06AU | Rear mount, green insulator, gold plated |
| 3501F | Rear mount, rigid plastic mounting flange |
| 3501FR | Rear mount, natural insulator |
| For insulated mounting, order S1028 and S1029 insulating washers | |
| BPJF01 | Front mount, black insulator |
| BPJF01AU | Front mount, black insulator, gold plated |
| BPJF02 | Front mount, red insulator |
| BPJF02AU | Front mount, red insulator, gold plated |
| BPJF03 | Front mount, white insulator |
| BPJF03AU | Front mount, white insulator, gold plated |
| BPJF04 | Front mount, yellow insulator |
| BPJF04AU | Front mount, yellow insulator, gold plated |

| Part Number | Description |
|---|---|
| BPJF05 | Front mount, blue insulator |
| BPJF05AU | Front mount, blue insulator, gold plated |
| BPJF06 | Front mount, green insulator |
| BPJF06AU | Front mount, green insulator, gold plated |
| 3501FP | Front Mount, natural insulator |
| 3505F | RF version, uses low-loss nylon insulation |
| For insulated mounting, order S2207 and S1564 insulating washers | |
| BPJJ01 | Feed through, black insulator |
| BPJJ01AU | Feed through, black insulator, gold plated |
| BPJJ02 | Feed through, red insulator |
| BPJJ02AU | Feed through, red insulator, gold plated |
| BPJJ03 | Feed through, white insulator |
| BPJJ03AU | Feed through, white insulator, gold plated |
| BPJJ04 | Feed through, yellow insulator |
| BPJJ04AU | Feed through, yellow insulator, gold plated |
| BPJJ05 | Feed through, blue insulator |
| BPJJ05AU | Feed through, blue insulator, gold plated |
| BPJJ06 | Feed through, green insulator |
| BPJJ06AU | Feed through, green insulator, gold plated |
| 3503 | Extension jack, shielded handle |
| 3514PC | Vertical PC mount, nickel plated steel bushing |
| 3515PC | Vertical PC mount, ceramic bushing |
| 3517PC | Horizontal PC mount, nickel plated steel bushing |

DIMENSIONS ARE FOR REFERENCE ONLY Inch (mm)

* Please visit the product pages on our website for the most up-to-date product information

## PHONO JACKS (continued)

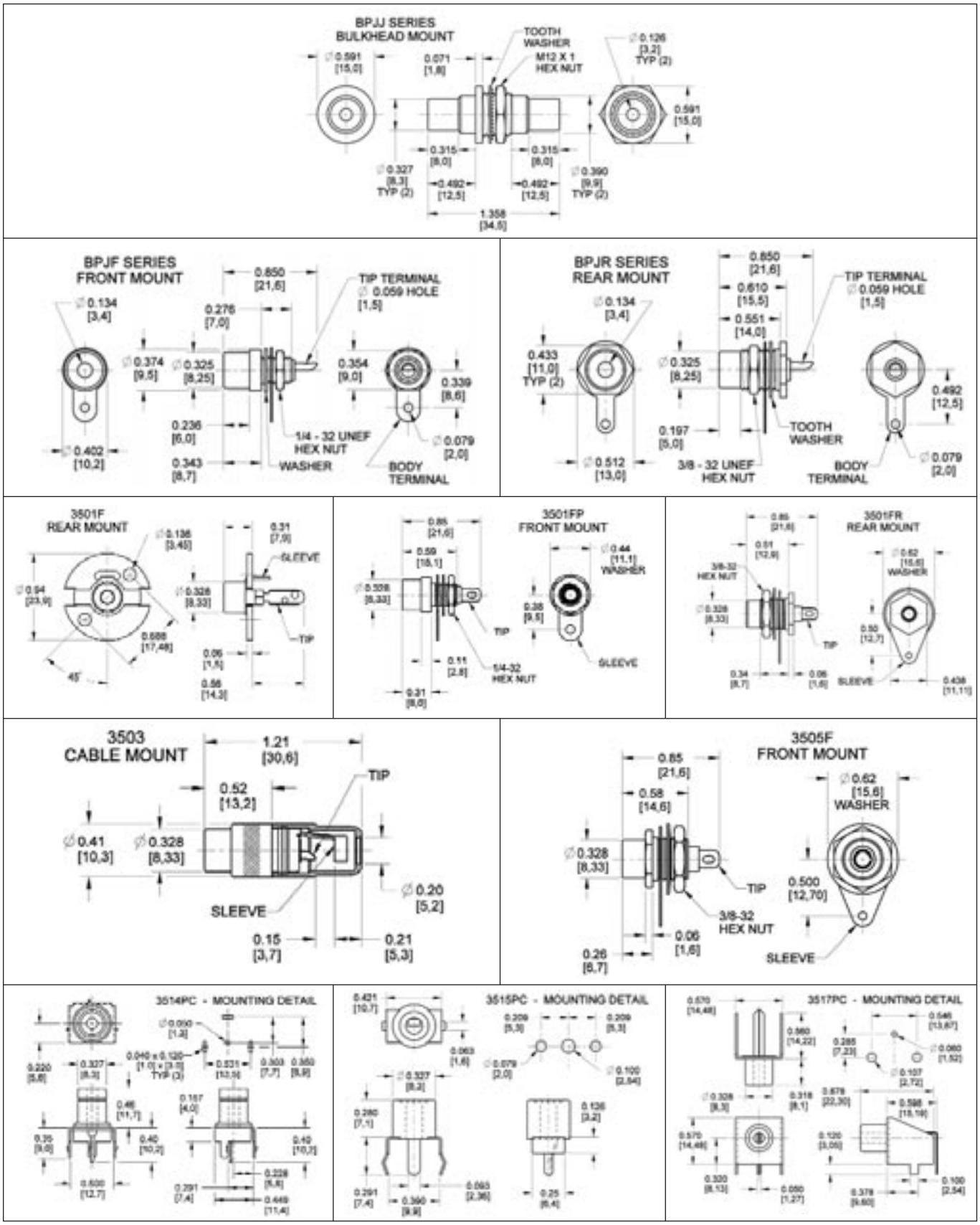


DIMENSIONS ARE FOR REFERENCE ONLY Inch / (mm)



® Registered trademark of Switchcraft, Inc.

Note: Contact your Switchcraft Representative for price and delivery

* Please visit the product pages on our website for the most up-to-date product information

# PHONO JACKS AND PHONO JACK SETS

PJRAN1X1U03

PJRAS1X1S04

PJRAS1X2S02

PJRAN2X1U02

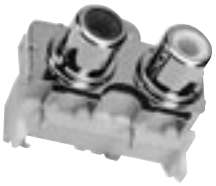
PJRAS2X1S01

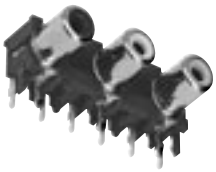
PJRAN3X1U03

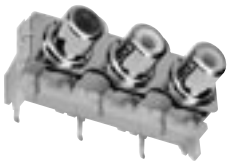
PJRAS3X1S01

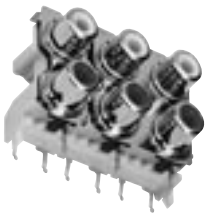
PJRAS3X2S01

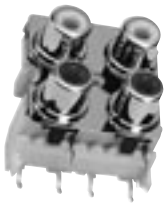
PJRAS2X2S01

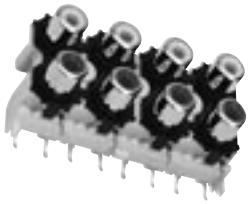
PJRAS4X2U01

PJRAS1X3S01

PJRAN3X1U02

PJRAS1X3U01

Switchcraft, the industry recognized leader in audio-video connectivity, introduces the addition of a comprehensive line of PCB Mount RCA Jacks and Jack Sets. Switchcraft's newest product family addresses the requirements of the most critical audio and audio/video applications. 1, 2, 3, 4, 6, and 8 position jack sets are offered in a variety of color combinations with numerous plating, grounding, shielding, mounting, and justification options.

## FEATURES AND BENEFITS
- High temperature plastic housings and long life contacts
- Snap fit PCB contacts and housings
- Low profile footprint
- Numerous options and configurations

## APPLICATIONS
- Audio
- Video
- General Purpose Electronics

## OPTIONS
- Right angle and straight PCB mount
- Horizontal and vertical justification
- Shielding and grounding
- Bulkhead mounting screw
- Colors
- Plating

## SPECIFICATIONS
### ELECTRICAL
**Temperature Range:** -25 to +80°C
**Rated Voltage:** 34V DC or AC
**Withstand Voltage:** 500V
**Rated Current:** 2A DC or AC
**Dielectric Strength:** 500V AC @ 1 minute
**Contact Resistance:** <30 mohms
**Insertion Force*:** <29.4N
**Extraction Force*:** 1N to 29.4N
* Depends Upon Mating Plug

### MATERIAL AND PLATINGS
**Housing:** UL94-HB Rated, ABS
**Insulators:** ABS
**Ground Shell and Terminal:** Nickel or Gold Plated, Copper Alloy
**Terminals:** Tin Plated Copper Alloy

DIMENSIONS ARE FOR REFERENCE ONLY Inch (mm)

* Please visit the product pages on our website for the most up-to-date product information

# PHONO JACKS AND PHONO JACK SETS (continued)

### 1 POSITION PCB MOUNT

| Part Number | Color |
|---|---|
| PJRAN1X1U01 | Black |
| PJRAN1X1U02 | White |
| PJRAN1X1U03 | Red |
| PJRAN1X1U04 | Yellow |
| Call factory | Green |
| Call factory | Blue |
| PJRAS1X1S01 | Black |
| PJRAS1X1S02 | White |
| PJRAS1X1S03 | Red |
| PJRAS1X1S04 | Yellow |
| Call factory | Green |
| Call factory | Blue |

### 3 POSITION PCB MOUNT

| Part Number | Color |
|---|---|
| PJRAN3X1U01 | Red/Yellow/White |
| PJRAN3X1U02 | Red/Green/Blue |
| PJRAS3X1S01 | Red/White/Yellow |
| PJRAS3X1U03 | Red/Green/Blue |
| PJRAS1X3S01 | Red<br>White<br>Yellow |
| PJRAS1X3S02 | Green<br>Blue<br>Red |

### 2 POSITION PCB MOUNT

| Part Number | Color |
|---|---|
| PJRAN2X1U01 | Red/White |
| PJRAN2X1U02 | White/Red |
| PJRAS2X1S01 | Red/White |
| PJRAS2X1S02 | White/Red |
| PJRAS1X2S01 | Red<br>White |
| PJRAS1X2S02 | White<br>Red |

### 4, 6, & 8 POSITION PCB MOUNT

| Part Number | Color |
|---|---|
| PJRAS2X2S01 | White x 2<br>Red x 2 |
| PJRAS3X2S01 | White x 3<br>Red x 3 |
| PJRAS3X2S02 | Red/White/Yellow<br>Red/White/Yellow |
| PJRAS4X2U01 | White x 4<br>Red x 4 |

### COMBINATION PHONO AND S-VIDEO PCB MOUNT

| Part Number | Color |
|---|---|
| PJRAN3X1U02 | Red/White/Yellow |
| PJRAS1X3U01 | Yellow<br>White<br>Red |

**Ordering Information (Contact factory for color, shielding, grounding, justification options.)**

| PJ | RA | S | # | X | # | S | 01 | AU |
|---|---|---|---|---|---|---|---|---|
| Product Type | Justification | Mounting | Positions Horizontal | | Positions Vertical | Shielding | Version | Ground Shell Plating |
| Phono Jack | RA - Right Angle<br>ST - Straight | S - Screw(s)<br>N - No Screws | 1,2,3, or 4 | By | 1,2, or 3 | S - Shielded<br>U - Unshielded | | AU/Gold |

DIMENSIONS ARE FOR REFERENCE ONLY Inch (mm)


® Registered trademark of Switchcraft, Inc.
Note: Contact your Switchcraft Representative for price and delivery

* Please visit the product pages on our website for the most up-to-date product information

## PHONO JACKS AND PHONO JACK SETS (continued)

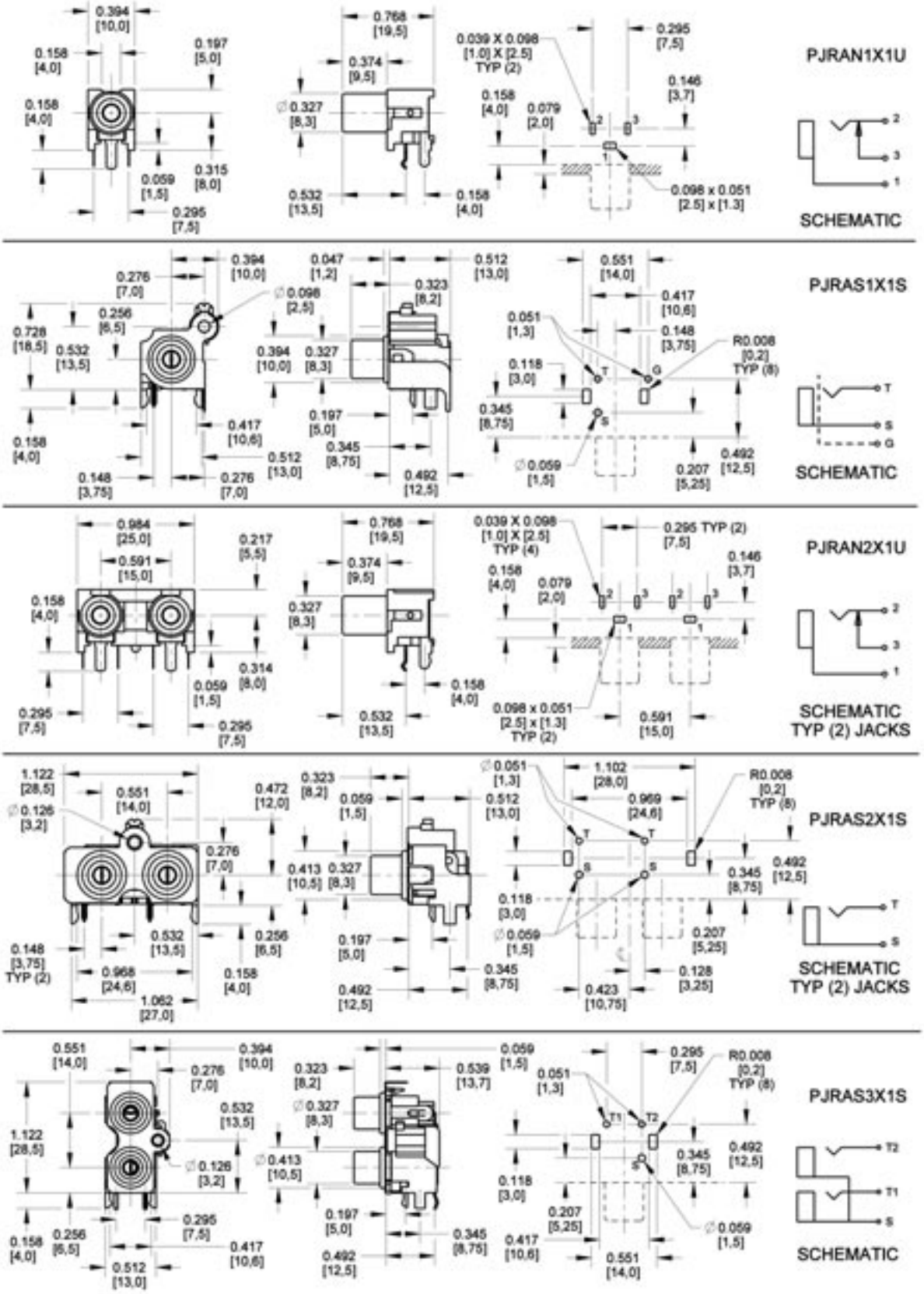


DIMENSIONS ARE FOR REFERENCE ONLY Inch (mm)

* Please visit the product pages on our website for the most up-to-date product information

## PHONO JACKS AND PHONO JACK SETS (continued)

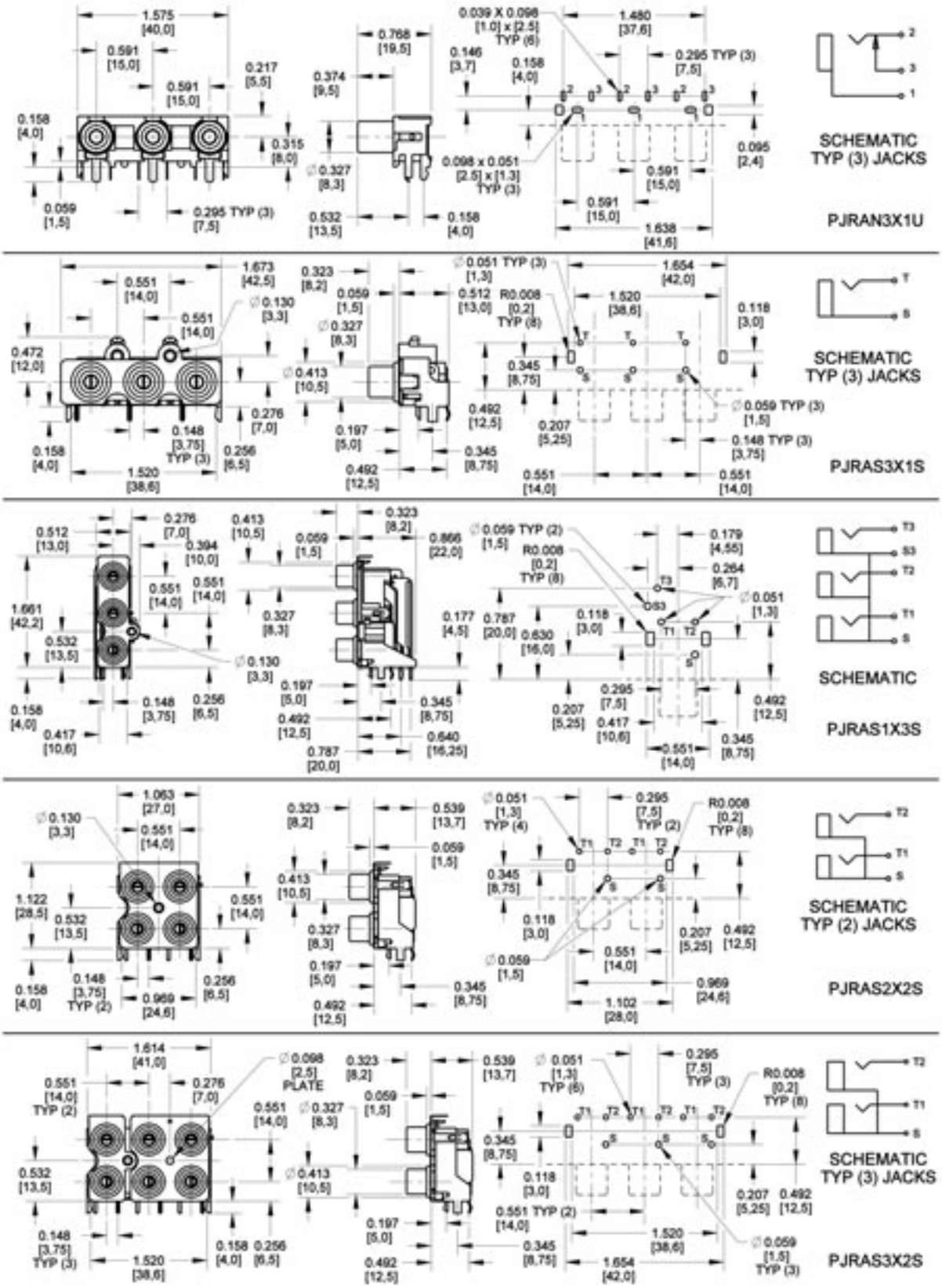


DIMENSIONS ARE FOR REFERENCE ONLY Inch (mm)



® Registered trademark of Switchcraft, Inc.

Note: Contact your Switchcraft Representative for price and delivery

* Please visit the product pages on our website for the most up-to-date product information

## PHONO JACKS AND PHONO JACK SETS (continued)

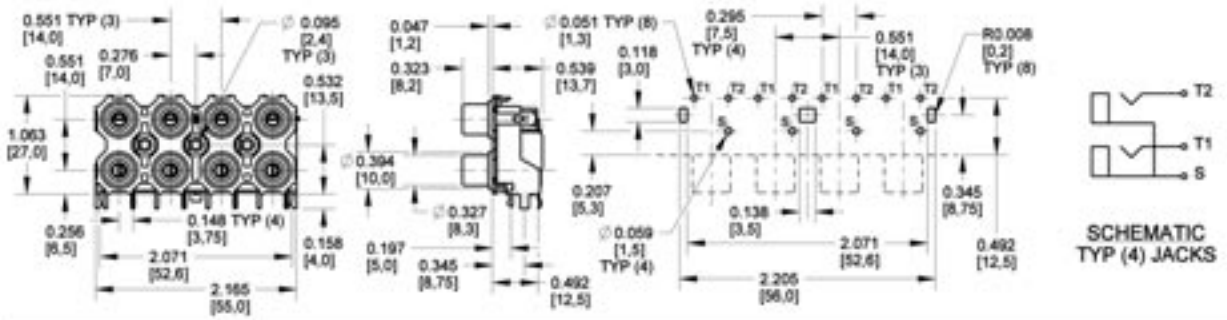


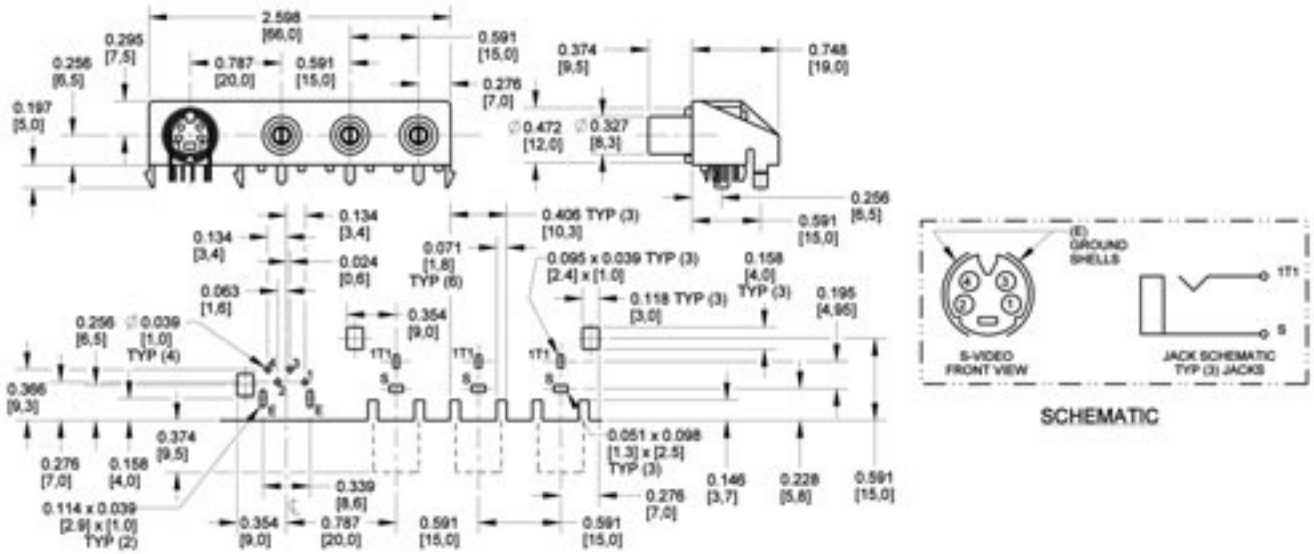


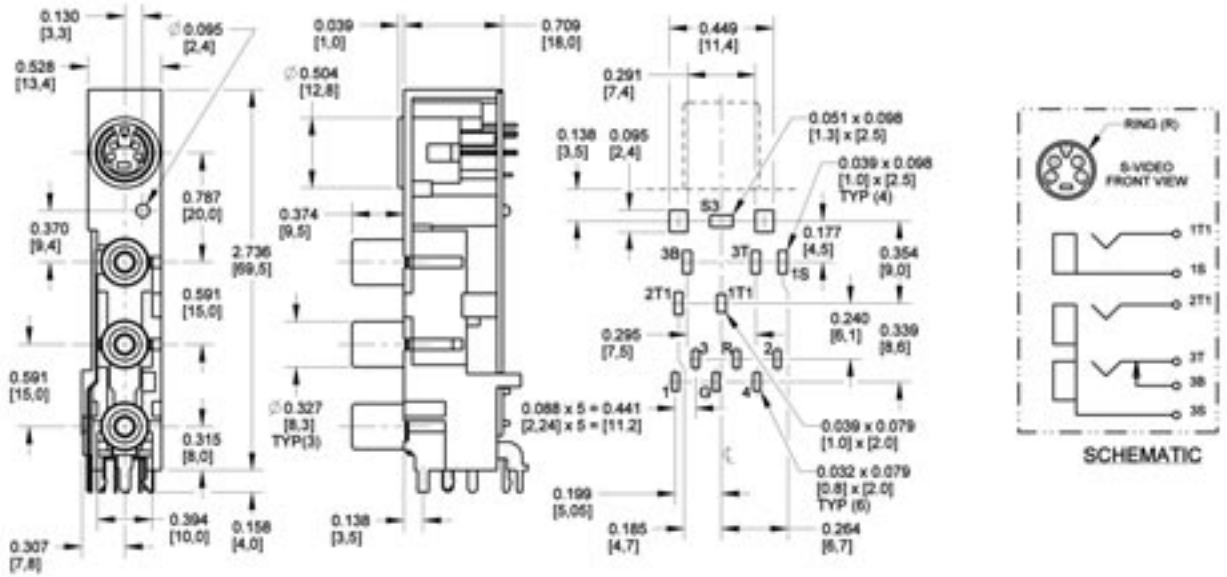


DIMENSIONS ARE FOR REFERENCE ONLY Inch (mm)

* Please visit the product pages on our website for the most up-to-date product information

# RIGHT ANGLE MINIATURE POWER JACKS

RASM 712

RASM 722

RASM 732P

RAPC732OF

RAPC742

RASM752STR

RASM752TR

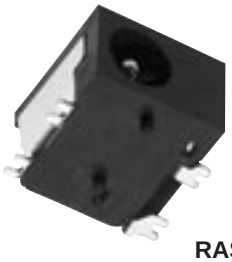
RASM742TR

## SPECIFICATIONS:

**Materials:** Housing: Thermoplastic
**Terminals:**
RAPC700:
**Sleeve:** Silver plated copper alloy
**Tip:** Nickel plated, copper alloy
RAPC742, RASM742TR, RAPC732OF, RAPC742OF, RAPC752, RAPC752S, RASM752TR, RASM752STR:
**Sleeve and tip:** Silver plated tin
**Shunt:** Silver plated copper alloy
RASM700, RASH700:
**Sleeve:** Tin plated copper alloy
**Tip:** Nickel plated copper alloy)

## ELECTRICAL

**Current Rating:** 3A
(RAPC700, RASH700, RASM700: 5A)
**Contact Resistance:** <50 mohms
**Insulation Resistance:** 100 mohms min.
(RAPC700, RASH700, RASM700: 30 megohms @100V DC)
**Dielectric Withstanding Voltage:** 250 VAC@ 1 minute

## MECHANICAL:

**Lifecycles:** 5,000 min.

| Part Number | Pin Size* | Description |
|---|---|---|
| **RAPC712** | 0.100"/2.5mm | Right Angle, PC mount |
| **RASH712** | 0.100"/2.5mm | Right Angle, hybrid mount |
| **RASM712** | 0.100"/2.5mm | Right Angle, SMT mount |
| **RAPC722** | 0.080"/2.0mm | Right Angle, PC mount |
| **RASH722** | 0.080"/2.0mm | Right Angle, hybrid mount |
| **RASM722** | 0.080"/2.0mm | Right Angle, SMT mount |
| **RAPC732** | 0.050"/1.3mm | Right Angle, PC mount |
| **RAPC732OF** | 0.050"/1.3mm | Right Angle, PC mount[1] |
| **RASH732** | 0.050"/1.3mm | Right Angle, SMT mount |
| **RASM732** | 0.050"/1.3mm | Right Angle, hybrid mount |
| **RAPC742** | 0.040"/1.0mm | Right Angle, PC mount |
| **RAPC742OF** | 0.040"/1.0mm | Right Angle, PC mount[1] |
| **RASM742TR** | 0.040"/1.0mm | Right Angle, SMT mount[2] |
| **RAPC752** | 0.025"/0.65mm | Right Angle, PC mount |
| **RAPC752S** | 0.025"/0.65mm | Right Angle, PC mount[3] |
| **RASM752TR** | 0.025"/0.65mm | Right Angle, SMT mount[2] |
| **RASM752STR** | 0.025"/0.65mm | Right Angle, SMT mount[4] |

Note: Contact factory for specific information on tape and reel options. *Pin Size (in/mm) 1. Open Frame 2. Tape and Reel. 3. Shielded 4. Tape and Reel, Shielded.
Note: Available with P locating post as an option.
Note: Available with tin-plating as a special order.
Note: Available with Hi-temp material, contact factory for details.

DIMENSIONS ARE FOR REFERENCE ONLY Inch/(mm)


® Registered trademark of Switchcraft, Inc.
Note: Contact your Switchcraft Representative for price and delivery

* Please visit the product pages on our website for the most up-to-date product information

## RIGHT ANGLE MINIATURE POWER JACKS (continued)

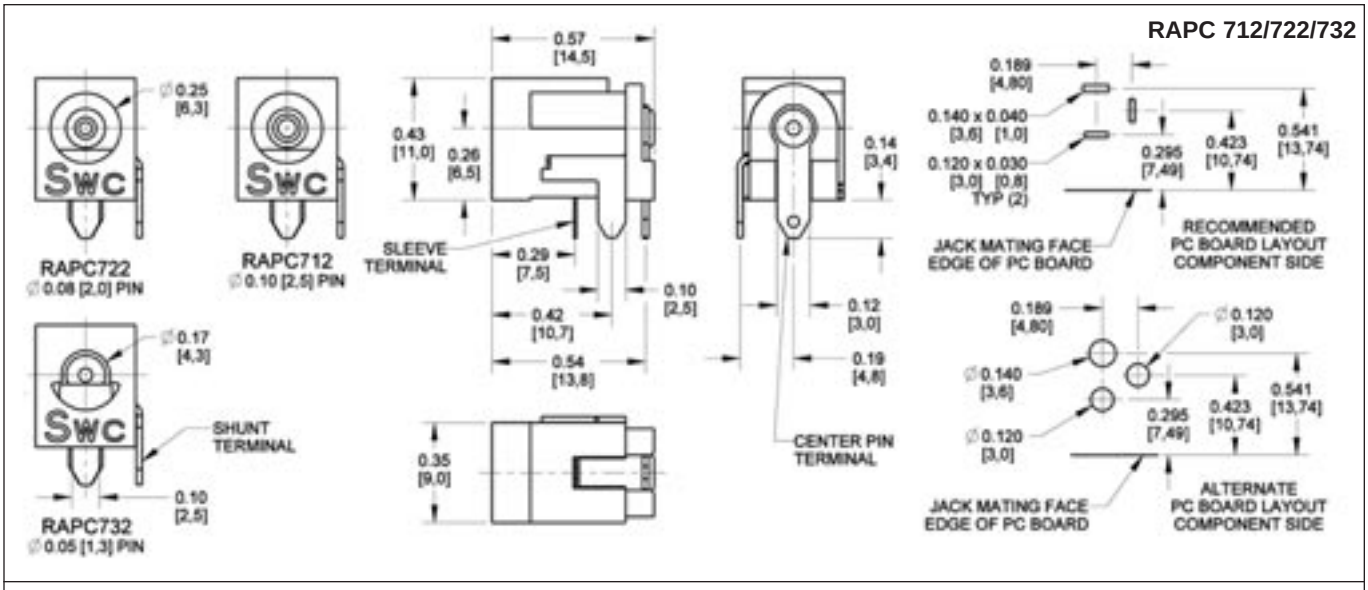


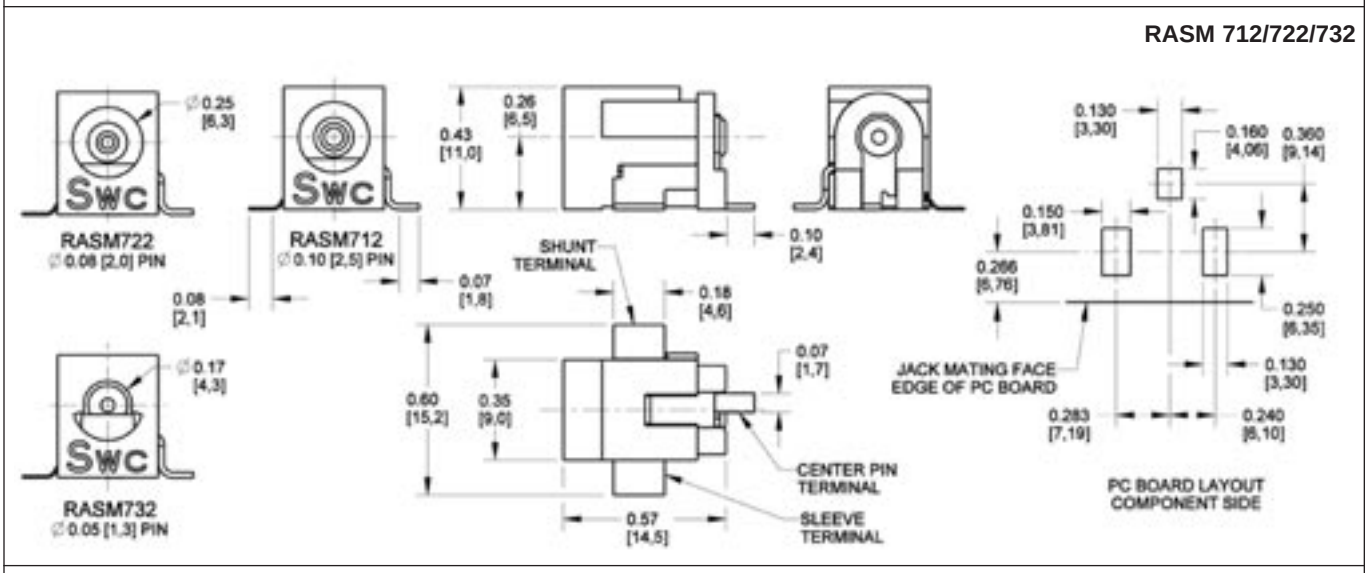


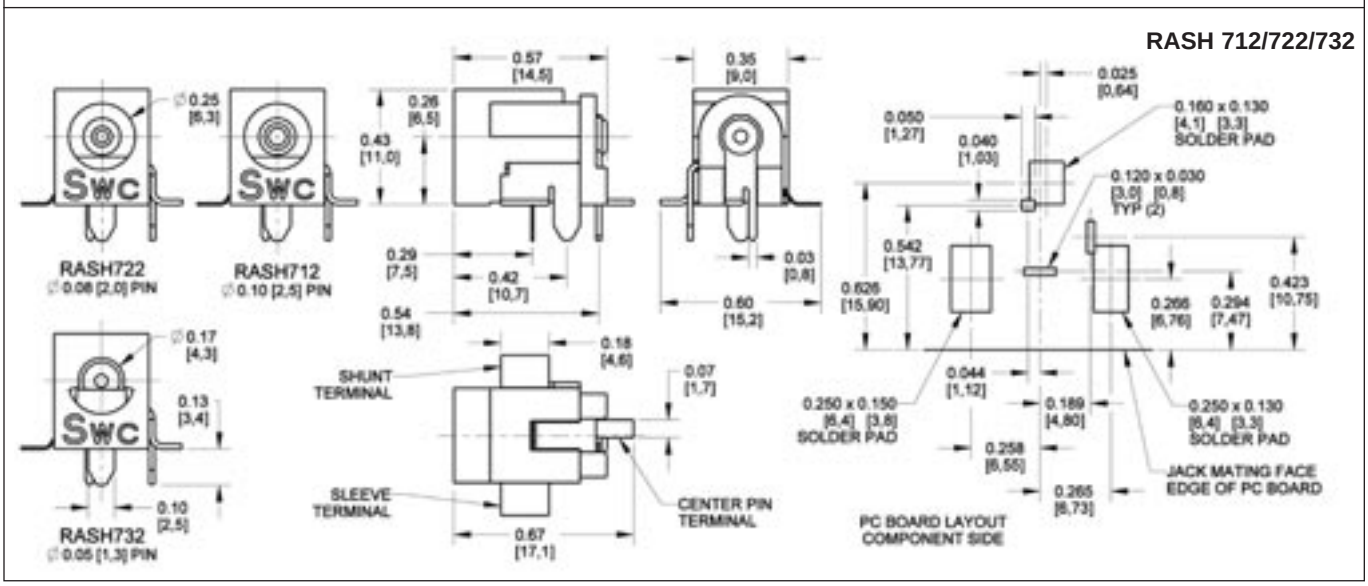


DIMENSIONS ARE FOR REFERENCE ONLY Inch (mm)

* Please visit the product pages on our website for the most up-to-date product information

## RIGHT ANGLE MINIATURE POWER JACKS (continued)

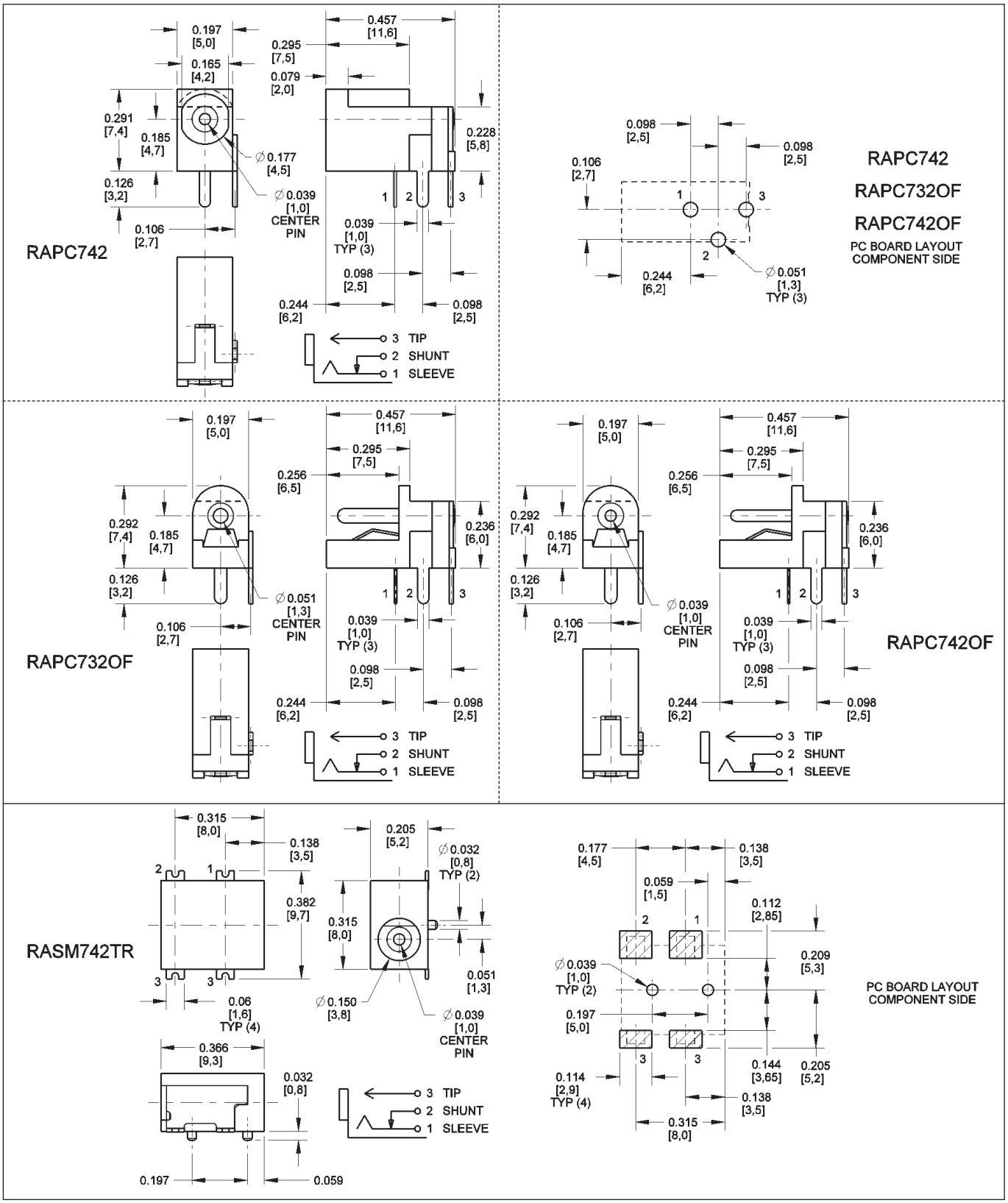


DIMENSIONS ARE FOR REFERENCE ONLY Inch (mm)


® Registered trademark of Switchcraft, Inc.
Note: Contact your Switchcraft Representative for price and delivery

* Please visit the product pages on our website for the most up-to-date product information

## RIGHT ANGLE MINIATURE POWER JACKS (continued)

### RAPC752

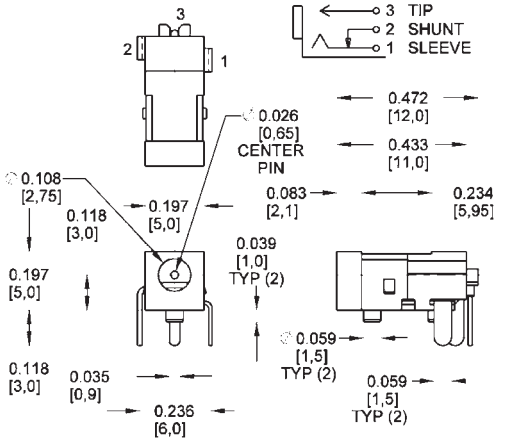


**PC BOARD LAYOUT**
**COMPONENT SIDE**

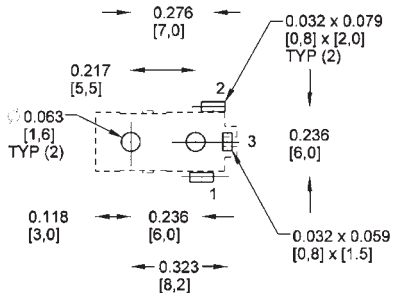


### RASM752TR

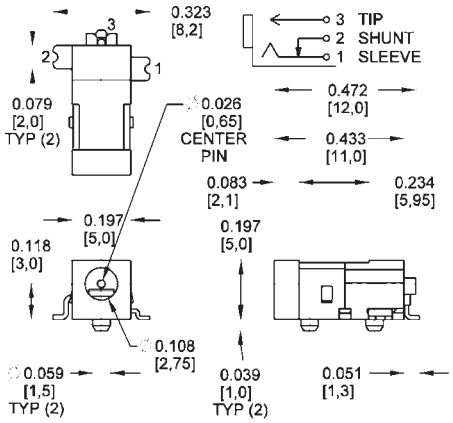


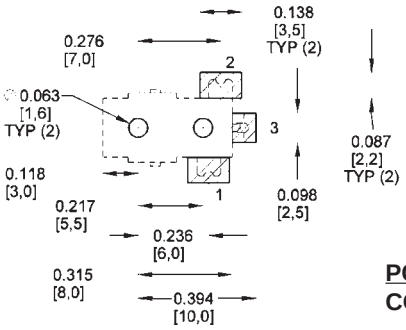


**PC BOARD LAYOUT**
**COMPONENT SIDE**

### RAPC752S

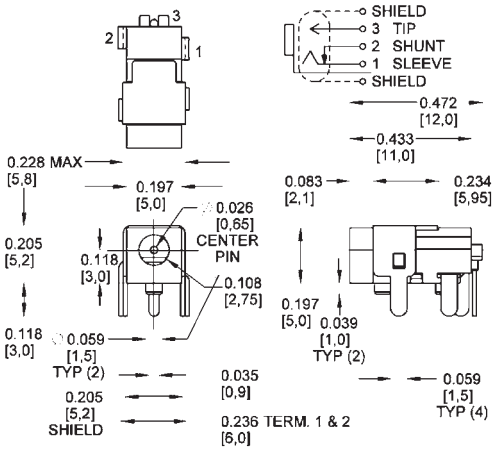


**PC BOARD LAYOUT**
**COMPONENT SIDE**

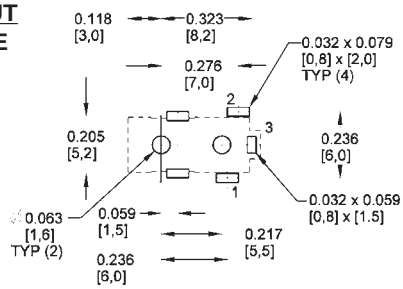


### RASM752STR

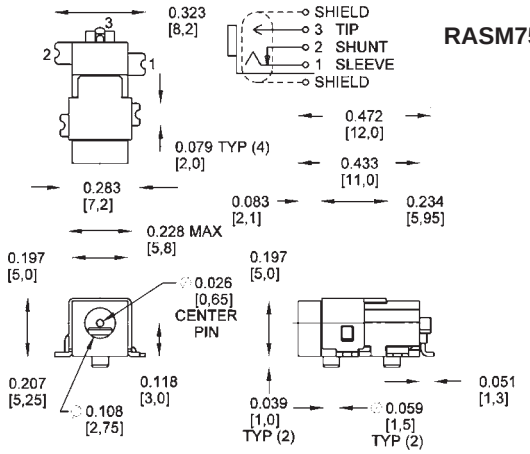


**PC BOARD LAYOUT**
**COMPONENT SIDE**

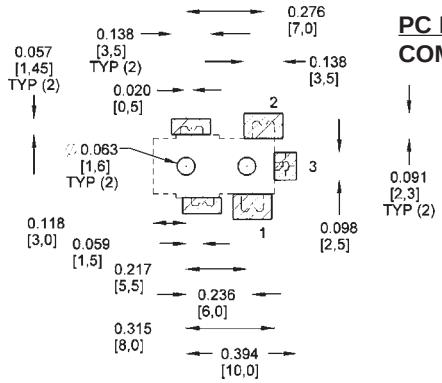


DIMENSIONS ARE FOR REFERENCE ONLY Inch (mm)

* Please visit the product pages on our website for the most up-to-date product information

# STRAIGHT MINIATURE POWER JACKS

712A

PC712A

L722A

2C1072

L712RA

## FEATURES:

- Automatic switch over from AC to DC permitted by sleeve shunt spring.
- Split center pin shaped to hold mating plug firmly.
- Bushing length available as 0.219" or extended 0.319" to permit use in thicker panels.
- Non-turn mounting possible using standard "D" shape bushing.
- Insulated mounting hardware available.
- Right angle versions offer "kinked" PC terminals for added board retention.

## MATERIALS:

**Housing:** Thermoplastic
**Bushing:** Plated copper alloy
**Terminals:** Plated copper alloy
**Insulators:** Rigid Plastic
**Hardware:** Supplied with one P2439 nickel plated copper alloy hex nut, and one P2441 nickel plated steel flat washer

## ELECTRICAL:

**Current Rating:** 5A, 12V DC resistive
**Contact Resistance:** 0.01 Ohms max. (initial), 0.02 Ohms max. (after humidity, durability exposure), 0.10 Ohms max. (after salt spray)
**Insulation Resistance:** 10,000 Mohms min. (initial), 1,000 Mohms min. (after humidity, durability exposure)
**Dielectric Withstanding Voltage:** 500 VAC max.

## MECHANICAL:

**Lifecycles:** 10,000 cycles min.

| Part Number | Pin Size* | Description | Typical Mating Plug |
|---|---|---|---|
| **712A** | 0.100"/2.5mm | Solder lugs | 760 |
| **712RA** | 0.100"/2.5mm | Right angle PC terminals | 760 |
| **L712A** | 0.100"/2.5mm | Solder lugs, long bushing | 761K |
| **L712RA** | 0.100"/2.5mm | Right angle PC terminals, long bushing | 761K |
| **PC712A** | 0.100"/2.5mm | Straight PC terminals | 760 |
| **PCL712A** | 0.100"/2.5mm | Straight PC terminals, long bushing | 761K |
| **722A** | 0.080"/2.0mm | Solder lugs | S760 |
| **722RA** | 0.080"/2.0mm | Right angle PC terminals, long bushing | S760 |
| **L722A** | 0.080"/2.0mm | Solder lugs, long bushing | S761K |
| **L722RA** | 0.080"/2.0mm | Right angle PC terminals, long bushing | S761K |
| **PC722A** | 0.080"/2.0mm | Straight PC terminals | S760 |
| **PCL722A** | 0.080"/2.0mm | Straight PC terminals, long bushing | S761K |
| **732A** | 0.050"/1.3mm | Solder lugs | 860 |
| **732RA** | 0.050"/1.3mm | Right angle PC terminals | 860 |
| **PC732A** | 0.050"/1.3mm | Straight PC terminals | 860 |
| **2C1072** | | Jack covers for 712A and 722A | |

Note: For insulated mounting order **P2442** phenolic flat washer and **S4263** swedged fiber washer.

DIMENSIONS ARE FOR REFERENCE ONLY Inch (mm)


® Registered trademark of Switchcraft, Inc.
Note: Contact your Switchcraft Representative for price and delivery

* Please visit the product pages on our website for the most up-to-date product information

## STRAIGHT MINIATURE POWER JACKS (continued)

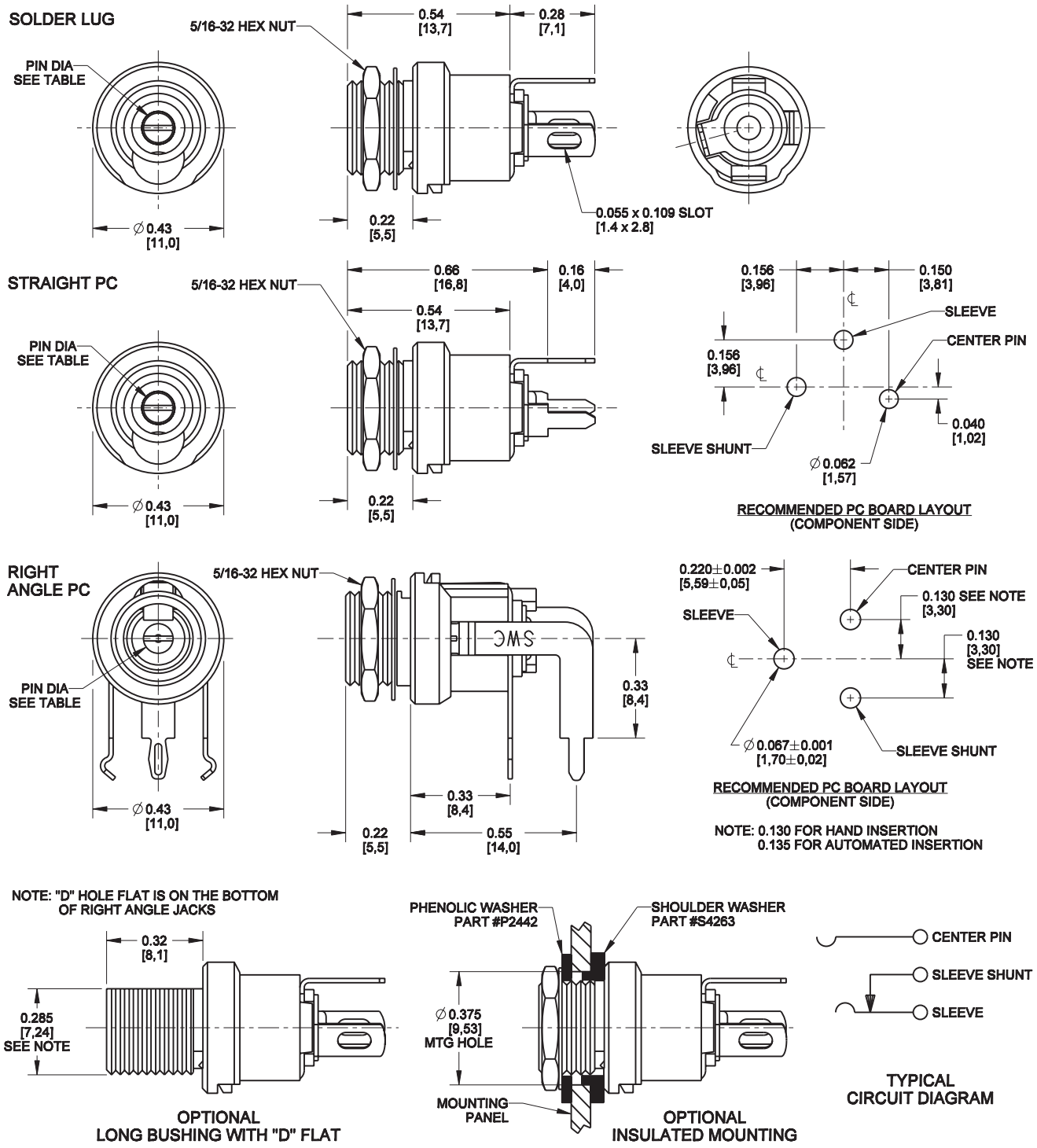


DIMENSIONS ARE FOR REFERENCE ONLY Inch / (mm)

* Please visit the product pages on our website for the most up-to-date product information

# VJ SERIES

See page 193 for Patch panel information.

VJHD*75TX

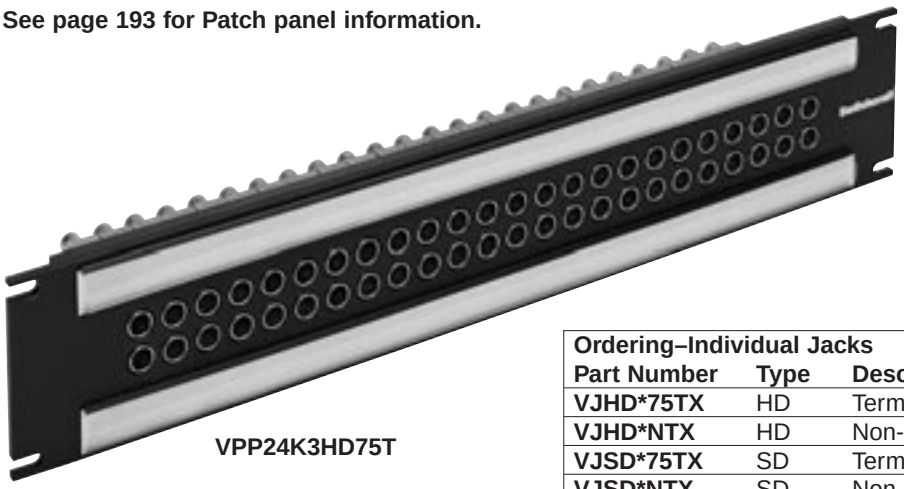

VPP24K3HD75T

| Ordering–Individual Jacks | | |
|---|---|---|
| **Part Number** | **Type** | **Description** |
| **VJHD*75TX** | HD | Terminated |
| **VJHD*NTX** | HD | Non-terminated |
| **VJSD*75TX** | SD | Terminated |
| **VJSD*NTX** | SD | Non-terminated |
| *Add "N" for non-normalled version | | |

## FEATURES AND BENEFITS

- HD Series meets SMPTE 292M Specifications
- SD Series has a bandwidth from DC to 1.75GHz
- Jacks feature rugged heavy duty housings

## VIDEO JACK SPECIFICATIONS

### ELECTRICAL

**Rated Bandwidth:** 2.4 GHz (HD), 1.75 GHz (SD)
**Characteristic Impedance:** 75 ohms
**Return Loss:** Better than –15 dB
**Insertion Loss:** Better than –.5 dB
**Contact Resistance:** Less than 20 milliohms
**Termination Resistance:** 75 W, ±1%
**Center Conductor:** Accepts .090 pin diameter

### MECHANICAL

**Mechanical Shock:** Per MIL-STD-202, Method 213, Test condition I
**Vibration:** Per MIL-STD-202, Method 201
**Insertion Force:** 12 lbs. maximum
**Withdrawal Force:** 3 lbs. minimum
**Life Cycle:** 30,000

### MATERIAL

**Housing:** Zinc alloy, nickel plated
**Center Contacts:** Copper alloy, gold plated
**Switching Springs:** Copper alloy, gold plated
**Grounding Contacts:**
HD Series - Copper alloy, gold plated
SD Series - Copper alloy, nickel plated
**Insulators:** Thermoplastic, UL 94V-0 rated

### ENVIRONMENTAL

**Operating Temperature:** – 40ºC to 65ºC
**Storage Temperature:** – 55ºC to 85ºC
**Thermal Shock:** Per MIL-STD-202, Method 107
**Moisture and Humidity:**
Per MIL-STD-202, Method 106.
The HD Series meets SMPTE 292M specifications for high definition video signaling, covering a bandwidth range from DC to 2.4GHz. The SD Series is perfect for serial digital, with a bandwidth from DC to 1.75GHZ.

**SMITH CHART (TYPICAL)**

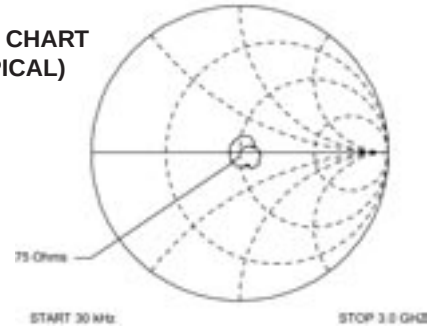


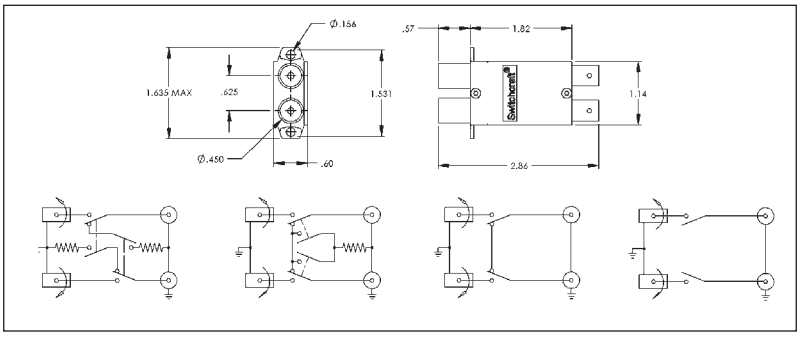


NON-NORMALLED TERMINATED | NORMALLED TERMINATED | NORMALLED NON-TERMINATED | NON-NORMALLED NON-TERMINATED

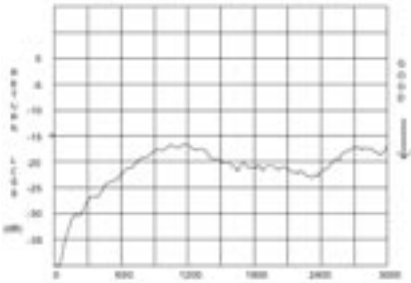

FREQUENCY (MHz)

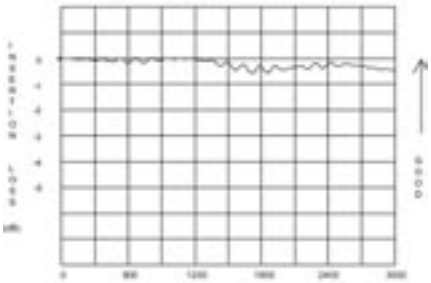

FREQUENCY (MHz)

DIMENSIONS ARE FOR REFERENCE ONLY Inch (mm)



® Registered trademark of Switchcraft, Inc.
Note: Contact your Switchcraft Representative for price and delivery

* Please visit the product pages on our website for the most up-to-date product information

# MVJ SERIES

See page 196 for Patch panel information.

MVJ*75T

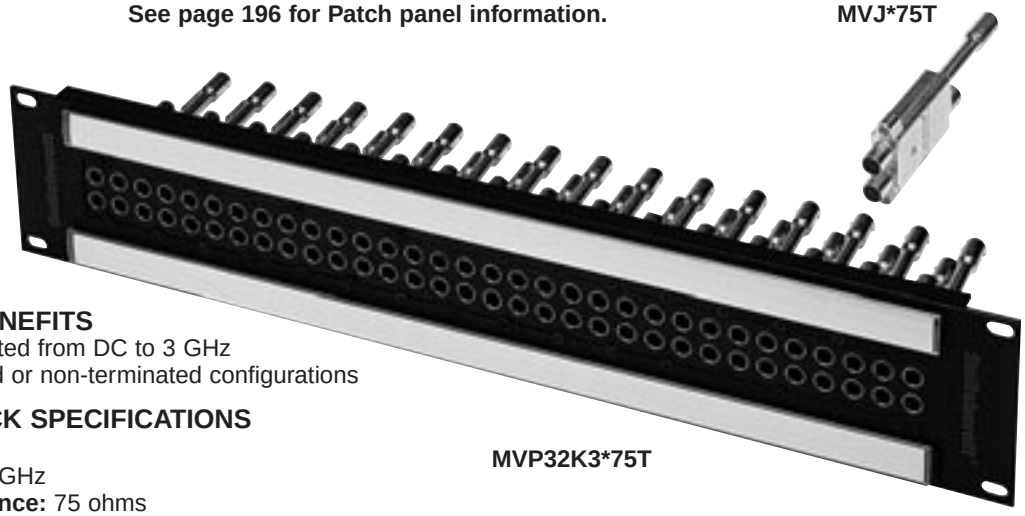

MVP32K3*75T

## FEATURES AND BENEFITS
- Midsize video jacks rated from DC to 3 GHz
- Available in terminated or non-terminated configurations

## MIDSIZE VIDEO JACK SPECIFICATIONS

### ELECTRICAL
**Rated Bandwidth:** 3.0 GHz
**Characteristic Impedance:** 75 ohms
**Return Loss:** See Typical Return Loss Chart
**Insertion Loss:** See Typical Insertion Loss Chart
**Contact Resistance:** Less than 20 milliohms
**Termination Resistance:** 75 W, ±1%
**Center Conductor:** Accepts .048 pin diameter

### MECHANICAL
**Mechanical Shock:** Per MIL-STD-202, Method 213, Test condition I
**Vibration:** Per MIL-STD-202, Method 201
**Insertion Force:** 12 lbs. maximum
**Withdrawal Force:** 3 lbs. minimum
Life Cycle: 30,000

### MATERIAL
**Housing:** Zinc alloy, nickel plated
**Center Contacts:** Copper alloy, gold plated
**Switching Springs:** Copper alloy, gold plated
**Grounding Contacts:** Copper alloy, gold plated
**BNC Insulators:** Teflon
**Actuators:** Thermoplastic, UL94V-0 rated

### ENVIRONMENTAL
**Operating Temperature:** – 40ºC to 65ºC
**Storage Temperature:** – 55ºC to 85ºC
**Thermal Shock:** Per MIL-STD-202, Method 107
**Moisture and Humidity:** Per MIL-STD-202, Method 106

**Ordering Information**

| Part Number | Jack | Description |
|---|---|---|
| **MVJ*75T** | HD | Terminated |
| **MVJ*NT** | HD | Non-terminated |

*Add "N" for non-normalled version

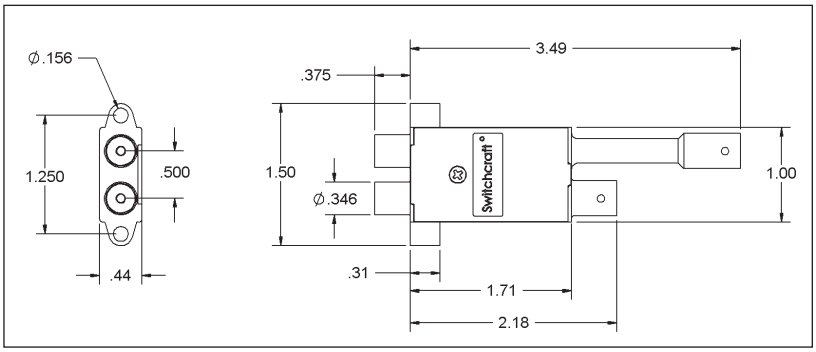


**SMITH CHART (TYPICAL)**

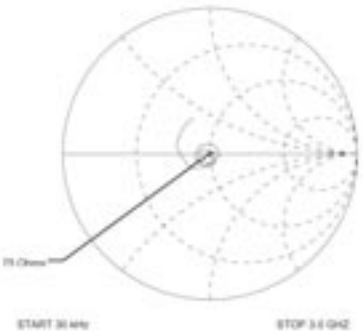

**RETURN LOSS (TYPICAL)**

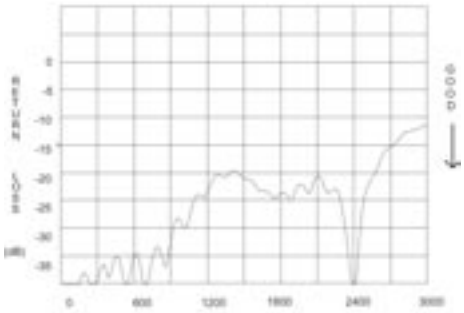

FREQUENCY (MHz)

**RETURN LOSS (TYPICAL)**

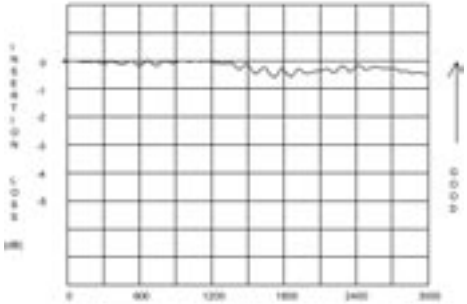

FREQUENCY (MHz)

DIMENSIONS ARE FOR REFERENCE ONLY Inch (mm)

* Please visit the product pages on our website for the most up-to-date product information

# MIL-TYPE 1/4" PHONE PLUGS

## 2-CONDUCTOR

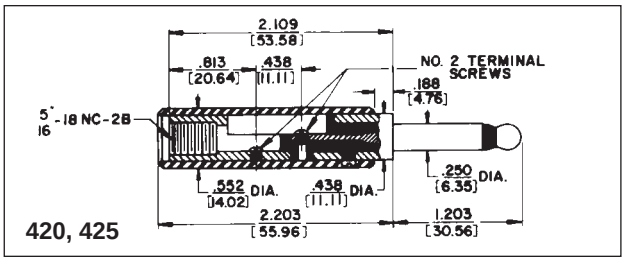


420, 425

## 3-CONDUCTOR

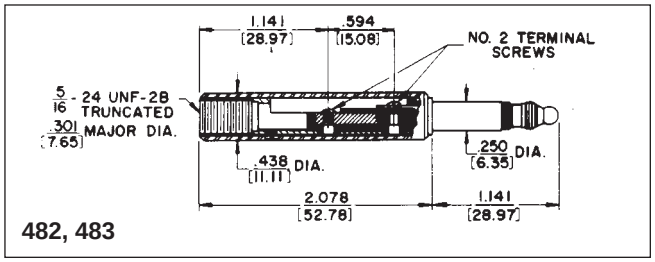


482, 483

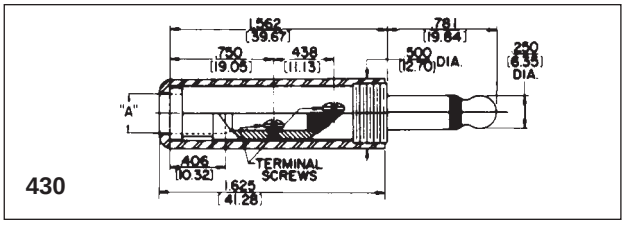


430

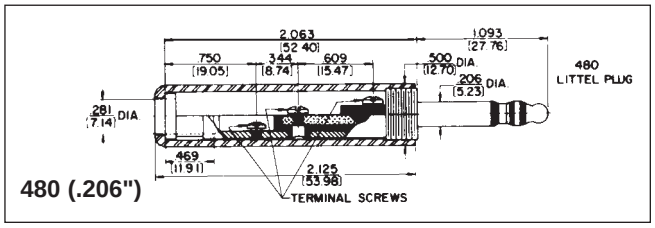


480 (.206")

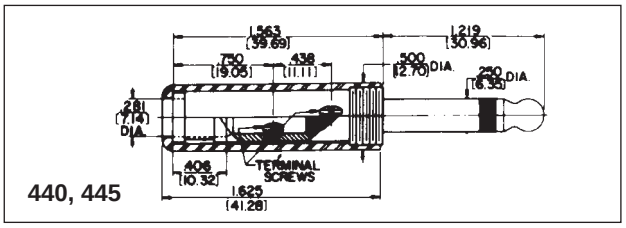


440, 445

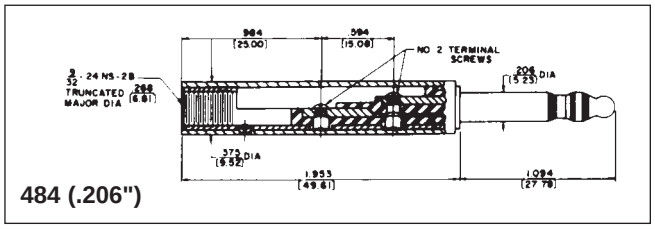


484 (.206")

## FEATURES

Designed for high quality communication equipment to meet military requirements, This series features one-piece tip rod and one-piece sleeve and plug body, assembled together into a mode as inserts, providing a finished plug with complete continuity of thermoplastic insulation between top rod and plug sleeve. Internal (invisible externally) interlock mechanically engages the metal and plastic components providing a realistic lock to prevent parts shifting. Design and material in accordance with MIL-P-642(A), MIL part number molded or stamped on handle, manufacturer's trademark (as required by MIL specification) appears on plug body.

## SPECIFICATIONS

**Tip Rod, Body and Screws:** Copper alloy, natural finish.

**Terminals:** Tinned copper alloy.

**Insulation:** Thermoplastic, per MIL-P-22985, Type II, Class 1.

**Handles:** Thermoplastic, Type 6, per MIL-M-20693, Type II. Shielded; machined from copper alloy, nickel-plated.

## STRAIN RELIEF CLAMP

For MIL-type Littel-Plug phone plugs. **P2380** conforms to Specification SC-A-7674-F - supplied with Plug Numbers 430, 440, 445 and 470. **P2381** meets Specification MS-35762 - supplied with Plug Number 480 and Extension-Jax® phone jack, Number 820.

DIMENSIONS ARE FOR REFERENCE ONLY Inch (mm)



® Registered trademark of Switchcraft, Inc.
Note: Contact your Switchcraft Representative for price and delivery

* Please visit the product pages on our website for the most up-to-date product information

# LITTEL PLUG® PHONE PLUGS

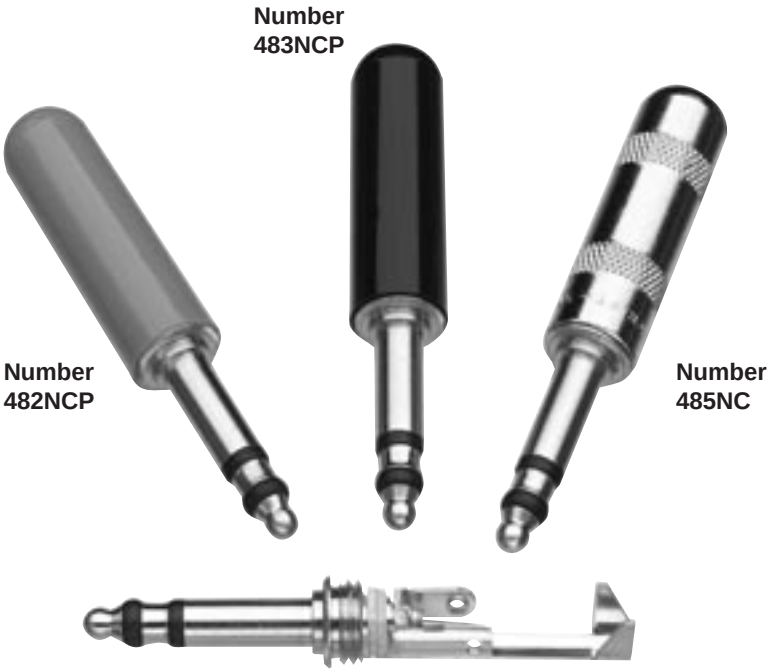


## FEATURES AND BENEFITS

- 3 conductor plug
- Designed for high quality communication equipment
- One-piece tip rod ensures electrical continuity
- Brass plug finger versions meet MIL specifications
- 'N' and 'NC' suffix versions have nickel-plated plug fingers, excellent for audio applications
- 'NC" suffix option has rugged, heavy duty cable clamp, solder terminals for easier solderability and assembly. Metal shielded handle
- 'NCP" - plastic handle

## SPECIFICATIONS

**Plug Finger:** Brass, natural finish or nickel-plated
**Terminals:** Brass, electro-tinned
**Insulation:** Ethyl cellulose, per MIL-P-22835, Type II, Class 1, or acetal resin
**Handles:** Plastic-nylon molding plastic, Type 6, per MIL-M-20693, Type II. Shielded metal handle with red, black or nickel finish

## ORDERING INFORMATION

1. Order by part number.
2. Contact Switchcraft for more information.
3. Mating jacks available.

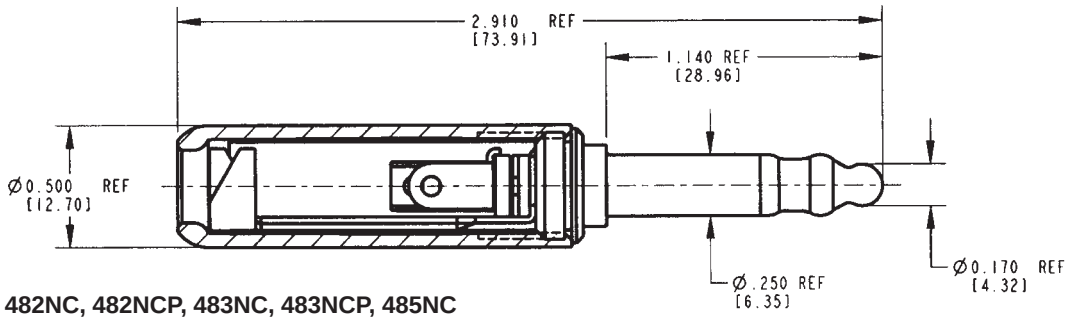


**PART NO. 482NC, 482NCP, 483NC, 483NCP, 485NC**

DIMENSIONS ARE FOR REFERENCE ONLY Inch (mm)

* Please visit the product pages on our website for the most up-to-date product information

# LITTEL PLUG® PHONE PLUGS

| Part Number | Conductors | Terminals | Handle | MIL Part Number | Notes |
|---|---|---|---|---|---|
| **482N** | 3 | Screw | Red | None | Plastic handle, nickel plated plug finger |
| **482NC** | 3 | Cable Clamp | Shielded | None | Red metal handle, nickel plated plug finger |
| **482NCP** | 3 | Cable Clamp | Red | None | Plastic handle,nickel plated plug finger |
| **483N** | 3 | Screw | Black | None | Plastic handle, nickel plated plug finger |
| **483NC** | 3 | Cable Clamp | Shielded | None | Black metal handle,nickel plate plug finger |
| **483NCP** | 3 | Cable Clamp | Black | None | Black plastic handle, nickel plated plug finger |
| **485NC** | 3 | Cable Clamp | Shielded | None | Nickel plated handle,nickel plated plug finger |

## 480 SERIES PART NUMBERING CHART

| Part number | 206" dia. finger | 1/4" dia. finger | Brass finger | Nickel finger | Handle Material | Red handle | Black handle | Nickel handle | Standard cable clamp | Large cable clamp |
|---|---|---|---|---|---|---|---|---|---|---|
| **480** | • | | • | | Plastic | | • | | • | |
| **482** | | • | • | | Plastic | • | | | • | |
| **482N** | | • | | • | Plastic | • | | | • | |
| **482NC** | | • | | • | Metal | • | | | | • |
| **482NCP** | | • | | • | Plastic | • | | | | • |
| **483** | | • | • | | Plastic | | • | | • | |
| **483N** | | • | | • | Plastic | | • | | • | |
| **483NC** | | • | | • | Metal | | • | | | • |
| **483NCP** | | • | | • | Plastic | | • | | | • |
| **484** | • | | • | | Plastic | • | | | • | |
| **485NC** | | • | | • | Metal | | | • | | • |

DIMENSIONS ARE FOR REFERENCE ONLY Inch (mm)



® Registered trademark of Switchcraft, Inc.
Note: Contact your Switchcraft Representative for price and delivery

* Please visit the product pages on our website for the most up-to-date product information

# MIL-TYPE 1/4" TWIN PHONE PLUGS ®

**Number 411**

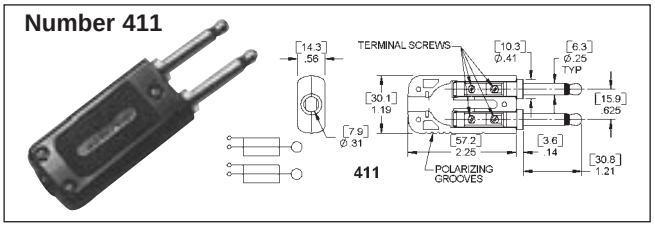


**Number 414**

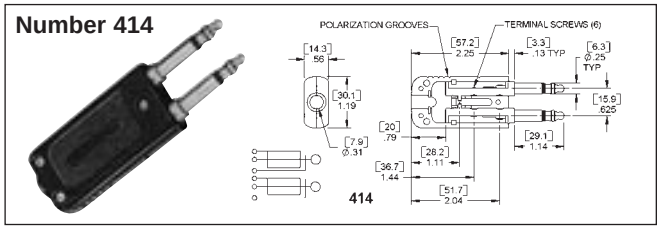


**Number 412**

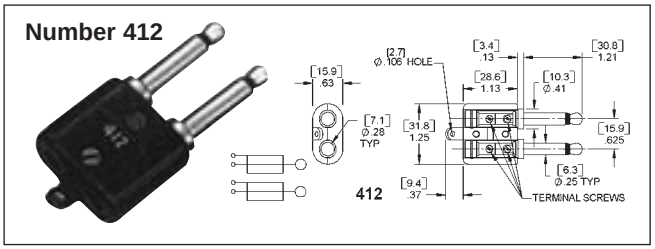


**Number 415**

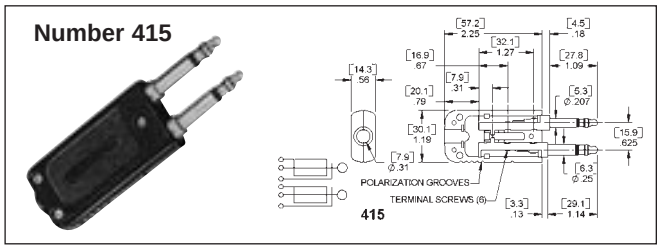


## FEATURES

Design and material strictly in accordance with Specification MIL-P-642(A), MIL part number molded or stamped on handle, manufacturer's trademark (as required in MIL Specification) appears on plug body. Ideal for use in broadcast and recording studios, military, industrial and telephone switchboard applications, instrumentation and telemetry.

Individual plugs, featuring one-piece tip rod and one-piece sleeve and plug body, with complete continuity of thermoplastic insulation between plug elements, are placed into handles to provide a double Twin-Plug® plug (two electrically-independent 2-conductor plugs spaced .625" center-to-center, with self-alignment feature). 411, 414 and 415 Twin-Plug plugs have provision for use of Cord Clamp **Number S2674**. 412 Twin-Plug has external Cord Anchor.

6-conductor Twin-Plug, 414 and 415, provide two electrically-independent 3-conductor plug fingers spaced on .625" centers. Fingers are insulated from each other and each provides tip, ring and sleeve connections. Black plastic handle is notched to indicate polarity. Accepts standard 6-conductor cables. Handle has provision for use of Cord Clamp, **S2674**.

Fingers of 414 are .25" diameter and mate with Switchcraft type MT389 Twin-Jax®, MT333B, MT336 MT-Jax®, and other jacks having .25" inside diameter sleeves and mounted on .625" centers. 415 has a .25" diameter finger and a .206" diameter finger to provide automatic polarization. Fingers mate with Switchcraft MT332B and MT342B MT-Jax, respectively.

## STRAIN RELIEF CLAMP

Natural brass. For use only with 411, 414, 415 Twin-Plug, **S2674**.

## SPECIFICATIONS

**Tip, Rod, Ring Sleeve, Body, Screws:** Copper alloy, natural finish. Number 412 Handle Screws - iridescent iridite overplating.

**Terminals:** Tinned copper alloy. (Latest MIL Specifications no longer specify terminals; terminal furnished is the type referenced as TM-89).

**Insulation:** Thermoplastic; per MIL-P-22985, Type II, Class 1.

**Handle:** Thermoplastic on 411, 412, 414 and 415, per MIL-P-22985, Type II, Class 4. Molded black thermoset plastic per MIL-M-14F.

| Part No. | Conductors | Terminals | "Typical Mating Jack1" | Mil No. | Notes |
|---|---|---|---|---|---|
| 411 | 2 | Screw | MT388 | M642/9-1 | Provision for internal cord clamp (not included) |
| 412 | 2 | Screw | MT388 | --- | MILPJ289. Similar to WECo289B |
| 414 | 3 | Screw | MT389 | --- | 6-circuit plug, 2 electrically-independent 3 conductor fingers, .25" fingers. Provision for internal cord clamp (not included) Similar to WECo 338A. 425A-3 |
| 415 | 3 | Screw | MT332B &1, MT342B | --- | 6-circuit plug, 2 electrically-independent 3 conductor fingers, one .25" finger, one .206" finger. Provision for internal cord clamp (not included) |

1. Switchcraft Part Numbers. See Jacks Section for other mating jacks.

DIMENSIONS ARE FOR REFERENCE ONLY Inch (mm)

* Please visit the product pages on our website for the most up-to-date product information

## MIL-TYPE 1/4" EXTENSION JACKS ®

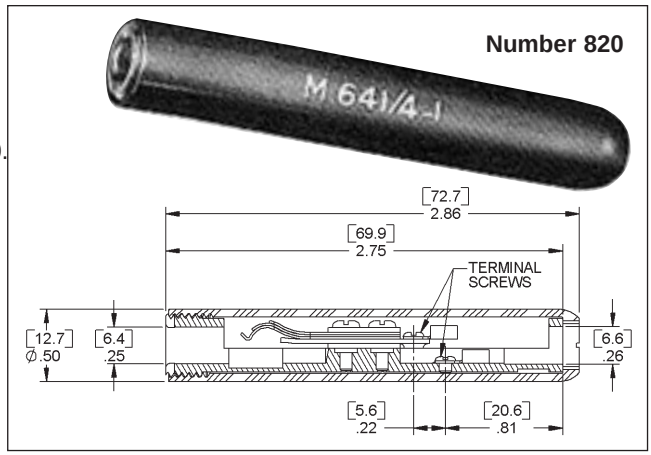


### FEATURES

Cable jack meets requirements of Specification MIL-J-641(A), Type Number JJ-026. Mates only with MIL-type plugs PJ-054 and PJ-540. Switchcraft 430.

### SPECIFICATIONS

**Body and Terminal Screws:** Copper alloy, natural finish.
**Springs:** Punched from special copper alloy.
**Stack Insulation:** Rigid plastic spacers Rigid plastic tubing.
**Handle:** Same as plug handle above.
**Stack Screws:** Stainless steel.

| Part Number | Conductors | Terminals | Typical Mating Plug[1] | Handle | Handle Part Number | MIL Part Number |
|---|---|---|---|---|---|---|
| **820** | 2 | Screw[2, 3] | 430 | Black | M1015 | M641/4-1 |

1. Switchcraft Part Number See Jacks Section for mating jacks. 2. Switchcraft replacement screw. **P1070**, Terminal **P1069** (2 each required)
3. See previous page for strain relief clamp.

## TELEPHONE PATCH ADAPTERS ®

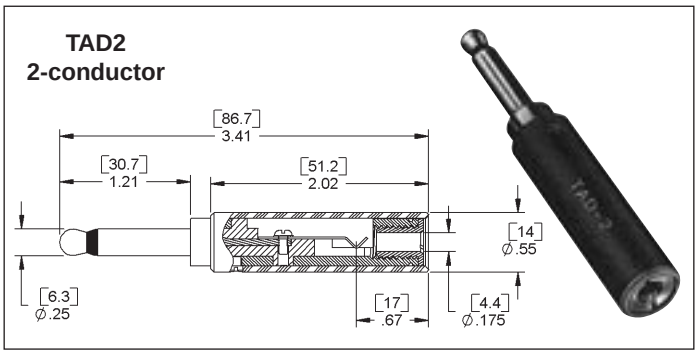


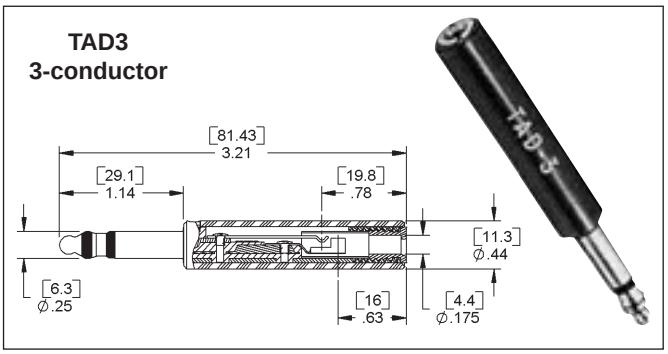


### FEATURES

Compact patch adapters convert standard full-size phone jacks to standard miniature phone jack connections with maximum convenience and reliability at a minimum cost. Eliminates cross-patching problems and need for combination patch cords with standard phone plug on one end and a miniature phone plug on the other. Adapters are 100% compatible with Switchcraft® telephone type and military phone jacks and miniaturized tini-telephone patching system components, as well as equivalent industry standard phone plugs.

**TAD2 –** 2-conductor adapter. Plug finger meets specifications for MIL plug PJ-047 (MIL-P-642). Fits Switchcraft T-Jax®, M-Jax®, MIL-approved MT-Jax®, and other industry-standard phone jacks with .250" inside diameter sleeves. The .552" diameter handle accommodates jacks on .625" centers. For quick identification, TAD-2 is stamped on the blue handle - will not wear off with constant use. Miniature 2-conductor jack built into plug body, accepts miniature phone plugs with .173" diameter fingers, such as Switchcraft tini-telephone® plugs, Series TT200 and TT250, and other standard miniature telephone plugs. TAD3 is a 3-conductor version of TAD2. Finger configuration meets requirements of PJ-051 (MIL-P-642). Finger incorporates dead ring to minimize plug and jack wear. Blue handle has diameter of .444".

### SPECIFICATIONS

**Tip Rod, Ring, Sleeve Body and Screws:** Copper alloy, natural finish.
**Insulation:** Injection-molded plastic.
**Jack Springs:** Formed copper alloy.
Screw, Spring Retaining:
**TAD2 -** #2-64, steel. Part Number **P1616** (one required).
**TAD3 -** #2-64, brass. Part Number **P1070** (two required).
**Ring Insulations (TAD3 only):** Kraft paper sleeve.
**Handle:** Molded blue thermoplastic with die-stamped identification legend. TAD2 Handle, (Part Number **M1487**), and Retaining Screw, (Part Number **T1677**), one required. TAD3 Handle, (Part Number **M1488**), and Retaining Screw, (Part Number **T1990**), one required.

DIMENSIONS ARE FOR REFERENCE ONLY Inch (mm)


® Registered trademark of Switchcraft, Inc.
Note: Contact your Switchcraft Representative for price and delivery

* Please visit the product pages on our website for the most up-to-date product information

# MINIATURE TELEPHONE PLUGS

TT251 and TT252

TT253 and TT254

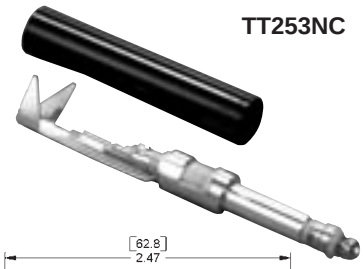

TT253NC

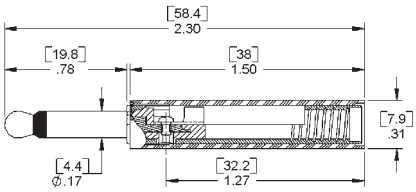


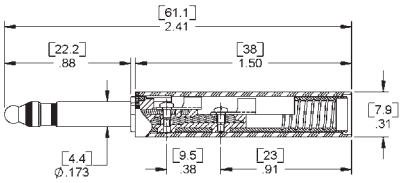


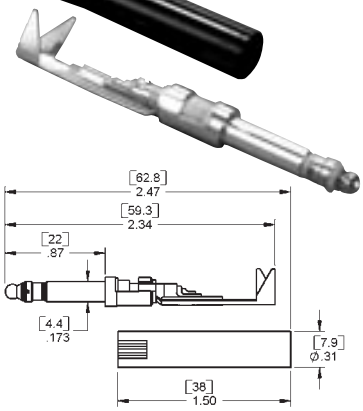


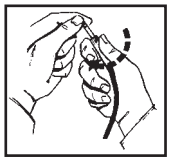

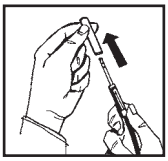

Removing handle from plug body can be easily accomplished by lightly squeezing the knurled area of the handle and twisting 30° counter-clockwise.

## .173" MINIATURE PHONE PLUGS FEATURES

2- and 3-conductor miniature non-shorting telephone plugs designed for use with TT-Jax®, Unijax®, and other phone jacks with a .176" inside diameter bushing. Approximately 1/2 the size of standard phone plugs, yet retains the uniformity, dependability and quality of MIL-type phone plugs.

TT-Plug® Miniature Telephone Plugs are the first to offer 2- and 3-conductors in an attachable type with twist handles for quick assembly. Series TT250 phone plug is available with red or black handles. Other color handles available on special order. Also available with nickel-plated plug fingers. (Add “N” to part number: 253N, 254N).

The TT253NC and TT254NC offer the same nickel-plated plug fingers as the ‘N’ versions, but also includes cable clamps and solder terminals for easy assembly.

Plugs feature a one-piece tip rod, ring and a one-piece sleeve with integral plug body, assembled together into a mold as inserts. Providing complete continuity of thermoplastic insulation between tip rod, ring and sleeve. Internal interlock of all parts prevents shifting and shorting under extreme rugged usage.

Internal 12-24 threads in end of plug body are intended for threading over outer jacket of a patch cord to provide a superior cable anchor.

Patch cords such as Switchcraft Series TT700 (or other .216" diameter cable) are easily attached to Series TT250 by screw terminals.

## FEATURES AND BENEFITS

- Designed for pro audio applications
- 3 Conductor
- .173" (4.40mm) plug finger diameter
- One-piece tip rod ensures high reliability
- Complete continuity of thermoplastic insulation between conductors
- Internal keying of all parts preventing shifting and shorting
- Solder terminals for easier termination and assembly
- Large cable clamp for shield termination and strain relief
- Black or red handles

## SPECIFICATIONS

**Tip Rod, Ring, Sleeve and Body:** Copper alloy, natural finish.

**Terminals and Terminal Screws:** Copper alloy, natural finish.

**Insulation:** Thermoplastic. **Handle:** Molded plastic

| Part Number | Conductors | Terminals | Handle Color | Handle Part Number | Description |
|---|---|---|---|---|---|
| **TT251** | 2 | Screw | Black | T2302 | |
| **TT252** | 2 | Screw | Red | T2315 | |
| **TT253** | 3 | Screw | Black | T2307 | Mil-type M642/13-1 |
| **TT253N** | 3 | Screw | Black | T2324 | Nickel-plated plug |
| **TT253NC** | 3 | Solder | Black | T2324 | Nickel-plated plug, tinned solder terminals |
| **TT254** | 3 | Screw | Red | T2301 | Mil-type M642/13-2 |
| **TT254N** | 3 | Screw | Red | T2325 | Nickel-plated plug |
| **TT254NC** | 3 | Solder | Red | T2325 | Nickel-plated plug, tinned solder terminals |
| **2P2003** | 3 | Screw | None | None | |

DIMENSIONS ARE FOR REFERENCE ONLY Inch (mm)

* Please visit the product pages on our website for the most up-to-date product information

# .173" MINIATURE TELEPHONE PLUGS BANTAM TYPE

## FEATURES

Miniature telephone twin plugs with two 2-conductor or two 3-conductor fingers, designed to mate with TT Twin-Jax®, TT-Jax®, and other phone jacks with a .176" inside diameter bushing and compatible tip and ring springs. Approximately 1/2 the size of standard phone plugs; yet retains uniformity, dependability of high-quality phone plugs. The phone plugs are exceptionally light, small and rugged. Plug fingers can easily be removed and replaced.

- Minimum Space: Plugs fit .313" centers, horizontally or vertically.
- Self-Aligning: Plug fingers compensate for minor variations in jack spacing.
- Polarizing: Handle notches identify location of each finger.
- Tip Monitoring: Handle ports permit probe insertion to monitor tip circuits.
- Terminating and Looping Plugs: OEMs can fabricate cross-wired plugs, i.e., tip-to-sleeve, tip-to-ring, etc., according to individual requirements. OEMs can also wire-in resistors, RCL networks, etc. for standard and special terminating applications. Switchcraft will build looping and terminating TT-Twin Plugs on special order, where quantities warrant.
- Sleeve Plugs: For looping, terminating and single cable applications, sleeve plugs seal off unused handle open-ing(s). Sleeve plugs also make a bridged (common) sleeve connection by holding braided shield in place in second plug.On special order, TT-Twin Plugs can be supplied with one 2-conductor finger and one 3-conductor finger.
- Ease of Assembly/Disassembly: Refer to illustration below for assembly/disassembly procedure; no handle retaining screws required. Tip and ring terminations are screw-type screws supplied).

## SPECIFICATIONS

**Tip Rod, Ring, Sleeve and Body:** Copper alloy, natural finish.
**Terminals and Terminal Screws:** Copper alloy, natural finish.
**Insulation:** Thermoplastic.
**Handle, Sleeve Plugs:** Molded plastic.

1. **DISASSEMBLY:** Place plug on edge as shown. Push down and back on metal lip on finger (inside notch) with small screwdriver and slip plug finger out of handle. Turn plug over and repeat for other finger.
2. **CABLE INSTALLATION:** Fold braided shield on cable back over insulation. Insert leads through rear of plug finger, and screw finger (clockwise) onto cable with twisting motion until lead terminations lineup with threaded tip and/or ring openings. Fasten terminals on both fingers with screws provided.
3. To bridge sleeves (common connection), place free end of braided shield in remaining finger sleeve opening. Press sleeve plug firmly in place.

**TT261:** Two electrically-independent 2-conductor fingers in a black handle. Can be used with single or dual cables for independent tip circuits with common sleeve or separate sleeve circuits.

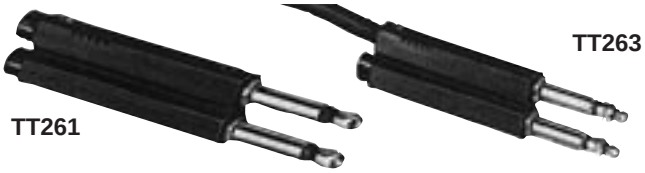


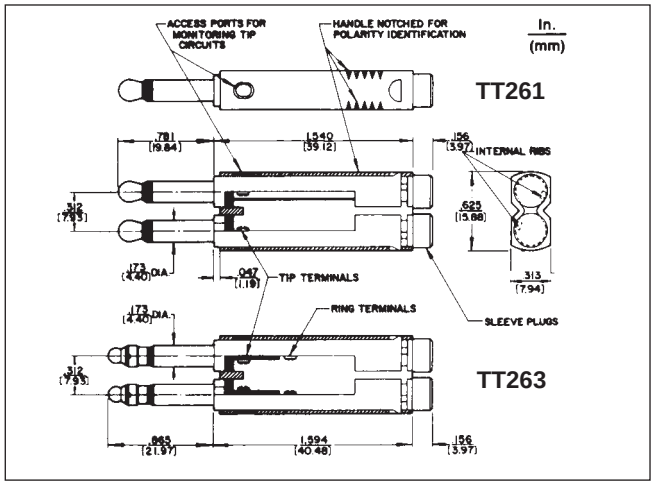


**TT263:** 6-circuit plug consists of two electrically-independent 3-conductor fingers with black handle. Can use single or dual cables for two electrically-independent 3-conductor fingers or common tip, ring and/or sleeve circuits.

| Part Number[1] | Cond. | Terminals | Typical Mating Jack[2] | Handle | Handle Part Number | MIL Type Number |
|---|---|---|---|---|---|---|
| **TT261** | 2 | Screw[3] | TT31 | Black | T2300-2 | – |
| **TT263** | 3 | | TT32B | Black | T2316 | M642/13-3 |

1. TT-Twin Plug plugs can be supplied with one, 2-conductor plug finger and one, 3-conductor plug finger in the same handle (on special order).
2. Switchcraft Part Numbers. See additional mating jacks in this section.
3. Switchcraft Replacement screw **P2240**, Terminal **P2642**. 2 each required with 2-conductor twin plugs; 4 each required with 3-conductor twin plugs.
4. Replacement Hole Plug Switchcraft **T2318** (Black) **T2319** (Red).

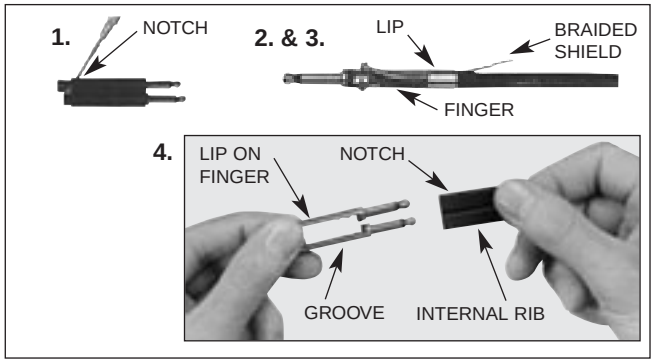


4. **ASSEMBLY:** Align grooves in fingers with internal handle ribs and insert fingers into rear of handle. Push fingers in until lips or rear of fingers snap into notches on handle.

DIMENSIONS ARE FOR REFERENCE ONLY Inch (mm)


® Registered trademark of Switchcraft, Inc.
Note: Contact your Switchcraft Representative for price and delivery

* Please visit the product pages on our website for the most up-to-date product information

# 1/4" COMMERCIAL PHONE PLUGS

## 2-CONDUCTOR LITTEL-PLUG® PLUGS

Numbers 240, 245, 250, 255 (typical)

Numbers 280, 281, 285, 285L, 288 (typical)

## 3-CONDUCTOR LITTEL-PLUG® PLUGS

Number 260 (typical)

Number 290 (typical)

### FEATURES

- Heavy duty machined copper alloy handle (shielded versions), tip and body for unsurpassed ruggedness.
- Bright nickel plating on exterior surfaces will not chip or corrode.
- Solder terminals are tin electroplated for ease of soldering.
- One-piece tip rod staked into tip terminal ensures electrical continuity
- Heavy duty cable clamp provides secure strain relief.
- The proven industry standard phone plug for audio applications. Beware of imitations!
- Shielded handle versions recommended for applications where electromagnetic interference and physical abuse may occur.

### SPECIFICATIONS

**Sleeve, Tip and Body:** Nickel-plated copper alloy.
**Terminals:** Solder lug - Tinned copper alloy.
**Screw:** Tin-plated (screws size 3-48).
**Handles:** Molded - black or red plastic. Shielded - machined Nickel-plated copper alloy. Tubular insulator inside handle.

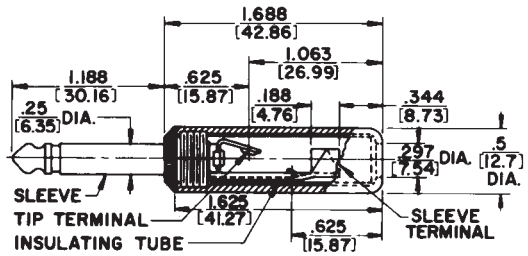


**No. 280 typical – shown with solder lug terminals, cord clamp and shielded handle.**

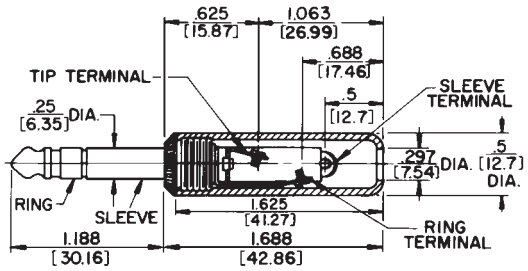


**No. 280 typical – shown with screw-type terminals, plastic handle.**

### 2-CONDUCTOR PLUGS PART NUMBERS

| Part Number | Terminals | Typical Mating Jack[2] | Handle* | Handle Part Number |
|---|---|---|---|---|
| 240 | Screw[3] | 11 | Black | M1002 |
| ◊C240 | Screw[3] with Cable Clamp | | Black | |
| 245 | Screw[3] | | Red | M1003 |
| ◊C245 | Screw[3] with Cable Clamp | | Red | |
| 250 | Solder Lug & Cable Clamp | | Black | M1002 |
| 255 | | | Red | ◊M1003 |
| 270 | Screw[3] | | Shielded | Handle: T10581 Insulator: A10071 |
| ◊C270 | Screw[3] with Cable Clamp | | Shielded | |
| 280 | Solder Lug & Cable Clamp | | Shielded[1] | |
| 281 | | | Shielded[4] | |
| 285 | | | Shielded[4, 5] | |
| 288 | | | Shielded[1] | |
| 285L | | | Shielded[4, 5, 6] | T2323 |
| 2P1298 | Solder Lug & Cable Clamp | | Without Handle | |
| ◊2P1495 | Screw[3] | | | |

### 3-CONDUCTOR PLUGS PART NUMBERS

| | | | | |
|---|---|---|---|---|
| 260 | Screw | 12B | Black | M1002 |
| 267 | Solder Lug & Cable Clamp | | Black | M1002 |
| 269 | | | Red | ◊M1003 |
| 290 | Screw[3] | | Shielded | Handle: T10581 Insulator: A10071 |
| 297 | Solder Lug & Cable Clamp | | Shielded | |
| ◊2P1248 | Solder Lug & Cable Clamp | | Without Handle | |

* Additional plug handle colors available (**P2714**) green, (**M1111**) blue, (**M1235**) gray. Fits any plug on which Numbers M1002, M1003 are standard.
1. Wide insulator between tip and sleeve allows use of 2-conductor plug in 3-conductor jack without shorting.
2. Switchcraft Part Numbers. See Mating Jacks Section.
3. Replacement Screw Part Number **P10292** (2-conductor plugs require 2 screws; 3-conductor plugs require 3 screws).
4. Unassembled.
5. Larger cable clamp to accommodate larger diameter cables.
6. Handle has .375" (9.53mm) diameter hole to accommodate larger diameter cables.

◊ Special order only. Contact Switchcraft.

DIMENSIONS ARE FOR REFERENCE ONLY Inch (mm)

* Please visit the product pages on our website for the most up-to-date product information

# 1/4" COMMERCIAL PHONE PLUGS (continued)

Switchcraft® commercial 2- and 3-conductor phone plugs are available with a logo handle in addition to the plain handle. The Switchcraft® name appears prominently on the shielded handle so the plugs can no longer be easily confused with "copycat" plugs found on the market today. Knurling on handles provides a convenient, positive fingertip grip for connect and disconnect. Plugs are available in the following popular variations:

1. 1/4" diameter finger, 2-conductors.
2. 1/4" diameter finger, 3-conductors.
3. .206" diameter finger, 2-conductors.

Plug handles accept cable up to .290" diameter.

## SPECIFICATIONS

**Sleeve:** Tip and Body: Plated copper alloy.
**Terminals:** Solder lug: Copper alloy, electro-tinned; Screw: Tin-plated (screw size #3-48).
**Handles:** Nickel-plated zinc (tubular insulator inside handle).

## PART NUMBERS

**NOTE:** Plugs have 1/4" finger diameter unless otherwise specified.

| Logo Handle | Plain Handle | Description | Typical Mating Jack |
|---|---|---|---|
| **2-CONDUCTORS** | | | |
| **570** | **270** | Screw terminals. Shielded handle. | 11 |
| **580** | **280** | Solder lug & cable clamp. Shielded handle. | |
| **581** | **281** | Solder lug & cable clamp. Shielded handle. Unassembled. | |
| **585** | **285** | Solder lug & cable clamp. Shielded handle. Unassembled. Larger cable clamp accommodates larger cables. | |
| **588** | **288** | Solder lug & cable clamp. Shielded handle. Wide insulator between tip and sleeve makes possible use as a 2-conductor plug in 3-conductor jack without shorting. | |
| **S580** | **S280** | Solder lug & cable clamp. Shielded handle. Plug finger has .206" diameter. | S11 |
| **3-CONDUCTORS** | | | |
| **590** | **290** | Screw terminals. Shielded handle. | 12B |
| **597** | **297** | Solder lug & cable clamp. Shielded handle. | |
| **598** | **298** | Solder lug & cable clamp. Shielded handle. Locking feature. | 12B, 133 |

1. Other mating plugs are available.
2. Replacement screw, Part Number **P10292** (2-conductor requires 2 screws; 3-conductor requires 3 screws).

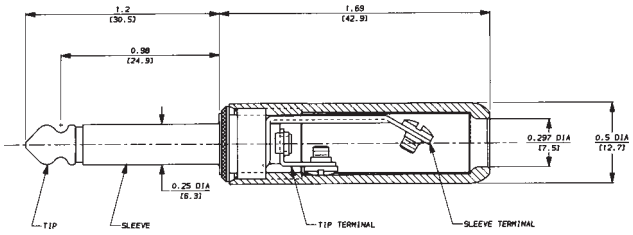


**No. 570 (Typical)**

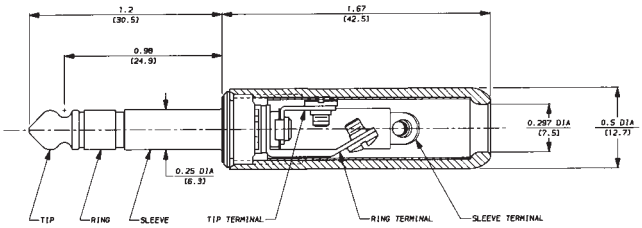


**No. 590 (Typical)**

DIMENSIONS ARE FOR REFERENCE ONLY Inch (mm)


® Registered trademark of Switchcraft, Inc.
Note: Contact your Switchcraft Representative for price and delivery

* Please visit the product pages on our website for the most up-to-date product information

# 1/4" COMMERCIAL PHONE PLUGS (continued)

Numbers 70, 184

Number 170, 181

Number 40

Number 160

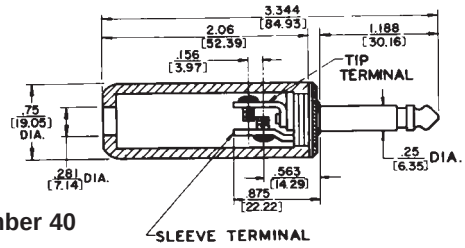


Number 40

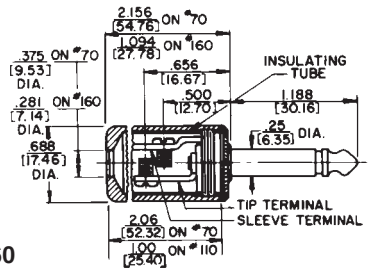


Number 160

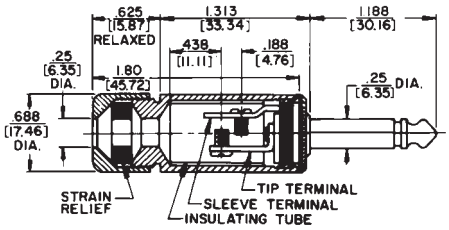


Number 170

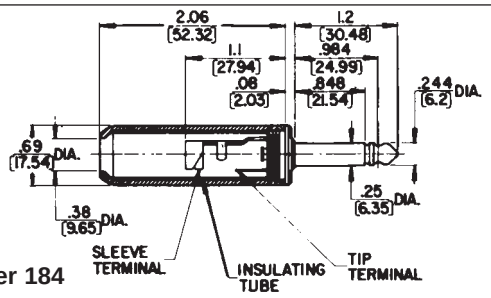


Number 184

## 2-CONDUCTOR/PLASTIC OR SHIELDED HANDLES

Popular general purpose plug fits all standard jacks. Available in both 2- and 3-conductor types. Two-conductor plugs available with black or red molded plastic, or 3 different lengths of brass nickel-plated (shielded) handles. 2-Conductor Special Military Plugs are also available.

## FEATURES

- 1-piece tip rod staked into tip terminal insures tightness of plug.
- All essential conducting members are brass with external parts nickel-plated.
- Terminal screws: broad-headed. In production quantities, screws may be eliminated and terminals hot-tinned for easier soldering of wire leads to terminals (special order).
- Screw terminals have grooves which accommodate 1 or 2 cord tips.
- Thermoplastic handle insert for greater insulation.
- Plugs accept up to .25" maximum diameter cable (parallel or shielded cable).

## SPECIFICATIONS

**Sleeve, Tip and Body:** Nickel-plated copper alloy.
**Terminals:** Solder lug: copper alloy, electro-tinned.
**Screw:** steel, tin-plated.
**Handles:** Shielded: Nickel-plated copper alloy.
**Molded:** black or red plastic.

| Part Number | Terminals | Typical Mating Jack[2] | Handle | Handle Part Number |
|---|---|---|---|---|
| 40 | Screw (Replacement Screw Part No. P10013) 2 required | 11 or Z15J | Black | M1001 |
| 70[3] | | | Shielded | Handle: T10141 Insulator: A10063 |
| 160 | | | Shielded | Handle: T10451 Insulator: A10061 |
| ◊2P1251 | | | Without Handle | – |
| 170[1] 182QB 182QBD | | | Shielded | Handle: T11231[1] Insulator: A10064 |
| 184[3] | Solder Lug & Cable Clamp | | Shielded | Handle: T10141 Insulator: A11372 |
| 184L[4] | | | Shielded | T2322 |

1. 2-piece shielded handle with built-in cable clamp for .25" diameter cable. Handles: Number T11231, handle; Number T11241, cap; see above for insulating tube; Number T1125, rubber washer.
2. Other mating plugs are available.
3. Handle has .380" (9.65mm) diameter hole to accommodate .375" diameter cable.
4. Handle has .451" (11.51mm) diameter hole to accommodate larger diameter cables.

DIMENSIONS ARE FOR REFERENCE ONLY Inch (mm)

* Please visit the product pages on our website for the most up-to-date product information

## SILENT-PLUG PHONE PLUGS

No. 172

Silent-Plug plugs have unique circuit-closing device—stops hums, squeals and pops when plug is removed from jack. One-piece tip rod assembly insures plug quality. Utilizes cables up to .25" diameter (parallel or shielded cable). U.S. Patent No. 2,664,475.

### SPECIFICATIONS

**Sleeve, Tip and Body:** Nickel-plated copper alloy.
**Terminals:** Copper alloy, tin-plated.
**Screw:** Cadmium plated (screws size 3-48).
**Handles:** Shielded machined copper alloy nickel-plated. Tubular insulator inside handle.

### 2-CONDUCTOR PLUGS

| Part Number | Terminals | Typical Mating Jack | Handle | Handle Part Number |
|---|---|---|---|---|
| 172 | Screw (Replacement Screw Part No. P-1011-3) 2 required | 11 | Shielded | Two-Piece[1] Ins. Tube A-1006-3 |
| 181 182 | Solder Lug and Cable Clamp | | Shielded[2] | Two-piece[1] Ins. Tube A-1137-1 |
| | | | | T-1014-1 Handle, A-1137-2 Ins. Tube |

1. 2-piece shielded handle with built-in cable clamp for .25" diameter cable. Handles: Number **T1123-1**, handle; Number **T1124-1**, cap; Number **T-1125**, rubber washer. 2. Mylar tube insulation for greater protection.

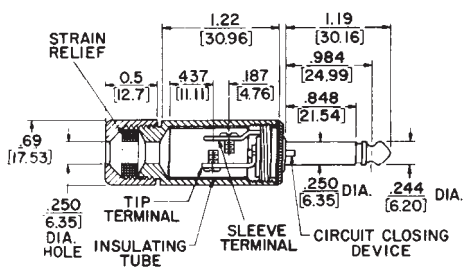


2-Conductor "Silent Plug", No. 172

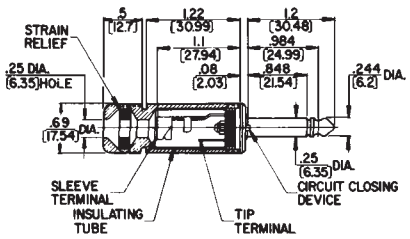


No. 181

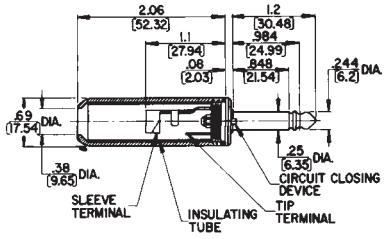


No. 182

## LUG®-PLUG PHONE PLUGS

Nos. 350, 351, 355 No. 380

Similar to Littel-Plug phone plug. Same molded handles as used on Littel-Plug; metal handle, bright nickel-plated, only 1" long. Fits all standard jacks. See drawing for details.

### SPECIFICATIONS

**Sleeve, Tip and Body:** Nickel-plated copper alloy.
**Terminals:** Solder lug: copper alloy, tin-plated.
Screw: plated steel.
**Handles:** Shielded: Nickel-plated copper alloy.
Molded: black or red plastic.

### 2-CONDUCTOR PLUGS

| Part Number | Terminals | Typical Mating Jack[1] | Handle | Handle Part Number |
|---|---|---|---|---|
| 350 | Solder Lug | 11 | Black | M-1002 |
| 2P-1216 | | | | |
| 380 | | | Shielded | Handle: T-1060-1 Insulator: A-1007-2 |

1 Switchcraft part numbers. See Jacks Section for additional mating jacks.

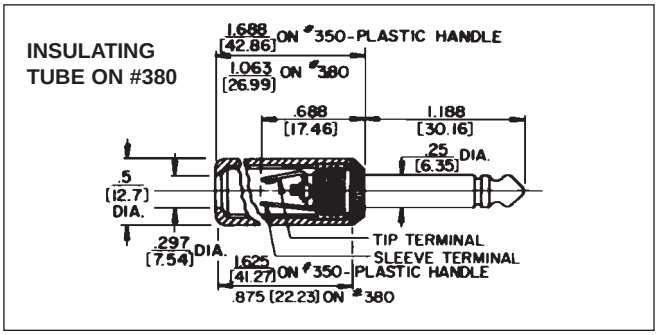


DIMENSIONS ARE FOR REFERENCE ONLY Inch (mm)


® Registered trademark of Switchcraft, Inc.
Note: Contact your Switchcraft Representative for price and delivery

* Please visit the product pages on our website for the most up-to-date product information

## AUDIO LOUDSPEAKER PLUGS

SERIES 187

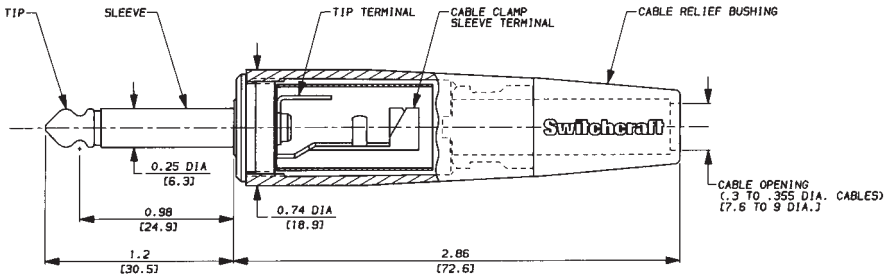


Number 187BL (Typical)

The 187 series 1/4" phone plugs are similar to the Switchcraft® 184 plugs, except that they offer an attractive tapered handle with a snap-in flex relief. Other features include:

- Larger tip terminal to accommodate wire sizes up to 14 AWG.
- Choice of Satin nickel or black finish.
- Black flex relief bushing can be specified in three different cable diameter openings for maximum reliability of cable.
- Plug is rated at 15A rms (maximum) for use with audio loudspeaker applications.

| Part Number | | Cable Relief Bushing diameter (inch) | Typical Mating Jack[1] |
|---|---|---|---|
| Nickel Finish | Black Finish | | |
| 187 | 187B | .3 to .33 (regular) | 11 or Z15J |
| 187L | 187BL | .3 to .355 (large) | |
| 187D | 187BD | .2 to .30 (small) | |

1. Other mating plugs are available. See Jacks Section.

### SPECIFICATIONS

**Sleeve, Tip and Body:** Nickel-plated copper alloy.
**Terminals: Solder lugs:** tinned copper alloy;
Screw: tin-plated.
**Handles:** Die-cast zinc. Satin nickel or black finish.
**Cable Relief Bushing:** Black (thermoplastic elastomer).

## HEAVY DUTY 1/4" COMMERCIAL PHONE PLUGS

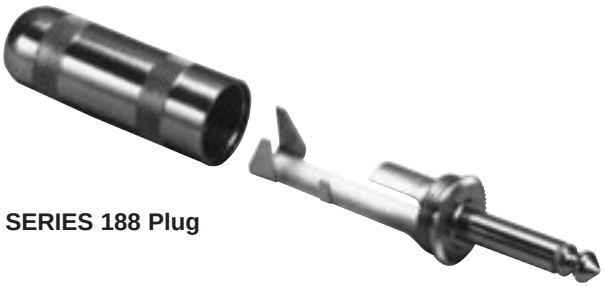

SERIES 188 Plug

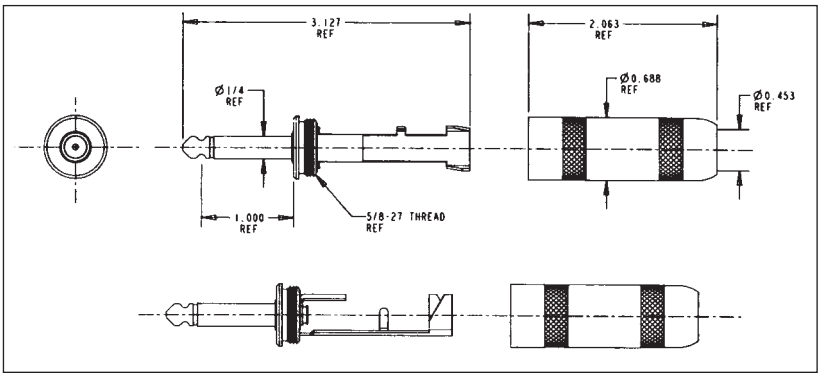


- Switchcraft's 188 is more heavy-duty than our competitor's biggest 1/4" commercial phone plugs.
- Large curved tip solder terminal makes it easier to solder to heavy gauge wires.
- Longer sleeve terminal allows more room to make sleeve solder connections.
- Extra-large cable clamp securely grips cable of up to .450" in diameter.
- Will easily accommodate some varieties of four conductor 14 gauge wire and parallel two conductor 12 gauge wire.
- Bendable tab on sleeve terminal makes termination easier by holding down cable while soldering. In addition, such mechanical retention makes for a superior solder connection.
- Will handle up to 15 A. rms (maximum).

(continued on next page)

DIMENSIONS ARE FOR REFERENCE ONLY Inch (mm)

* Please visit the product pages on our website for the most up-to-date product information

# HEAVY DUTY 1/4" COMMERCIAL PHONE PLUGS (continued)

## SPECIFICATIONS

**Contact Resistance (typical *D.O.M.J.):**< 0.020 ohms.
**Dielectric Withstand Voltage:** 500 VAC (minimum).
**Insulation Resistance @ 500 VDC:** 2,000 megohms (minimum).
**Insulation Resistance (after MIL-STD-202 Salt Spray):** 1,000 megohms (minimum).
**Working Voltage:** 250 VAC, 140 VDC.
**Current Carry @ Working Voltage For 188 Plug (typical *D.O.M.J.):** 15.0 AMPS.
**Current Carry @ Working Voltage For 299 Plug (typical *D.O.M.J.):** 6.0 AMPS.
**Insert/Withdrawal Force:** *D.O.M.J..
**Soldering Requirement:** ANSI/J-STD-001.
**Temperature Range:** -40° to + 85° Centigrade
**U.L. Component Recognition File No.:** E118169.
**Life:** *D.O.M.J.
**Maximum Cable Size For 188 Plug:** 12 AWG stranded, up to .450" diameter.
**Maximum Cable Size For 299 Plug:** .290" diameter.

## MATERIALS

**Tip:** Nickel-plated copper alloy.
**Sleeve:** Nickel-plated copper alloy.
**Handle:** Nickel-plated copper alloy.
**Tip Terminal:** Copper alloy, electro tin-plated.
**Cable Clamp:** Copper alloy, electro tin-plated.
**Insulators For 188 Plug:** Thermojet plastic, thermoplastic, thermoplastic film, P.P.O.
**Insulators For 299 Plug:** Thermoplastic, thermoplastic film, glass epoxy.

*D.O.M.J. – Dependent On Mating Jack

**SERIES 299 PLUG**

| Part Number | Maximum Cable Size | Mating Jack |
|---|---|---|
| 299 | .290" Diameter | Z15J |

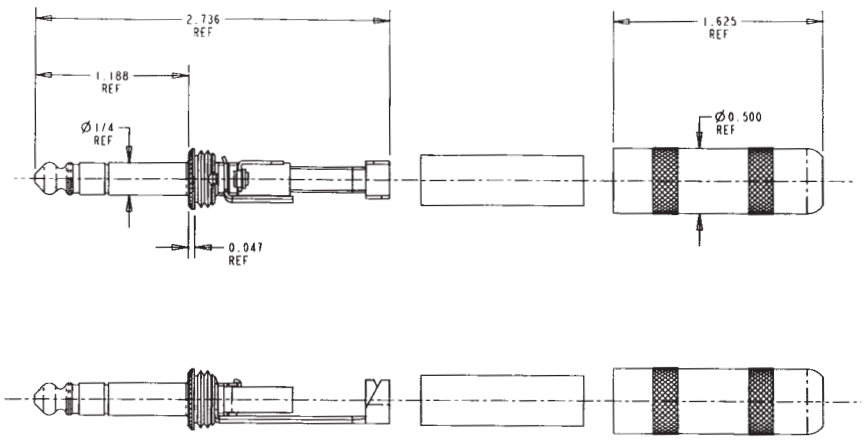


DIMENSIONS ARE FOR REFERENCE ONLY Inch / (mm)


® Registered trademark of Switchcraft, Inc.
Note: Contact your Switchcraft Representative for price and delivery

* Please visit the product pages on our website for the most up-to-date product information

# 1/4" COMMERCIAL PHONE PLUGS (continued)

## 3-CONDUCTOR/PLASTIC OR SHIELDED HANDLES

Number 60

Number 190

Number 190A

| Part Number | Terminals | Typical Mating Jack[2] | Handle | Handle Part Number |
|---|---|---|---|---|
| 60 | Solder Lug | 12B | Black | M1001 |
| ◊90 | | | Shielded | T10451 |
| 190 | | | Shielded | Handle: T10141<br>Insulator: A10063 |
| 190A,190B & 190BL | | | Shielded | 2-piece[1] |

1. 2-piece shielded handle with built-in cable clamp for .25" diameter cable. Handles: **Number T11231**, handle; **Number T11241**, cap; **Number A10064**, insulating tube; **Number T1125**, rubber washer.
2. Other Mating Plugs are available.

◊ Special order only. Contact Switchcraft.

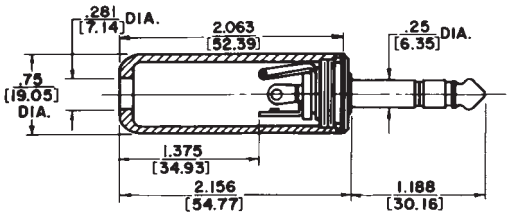


Number 60

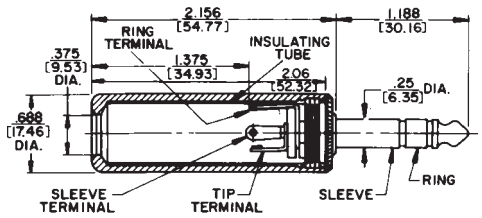


Number 90

# .206" COMMERCIAL PHONE PLUGS

## PHONE PLUGS FOR POLARIZED CONNECTIONS

Numbers S250, S255

### FEATURES

For applications requiring polarization (use of plugs of different sizes) to prevent insertion of incorrect equipment Littel-Plug® phone plugs featuring a sleeve and tip diameter of .206" are available. Mate with Number S128 Extension Jax® and S11 Littel Jax® jacks. Number S260 used interchangeable with Military Type M642/51 (Switchcraft Number 480) plugs. Mate with jacks S12B, S13B, M444, MT342B, MT344B and others.

### 2-CONDUCTOR PLUGS PART NUMBERS

| Part Number | Terminals | Typical Mating Jack[1] | Handle | Handle Part Number |
|---|---|---|---|---|
| S250 | Solder Lug & Cable Clamp | S11 | Black | M1002 |
| S280 | | | Shielded | T10581<br>A10071 |

### 3-CONDUCTOR PLUGS PART NUMBERS

| | | | | |
|---|---|---|---|---|
| S260 | Screw (Replacement Screw Part No. P10292) 2 required | S12B | Black | M1002 |
| S267 | Solder Lug & Cable Clamp | | | |

1. Switchcraft® mating jacks.

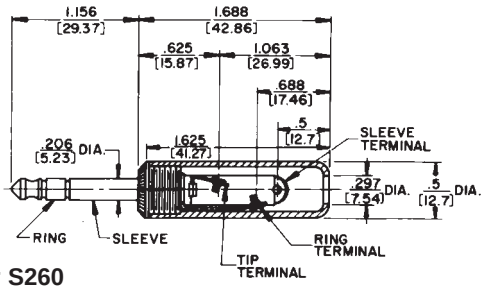


Number S260

DIMENSIONS ARE FOR REFERENCE ONLY Inch (mm)

* Please visit the product pages on our website for the most up-to-date product information

# 1/4" MITI-PLUG® AUDIO PLUGS

Number 174S

## FEATURES

- 2-conductor phone plug with full shielding and resistance to extremely rough usage for electrified audio instruments such as amplifiers, synthesizers power heads and speaker systems requiring high-quality audio plugs.
- 3-WAY CABLE STRAIN/STRESS RELIEF: For hours of trouble-free operation under heavy and abusive use. Plug body internally threaded for screw-on strain relief for cables from .29" to .30" diameter, and an additional clamp for additional relief (and for smaller cables). A heavy copper alloy-plated steel spring at point of entry to plug keeps cable from folding and pinching. Flex relief spring recommended for cables with diameters of .265" maximum only.
- TERMINATING: Tip wire soldered to tip–braid folded back and secured with cable clamp.
- IDENTIFICATION: Customer or OEM name of logo can be applied to plastic handles for a minimal charge for personalization. (Contact Switchcraft for details).
- SPECIAL HANDLE COLORS: Plastic handles molded in custom colors on special order. Contact Switchcraft for details.

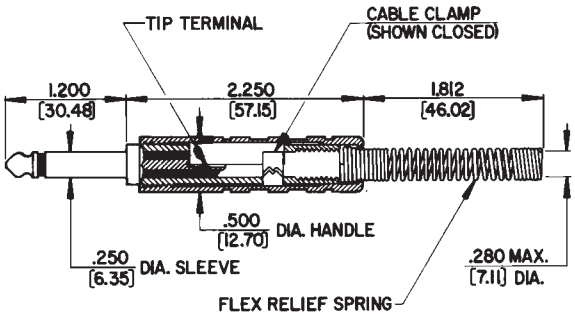


No. 174S

## SPECIFICATIONS

**Tip Rod & Body:** Copper alloy.
**Handle:** Copper alloy or plastic (black).
**Flex Relief Spring:** Plated spring steel.
(Part No. P2848).
**Strain Relief Clamp:** Plated steel.
(Part No. P2380).
**Insulation:** Thermoplastic, glass reinforced.

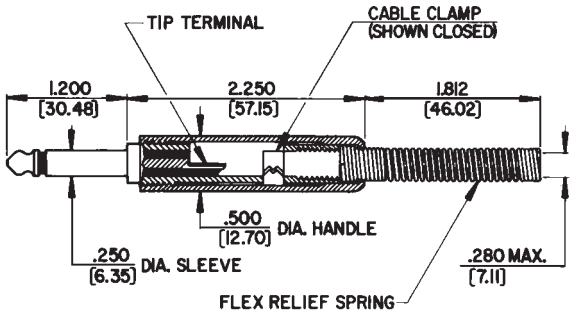


No. 176S

## 2-CONDUCTOR PLUGS

| Part Number | Handle | Flex Relief | Typical Mating Jack[1] | Handle Part Number |
|---|---|---|---|---|
| 173 | Black plastic | U-Clamp | 11 | M1483 |
| 174S | Copper Alloy | Spring | | T2313 |
| 175 | Copper Alloy | None | | T2313 |
| 176S | Black Plastic | Spring | | M1483 |
| 177S | Red Plastic | Spring | | |
| 178 | Black Plastic | None | | M1483 |
| ◊179 | Red Plastic | None | | |

1. Other mating plugs are available.
◊ Special order only. Contact Switchcraft.

DIMENSIONS ARE FOR REFERENCE ONLY Inch (mm)


® Registered trademark of Switchcraft, Inc.
Note: Contact your Switchcraft Representative for price and delivery

* Please visit the product pages on our website for the most up-to-date product information

# 1/4" FLAT PLUG PHONE PLUGS

Series 220

Series 230

Series S230

No. 238

## FEATURES

- Ideal where conventional long handled plugs are not suited to design of equipment. “Chassis-hugging” phone plugs allow cables to be brought out at right angles to equipment.
- Removable plastic cap for easy assembly of wire leads to either screw or solder lug terminals. Adapter clips on types 220 and 225 make it convenient to clamp standard phone tips to terminals.
- Terminals and body of plug mechanically interlocked, eliminating probability of any shifting.
- Cover is black or red plastic; plug body is a rugged assembly of all metal parts.
- One-piece tip rod staked into tip terminal to insure tightness, no disassembly of tip during use of plug.
- High grade insulation.
- Terminal identification permanently stamped into base plate adjacent to each terminal. Letter “T” denotes tip connection; “R” denotes ring sleeve; “S” terminal is the sleeve or body connection (no identification on types 228, 238).
- Cover molds designed so customer’s name or trademark inserts can be added. Call for details.

## SPECIFICATIONS

**Tip Rod and Sleeve:** Nickel-plated copper alloy.
**Terminals:** Tinned copper alloy.
**Handle:** Black or red plastic. Numbers 228 and 238, steel,nickel-plated.

## 2- OR 3-CONDUCTOR/SHIELDED HANDLE

| Part No. | Terminal | Typical Mating Jack[1, 2] | Conductor | Handle | Handle Part No. |
|---|---|---|---|---|---|
| **228** | Solder | 11 | 2 | Shielded | S3067 |
| **238** | Lug | 12B | 3 | | |

1. Nickel plated steel handle. Two screws (**Part Number P15823**) required to mount handle.
2. Other mating plugs are available.
3. Accommodates cables from .219" outside diameter to .250" outside diameter Ideal for music equipment use.

## 3-CONDUCTOR/PLASTIC HANDLE .206" DIAMETER SLEEVE AND TIP

| Part No. | Terminals | Typical Mating Jacks[1] | Handle | Handle Part No.[4] |
|---|---|---|---|---|
| **230** | Screw[3] | 12B | Black | M1005 |
| ◊**235** | Screw | | Red | |
| **237** | Solder | | Black | M1005 |
| ◊**239** | Solder | | Red | |
| ◊**S230** | Screw[3] | S12B[2] | Black | M1005 |

1. Switchcraft Part Number Other mating plugs are available.
2. **Part Number S230** is the commercial version of military Type PJ068 (Switchcraft **Number 480**) plug. Mates with S12B, S13B, M444, MT342B, MT344B Jacks and others. Other mating plugs are available.
   For applications where it is desirable to polarize, use plugs of different sizes to prevent insertion of incorrect equipment. Sleeve and tip diameter of these plugs is .206" Mates with S830, S1230 Extension-Jax® jacks and S12B, S13B Littel-Jax® phone jacks.
3. Switchcraft Replacement **Part Number P10292**. 3 screws required.
4. Three screws (**Number P1039**) required to mount handle.

◊ Special order only. Contact Switchcraft.

## 2-CONDUCTOR/PLASTIC HANDLE

| Part No. | Terminals | Typical Mating Jack[1] | Handle | Handle Part No.[3] |
|---|---|---|---|---|
| **220** | Screw | 11 | Black | M1005 |
| **225** | Screw | | Red | M1006 |
| **227** | Solder Lug | | Black | M1005 |
| **229** | Solder Lug | | Red | M1006 |
| **2P1509** | Screw | | Less Handle | – |

1. Switchcraft Part Number; see jack section for additional mating jacks.
2. Switchcraft replacement **Part Number P10292**. 2 screws required per plug. Clips for phone tips. **Part Number S1832**.
3. Three screws (**Number P1039**) required to mount handle.

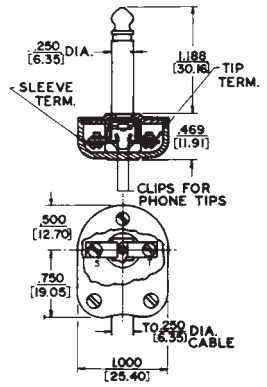


Series 220

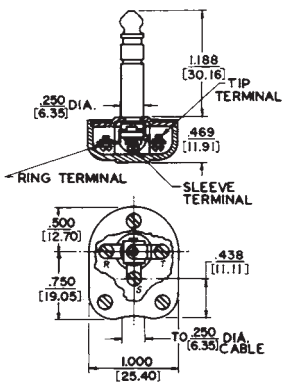


Series 230

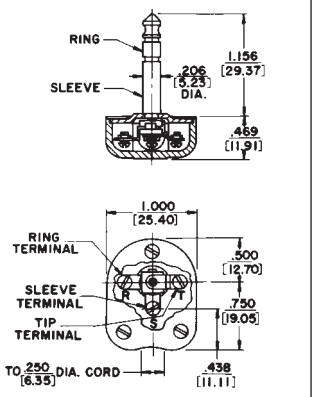


No. S-230

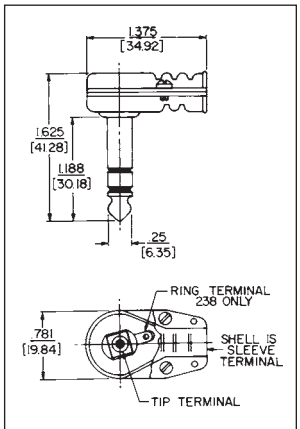


No. 238 (typical)

DIMENSIONS ARE FOR REFERENCE ONLY Inch (mm)

* Please visit the product pages on our website for the most up-to-date product information

# RIGHT-ANGLE AUDIO PHONE PLUG

## FEATURING 3-PIECE CONSTRUCTION AND FAST TERMINATION/ASSEMBLY

Switchcraft's 2- or 3-conductor right-angle audio phone plugs are designed for OEMs and users of commercial phone plugs. The plugs offer large terminals for easy wiring, and only three pieces to assemble - handle, insulator and finger/housing assembly and rugged reliability for stable, long-term, trouble-free operation.

226

### FEATURES

- Easy Termination: Large terminals accept up to 16 AWG wiring (cables up to .25 inch diameter)
- 3-Piece Assembly: Screw on the handle for quick and easy assembly; minimizes labor costs.
- Rugged: All metal exterior construction.
- Low Profile: Only 1/2 inch wide. Ideal for crowded, multi-channel panels. Right-angle handle minimizes space required behind equipment.
- Knurled Handles: Positive grip during connect/disconnect.
- Rugged Cable Clamp: Isolates pulling and twisting strains.

| Part Number | Description | Typical Mating Jack |
|---|---|---|
| 236 | 3-conductor 1/4" right-angle commercial plug. | 12B, 13B<br>112B, 113B |
| 226 | 2-conductor 1/4" right-angle commercial plug | 11, 12A<br>111, 112A |

### SPECIFICATIONS

**Tip, Rod and Handle:** Nickel-plated copper alloy.
**Housing/Sleeve:** Nickel-plated.
**Tip Terminal:** Tin-plated copper alloy.
**Sleeve (Clamp) Terminal:** Tin-plated steel.
**Insulation:** Thermoplastic.
**Dielectric Withstanding Voltage:** 500 Vac.
**Insulation Resistance:** 50,000 Megaohms minimum (initial).
**Operating Temperature:** -20°C to +65°C.

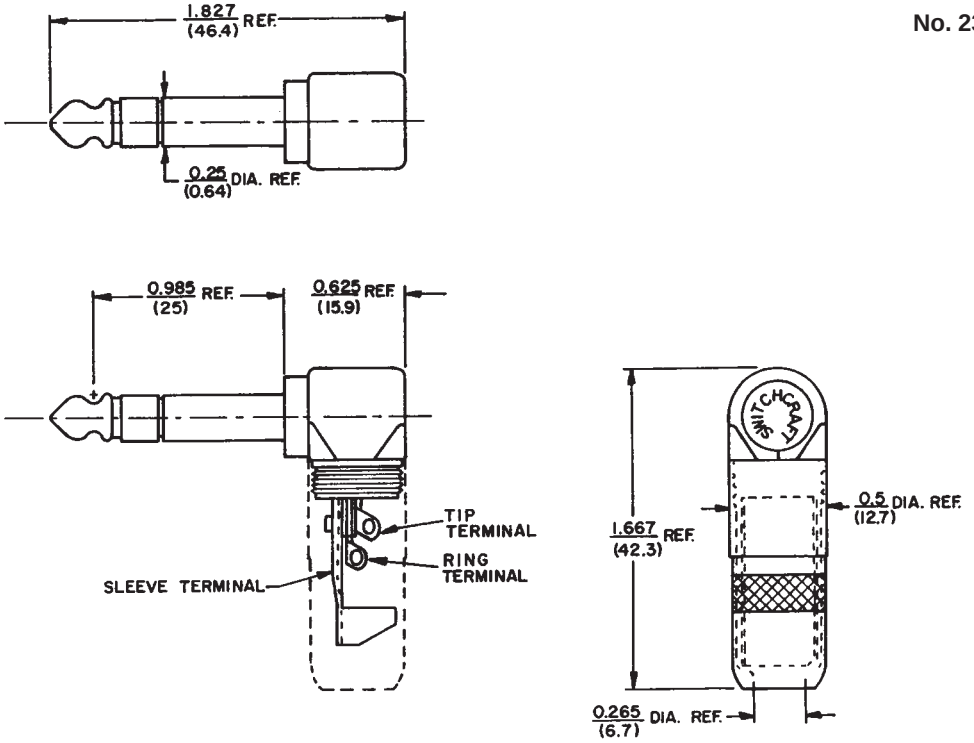


No. 236

DIMENSIONS ARE FOR REFERENCE ONLY Inch (mm)


® Registered trademark of Switchcraft, Inc.
Note: Contact your Switchcraft Representative for price and delivery

* Please visit the product pages on our website for the most up-to-date product information

# 1/4" LOCK-EXTENSION JACKS AND PLUGS

Number 133

Number 298

## FEATURES

Modified Littel-Plug® phone plug, 2- or 3-conductor, with coupling ring that can be threaded to thread projection of mating panel jack or to threaded end of the Lock-Extension Jax®. Locks connection after plug has been fully inserted into its mating panel jack or Extension Jax®.

Lock-Plug® makes proper contact to mating jack without tightening or attaching coupling ring, when rapid disconnect may be desired. Lock-Plug fits any standard jack with 3/8".-32 thread bushing with .094" of the bushing exposed. Lock-Extension Jax also will mate properly with standard phone plugs, where no “lock” requirement exists.

## SPECIFICATIONS

**Lock-Plug Tip Rod, Body, Handle and Coupling Ring:** Nickel-plated copper alloy.
**Terminals:** Brass, electro-tinned. Solder lug design, cable clamp part of sleeve terminal.
**Insulation:** Rigid plastic.

## LOCK-EXTENSION JAX®

**Housing (or Sleeve) and Handle:** Nickel-plated copper alloy.

## TERMINALS:

**Sleeve:** Plated steel. Tip and Ring: integral part of tip and ring springs.
**Springs:** Spring tempered copper alloy.
**Insulation:** Molded thermoplastic insert. Rigid plastic terminal washer.

## LOCK-PLUG

| Part Number | Cond. | Terminals | Typical Mating Jack | Handle Part Number | Notes |
|---|---|---|---|---|---|
| **282** | 2 | Solder Lug & Cable Clamp | 12A | T10581 A10071 | Similar to Switchcraft Number 297 Littel-Plug except with coupling ring. |
| **298** | 3 | | 12B, 133 | | |

## LOCK-EXTENSION JAX®

| Part Number | Cond. | Terminals | Typical Mating Plug | Handle Part Number | Notes |
|---|---|---|---|---|---|
| **133** | 3 | Solder Lug & Cable Clamp | 298 | T1485 | Sleeve terminal has cable clamp. Similar to Switchcraft® Number 131 Extension-Jax®. |

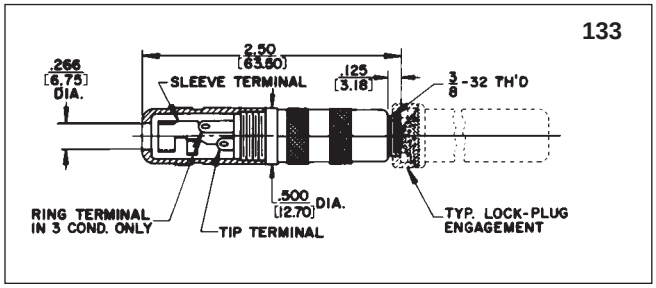


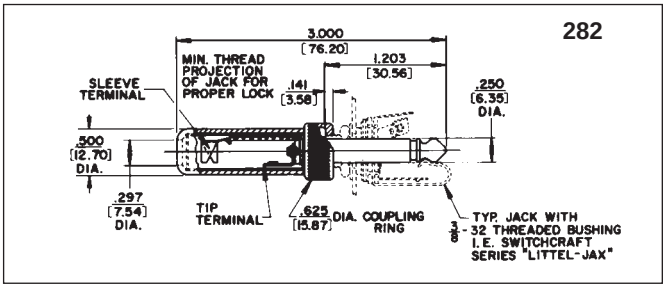


DIMENSIONS ARE FOR REFERENCE ONLY Inch (mm)

* Please visit the product pages on our website for the most up-to-date product information

# 3.5 MM HEAVY DUTY STEREO PLUGS

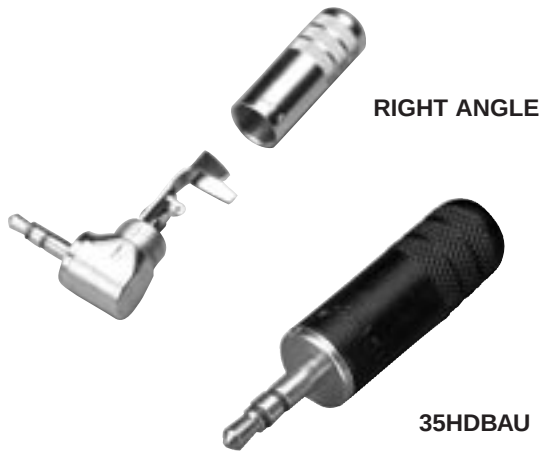


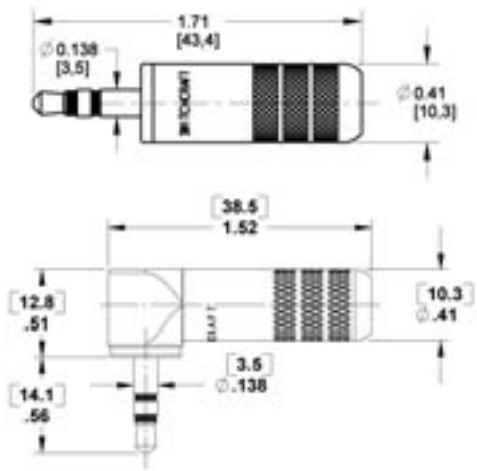


## 3.5MM STEREO PLUGS

### FEATURES

- Heavy duty 3.5mm plugs for audio, instrument, other applications.
- Large cable clamps for rugged use.
- Available in straight or right angle.
- One piece tip rods for added durability.
- Available in nickel, gold, and black finishes.
- Large solder terminals for easy assembly.
- Standard handle accommodates cable sizes up to 0.290" Optional 'S' versions accommodate cable sizes up to 0.175"

35HDBN - Black Handle, Nickel Plug
35HDBAU - Black Handle, Gold Plug
35HDNAU - Nickel Handle, Gold Plug
35HDNN - Nickel Handle, Nickel Plug

### BENEFITS

- One piece tip rod with flat for easy solderability.
- Compliments current line of 3.5 mm jacks.
- Insert molded plug finger.
- Heavy Duty cable clamp provides better strain relief for larger cables
- Longer cable clamp for easier plug assembly and more room for solder connections
- Knurl on the back of handle provides ergonomic gripping surface to tighten plug
- Tubular insulator included to prevent solder joints from contacting handle
- Longer handle for improved gripping surface and easy plug withdrawal from jack
- Large solder terminal for easy solderability

### MARKETS

- Audio
- Consumer electronic equipment
- Broadcast studios
- Home recording equipment
- Audio cable assembly manufacturers
- Instrumentation
- Test equipment

### SPECIFICATIONS

**Contact Resistance:** <0.020 ohms
**Dielectric Withstand Voltage:** - 250 VAC (min.)
**Insulation Resistance @ 500 VDC:** 2,000 megohms (min.)
**Working Voltage:** - 250 VAC, 140 VDC
**Current Carry @ Working Voltage:** 4 AMPS
**Insert/Withdrawal Force:** - Typical 2.5/2 pounds
**Temperature Range:** 0° to 66° Centigrade (operating)
Passed MIL-STD-202F Method 107G (Thermal Shock), and Method 201 (Vibration)
**Life:** - 5000 cycles
**Maximum Cable Size:** - .250? dia.

### MATERIALS

**Tip Rod:** Copper alloy, tin, or gold-plated
**Ring:** Copper alloy, nickel, or gold-plated
**Sleeve:** - Copper alloy, nickel, or gold-plated
**Handle:** Copper alloy, nickel, or gold-plated
**Cable Clamp:** - C.R.S., tin-plated
**Solder Terminal:** Copper alloy, tin-plated
**Tubular Insulator:** Clear plastic

### ORDERING INFORMATION

1. Order by part number
2. Contact Switchcraft for more information

| Part Number | Description | | |
|---|---|---|---|
| | Plug Finger | Handle | Notes |
| 35HDNN | Nickel | Nickel | |
| 35HDNNS | Nickel | Nickel | 0.175" handle opening |
| 35HDBN | Nickel | Black | |
| 35HDBNS | Nickel | Black | 0.175" handle opening |
| 35HDNAU | Gold | Nickel | |
| 35HDNAUS | Gold | Nickel | 0.175" handle opening |
| 35HDBAU | Gold | Black | |
| 35HDBAUS | Gold | Black | 0.175" handle opening |
| 35HDRANN | Nickel | Nickel | Right angle |
| 35HDRABAU | Gold | Black | Right angle |
| 35HDRAAU | Gold | Nickel | Right angle |

DIMENSIONS ARE FOR REFERENCE ONLY Inch (mm)


® Registered trademark of Switchcraft, Inc.
Note: Contact your Switchcraft Representative for price and delivery

* Please visit the product pages on our website for the most up-to-date product information

# .141" MINIATURE PHONE PLUGS

Number 750

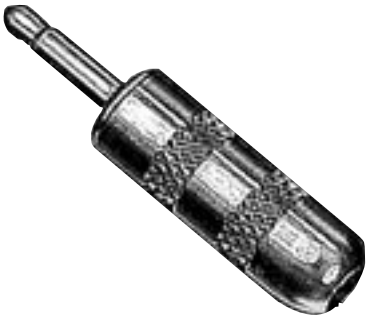

Number 780

## FEATURES

- Miniature 2-conductor Phone Plug for use with Switchcraft Tini-Jax® miniature phone jacks. About 1/2 the size of Switchcraft Littel-Plug® phone plug. Average net weight, 1/8 ounce.
- Various terminal combinations: (a) Dual purpose sleeve terminal may be clamped over metal braid or shielded cables; provides cable anchor. Easily soldered for perfect electrical connection. (b) Screw terminal design (no cable clamp) for cable. Terminals that can be more suitably connected by screws.
- 1-piece tip rod staked into mating terminals; no disassembly of tip during use of plug. Terminals and body of plug interlocked mechanically.
- Available in black or red plastic handles or brass nickel-plated handles for shielding. Can be used with cables up to .188" outside diameter.

## SPECIFICATIONS

**Sleeve, Tip and Body:** Nickel-plated copper alloy.
**Terminals:** Copper alloy, electro-tinned. Solder lug or screw type (Screws #0-80).
**Handle:** Molded black or red plastic.
Copper alloy, nickel-plated.

| Part Number | Terminals | Typical Mating Jack[1] | Handle | Part No. |
|---|---|---|---|---|
| 740 | Screw[2] | 41 | Black | M1055 |
| 745 | | | Red | M1056 |
| 750 | Solder Lug & Cable Clamp | | Black | M1055 |
| 755 | | | Red | M1056 |
| 2P1384 | | | Less Handle | – |
| 770 | Screw[2] | | Shielded | T13631 |
| 780 | Solder Lug & Cable Clamp | | Shielded | T13631 |

No. 740

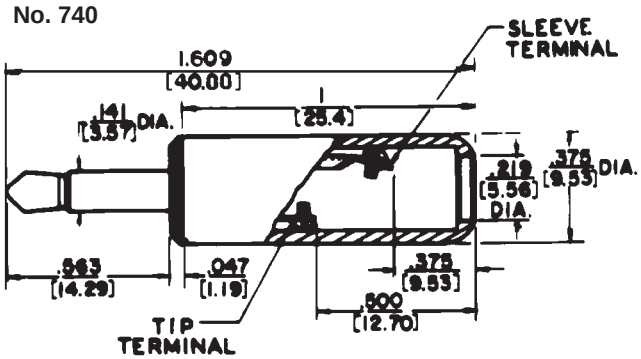


No. 750

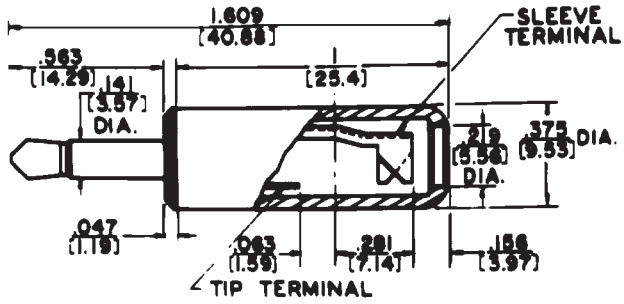


1. Other mating plugs are available.
2. Switchcraft replacement **Part Number P1153**. 2 screws required per plug.

DIMENSIONS ARE FOR REFERENCE ONLY Inch (mm)

* Please visit the product pages on our website for the most up-to-date product information

# .097" SUBMINIATURE PHONE PLUGS

Numbers 850, 880

Number 851

## FEATURES

- Subminiature, 2-conductor phone plugs are 1/3 the size of standard phone plugs, with the uniformity, dependability, and quality construction of Switchcraft Littel-Plug® and Tini Plug® phone plugs. 50 W soldering with 60/40 solder recommended for terminating.
- Switchcraft's 852, 853, 857, 858, 882 and 883 have a wider insulator between the tip and the sleeve. The wide insulator prevents the tip of the plug from shorting out between the tip spring and the sleeve of the jack during insertion.

Micro-Plug® PLUG - Sleeve terminal incorporates cable clamp. May be clamped over mated braid to anchor shielded cable; solders readily for perfect electrical connection. Terminals and plug body interlocked mechanically. Accommodates cable up to .125" Combined length, handle and tip: 1.106" outside diameter, .250" outside diameter handle.

LOCK Micro-Plug® PLUG - Similar to Micro-Plug plug, with addition of integral threaded collar that fastens to bushing of mating jack to prevent accidental disconnect. Requires at least .05" of exposed and usable thread on jack bushing to lock securely. Ideal for secure connections in critical medical and sensitive scientific instruments. Combined length, handle and tip: 1.046". Various molded cable assemblies incorporating Micro-Plug Subminiature phone plugs with plastic handles are available.

## SPECIFICATIONS

### MATERIALS

**Tip, Rod and Body (also integral Coupling Collar on Lock Micro-Plug):** Nickel-plated copper alloy.
**Insulation:** Molded thermoplastic.
**Sleeve Termination and Cable Clamp:** Tinned copper alloy.
**Handle:** Anodized aluminum; red, black or natural finish.

### MECHANICAL

**Life rating:** 5,000 insertion/withdrawals.
**Insertion/Withdrawal Force:** 1 pound (depending on mating jack).

### ELECTRICAL

**Insulation Resistance:** > 100 megohms
**Dielectric Withstanding Voltage:** 250V AC.

### ENVIRONMENTAL

**Thermal Range:** -55°C to +85°C (non-operating); -20°C to 65°C (operating).
**Thermal Shock:** Mil-Std 202, Method 107.
**Humidity:** Mil-Std 202, Method 106.
**Salt Spray:** Mil-Std 202, Method 101.

## MICRO-PLUG

| Part Number | Terminals | Mating Jacks[1] | Handle | Handle Part No. |
|---|---|---|---|---|
| 850 | Solder Lug | TR2A | Black | T18623 |
| 852 | | | Black | T18623 |
| 855 | | | Red | T18622 |
| 857 | | | Red | T18622 |
| 880 | | | Natural | T18621 |
| 882 | | | Natural | T18621 |
| 2P1419 | | | Less Handle | – |

## LOCK MICRO-PLUG

| Part Number | Terminals | Mating Jacks[1] | Handle | Handle Part No. |
|---|---|---|---|---|
| 851 | Solder Lug | TR2A | Black | T23123 |
| 853 | | | Black | T23123 |
| 856 | | | Red | T23122 |
| 858 | | | Red | T23122 |
| 881 | | | Natural | T23121 |
| 883 | | | Natural | T23121 |

1. Switchcraft Part Numbers. Other mating plugs are available.

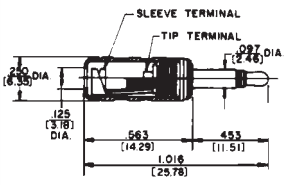


No. 850 (typical)

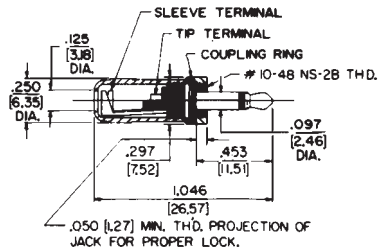


No. 851 (typical)

DIMENSIONS ARE FOR REFERENCE ONLY Inch (mm)


® Registered trademark of Switchcraft, Inc.
Note: Contact your Switchcraft Representative for price and delivery

* Please visit the product pages on our website for the most up-to-date product information

## AUDIO ADAPTERS

336A

336B

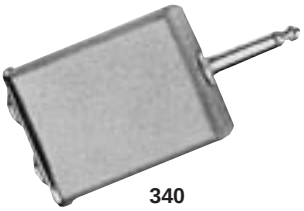
340

345A

349A

352A

361A

363

364A

365

370A

374

376

377

**Part Number 332A (Not shown):** 2-cond. phone jack input to old MC1M-style microphone connector output. Coupling ring can be screwed back to convert female microphone connector to male type. Shielded.

**Part Number 336A:** 2-conductor phone jack input to a phono plug output. Shielded.

**Part Number 336B:** 2-conductor phone jack input to phono jack output. Shielded.

**Part Number 340:** Two 2-conductor phone jack inputs connected in parallel to a 2-conductor phone plug output. Shielded.

**Part Number 345A:** Phono plug input to a standard 2-conductor phone plug output. Shielded.

**Part Number 349A:** Phono plug coupler. Phono Extension Jax® input to phono Extension Jax output. Shielded.

◊**Part Number 352A:** Stereo to monaural adapter. 3-conductor phone jack input to 2-conductor phone plug output. Extra-wide insulator prevents accidental damage should wrong connection be made. Shielded.

**Part Number 361A:** Phone plug coupler. Standard 1/4" inside diameter phone jack input to standard 1/4" inside diameter phone jack output. Ideal for connecting two cables terminated with 2-conductor phone plugs. Shielded.

**Part Number 362A (Not shown):** Phone plug coupler. Standard 3-cond. phone jack input to standard 3-cond. phone jack output. Ideal for connecting two cables terminated with 3-conductor phone jacks. Shielded.

**Part Number 363:** Phone jack coupler. Standard 1/4" 2-conductor phone plugs at each end to connect two cables terminated with phone Extension Jax. Shielded.

**Part Number 364A:** EIA Standard 2-conductor Tini-Jax® phone jack input to a standard 1/4" 2-conductor phone plug output. Shielded.

**Part Number 365:** EIA Standard 2-conductor Tini-Jax® phone jack input to a phono plug output. Shielded.

**Part Number 370A:** 2-conductor EIA Standard Tini-Plug® phone plug (.141" diameter finger) output to phono jack input. Adapts standard phono plug to small Tini-Plug. Shielded.

**Part Number 374:** 2-conductor phone jack input to a 2-conductor EIA Standard Tini-Plug (.141" diameter finger) phone plug output. Adapts standard phone plug to small Tini-Plug.

**Part Number 376:** EIA Standard Tini-Jax phone jack input to a 2-conductor Micro-Plug (.097" diameter finger) phone plug output. Adapts a Tini-Plug phone plug to a Micro-Plug phone plug.

**Part Number 377:** Micro-Jax phone jack input to a 2-conductor EIA Standard Tini-Plug (.141" diameter finger) phone plug output. Adapts a Micro-Plug phone plug to a Tini-Plug phone plug.

◊ Special order only. Contact Switchcraft.

DIMENSIONS ARE FOR REFERENCE ONLY Inch (mm)

* Please visit the product pages on our website for the most up-to-date product information

# PHONO PLUGS

## FEATURES

- Wide variety of styles for a wide range of applications.
- 3502A and 3502RA Series offer solid pin, large solder cups.
- 3558 Series utilize plastic handles for low cost applications.
- 3507 and 3504M have low-loss nylon insulators for RF applications. Can be used at 1 kW at 30 MHz.
- 3501M and 3501MC have the handle removed for tight spaces
- Options include nickel and gold plated, or black epoxy finishes.

## SPECIFICATIONS

### MATERIALS

**Pin:** Nickel or gold plated, copper alloy
**Sleeve:** Nickel or gold plated, copper alloy
**Handle:** Nickel or gold plated, or black epoxy finish, copper alloy (3558 Series: Thermoplastic)
**Cable Clamp:** Tin, copper alloy
**Insulator:** Rigid Plastic

### ELECTRICAL

**Current Carry @ Working Voltage (typical *D.O.M.J.):** 6A
**Contact Resistance (typical *D.O.M.J.):** < 0.20 Ohms
**Dielectric Withstanding Voltage:** 500 VAC min.
**Insulation Resistance @ 500VDC:** 2,000 megohms min
**Working Voltage:** 250VAC, 140VDC

### MECHANICAL

**Life:** *D.M.O.J
**Temperature Range:** -40∞ C to +85∞ C
*D.M.O.J. –Dependent On Mating Jack

DIMENSIONS ARE FOR REFERENCE ONLY Inch (mm)


® Registered trademark of Switchcraft, Inc.
Note: Contact your Switchcraft Representative for price and delivery

* Please visit the product pages on our website for the most up-to-date product information

## PHONO PLUGS (continued)

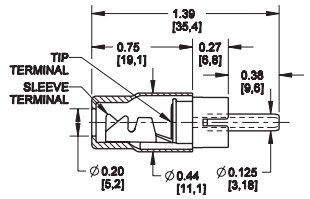


35581, 33582, 33585

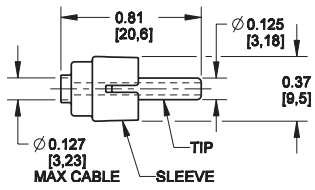


3501M & 3504M

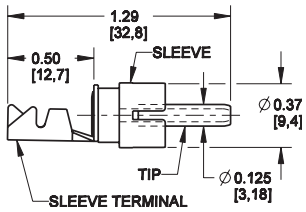


3501MC

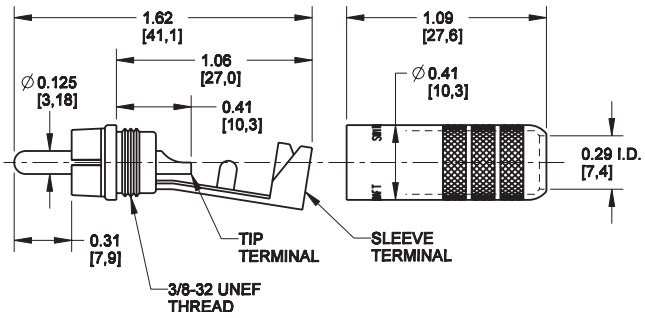


3502A

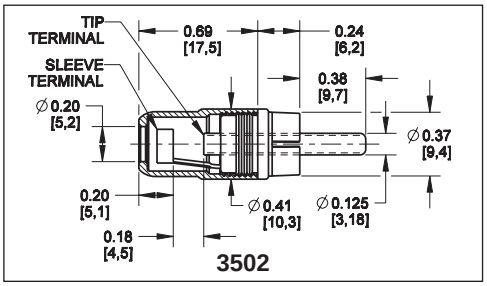


3502

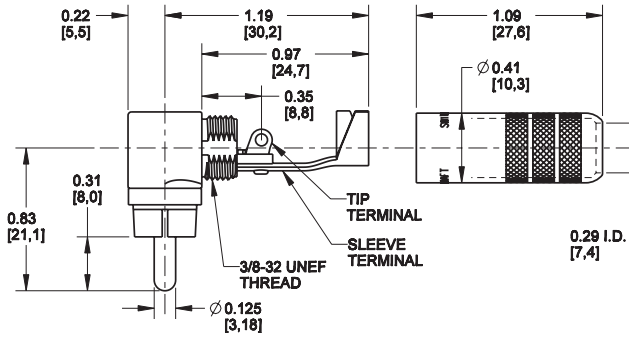


3502RA

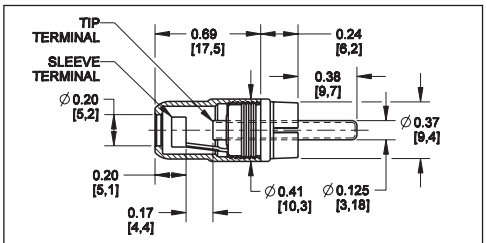


3507

| Part Number | Description Pin | Typical Handle | Notes | Mating Jack |
|---|---|---|---|---|
| **3502A** | Nickel | Nickel | | BP Series |
| **3502AAU** | Gold | Nickel | | BP Series |
| **3502ABAU** | Gold | Black | | BP Series |
| **3502RA** | Nickel | Nickel | Right angle | BP Series |
| **3502RABAU** | Gold | Black | Right angle | BP Series |
| **3502RAAU** | Gold | Nickel | Right angle | BP Series |
| **35581** | Nickel | Plastic | Red handle | BP Series |
| **35582** | Nickel | Plastic | Black handle | BP Series |
| **35585** | Nickel | Plastic | White handle | BP Series |
| **3502** | Nickel | Nickel | | BP Series |
| **3501M** | Nickel | | | BP Series |
| **3501MC** | Nickel | | Same as 3501M except with cable clamp | BP Series |
| **3504M** | Nickel | | Same as 3507 less cable clamp and handle | 3505F |
| **3507** | Nickel | Nickel | For RF applications | 3505F |
| **330F1** | Nickel | | 2 inline jacks to 1 male plug, 4" gray shielded cable | BP Series |
| **330F2** | Nickel | | 1 inline jack, 1 male plug to 1 male plug, 4" gray shielded cable | BP Series |

DIMENSIONS ARE FOR REFERENCE ONLY Inch (mm)

* Please visit the product pages on our website for the most up-to-date product information

# MINIATURE POWER PLUGS

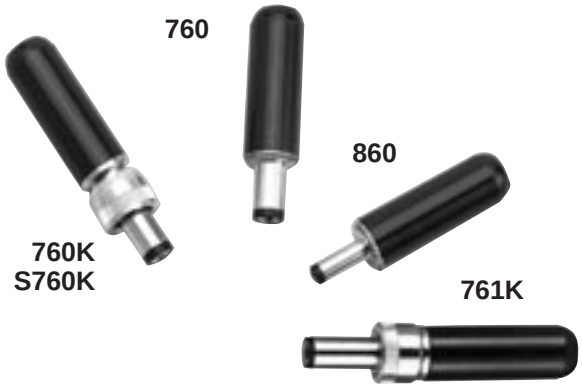


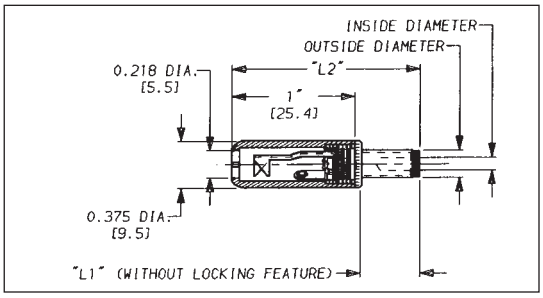


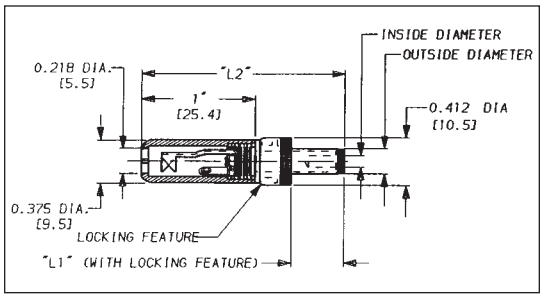


## FEATURES AND BENEFITS

- 2-conductor power jacks.
- Hollow center pin available in 3 pin diameters and 2 finger lengths (See chart below).
- Locking option available for added security in critical applications.
- Molded plastic handles available in black or red.
- Sleeve terminal serves as cord clamp.

## SPECIFICATIONS

**Plug Sleeve and Pin:** Nickel-plated copper alloy.
**Lockring:** Nickel-plated copper alloy.
**Lockring Thread Size:** 5/16 - 32 UNEF 2B.
**Finger Insulator:** Molded plastic.
**Insulating Washers:** Rigid plastic.
**Sleeve Terminal:** Copper alloy, electro-tinned.
**Handle:** Molded plastic.
**Handle Thread Size:** 5/16 - 24 UNF 2B.
**Electrical:** Current (Carry): 5 amps.

## ORDERING INFORMATION

1. Order by part number. 2. Contact Switchcraft for more information.
3. ◊ Indicates "special order" only.

INSIDE DIAMETER TOLERANCES (PLUGS)

| | |
|---|---|
| 860/865: | .050" (.050 - .053) / 1.27mm (1.27 - 1.35) |
| S760/S765*: | .080" (.080 - .084) / 2mm (2.03 - 2.13) |
| 760/765*: | .100" (.099 - .103) / 2.5mm (2.52 - 2.61) |

OUTSIDE DIAMETER TOLERANCES (PLUGS)

| | |
|---|---|
| 860/865: | .150" (.149 - .153) / 3.81mm (3.78 - 3.89) |
| S760/S765*: | .218" (.217 - .221) / 5.5mm (5.51 - 5.61) |
| 760/765*: | .218" (.217 - .221) / 5.5mm (5.51 - 5.61) |

*includes locking (k) versions

## PART NUMBERING and MATING CHART (Power plugs/Power jacks)

| Part Number | Inside Diameter | Outside Diameter | Length "L1" | Length "L2" | Locking Feature | Tip Insulator | Handle Color | Handle Part Number | Switchcraft® Mating Jack[1] |
|---|---|---|---|---|---|---|---|---|---|
| 760 | .100" | .218" | .375" | 1.42 | No | Black | Black | M1055 | 712A, RAPC712, RASH712, RASM712, PC712A, RA712A |
| 765 | .100" | .218" | .375" | 1.42 | No | Black | Red | M1056 | 712A, RAPC712, RASH712, RASM712, PC712A, RA712A |
| 760K | .100" | .218" | .375" | 1.7 | Yes | Black | Black | M1055 | 712A, PC712A |
| 761K | .100" | .218" | .475" | 1.8 | Yes | Black | Black | M1055 | L712A, PCL712A |
| 765K | .100" | .218" | .375" | 1.7 | Yes | Black | Red | M1056 | 712A, PC712A |
| 766K | .100" | .218" | .475" | 1.8 | Yes | Black | Red | M1056 | L712A, PCL712A |
| ◊2P1515 | .100" | .218" | .375" | 1.42 | No | Black | No Handle | No Handle | 712A, PC712A |
| S760 | .080" | .218" | .375" | 1.42 | No | White | Black | M1055 | 722A, RAPC722, RASH722, RASM722, PC722A, RA722A |
| S765 | .080" | .218" | .375" | 1.42 | No | White | Red | M1056 | 722A, RAPC722, RASH722, RASM722, PC722A, RA722A |
| S760K | .080" | .218" | .375" | 1.7 | Yes | Black | Black | M1055 | 722A, PC722A |
| S761K | .080" | .218" | .475" | 1.8 | Yes | Black | Black | M1055 | L722A, PCL722A |
| S765K | .080" | .218" | .375" | 1.7 | Yes | Black | Red | M1056 | 722A, PC722A |
| S766K | .080" | .218" | .475" | 1.8 | Yes | Black | Red | M1056 | L722A, PCL722A |
| 2P1624 | .080" | .218" | .375" | 1.42 | No | White | No Handle | No Handle | 722A, PC722A |
| 860 | .050" | .150" | .375" | 1.42 | No | Black | Black | M1055 | RAPC 732, RASH 732, RASM 732 |
| 865 | .050" | .150" | .375" | 1.42 | No | Black | Red | M1056 | RAPC 732, RASH 732, RASM 732 |

[1]See pages 130-134.

DIMENSIONS ARE FOR REFERENCE ONLY Inch (mm)


® Registered trademark of Switchcraft, Inc.
Note: Contact your Switchcraft Representative for price and delivery

* Please visit the product pages on our website for the most up-to-date product information

# PROFESSIONAL PUNCHDOWN TERMINAL (PPT)

**Our Patchbays Now Feature the New Professional Punchdown Terminal (PPT) Our Patchbays Have Just Rounded A New Corner**

Actually, the corners we rounded belong to our patchbays' revolutionary, new Professional Punchdown Terminal (PPT), making it perfectly compatible with the industry standard. We realized that achieving a new industry standard meant we couldn't cut any corners to get there.

The PPT design incorporates a split-barrel design and a more rugged, thicker housing to minimize the impact of repeated punchdowns. The split-barrel design eliminates the problems associated with the old "V-shaped" terminal designs. The PPT design distributes pressure evenly across both sides of the terminated wire, causing improved wire retention plus more reliable connections. The serrated teeth in the plastic housing firmly grip the wires, which also greatly improves wire retention. With the PPT, multiple wires can be terminated to a single contact, and a wide range of wire gauges can be used. Look for Switchcraft's PPT in our MTP and TTP Series of audio patchbays, and in our new Backpanel Series.

All Switchcraft audio patchbays incorporate heavy gauge materials and our high quality nickel-plated, steel framed jacks. Gold-plated, crossbar contacts come standard!

## MATERIALS

**Housing:** Thermoplastic (UL 94V-0)
**Contacts:** High strength copper alloy, tin plated
**Wire size:** Accommodates #22, 24, or 26 AWG, stranded or solid

| Accessories<br>Part Number | Description |
|---|---|
| **K459** | PPT replacement kit consists of 15 of each color* (IDC/IDC) |
| **K460** | PPT replacement kit consists of 15 of each color (IDC/wirewrap) |
| **PT1LA** | PPT impact punchdown tool |
| **PT2B** | Replacement bit for PT1LA tool |
| *Colors consist of red, black, white, yellow, blue, and orange. | |

DIMENSIONS ARE FOR REFERENCE ONLY Inch (mm)

* Please visit the product pages on our website for the most up-to-date product information

# FRONT ACCESS MTPFA/TTPFA SERIES

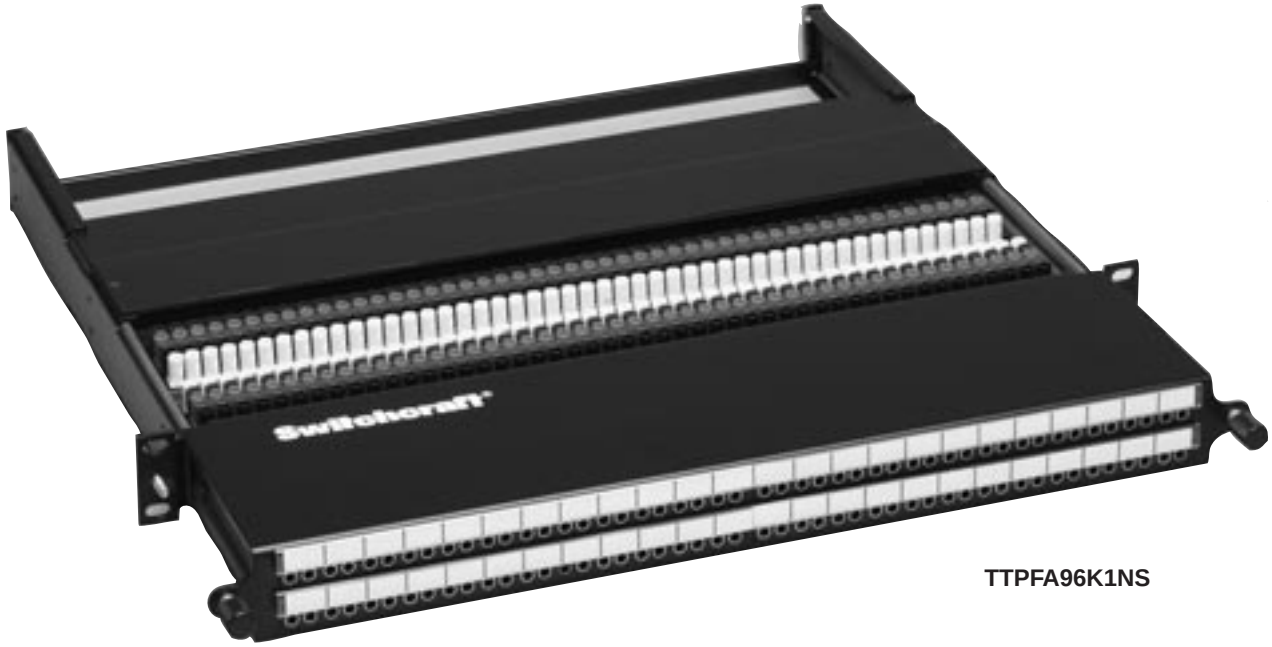


TTPFA96K1NS

The Front Access Series offers the end user the ease of re-terminating patchpoints from the front of the rack as opposed to the back. A slide out tray allows the user to slide out the punchdown terminals, and reconfigure the unit. An easy release mechanism on either side of the unit allows it to be pushed back into place and easy to grip locking nuts tighten the unit in place.

## FEATURES AND BENEFITS

- Easy slide-out tray slides forward for easy re-termination from the front of the rack
- Available with either 48 MT style or 96 TT style jacks in a 1RU space
- Attractive, corrosion resistant nickel-plated, steel frame jacks
- Gold-plated switching contacts reduce contact resistance, improves reliability
- Extra wide designation strips for easy channel identification
- Rugged, attractive black epoxy-finished steel chassis
- Configurations available include normals strapped and normals brought out

## SPECIFICATIONS

### MATERIALS (JACKS)

**Frame:** Nickel-plated steel
**Bushing:** Nickel-plated brass
**Tip, Ring and Shunt Springs:** Nickel silver with welded contacts
**Assembly Screws:** Nickel-plated steel
**Welded Contacts:** Gold alloy

### PANEL

**Frame:** C.R.S. black epoxy painted
**Designation Strips:** Black polycarbonate 94V-0
**Designation Strip Covers:** Clear polycarbonate
**Jack Inserts:** Thermoplastic 94V-0

### MECHANICAL

**Life:** 30,000 cycles
**Insertion Force:** 7 lbs. maximum
**Withdrawal Force:** 1 lb. minimum
**Operating:** -20°C to +65°C

### ELECTRICAL

**Jack Contact Resistance:** 30 milliohms initial maximum; 50 milliohms after life
**Jack Insulation Resistance:** 10,000 megohms maximum
**Dielectric Withstanding Voltage:** 500V at 60 Hz AC
**Working Voltage:** 100 milliamps or less; maximum 56.5 VDC

**Ordering Information**

| Part Number | Type of Jack | No. of Jacks | Description |
|---|---|---|---|
| **TTPFA96K1NS** | TT | 96 | 1.75" High, normals strapped |
| **TTPFA96K1NO** | TT | 96 | 1.75" High, normals brought out |
| **MTPFA48K1NS** | MT | 48 | 1.75" High, normals strapped |
| **MTPFA48K1NO** | MT | 48 | 1.75" High, normals brought out |

DIMENSIONS ARE FOR REFERENCE ONLY Inch (mm)


® Registered trademark of Switchcraft, Inc.
Note: Contact your Switchcraft Representative for price and delivery

* Please visit the product pages on our website for the most up-to-date product information

## FRONT ACCESS MTPFA/TTPFA SERIES (continued)

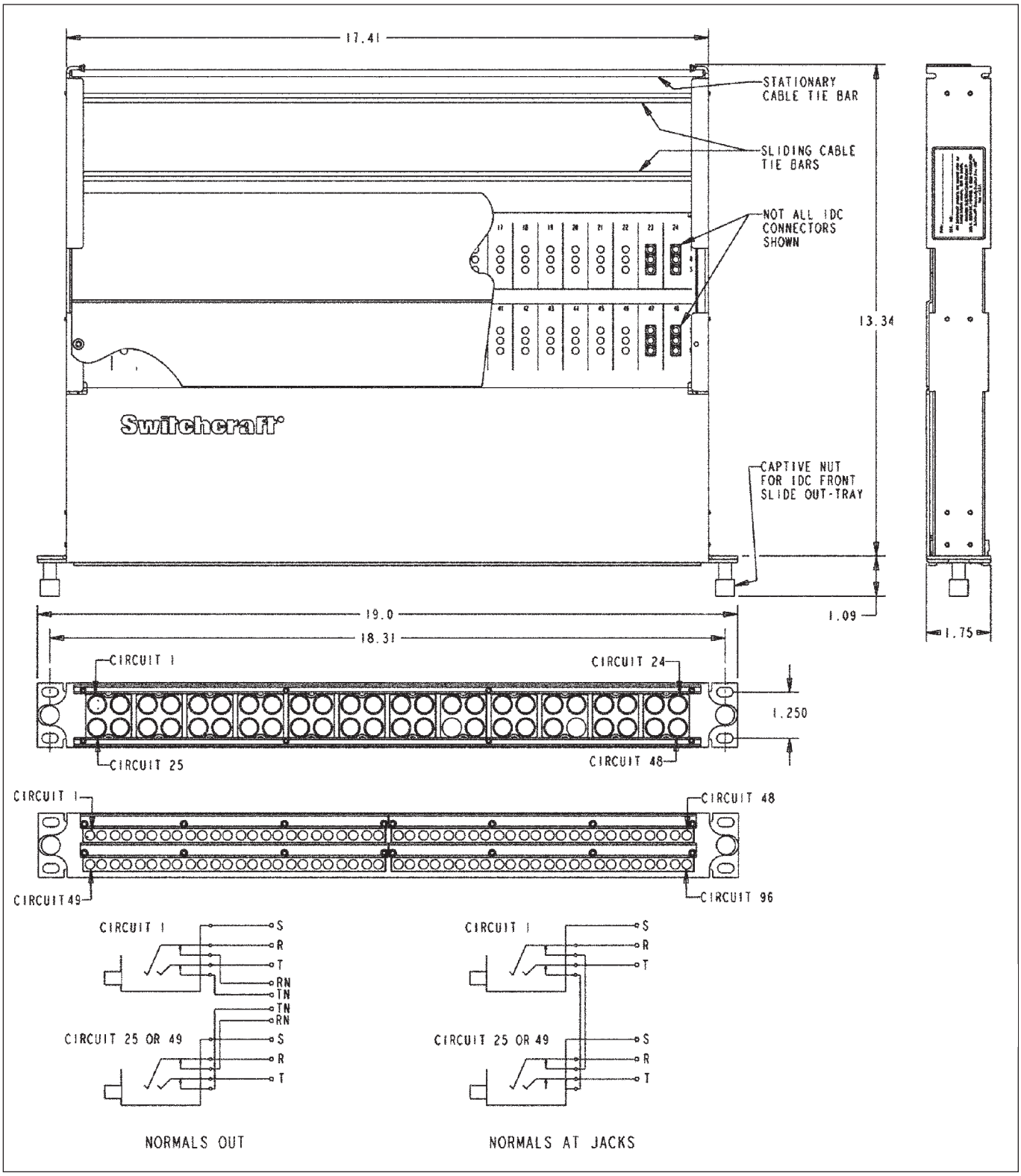


DIMENSIONS ARE FOR REFERENCE ONLY Inch (mm)

* Please visit the product pages on our website for the most up-to-date product information

# MTP48K WIRED AUDIO SERIES

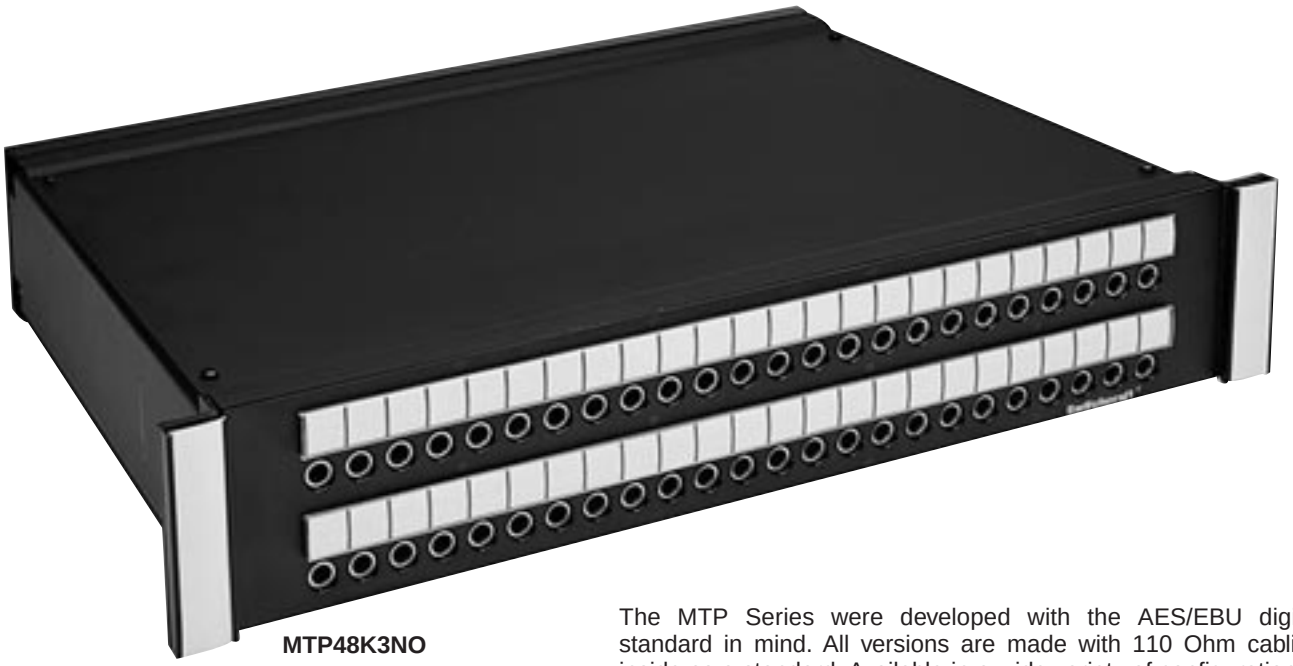

MTP48K3NO

The MTP Series were developed with the AES/EBU digital standard in mind. All versions are made with 110 Ohm cabling inside as a standard. Available in a wide variety of configurations.

## FEATURES AND BENEFITS

- Unit features 48 MT style jacks in either 1RU (1.75"H) or 2RU (3.5"H) spaces
- All versions utilize AES/EBU wiring for complete digital compatibility
- Attractive, corrosion resistant nickel-plated, steel frame jacks
- Gold-plated switching contacts reduce contact resistance, improve reliability
- Rugged, attractive black epoxy-finished steel chassis
- Extra wide designation strips for easy channel identification
- 1RU version configurations include normals strapped and normals brought out
- 2RU version configurations include normals strapped, normals brought out, and sleeve normals brought out

## SPECIFICATIONS

### MATERIALS

### JACKS

**Frame:** Nickel-plated steel
**Bushing:** Nickel-plated brass
**Tip, Ring and Shunt Springs:** Nickel silver with welded contacts
**Assembly Screws:** Zinc-plated steel
**Welded Contacts:** Gold alloy

### PANEL

**Front Channel:** Black anodized aluminum
**Frame:** C.R.S. black epoxy painted
**Designation Strips:** Black polycarbonate 94V-0
**Designation Strip Covers:** Clear polycarbonate
**Jack Inserts:** Thermoplastic polyester

### MECHANICAL

**Life:** 30,000 cycles
**Insertion Force:** 7 lbs. maximum
**Withdrawal Force:** 1 lb. minimum
**Environmental:** O°C to +50°C

### ELECTRICAL

**Contact Resistance**: 30 milliohms maximum initial
**Insulation Resistance:** 10,000 megohms maximum
**Dielectric Withstanding Voltage:** 500 VAC at 60 Hz
**Working Voltage:** 140 VDC maximum
**Current Rating:** 100 milliamps

**Ordering Information**

| Part Number | Type of Jack | No. of Jacks | Description |
|---|---|---|---|
| **MTP48K1NS** | MT | 48 | 1.75" High, normals strapped |
| **MTP48K3NS** | MT | 48 | 3.5" High, normals strapped |
| **MTP48K1NO** | MT | 48 | 1.75" High, normals brought out |
| **MTP48K3NO** | MT | 48 | 3.5" High, normals brought out |
| **MTP48K3SNO** | MT | 48 | 3.5" High, sleeve normals out |

DIMENSIONS ARE FOR REFERENCE ONLY Inch (mm)


® Registered trademark of Switchcraft, Inc.
Note: Contact your Switchcraft Representative for price and delivery

* Please visit the product pages on our website for the most up-to-date product information

## MTP48K WIRED AUDIO SERIES (continued)

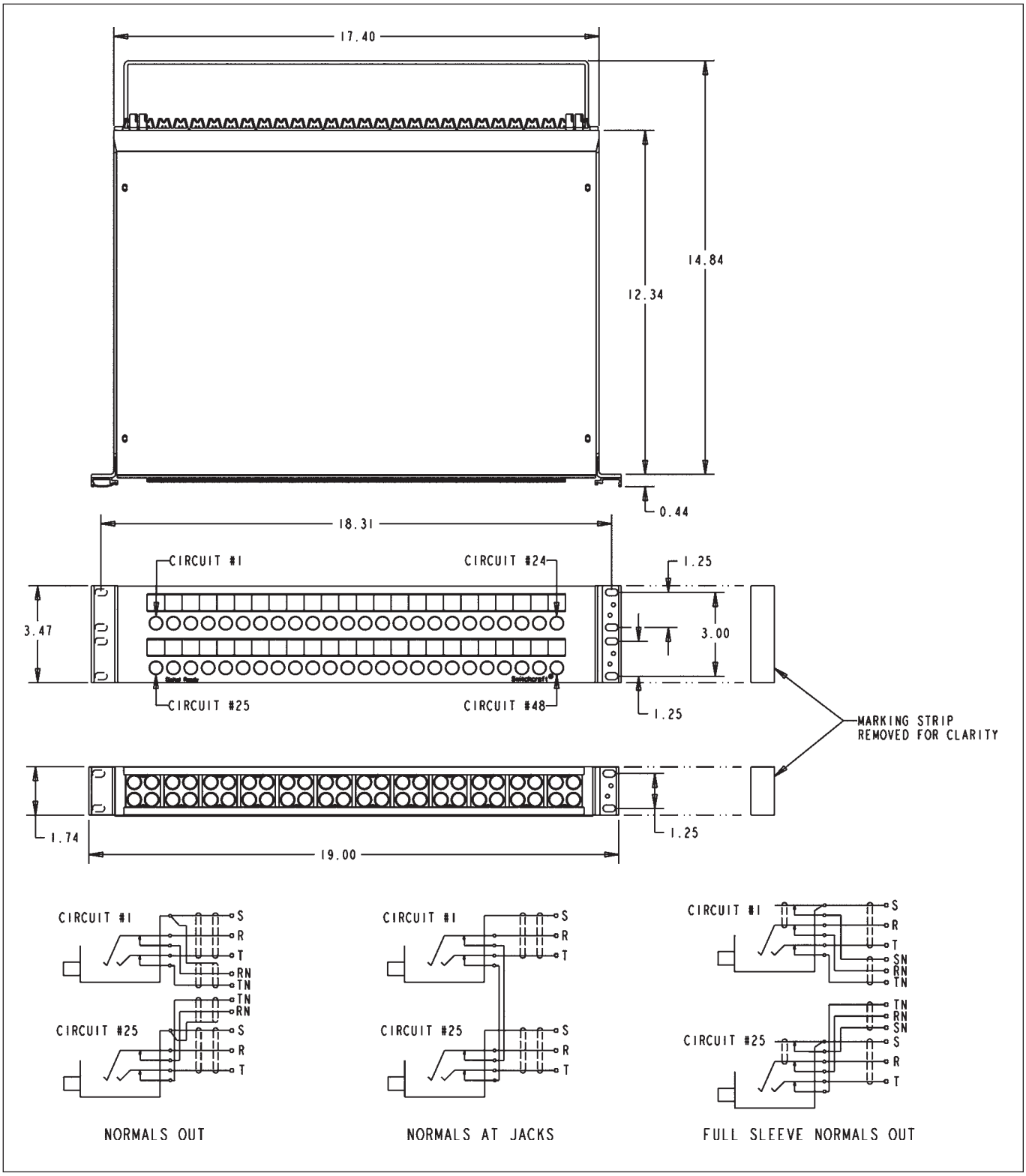


DIMENSIONS ARE FOR REFERENCE ONLY Inch (mm)

* Please visit the product pages on our website for the most up-to-date product information

# TTP96K WIRED AUDIO SERIES

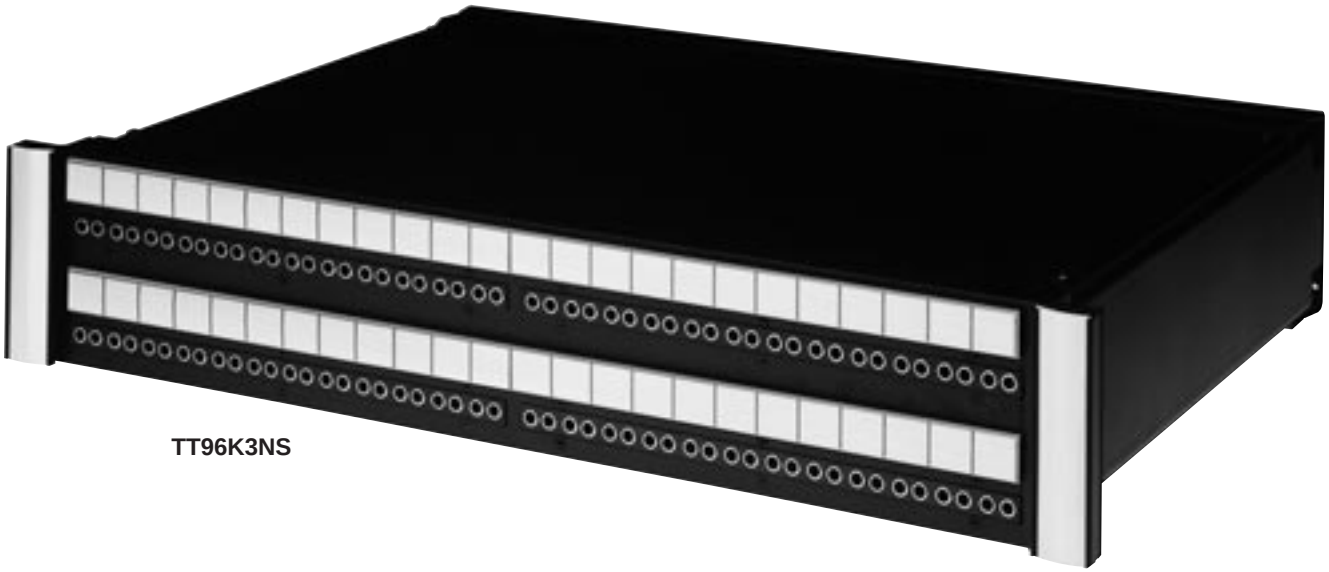

TT96K3NS

The TTP96K Series was developed with the AES/EBU digital standard in mind. As a standard the TTP96K utilizes 110 Ohm cabling inside.

## FEATURES AND BENEFITS

- Unit features 96 TT style jacks in 2RU (3.5"H) space
- Utilizes AES/EBU wiring for complete digital compatibility
- Attractive, corrosion resistant nickel-plated, steel frame jacks
- Gold-plated switching contacts reduce contact resistance, improve reliability
- Rugged, attractive black epoxy-finished steel chassis
- Extra wide designation strips for easy channel identification

## SPECIFICATIONS

## MATERIALS

### JACKS

**Frame:** Nickel-plated steel
**Bushing:** Nickel-plated brass
**Tip, Ring and Shunt Springs:** Nickel silver with welded contacts
**Assembly Screws:** Zinc-plated steel
**Welded Contacts:** Gold alloy

### PANEL

**Front Channel:** Black anodized aluminum
**Frame:** C.R.S. black epoxy painted
**Designation Strips:** Black polycarbonate 94V-0
**Designation Strip Covers:** Clear polycarbonate
**Jack Inserts:** Thermoplastic polyester

## MECHANICAL

**Life:** 30,000 cycles
**Insertion Force:** 7 lbs. maximum
**Withdrawal Force:** 1 lb. minimum
**Environmental:** O°C to +50°C

## ELECTRICAL

**Contact Resistance:** 30 milliohms maximum initial
**Insulation Resistance:** 10,000 megohms maximum
**Dielectric Withstanding Voltage:** 500 VAC at 60 Hz
**Working Voltage:** 140 VDC maximum
**Current Rating:** 100 milliamps

**Ordering Information**

| Part Number | Type of Jack | No. of Jacks | Description |
|---|---|---|---|
| **TTP96K3NS** | TT | 96 | 3.5" High, normals strapped |

DIMENSIONS ARE FOR REFERENCE ONLY Inch (mm)



® Registered trademark of Switchcraft, Inc.
Note: Contact your Switchcraft Representative for price and delivery

* Please visit the product pages on our website for the most up-to-date product information

## TTP96K WIRED AUDIO SERIES (continued)

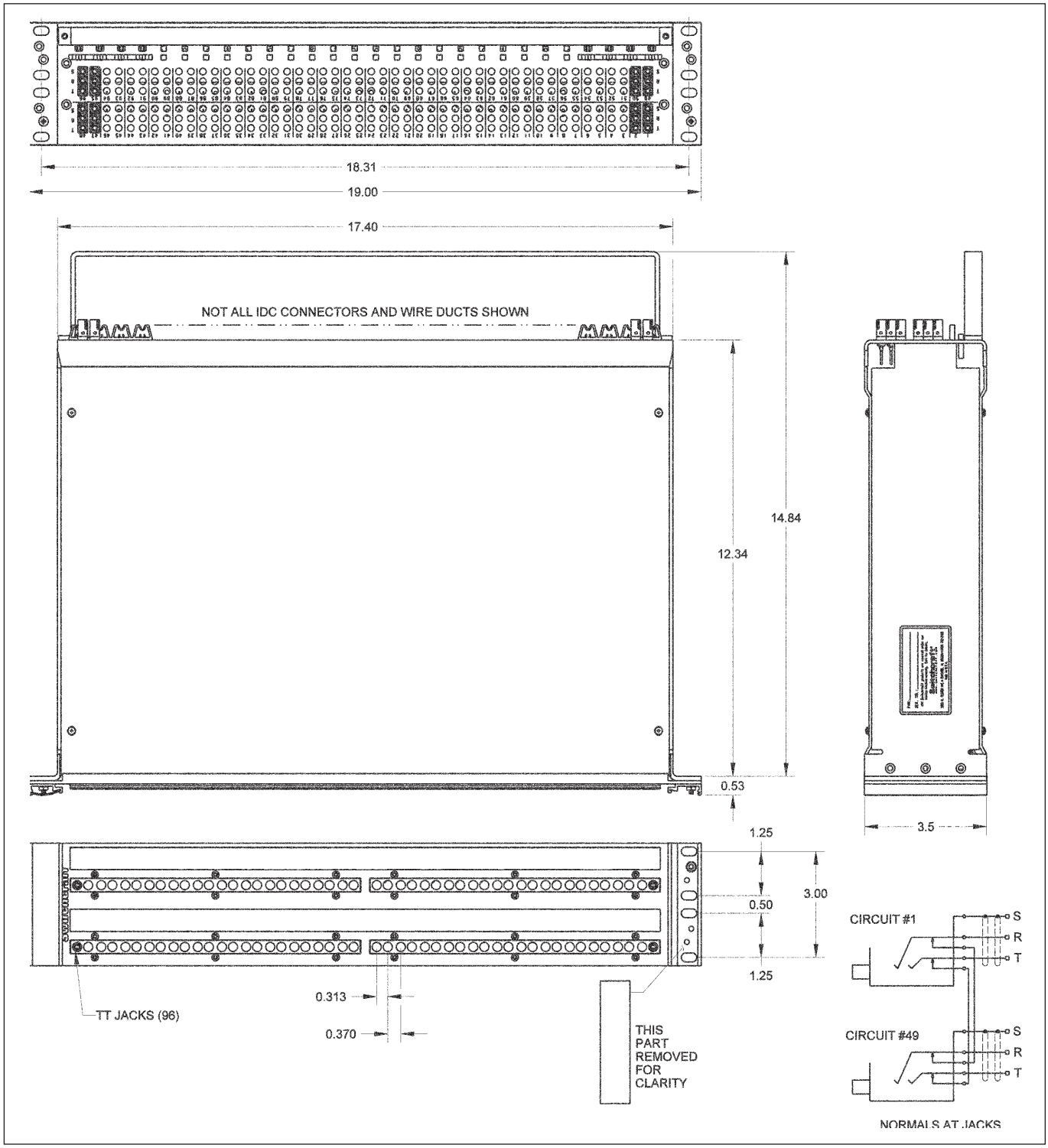


DIMENSIONS ARE FOR REFERENCE ONLY Inch (mm)

* Please visit the product pages on our website for the most up-to-date product information

# MTPH/TTPH HARNESS AUDIO SERIES

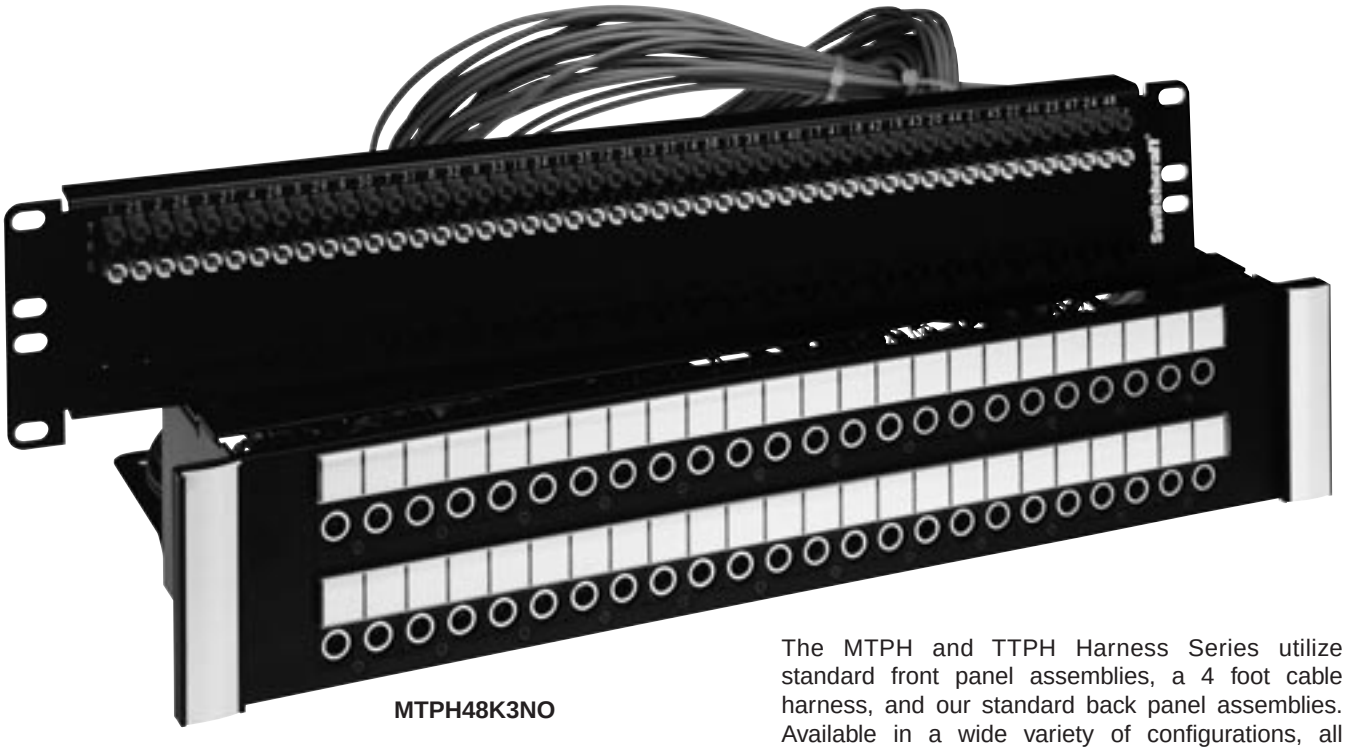

MTPH48K3NO

The MTPH and TTPH Harness Series utilize standard front panel assemblies, a 4 foot cable harness, and our standard back panel assemblies. Available in a wide variety of configurations, all are terminated to our PPT's on the back panel. Primarily used where the back panels must either be mounted into a rack, or brought back to the front for easier access. Custom cable lengths can also be supplied. Contact the factory for details.

## FEATURES AND BENEFITS

- Units feature either 48 MT style jacks or 96 TT style jacks on the front panels, to a 4 foot harness, out to a backpanel with PPT's
- All versions utilize AES/EBU wiring for complete digital compatibility
- Attractive, corrosion resistant nickel-plated, steel frame jacks
- Gold-plated switching contacts reduce contact resistance, improve reliability
- Rugged, attractive black epoxy-finished steel frame chassis
- Extra wide designation strips for easy channel identification

## SPECIFICATIONS

### MATERIALS

### JACKS

**Frame:** Nickel-plated steel
**Bushing:** Nickel-plated brass
**Tip, Ring and Shunt Springs:** Nickel silver with welded contacts
**Assembly Screws:** Zinc-plated steel
**Welded Contacts:** Gold alloy

### PANEL

**Front Channel:** Black anodized aluminum
**Frame:** C.R.S. black epoxy painted
**Designation Strips:** Black polycarbonate 94V-0
**Designation Strip Covers:** Clear polycarbonate
**Jack Inserts:** Thermoplastic polyester

### MECHANICAL

**Life:** 30,000 cycles
**Insertion Force:** 7 lbs. maximum
**Withdrawal Force:** 1 lb. minimum
**Environmental:** O°C to +50°C

### ELECTRICAL

**Contact Resistance:** 30 milliohms maximum initial
**Insulation Resistance:** 10,000 megohms maximum
**Dielectric Withstanding Voltage:** 500 VAC at 60 Hz
**Working Voltage:** 140 VDC maximum
**Current Rating:** 100 milliamps

DIMENSIONS ARE FOR REFERENCE ONLY Inch (mm)


® Registered trademark of Switchcraft, Inc.
Note: Contact your Switchcraft Representative for price and delivery

* Please visit the product pages on our website for the most up-to-date product information

## MTPH/TTPH HARNESS AUDIO SERIES (continued)

| Ordering Information<br>Part Number | Type of Jack | No. of Jacks | Description |
|---|---|---|---|
| **MTPH48K1NS** | MT | 48 | 1.75" High front panel, 4' Harness, |
| | | | 3.5" High back panel, normals strapped |
| **MTPH48K1NO** | MT | 48 | 1.75" High front panel, 4' Harness, |
| | | | 3.5" High back panel, normals brought out |
| **MTPH48K3NS** | MT | 48 | 3.5" High front panel, 4' Harness, |
| | | | 3.5" High back panel, normals strapped |
| **MTPH48K3NO** | MT | 48 | 3.5" High front panel, 4' Harness, |
| | | | 3.5" High back panel, normals brought out |
| **MTPH48K3SNO** | MT | 48 | 3.5" High front panel, 4' Harness,<br>3.5" High back panel, sleeve normals brought out |
| **TTPH96K1NS** | TT | 96 | 1.75" High front panel, 4' Harness, |
| | | | 3.5" High back panel, normals strapped |
| **TTPH96K1NO** | TT | 96 | 1.75" High front panel, 4' Harness, |
| | | | 5.25" High back panel, normals brought out |
| **TTPH96K3NS** | TT | 96 | 3.5" High front panel, 4' Harness, |
| | | | 3.5" High back panel, normals strapped |
| **TTPH96K3NO** | TT | 96 | 3.5" High front panel, 4' Harness,<br>5.25" High back panel, normals brought out |

See Page 172 for Mechanical Drawings

DIMENSIONS ARE FOR REFERENCE ONLY Inch (mm)

* Please visit the product pages on our website for the most up-to-date product information

## MTPH/TTPH HARNESS AUDIO SERIES (continued)

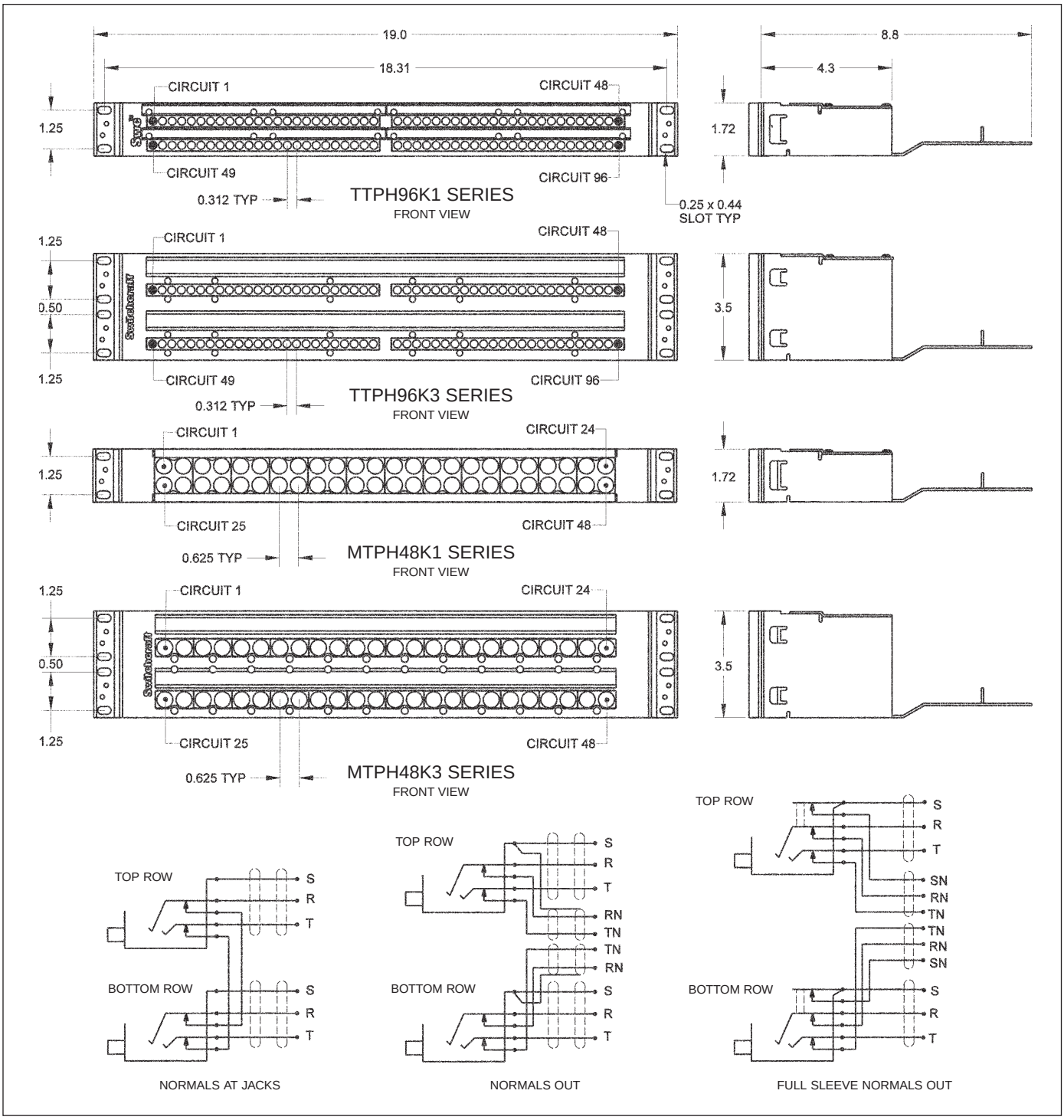


DIMENSIONS ARE FOR REFERENCE ONLY Inch (mm)



® Registered trademark of Switchcraft, Inc.
Note: Contact your Switchcraft Representative for price and delivery

* Please visit the product pages on our website for the most up-to-date product information

## MTPH/TTPH HARNESS AUDIO SERIES (continued)

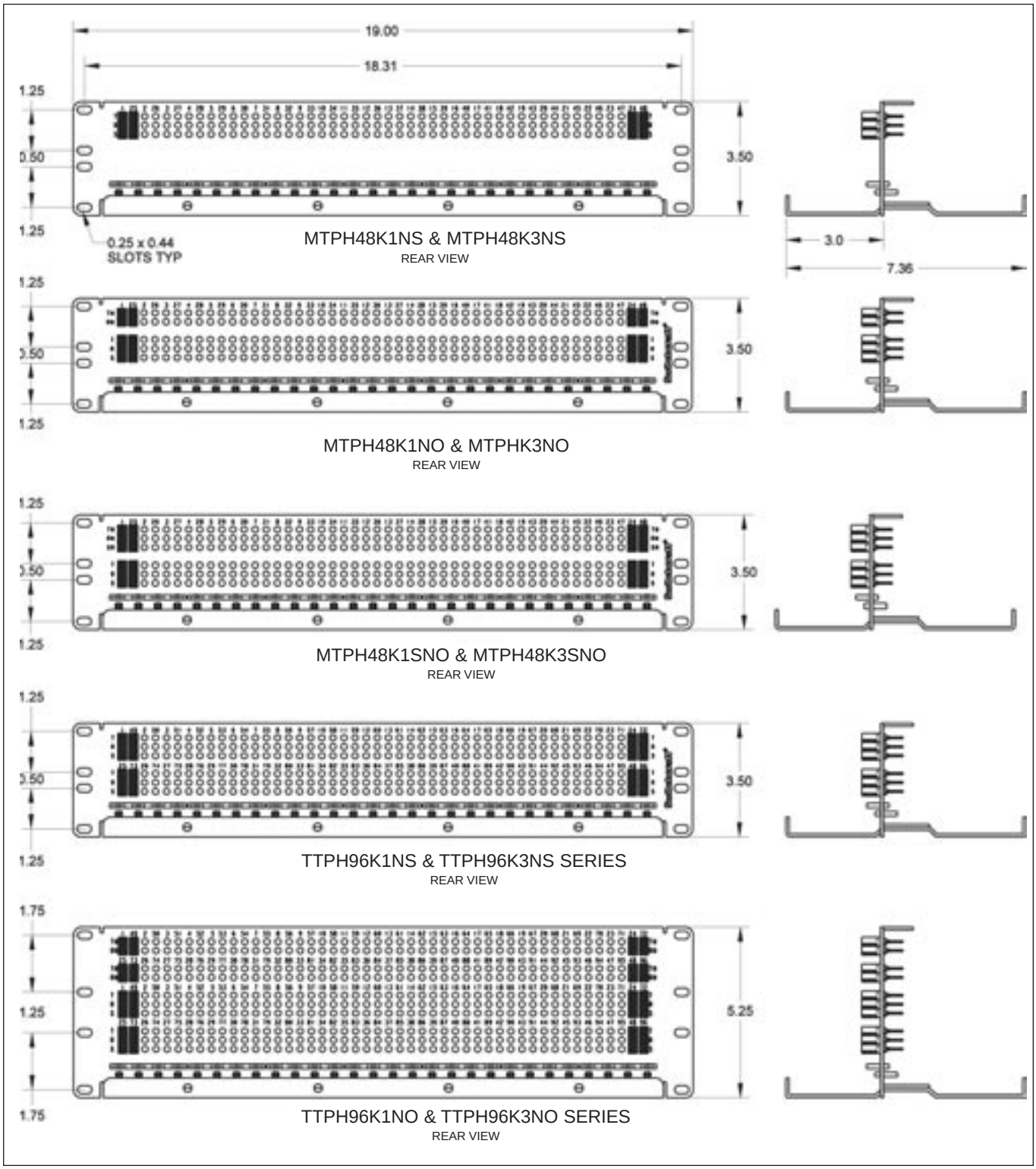


DIMENSIONS ARE FOR REFERENCE ONLY Inch (mm)

* Please visit the product pages on our website for the most up-to-date product information

# MTPBP/TTPBP BACKPANEL SERIES

**MTPH48K3BPNS**

The Backpanel Series offers the end user the flexibility of configuring their own patchbay, or to use as a central patchpoint location. The backpanels utilize the PPT punchdown and come with a rugged cable tray.

## FEATURES AND BENEFITS

- Allows for custom patchbay configurations or central patching points
- PPTs have IDCs on both sides for easy installation
- Rugged, attractive black epoxy-finished steel chassis
- Cable trays allow for mounting and securing terminated cable

## SPECIFICATIONS

**Panel thickness:** .093"
**Mounting hole diameter:** .187"
**Mounting hole spacing (48 IDCs/row):** .340" (Horizontal) x .275" (Vertical)
**Mounting hole spacing (52 IDCs/row):** .320" (Horizontal) x .275" (Vertical)
**Wire size:** #22, 24, 26 AWG Stranded or Solid (IDC termination)

## MATERIALS

**Housing:** Thermoplastic (UL 94V-0)
**Contacts:** High strength copper alloy
**Backpanels:** Black Epoxy coated C.R.S.
**Cable Tray:** Black Epoxy coated C.R.S.

**Ordering Information**

| Part Number | Sets of PPT Terminals | Height | Description |
|---|---|---|---|
| **MTP48K3BPNS** | 48 | 3.5" | T, R, S |
| **MTP48K3PBNO** | 48 | 3.5" | T, R, S, TN, RN |
| **MTP52K3BPNO** | 52 | 3.5" | T, R, S, TN, RN |
| **MTP24K7** | 24 x 2 | 7.0" | +, -, S |
| **TTP96K3BPNS** | 96 | 3.5" | T, R, S |
| **TTP96K5BPNS** | 96 x 2 | 5.25" | T, R, S, TN, RN |

DIMENSIONS ARE FOR REFERENCE ONLY Inch (mm)


® Registered trademark of Switchcraft, Inc.
Note: Contact your Switchcraft Representative for price and delivery

* Please visit the product pages on our website for the most up-to-date product information

## MTPBP/TTPBP BACKPANEL SERIES (continued)

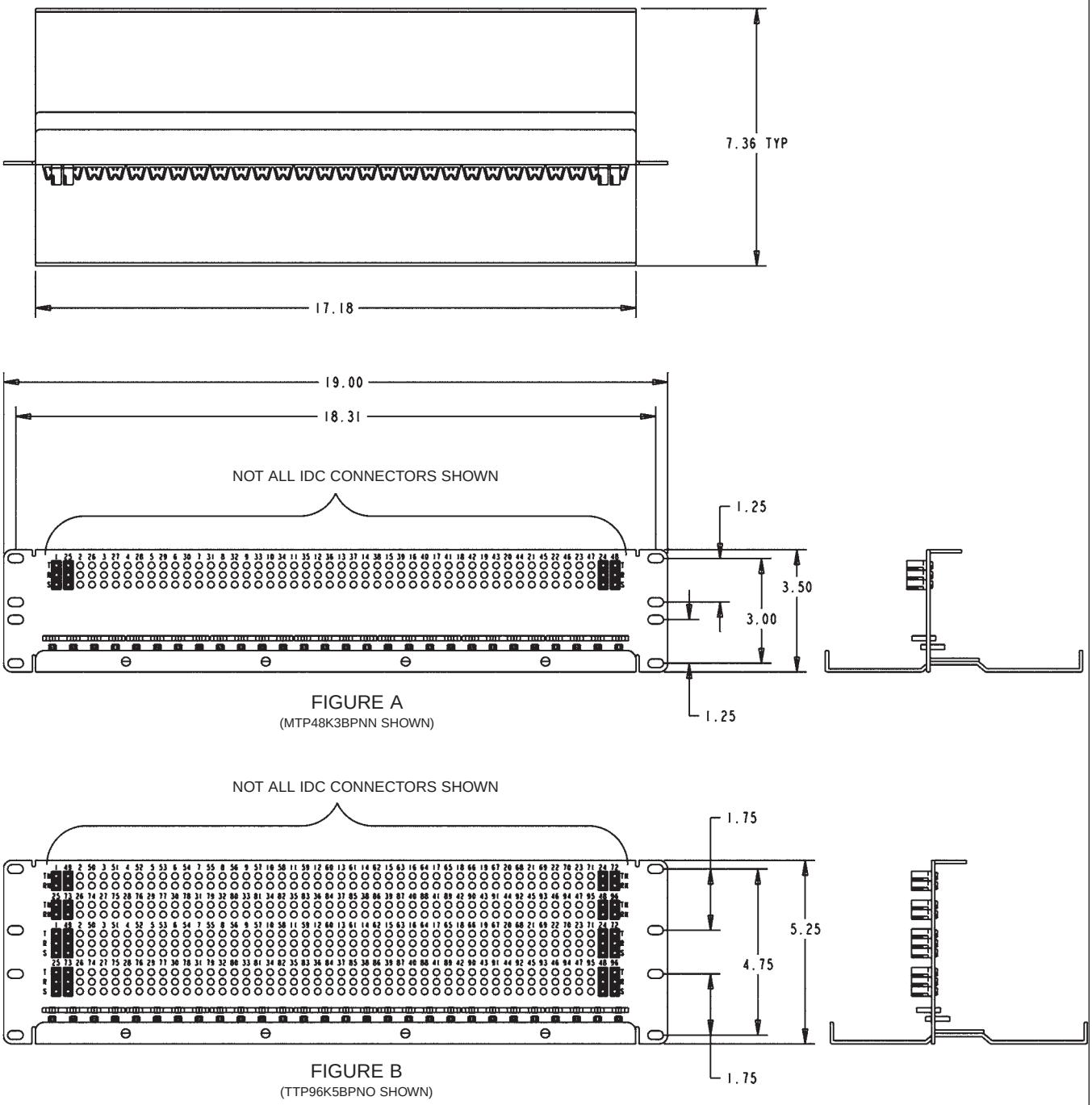


FIGURE A
(MTP48K3BPNN SHOWN)

FIGURE B
(TTP96K5BPNO SHOWN)

DIMENSIONS ARE FOR REFERENCE ONLY Inch (mm)

* Please visit the product pages on our website for the most up-to-date product information

# EZ NORM PATCHBAY SERIES

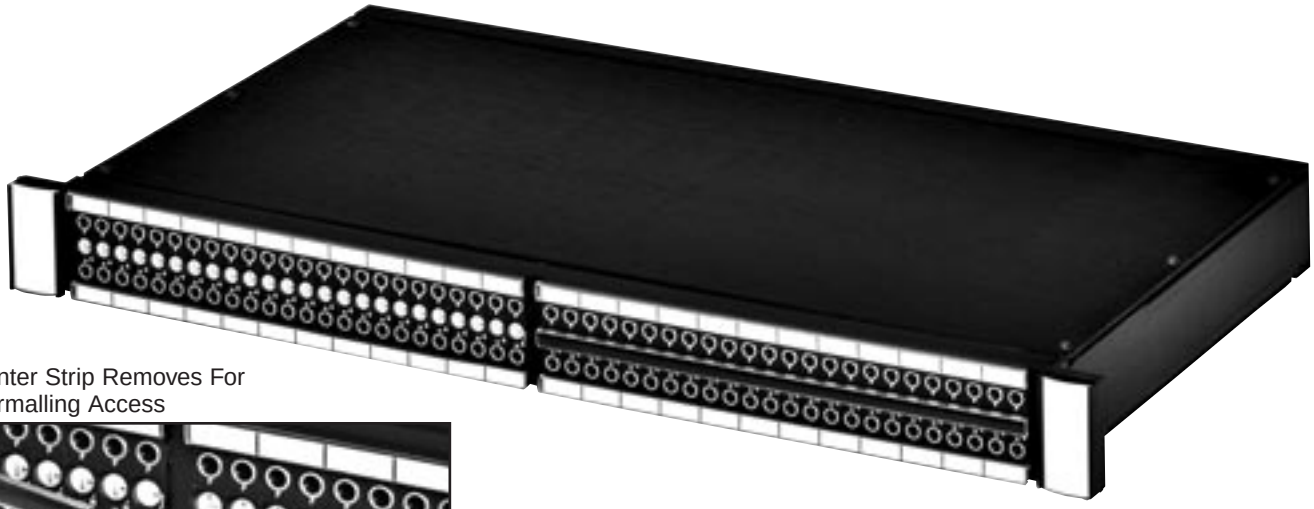

Center Strip Removes For Normalling Access

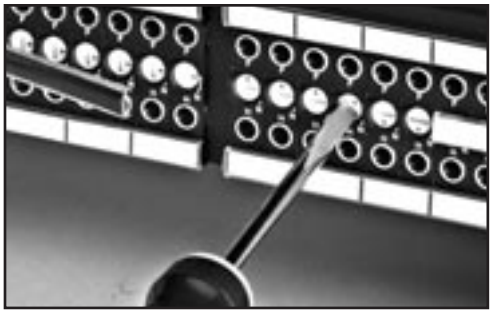

Easily Normal The Jacks By Rotating To "Full", "Non", Or "Half" Positions

The EZ Norm offers a simplified method for setting up and changing normals to a Bantam/TT patchbay. Simply remove the middle designation strip, and rotate the center cam, using a standard screwdriver. An audible"click" can be heard as you rotate from full normals to no normals to half normals. An opaque marking strip is included to conceal the normal position, if needed.

## EZ NORM JACK SPECIFICATIONS

**MATERIALS:**
**Housing & Cover:** 94V-0 rated thermoplastic
**Sleeve Collar:** Nickel plated copper alloy
**Tip, Ring, Shunt, & Sleeve Springs:** Nickel Silver with welded contacts
**Welded Contacts:** Gold
**Cam Switching Springs:** Silver plated copper alloy
**Cam Switching Contacts:** Silver plated copper alloy

**MECHANICAL**
**Jack Mechanical Life:** 30,000 cycles
**Cam Contact Mechanical Life:** 30,000 cycles
**Insertion - Withdrawal Forces:** 1 - 4 lbs.
**Moisture resistance:** MIL-STD 202 Method 106
**Thermal shock:** MIL-STD 202 Method 107
**Salt spray: MIL-STD Method 101 (48 hrs.)**
**Vibration: MIL-STD 202 Method 213**

**ELECTRICAL:**
**Jack Spring Contact Resistance:** 30 milliohm Maximum
**Cam Switch Contact Resistance:** 30 milliohm Maximum
**Insulation Resistance:** 10,000 Megaohms
**Dielectric Withstanding Voltage:**
500 VAC (rms) at 60 Hz
**Insertion Loss:** -0.5dB up to 10 MHz

## EZ NORM PATCHBAY OPTIONS

- 1RU can be terminated to EDAC or Cannon DL, solder terminals, or wire-wrap terminals
- 1.5RU can be terminated to EDAC/Cannon DL, solder terminals, wire-wrap terminals, plus 3 pin connectors, or our own PPT Professional Punchdown Terminal
- 2RU Same as above
- All units will be offered with or w/o docking connector
- Unwired units will be offered with either cable tie bar or cable tray

DIMENSIONS ARE FOR REFERENCE ONLY Inch (mm)


® Registered trademark of Switchcraft, Inc.
Note: Contact your Switchcraft Representative for price and delivery

* Please visit the product pages on our website for the most up-to-date product information

# EZ NORM PATCHBAY SERIES (continued)

## Racks

The EZ Norm comes in 3 different rack heights, 1RU, 1.5RU, and 2 RU.

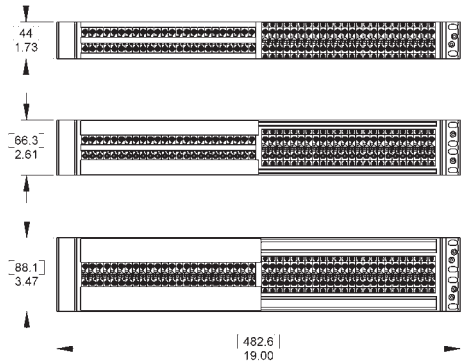


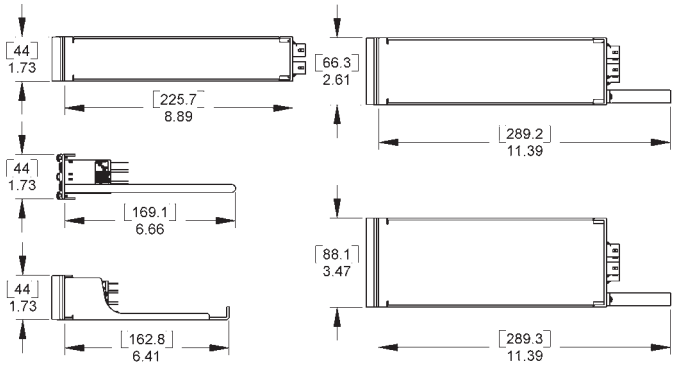


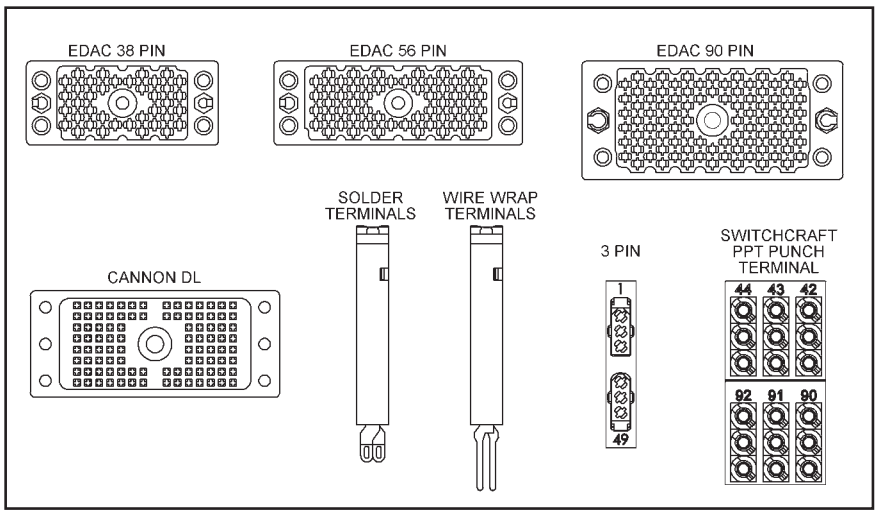


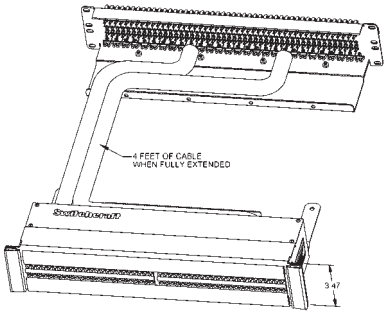


## Harness Assembly

The EZ Norm is also offered as a harness assembly, with a standard harness of 4 ft. Custom lengths are available, call Switchcraft® for details.

| | | | | | | | | | | |
|---|---|---|---|---|---|---|---|---|---|---|
| TT | TT SIZE JACKS | EZN | EZ-NORM CAM JACKS | _ H | REGULAR UNIT HARNESS UNIT (UMBILICAL) | 10 15 20 | 1 RACK UNIT HEIGHT 1.5 RACK UNIT HEIGHT 2 RACK UNIT HEIGHT | _ P | UNWIRED PRE WIRED | _ D | NO DOCKING DOCKING CONNECTOR |
| E90 | EDAC/ELCO 90 PIN CONNECTOR | E56 | EDAC/ELCO 56 PIN CONNECTOR | E38 | EDAC/ELCO 38 PIN CONNECTOR | IDC | IDC PPT TERMINALS | 3PIN | 3 PIN CONNECTORS | WW | WIRE WRAP PINS |
| SL | SOLDER LUGS | CDL | CANNON DL 96 PIN CONNECTORS | FA | FRONT ACCESS WITH PPT | _ T | NO REAR SUPPORT | B | CABLE TRAY / CABLE BAR | | |

UNWIRED ONLY

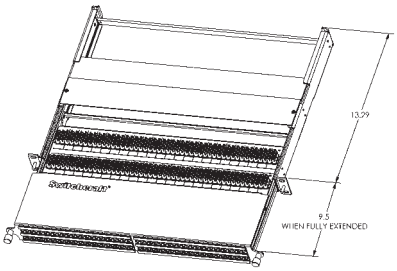


## Front Access

The Front Access option offers a slide-out tray, allowing the end user to re-terminate the patchbay from the front of the rack.

DIMENSIONS ARE FOR REFERENCE ONLY Inch (mm)

* Please visit the product pages on our website for the most up-to-date product information

# TT96 EDAC SERIES

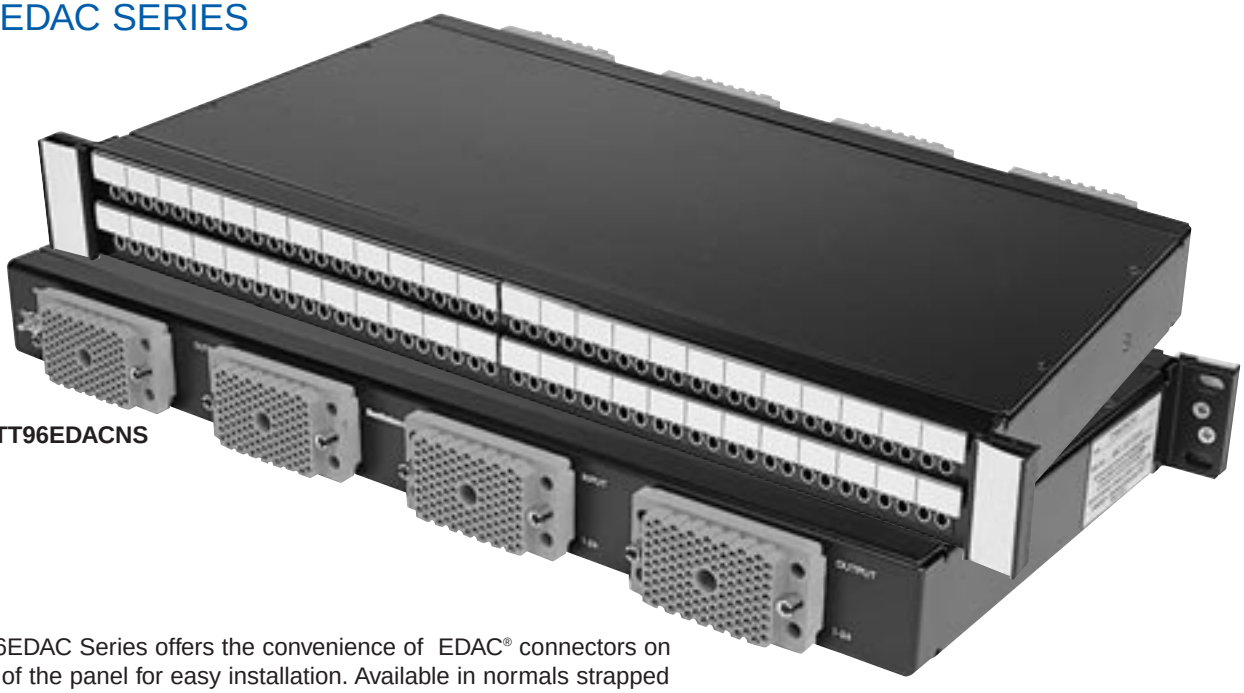

TT96EDACNS

The TT96EDAC Series offers the convenience of EDAC® connectors on the back of the panel for easy installation. Available in normals strapped and normals brought out, both wired to the SAC code of wiring. We also offer custom wiring configurations. Contact the factory for details.

## FEATURES AND BENEFITS

- Attractive, corrosion-resistant, nickel-plated jacks
- Steel frame jacks for superior jack life
- Extra wide labeling strips provide maximum space and two vertical strips, one at each side
- Rugged, attractive black anodized aluminum face will not break
- Two configurations available:
- Normals brought out
- Normalled at jacks
- Gold switching contacts for long-term reliability
- Jacks paired for easy identification of left and right channels
- Connectorized by EDAC® connectors for ease of termination by customer

## SPECIFICATIONS

### MATERIALS

### JACKS

**Frame:** Nickel-plated steel
**Bushing:** Nickel-plated brass
**Tip, Ring and Shunt Springs:** Nickel silver with welded contacts
**Assembly Screws:** Zinc-plated steel
**Welded Contacts:** Gold alloy

### PANEL

**Front Channel:** Black anodized aluminum
**Frame & Cover:** C.R.S. black epoxy painted
**Designation Strips:** Black polycarbonate 94V-0
**Designation Strip Covers:** Clear polycarbonate
**Jack Inserts:** Polyester

## EDAC CONNECTOR

**Housing:** Thermoplastic, UL94V-0
**Contacts:** Gold plated phosphor bronze

## MECHANICAL

**Life:** 30,000 cycles
**Insertion Force:** 7 lbs. maximum
**Withdrawal Force:** 1 lb. minimum
**Operating:** -20°C to +65°C

## ELECTRICAL

**Contact Resistance:** 30 milliohms maximum initial
**Insulation Resistance:**10,000 megohms
**Dielectric Withstanding Voltage:** 500VAC at 60 Hz
**Working Voltage:** 140VDC
**Current Rating:** 100 milliamps

**EDAC Mating Plugs**

| Part Number | Description |
|---|---|
| 516-090-000-301 | 90 Pin male w/screw |
| 516-090-000-302 | 90 Pin male w/nut |
| 516-120-000-101 | 120 Pin male w/screw |
| 516-120-000-102 | 120 Pin male w/nut |
| 516-290-500 | Terminal solder-style |
| 516-290-590 | Terminal crimp-style |

**Ordering Information**

| Part Number | Type of Jack | No. of Jacks | Description |
|---|---|---|---|
| TT96EDACNO | TT | 96 | Normals Brought Out (120 pin EDAC) |
| TT96EDACNS | TT | 96 | Normals Strapped (90 pin EDAC) |

DIMENSIONS ARE FOR REFERENCE ONLY Inch (mm)


® Registered trademark of Switchcraft, Inc.
Note: Contact your Switchcraft Representative for price and delivery

* Please visit the product pages on our website for the most up-to-date product information

## TT96 EDAC SERIES (continued)

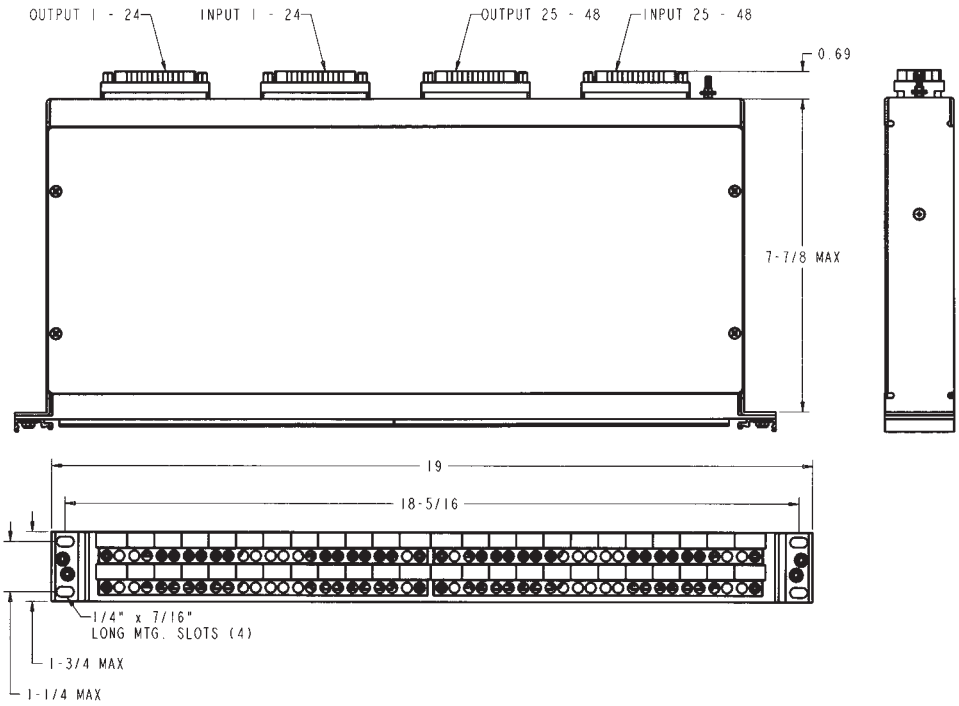


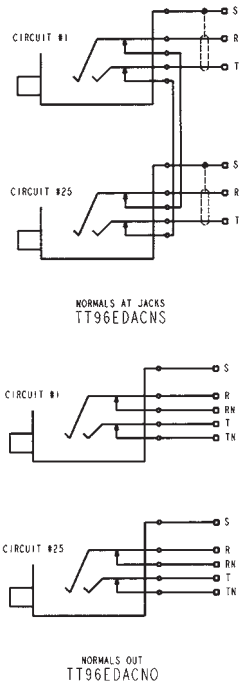


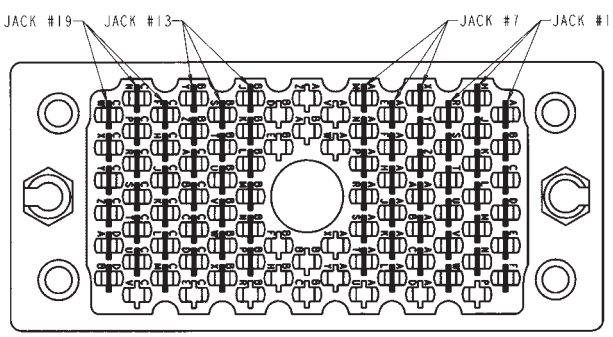


Standard Audio Configuration Wiring (S.A.C.)
90 Pin Plug Connector
(Normals at jacks)

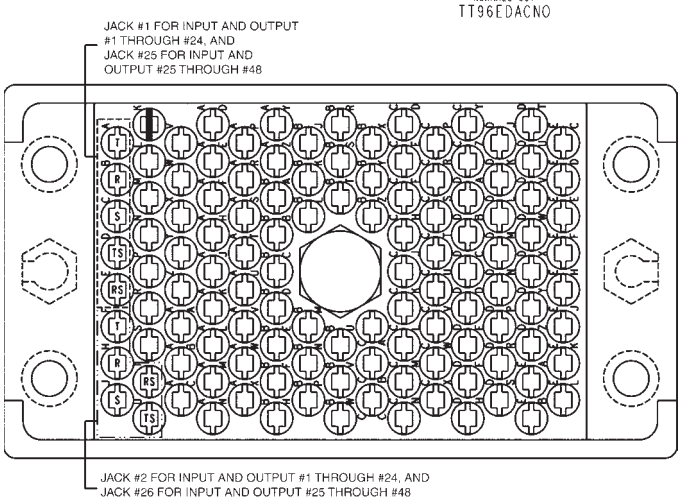


Standard Audio Configuration Wiring (S.A.C.)
120 Pin Plug Connector
(Normals brought out)

| 90 PIN CONNECTOR PIN-OUT | | | |
|---|---|---|---|
| JACK No. | TIP | RING | SLEEVE |
| 1 | A | H | R |
| JACKS #2 THRU #6 PATTERN CONTINUES TO F,N,W | | | |
| 7 | X | AE | AM |
| JACKS #8 THRU #12 PATTERN CONTINUES TO AC,AL,AT | | | |
| 13 | BJ | BS | BY |
| JACKS #14 THRU #18 PATTERN CONTINUES TO BP,BX,CD | | | |
| 19 | CF | CN | CW |
| JACKS #20 THRU #24 PATTERN CONTINUES TO CM,CU,DB | | | |

| 120 PIN CONNECTOR PIN-OUT | | | | | |
|---|---|---|---|---|---|
| JACK No. | TIP | RING | SLEEVE | TIP SHUNT | RING SHUNT |
| 1 | A | B | C | D | E |
| JACKS #2 THRU #6 PATTERN CONTINUES TO AN, AM, AL, AK, AJ | | | | | |
| 7 | AH | AF | AE | AD | AP |
| JACKS #8 THRU #12 PATTERN CONTINUES TO BN, BP, BW, BV, BU | | | | | |
| 13 | BT | BS | BR | BX | BY |
| JACKS #14 THRU #18 PATTERN CONTINUES TO CX, DH, DF, DE, DD | | | | | |
| 19 | DC | DB | DA | CZ | CY |
| JACKS #20 THRU #24 PATTERN CONTINUES TO EF, EH, EJ, EK, EL | | | | | |

DIMENSIONS ARE FOR REFERENCE ONLY Inch (mm)

* Please visit the product pages on our website for the most up-to-date product information

# TTP96K PATCHKIT SERIES

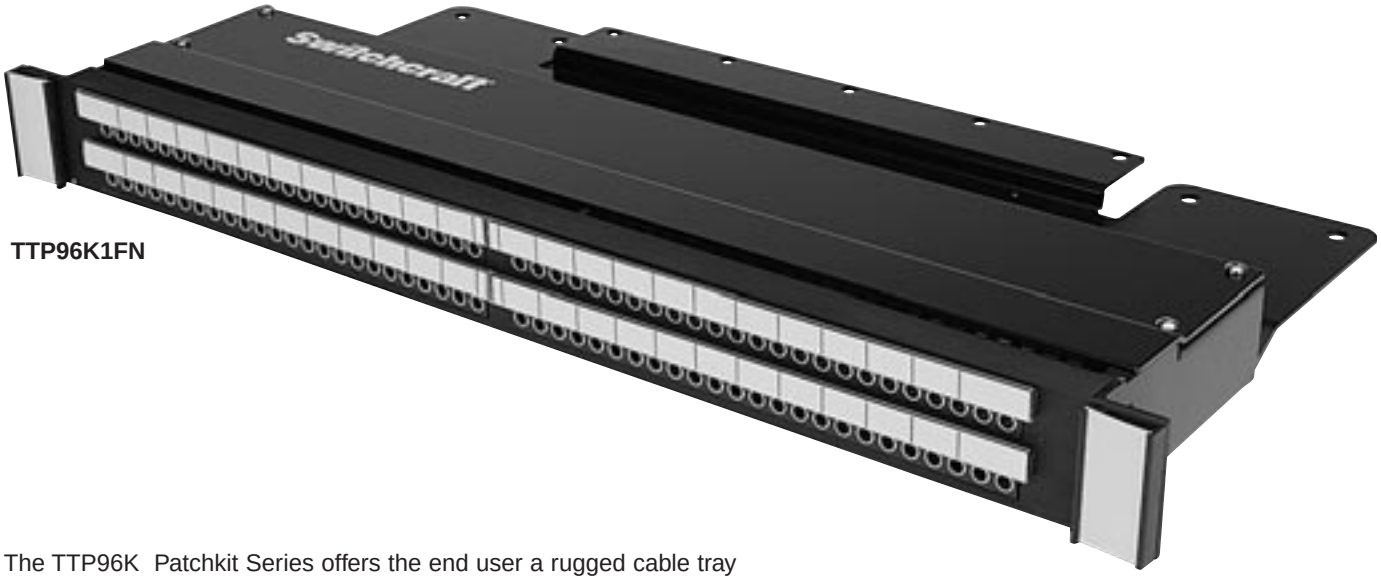


TTP96K1FN

The TTP96K Patchkit Series offers the end user a rugged cable tray to support rear cabling. Heavy duty construction takes weight off the back of the jacks for increased reliability. Available in 1.75" or 3.5" height versions.

## FEATURES AND BENEFITS

- Kit features 96 TT jacks in one rack space (1.75" high) or two rack spaces (3.5" high)
- Jack blocks can be removed from the front for easy soldering
- Dust tray limits dirt, dust and contamination of jack terminals
- Wire management straps are adjustable and reusable
- Attractive, corrosion resistant nickel-plated jacks
- Steel frame jack for superior jack life
- Extra wide labeling strips provide maximum space
- Rugged, attractive black anodized aluminum face will not break or rust
- Three jack configurations available for the exact switching arrangement you need: full normal, half normal, and non-normal (open circuit)
- Fanned solder terminals for easier solder connections
- Gold switching contacts for long-term reliability in normal-through connections

## SPECIFICATIONS

### MATERIALS

### JACKS

**Frame:** Nickel-plated steel
**Bushing:** Nickel-plated brass
**Tip, Ring and Shunt Springs:** Nickel silver with welded contacts
**Assembly Screws:** Nickel-plated steel
**Welded Contacts:** Gold alloy

## PANEL

**Front Channel:** Black anodized aluminum
**Frame:** C.R.S. black epoxy painted
**Designation Strips:** Black polycarbonate 94V-0
**Designation Strip Covers:** Clear polycarbonate
**Jack Inserts:** Thermoplastic polyester

## MECHANICAL

**Life:** 30,000 cycles
**Insertion Force:** 7 lbs. maximum
**Withdrawal Force:** 1 lb. minimum
**Environmental:** 0°C to +50°C

## ELECTRICAL

**Contact Resistance:** 30 milliohms maximum initial
**Insulation Resistance:** 10,000 megohms maximum
**Dielectric Withstanding Voltage:** 500VAC at 60 Hz
**Working Voltage:** 140VDC maximum
**Current Rating:** 100 milliamps

**Ordering Information**

| Part Number | Type of Jack | No. of Jacks | Description |
|---|---|---|---|
| TTP96K1FN | TT | 96 | 1.75" High, full normals |
| TTP96K1HN | TT | 96 | 1.75" High, half normal |
| TTP96K1NN | TT | 96 | 1.75" High, no normals |
| TTP96K3FN | TT | 96 | 3.5" High, full normals |
| TTP96K3HN | TT | 96 | 3.5" High, half normals |
| TTP96K3NN | TT | 96 | 3.5" High, no normals |

DIMENSIONS ARE FOR REFERENCE ONLY Inch (mm)


® Registered trademark of Switchcraft, Inc.
Note: Contact your Switchcraft Representative for price and delivery

* Please visit the product pages on our website for the most up-to-date product information

## TTP96K PATCHKIT SERIES (continued)

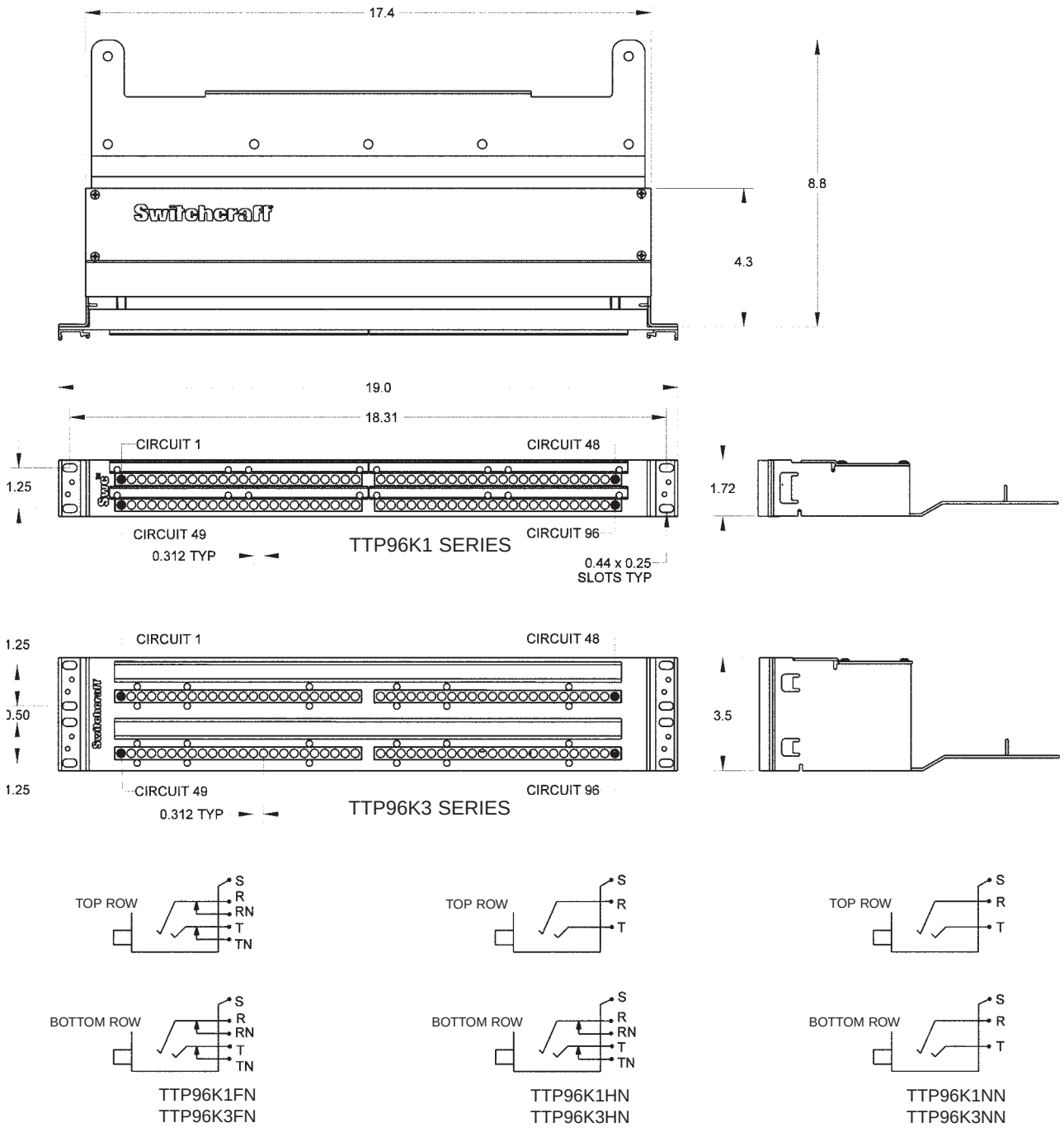


DIMENSIONS ARE FOR REFERENCE ONLY Inch (mm)

* Please visit the product pages on our website for the most up-to-date product information

# MT48K/MT52K PATCHKIT SERIES

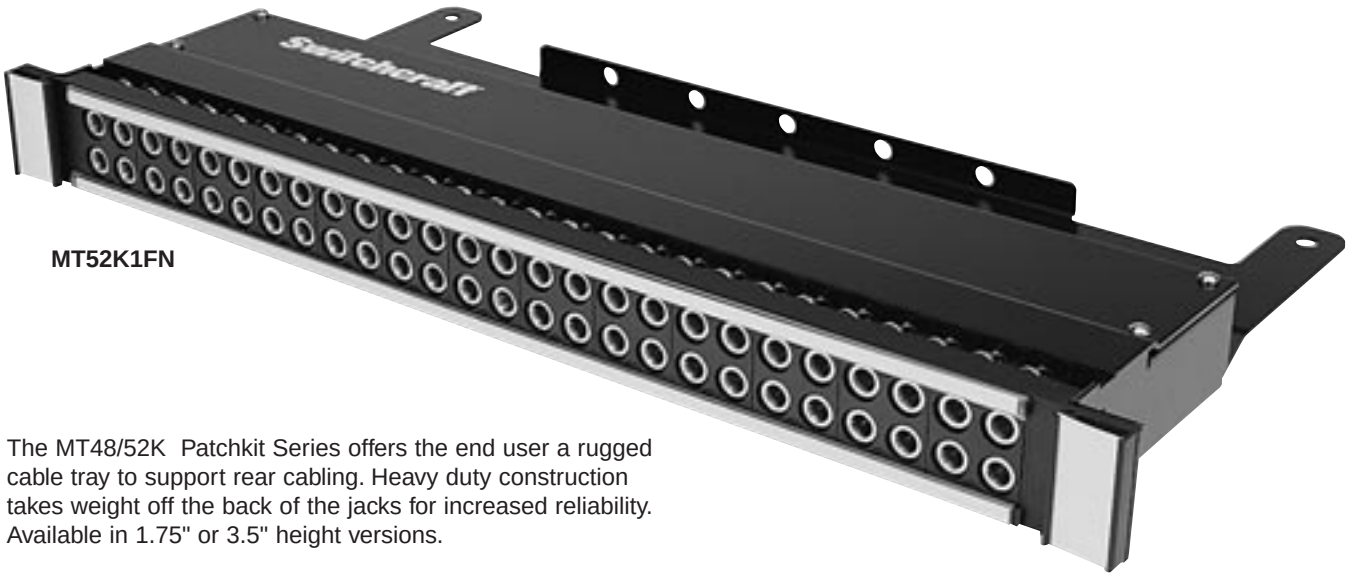


MT52K1FN

The MT48/52K Patchkit Series offers the end user a rugged cable tray to support rear cabling. Heavy duty construction takes weight off the back of the jacks for increased reliability. Available in 1.75" or 3.5" height versions.

## FEATURES AND BENEFITS

- Kit features 48 1/4" longframe jacks in one rack space (1.75" high) or in two rack spaces (3.5" high) or 52 1/4" longframe jacks in one rack space (1.75" high)
- Allows user to add cable and termination panel
- Removable jack panel from the front allows easy soldering of wire connections
- Jacks have gold switching contacts
- Fanned solder terminals for easier soldering
- Offset ground lugs allow easy bussing of ground with one wire
- Jacks have a nickel-plated frame and assembly screws
- Wire management straps are reusable and adjustable

## SPECIFICATIONS

### MATERIALS

### JACKS

**Frame:** Stamped nickel-plated steel
**Bushing:** Nickel-plated brass
**Tip, Ring and Shunt Springs:** Nickel silver with welded contacts
**Assembly Screws:** Nickel-plated steel
**Welded Contacts:** Gold alloy

### PANEL

**Front Panel:** Thermoplastic
**Frame:** C.R.S. black epoxy paint
**Designation Strips:** Black polycarbonate 94V-0
**Designation Strip Covers:** Clear polycarbonate

## MECHANICAL

**Life:** 30,000 cycles
**Insertion Force:** 7 lbs. maximum
**Withdrawal Force:** 1 lb. minimum
**Operating:** 0°C to +50°C

## ELECTRICAL

**Contact Resistance:** 30 milliohms maximum initial
**Insulation Resistance:** 10,000 megohms maximum
**Dielectric Withstanding Voltage:** 500VAC at 60 Hz
**Working Voltage:** 140VDC maximum
**Current Rating:** 100 milliamps

**Ordering Information**

| Part Number | Type of Jack | No. of Jacks | Height | Description |
|---|---|---|---|---|
| MT48K1NS | MT | 48 | 1.75" | Normals strapped |
| MT48K1FN | MT | 48 | 1.75" | Full normals |
| MT48K1HN | MT | 48 | 1.75" | Half normals |
| MT48K1NN | MT | 48 | 1.75" | No normals |
| MT52K1NS | MT | 52 | 1.75" | Normals strapped |
| MT52K1FN | MT | 52 | 1.75" | Full normals |
| MT52K1HN | MT | 52 | 1.75" | Half normals |
| MT52K1NN | MT | 52 | 1.75" | No normals |
| MT48K3FN | MT | 48 | 3.5" | Full normals |
| MT48K3HN | MT | 48 | 3.5" | Half normals |
| MT48K3NN | MT | 48 | 3.5" | No normals |
| MT52K3FN | MT | 52 | 3.5" | Full normals |
| MT52K3HN | MT | 52 | 3.5" | Half normals |
| MT52K3NN | MT | 52 | 3.5" | No normals |

DIMENSIONS ARE FOR REFERENCE ONLY Inch (mm)


® Registered trademark of Switchcraft, Inc.
Note: Contact your Switchcraft Representative for price and delivery

* Please visit the product pages on our website for the most up-to-date product information

## MT48K/MT52K PATCHKIT SERIES (continued)

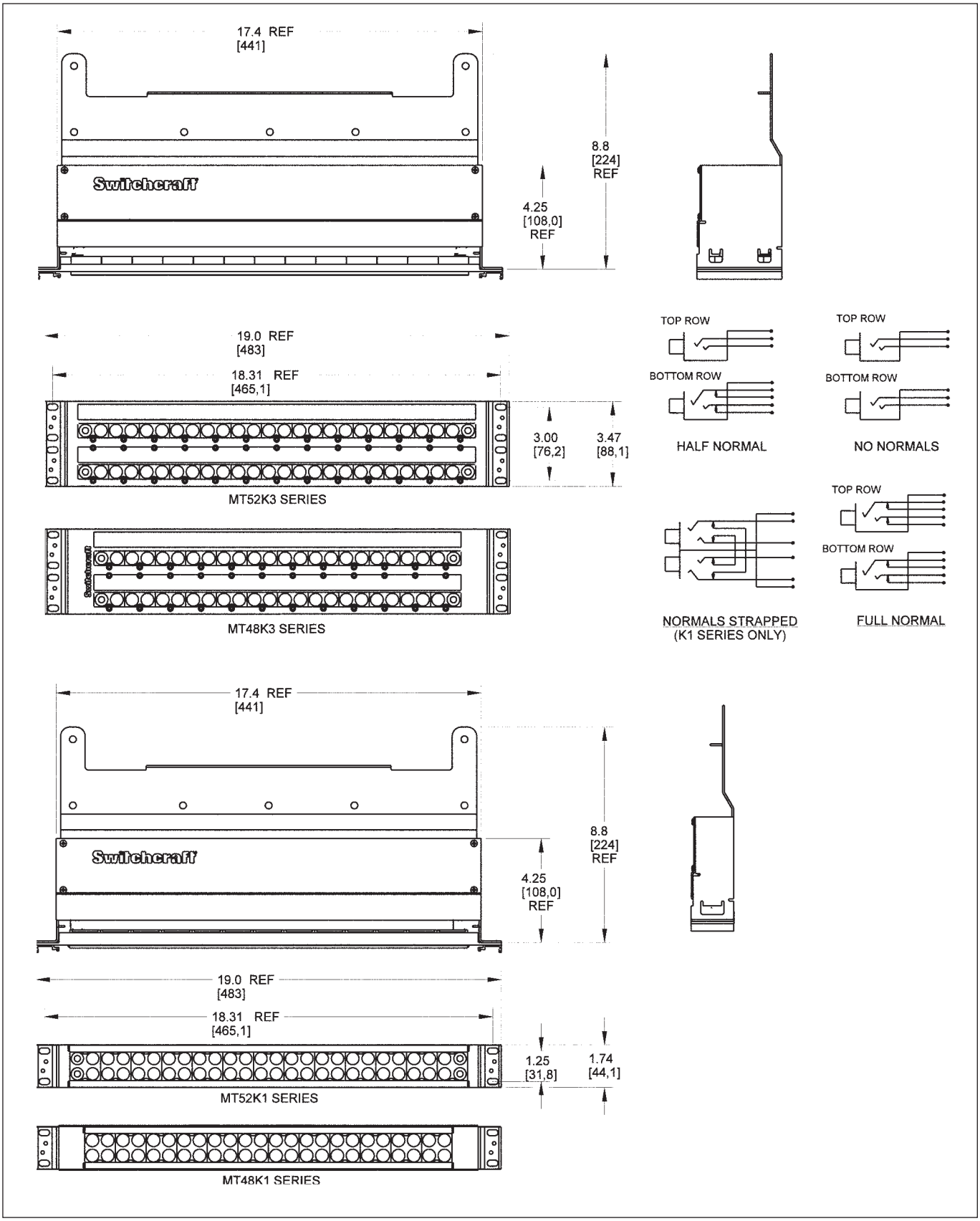


DIMENSIONS ARE FOR REFERENCE ONLY Inch (mm)

* Please visit the product pages on our website for the most up-to-date product information

# MT48/MT52 PATCHBAY SERIES

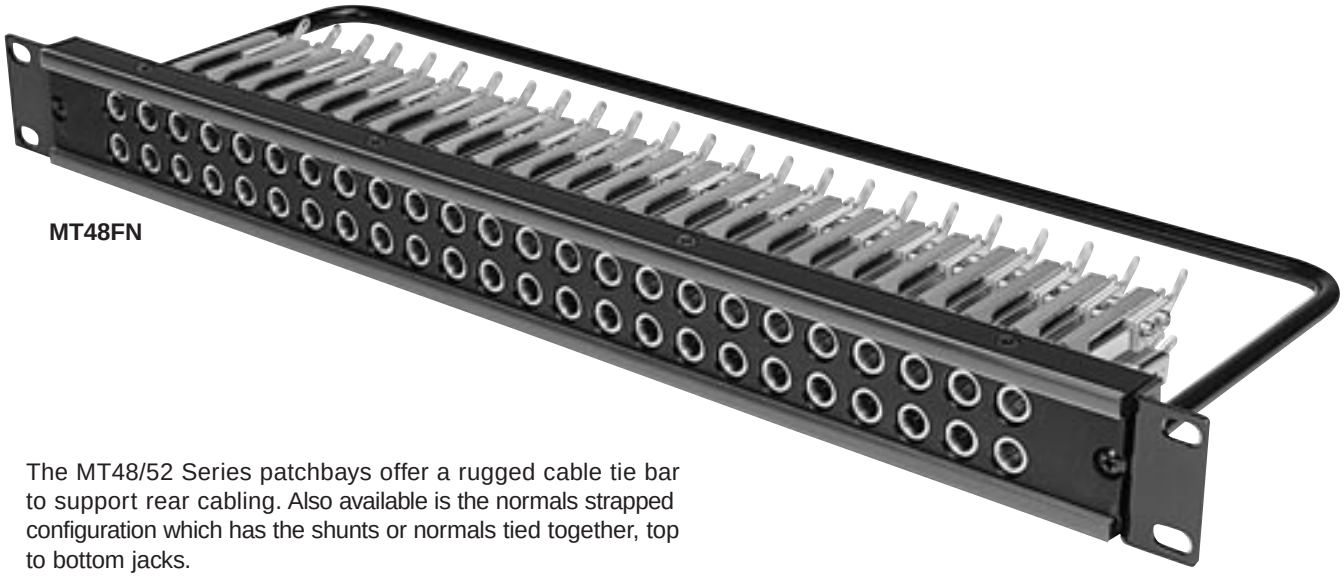

MT48FN

The MT48/52 Series patchbays offer a rugged cable tie bar to support rear cabling. Also available is the normals strapped configuration which has the shunts or normals tied together, top to bottom jacks.

## FEATURES AND BENEFITS

- Units feature either 48 or 52 MT Jax®
- Steel frame jacks for superior jack life
- Attractive, corrosion resistant nickel-plated jacks
- Gold switching contacts for long-term reliability in normal-through connections
- Offset ground terminal for ease in making common ground buss connections
- Fanned solder terminals for easier solder connections
- Cable tie bar takes the weight of cables off the jacks
- Four jack configurations available for the exact switching arrangement: full normal, half normal, non-normal, and normals strapped

## SPECIFICATIONS

## MATERIALS

### JACKS

**Frame:** Steel, nickel-plated
**Bushing:** Brass, nickel-plated
**Springs:** Nickel silver, solder lugs
**Ground Terminal:** Nickel silver, solder lugs
**Switching Contacts:** Welded, gold alloy
**Insulation:** Phenolic spacers, rigid PVC tubing through stack
**Screws:** Steel, nickel-plated

### PANEL

**Jack Panel**: Thermoplastic
**Cable Support Bracket:** 5/16" diameter black epoxy painted steel rod
**Screws (designation strip):** Steel, black zinc-plated
**Screws (mounting jack):** Steel, nickel plated
**Kwik-change® Designation Strip:** Extruded aluminum, black anodized
**Marking Strip:** White plastic, matte finish
**Marking Strip Cover:** Clear, extruded plastic

### MECHANICAL

**Life:** 30,000 cycles
**Insertion Force:** 7 lbs. maximum
**Withdrawal Force:** 1 lb. minimum
**Operating:** 0˚C to +50˚C

### ELECTRICAL

**Contact Resistance:** 30 milliohms maximum initial
**Insulation Resistance:** 10,000 megohms maximum
**Dielectric Withstanding Voltage:** 500VAC at 60 Hz
**Working Voltage:** 140VDC maximum
**Current Rating:** 100 milliamps

**Ordering Information**

| Part Number | Type of Jack | No. of Jacks | Description |
|---|---|---|---|
| **MT48FN** | MT | 48 | Full normals |
| **MT48HN** | MT | 48 | Half normals |
| **MT48NN** | MT | 48 | No normals |
| **MT48NS** | MT | 48 | Normals strapped |
| **MT52FN** | MT | 52 | Full normals |
| **MT52HN** | MT | 52 | Half normals |
| **MT52NN** | MT | 52 | No normals |
| **MT52NS** | MT | 52 | Normals strapped |

DIMENSIONS ARE FOR REFERENCE ONLY Inch (mm)


® Registered trademark of Switchcraft, Inc.
Note: Contact your Switchcraft Representative for price and delivery

* Please visit the product pages on our website for the most up-to-date product information

## MT48/MT52 PATCHBAY SERIES (continued)

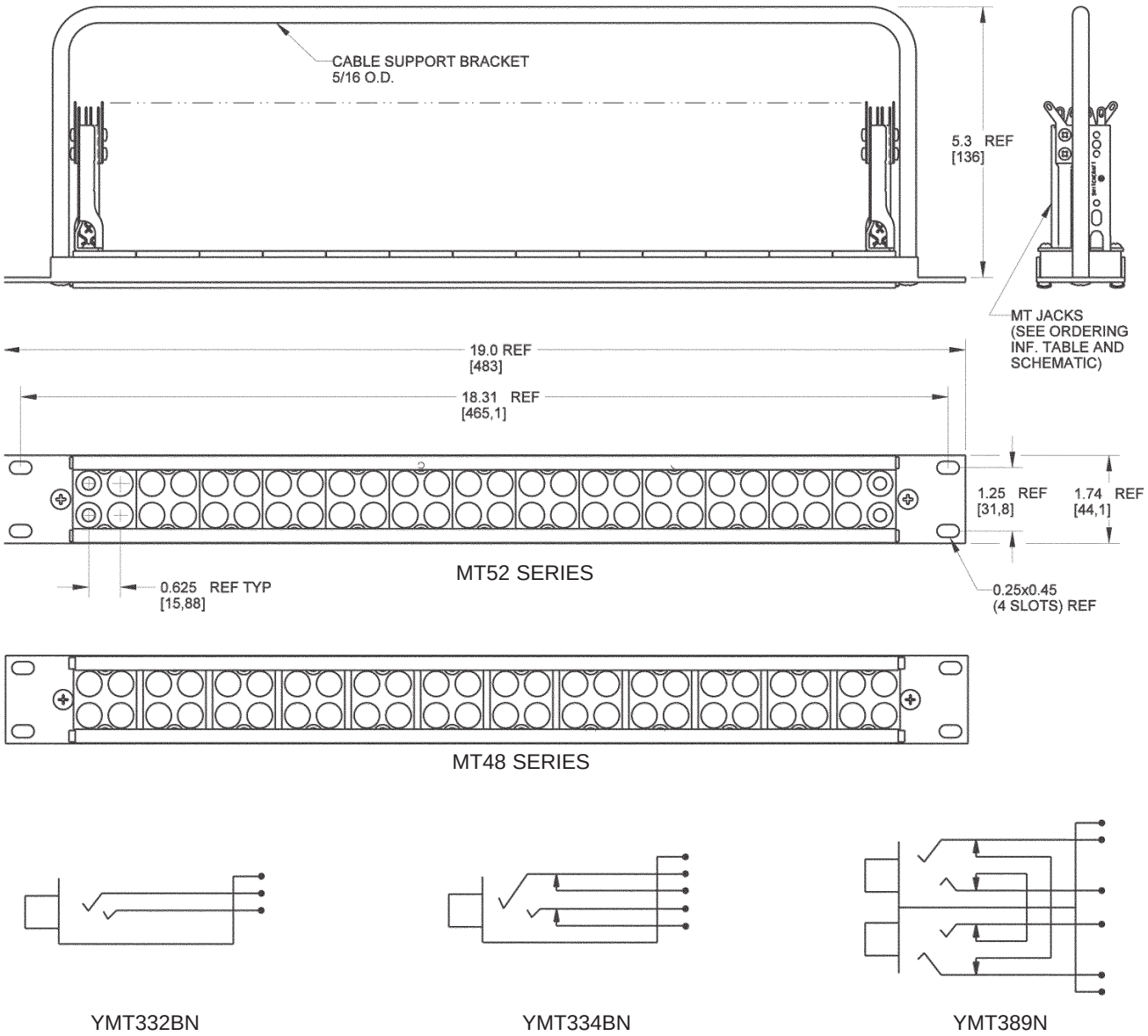





JACK SCHEMATICS
"N" SUFFIX DENOTES WELDED GOLD CONTACTS
AND NICKEL-PLATED FRAME

DIMENSIONS ARE FOR REFERENCE ONLY Inch (mm)

* Please visit the product pages on our website for the most up-to-date product information

# TTP96AS PATCHBAY SERIES

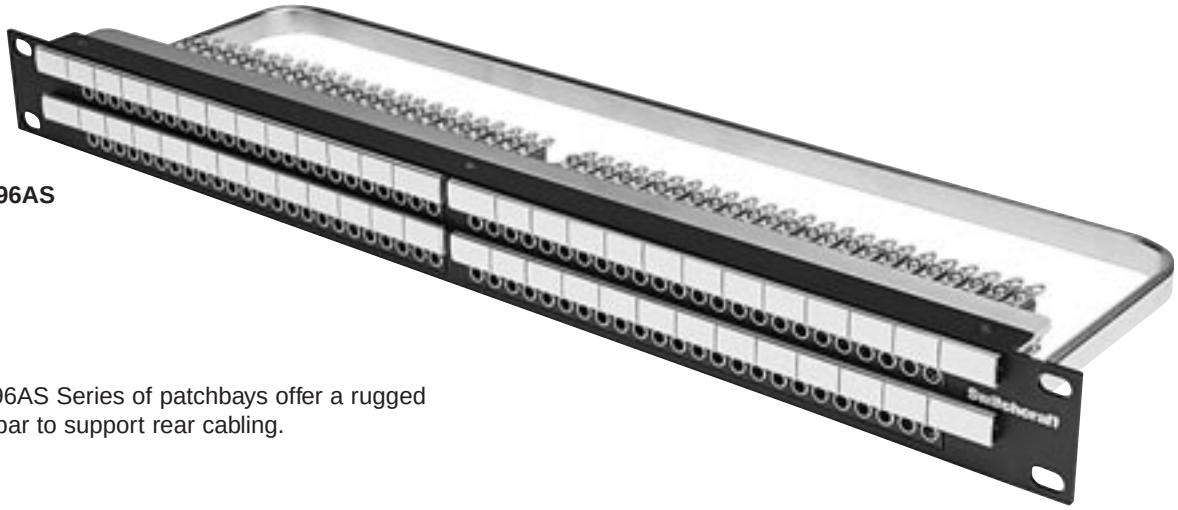

TTP96AS

The TTP96AS Series of patchbays offer a rugged cable tie bar to support rear cabling.

## FEATURES AND BENEFITS

- Unit features 96 TT jacks
- Attractive, corrosion resistant nickel-plated jacks
- Steel frame jack for superior jack life
- Extra wide labeling strips provide maximum space
- Rugged cable tie bar takes the weight of cables off the jacks
- Rugged, attractive black anodized aluminum face will not break
- Three jack configurations available for the exact switching arrangement you need: full normal, half normal, and open circuit panel
- Fanned solder terminals for easier solder connections
- Offset ground terminal for ease in making common ground buss connections
- Gold switching contacts for long-term reliability in normal-through connections

## SPECIFICATIONS

### MATERIALS

### JACKS

**Frame:** Steel, nickel-plated
**Bushing:** Nickel-plated copper alloy
**Springs:** Copper alloy solder lugs
**Ground Terminal:** Steel, tin electrodeposited
**Switching Contacts:** Welded, gold alloy inlay over palladium base
**Insulation:** Rigid plastic spacers, rigid PVC tubing through stack
**Screws:** Steel, plated

### PANEL

**Frame:** Black anodized aluminum
**Inserts:** Polyester, glass filled, 94V-0
**Cable Support Bar:** Cold rolled steel, nickel-plated
**Designation Strips:** Thermoplastic, 94V-0
**Designation Strip Covers:**
Clear thermoplastic, SE-1
**Marking Strip:** Rigid vinylite
**Jack Mounting Screws:** Steel, plated
**Screws:** Steel, black plated

### MECHANICAL

**Life:** 30,000 cycles
**Insertion Force:** 7 lbs. maximum
**Withdrawal Force:** 1 lbs. minimum
**Environmental:** 0°C to +50°C

### ELECTRICAL

**Contact Resistance:** 30 milliohms maximum initial
**Insulation Resistance:** 10,000 megohms maximum
**Dielectric Withstanding Voltage:** 500VAC at 60 Hz
**Working Voltage:** 140VDC maximum
**Current Rating:** 100 milliamps

**Ordering Information**

| Part Number | Type of Jack | No. of Jacks | Description |
|---|---|---|---|
| TTP96ASFN | TT | 96 | Full normals |
| TTP96ASHN | TT | 96 | Half normals |
| TTP96ASNN | TT | 96 | No normals |

DIMENSIONS ARE FOR REFERENCE ONLY Inch (mm)


® Registered trademark of Switchcraft, Inc.
Note: Contact your Switchcraft Representative for price and delivery

* Please visit the product pages on our website for the most up-to-date product information

## TTP96AS PATCHBAY SERIES (continued)

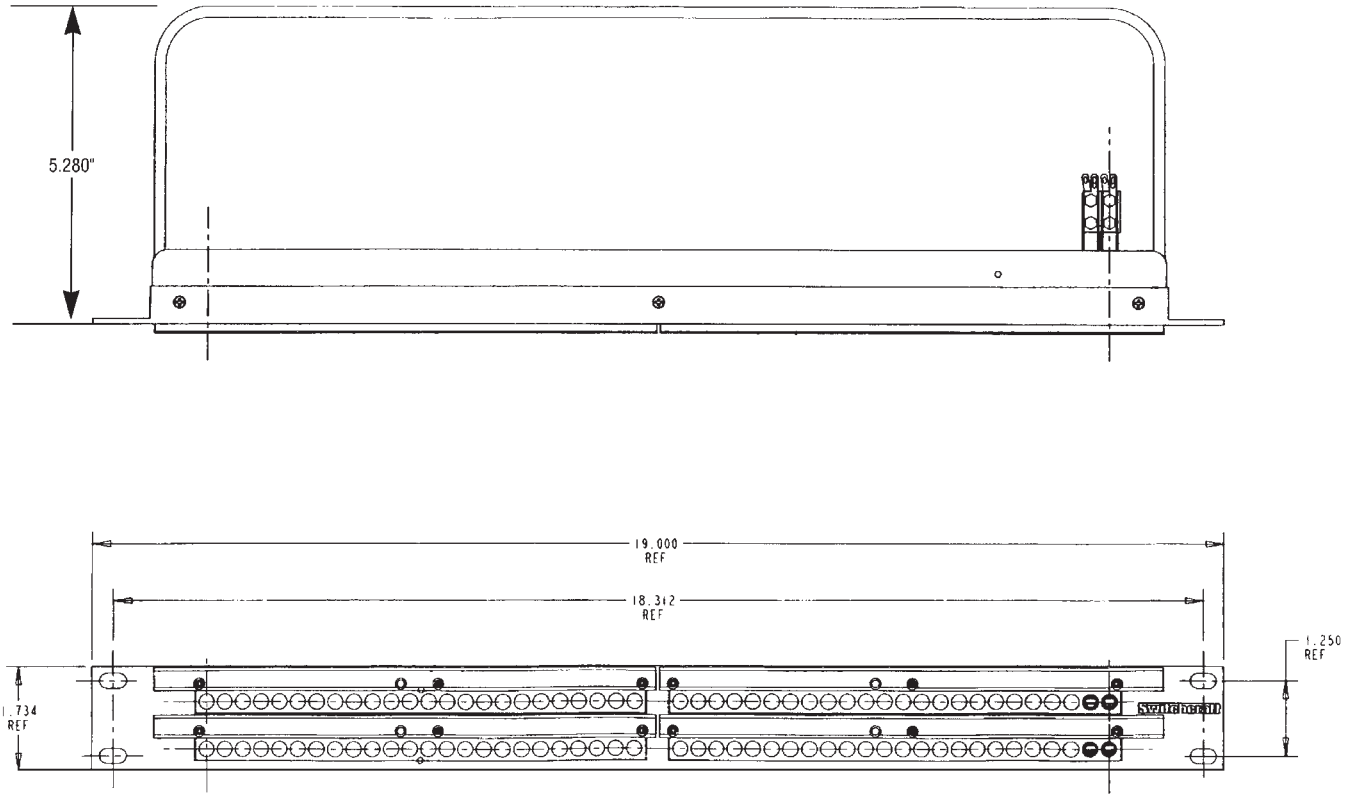


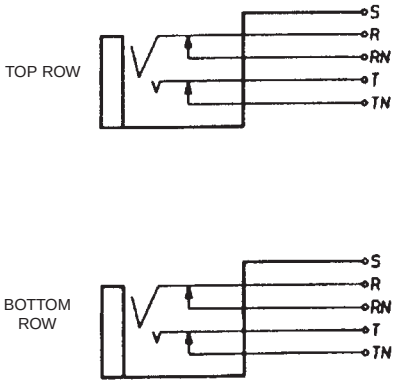


TTP96ASFN

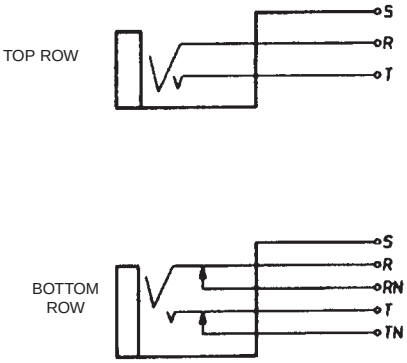


TTP96ASHN

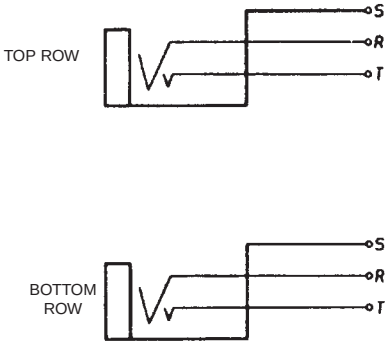


TTP96ASNN

DIMENSIONS ARE FOR REFERENCE ONLY Inch (mm)

* Please visit the product pages on our website for the most up-to-date product information

# Q-G® PATCHBAY SERIES

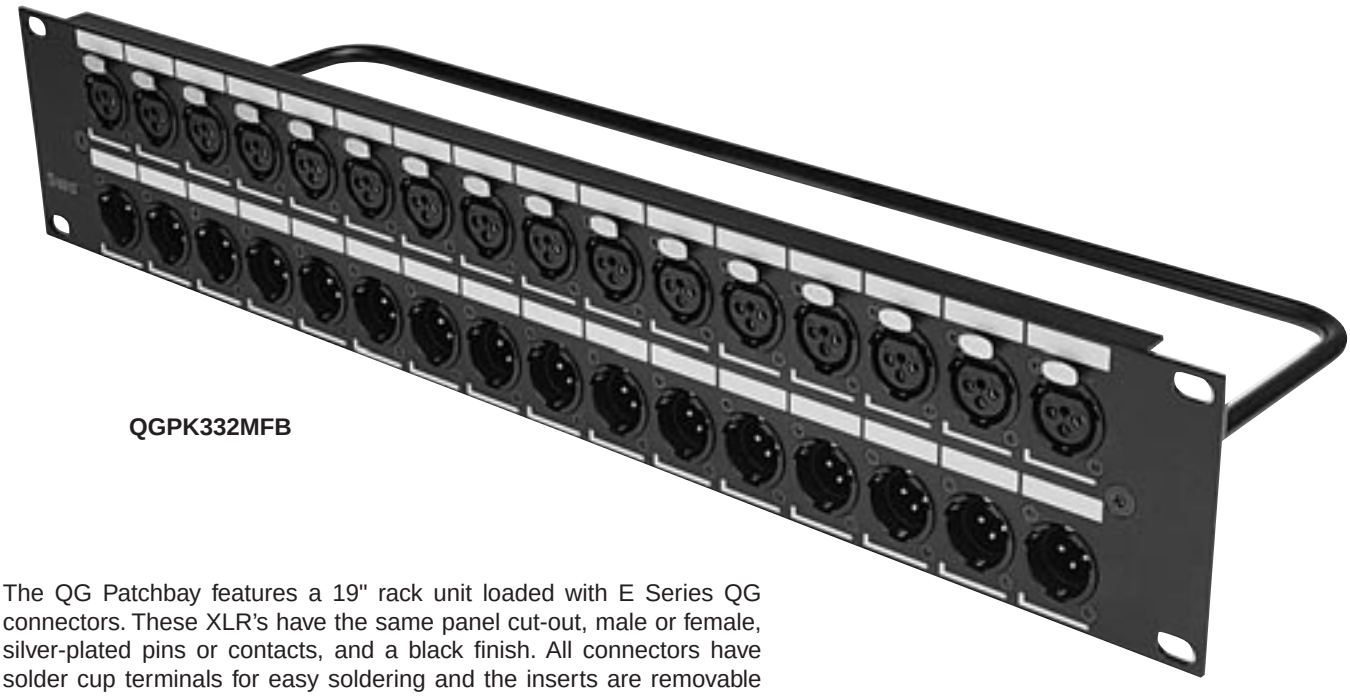

QGPK332MFB

The QG Patchbay features a 19" rack unit loaded with E Series QG connectors. These XLR's have the same panel cut-out, male or female, silver-plated pins or contacts, and a black finish. All connectors have solder cup terminals for easy soldering and the inserts are removable from the back, allowing for easy changes. The one rack unit height version comes with 16 male, or 16 female, or 8 male and 8 female connectors. The two rack unit version comes with 16 male and 16 female connectors. We also offer the unit without connectors, but with the panel cut-outs already punched out. All versions have a rugged cable tie bar, which takes the weight of the cabling away from the solder connections.

## FEATURES AND BENEFITS

- Available in 1RU or 2RU versions
- Available with or without the connectors
- E Series connectors are silver-plated, 3 pins/contacts with black finish
- Cable tie bar takes the weight of the cables off the solder terminations
- Rugged aluminum channel increases durability
- Silk-screen designation area makes it easy to re-label channels

## SPECIFICATIONS

## MATERIALS

## CONNECTORS

**Housing:** Die-cast, black velvet finish
**Inserts:** Glass-filled thermoplastic
**Pin/Contacts:** Copper alloy, silver-plated
**Latch Release:** Steel, nickel-plated
**Insert Locking Cam:** Die-cast zinc

## FRAME

Aluminum, black anodized

## CABLE TIE BAR

Steel, black epoxy

**Ordering Information**

| Part Number | Height | Description |
|---|---|---|
| QGPK116FB | 1.75" | 16 female |
| QGPK116MB | 1.75" | 16 male |
| QGPK18M8FB | 1.75" | 8 male, 8 female |
| QGPK332MFB | 3.5" | 16 female( top), 16 male (bottom) |
| QGPK1B | 1.75" | Blank panel |
| QGPK3B | 3.5" | Blank panel |

DIMENSIONS ARE FOR REFERENCE ONLY Inch (mm)


® Registered trademark of Switchcraft, Inc.
Note: Contact your Switchcraft Representative for price and delivery

* Please visit the product pages on our website for the most up-to-date product information

## Q-G® PATCHBAY SERIES (continued)

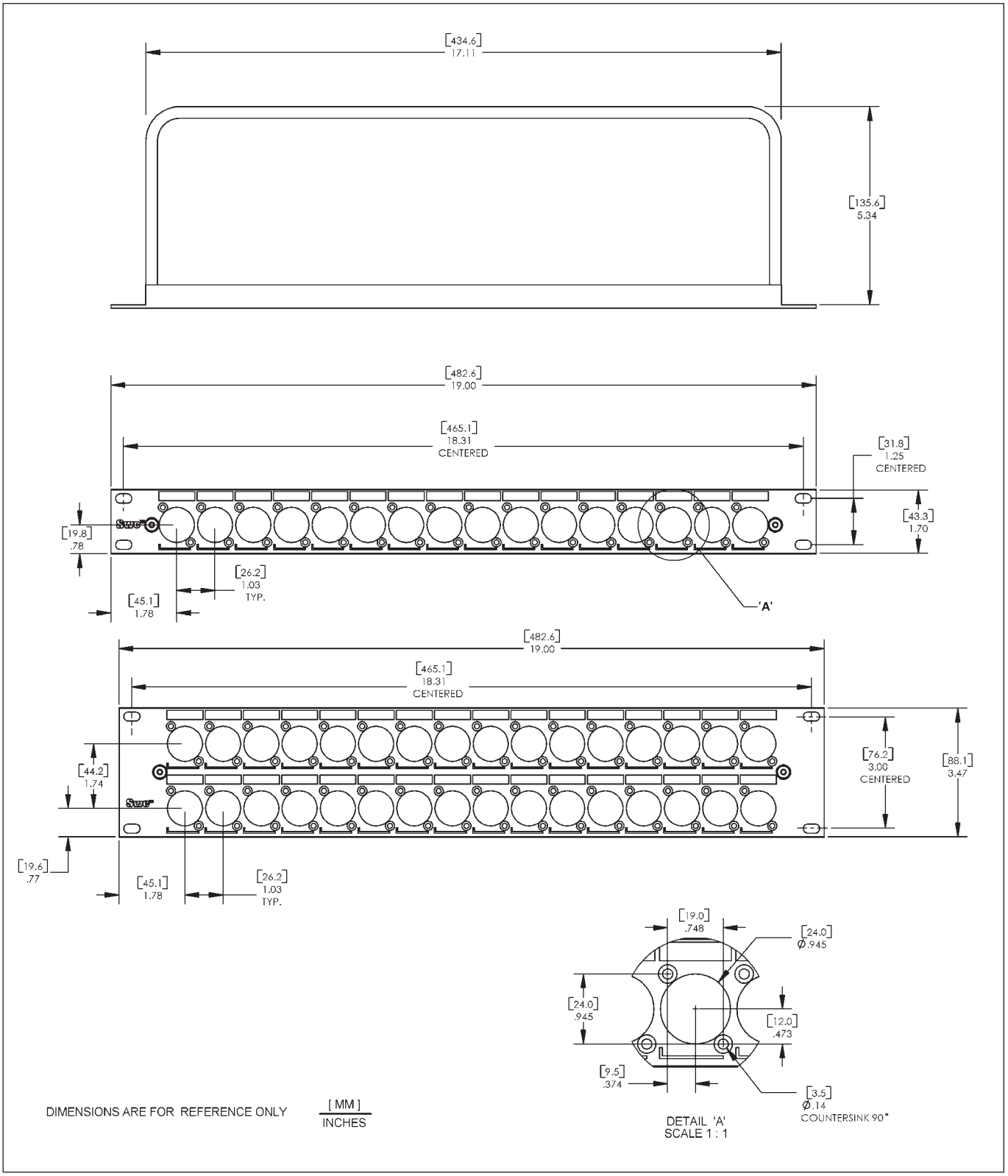


DIMENSIONS ARE FOR REFERENCE ONLY Inch (mm)

* Please visit the product pages on our website for the most up-to-date product information

# HPC PATCHBAY SERIES

The HPC Patchbay features a 19” rack unit loaded with HPC Series connectors. Available with either 0.250” Faston terminals or 0.187” Faston terminals. One rack unit height versions come with 12 HPC connectors, two rack unit height versions come with 24 HPC connectors. All versions have a rugged cable tie bar, which takes the weight of the cabling away from the connections.

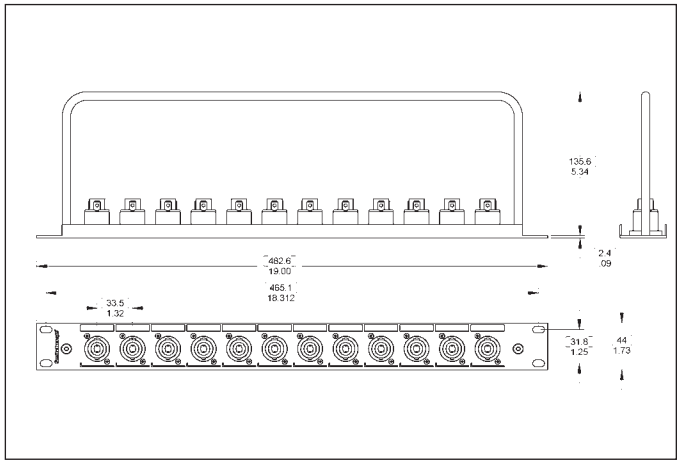


## FEATURES AND BENEFITS

- Available in 1RU or 2RU versions
- Available with or without connectors
- HPC Series connectors are compatible with Neutrik Speakon® connectors
- Cable tie bar takes weight of the cables off the terminations
- Rugged aluminum channel
- Silk-screen designation area makes it easy to re-label channels

## HP CONNECTOR SPECIFICATIONS

See page 38 for details

## MATERIALS

Housing: Thermoplastic UL 94V-O rated
Contacts: Silver-plated over copper alloy

FRAME
Aluminum, black anodized

CABLE TIE BAR
Steel, black epoxy

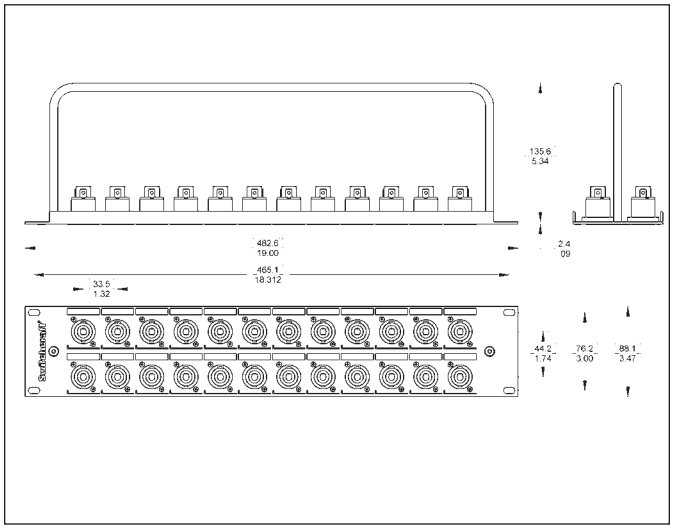


| Part Number | Height | Description |
|---|---|---|
| **HPCPK112F** | 1.75" | 12 connectors, 0.250" Fastons |
| **HPCPK112F1** | 1.75" | 12 connectors, 0.187" Fastons |
| **HPCPK1B** | 1.75" | Blank panel |
| **HPCPK324F** | 3.50" | 24 connectors, 0.250" Fastons |
| **HPCPK324F1** | 3.50" | 24 connectors, 0.187" Fastons |
| **HPCPK3B** | 3.50" | Blank panel |

DIMENSIONS ARE FOR REFERENCE ONLY Inch (mm)



® Registered trademark of Neutrik
Note: Contact your Switchcraft Representative for price and delivery

* Please visit the product pages on our website for the most up-to-date product information

# RS 422 DATA PATCHBAY SERIES

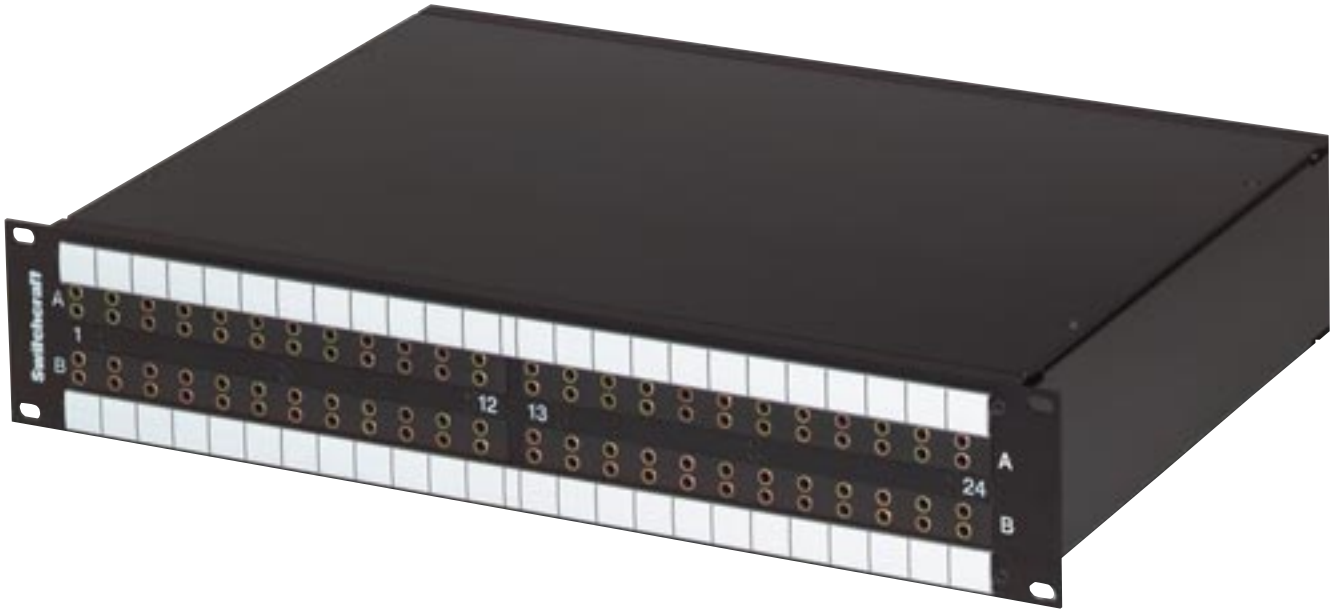


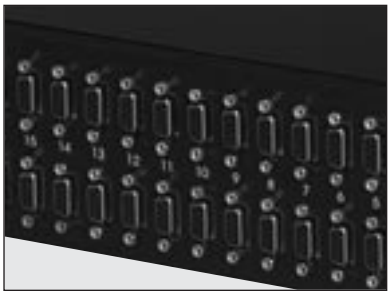

| RS422 Ordering Information | | | | |
|---|---|---|---|---|
| **Part Number*** | **No. of Jacks** | **Front Panel Layout** | **Back Plane** | **Rack Height** |
| **RS422H48N081** | 2 x 8 | Horizontal | 9 Pin D-Sub | 1 |
| **RS422V4N081** | 2 x 8 | Vertical | 9 Pin D-Sub | 1 |
| **RS422H4N161** | 2 x 16 | Horizontal | 9 Pin D-Sub | 1 |
| **RS422H4N162** | 2 x 16 | Horizontal | 9 Pin D-Sub | 2 |
| **RS422V4N161** | 2 x 16 | Vertical | 9 Pin D-Sub | 1 |
| **RS422V4N162** | 2 x 16 | Vertical | 9 Pin D-Sub | 2 |
| **RS422H4N242** | 2 x 24 | Horizontal | 9 Pin D-Sub | 2 |
| **RS422V4N242** | 2 x 24 | Vertical | 9 Pin D-Sub | 2 |
| **RS422V4N322** | 2 x 32 | Vertical | 9 Pin D-Sub | 2 |
| **RS422PH4N081** | 2 x 8 | Horizontal | PPT Punchdown | 1 |
| **RS422PV4N081** | 2 x 8 | Vertical | PPT Punchdown | 1 |
| **RS422PH4N161** | 2 x 16 | Horizontal | PPT Punchdown | 1 |
| **RS422PH4N162** | 2 x 16 | Horizontal | PPT Punchdown | 2 |
| **RS422PV4N161** | 2 x 16 | Vertical | PPT Punchdown | 1 |
| **RS422PV4N162** | 2 x 16 | Vertical | PPT Punchdown | 2 |
| **RS422PH4N242** | 2 x 24 | Horizontal | PPT Punchdown | 2 |
| **RS422PV4N242** | 2 x 24 | Vertical | PPT Punchdown | 2 |
| **RS422PV4N322** | 2 x 32 | Vertical | PPT Punchdown | 2 |

*Add "N" for non-normalled version
See Page 267 for Patchcord Information

## FEATURES AND BENEFITS

- Unit Features either 8,16, 24, or 32 TT style jacks on the front Panels, to a 9 pin D-Sub or PPT back Plane.
- All version utilize low capacitance internal wiring for maximum performance of transferring data
- All standard units are available 1 or 2 rack units high (1.5 RU available by request)
- Rugged, attractive black epoxyfinished steel frame chassis

Our standard RS data jackfield series offer a multiple combination of ports, rack heights, and back panel terminations which will easily fit into any television broadcast or video production where custom data patching is required. Custom ports and rack height combinations can be supplied. Contact the factory for details.

## SPECIFICATIONS

### ELECTRICAL

**Internal Wiring:**
24 AWG Solid TC, foils shield
**Nom Capacitance:** 11.5 pF/ft between conductors
21.3 pF/ft between one conductor and conductor connected to the shield
**Nom**. Impedance: 110 Ohms

DIMENSIONS ARE FOR REFERENCE ONLY Inch (mm)

* Please visit the product pages on our website for the most up-to-date product information

# RS 422 DATA PATCHBAY SERIES

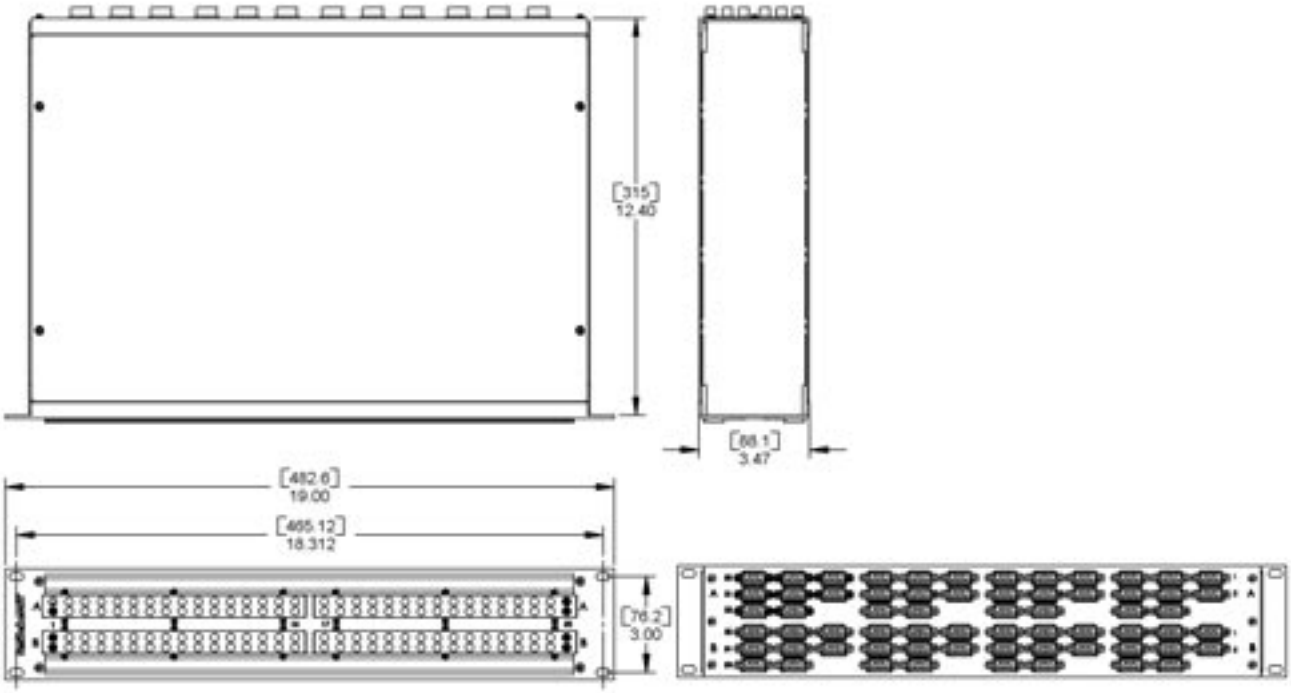


**RS422V4N322**
**32 Vertical Paired Jacks**
**Front and Back Views**

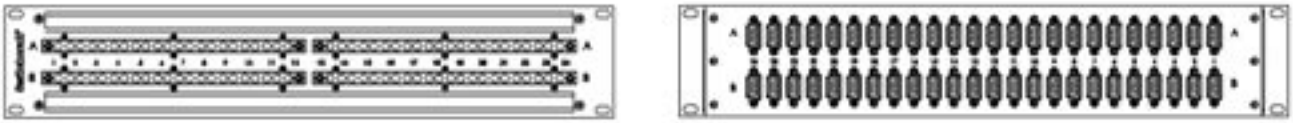

**RS422H4N242**
**24 Horizontal Paired Jacks**
**Front and Back Views**

**Ordering Information**

| Part Number | No. of Jacks | Front Panel Layout | Back Plane | Rack Height |
|---|---|---|---|---|
| **RS422H4N081** | 2 x 8 | Horizontal | 9 Pin D-Sub | 1 |
| **RS422V4N081** | 2 x 8 | Vertical | 9 Pin D-Sub | 1 |
| **RS422H4N162** | 2 x 16 | Horizontal | 9 Pin D-Sub | 1, 2 |
| **RS422V4N162** | 2 x 16 | Vertical | 9 Pin D-Sub | 1, 2 |
| **RS422H4N242** | 2 x 24 | Horizontal | 9 Pin D-Sub | 2 |
| **RS422V4N242** | 2 x 24 | Vertical | 9 Pin D-Sub | 2 |
| **RS422V4N322** | 2 x 32 | Vertical | 9 Pin D-Sub | 2 |
| **RS422PH4N081** | 2 x 8 | Horizontal | PPT Punchdown | 1 |
| **RS422PV4N081** | 2 x 8 | Vertical | PPT Punchdown | 1 |
| **RS422PH4N162** | 2 x 16 | Horizontal | PPT Punchdown | 1, 2 |
| **RS422PV4N162** | 2 x 16 | Vertical | PPT Punchdown | 1, 2 |
| **RS422PH4N242** | 2 x 24 | Horizontal | PPT Punchdown | 2 |
| **RS422PV4N242** | 2 x 24 | Vertical | PPT Punchdown | 2 |
| **RS422PV4N322** | 2 x 32 | Vertical | PPT Punchdown | 2 |

DIMENSIONS ARE FOR REFERENCE ONLY Inch (mm)


® Registered trademark of Switchcraft, Inc.
Note: Contact your Switchcraft Representative for price and delivery

* Please visit the product pages on our website for the most up-to-date product information

# VPP VIDEO PATCHBAY SERIES

The VPP Series video patchbays offer a wide variety of options for video patching. The HD Series meets SMPTE 292M specifications for high definition video signaling, covering a bandwidth range from DC to 2.4GHz. The SD Series is perfect for serial digital, with a bandwidth from DC to 1.75GHZ. Both come in either terminated or non-terminated, 24 or 26 jacks, 1.75" or 3.5" heights.

## FEATURES AND BENEFITS

- HD Series meets SMPTE 292M Specifications
- SD Series has a bandwidth from DC to 1.75GHz
- Black thermoplastic modules insulate jacks from chassis
- Jacks feature rugged heavy duty housings

## VIDEO JACK SPECIFICATIONS
## ELECTRICAL

**Rated Bandwidth:** 2.4 GHz (HD), 1.75 GHz (SD)
**Characteristic Impedance:** 75 ohms
**Return Loss:** Better than –15 dB
**Insertion Loss:** Better than –.5 dB
**Contact Resistance:** Less than 20 milliohms
**Termination Resistance:** 75 W, ±1%
**Center Conductor:** Accepts .090 pin diameter

## MECHANICAL

**Mechanical Shock:** Per MIL-STD-202, Method 213, Test condition I
**Vibration:** Per MIL-STD-202, Method 201
**Insertion Force:** 12 lbs. maximum
**Withdrawal Force:** 3 lbs. minimum
**Life Cycle:** 30,000

## MATERIAL

**Housing:** Zinc alloy, nickel plated
**Center Contacts:** Copper alloy, gold plated
**Switching Springs:** Copper alloy, gold plated
**Grounding Contacts:**
HD Series - Copper alloy, gold plated
SD Series - Copper alloy, nickel plated
**Insulators:** Thermoplastic, UL 94V-0 rated

## ENVIRONMENTAL

**Operating Temperature:** – 40ºC to 65ºC
**Storage Temperature:** – 55ºC to 85ºC
**Thermal Shock:** Per MIL-STD-202, Method 107
**Moisture and Humidity:**
Per MIL-STD-202, Method 106

**Ordering Information**

| Part Number | Type of Jack | No. of Jacks | Height | Description |
|---|---|---|---|---|
| **VPP24K1HD*75T** | HD | 24 | 1.75" | Terminated |
| **VPP24K1HD*NT** | HD | 24 | 1.75" | Non-term |
| **VPP24K1SD*75T** | SD | 24 | 1.75" | Terminated |
| **VPP24K1SD*NT** | SD | 24 | 1.75" | Non-term |
| **VPP26K1HD*75T** | HD | 26 | 1.75" | Terminated |
| **VPP26K1HD*NT** | HD | 26 | 1.75" | Non-term |
| **VPP26K1SD*75T** | SD | 26 | 1.75" | Terminated |
| **VPP26K1SD*NT** | SD | 26 | 1.75" | Non-term |
| **VPP24K3HD*75T** | HD | 24 | 3.5" | Terminated |
| **VPP24K3HD*NT** | HD | 24 | 3.5" | Non-term |
| **VPP24K3SD*75T** | SD | 24 | 3.5" | Terminated |
| **VPP24K3SD*NT** | SD | 24 | 3.5" | Non-term |
| **VPP26K3HD*75T** | HD | 26 | 3.5" | Terminated |
| **VPP26K3HD*NT** | HD | 26 | 3.5" | Non-term |
| **VPP26K3SD*75T** | SD | 26 | 3.5" | Terminated |
| **VPP26K3SD*NT** | SD | 26 | 3.5" | Non-term |

*Add "N" for non-normalled version

DIMENSIONS ARE FOR REFERENCE ONLY Inch (mm)

* Please visit the product pages on our website for the most up-to-date product information

## VPP VIDEO PATCHBAY SERIES (continued)

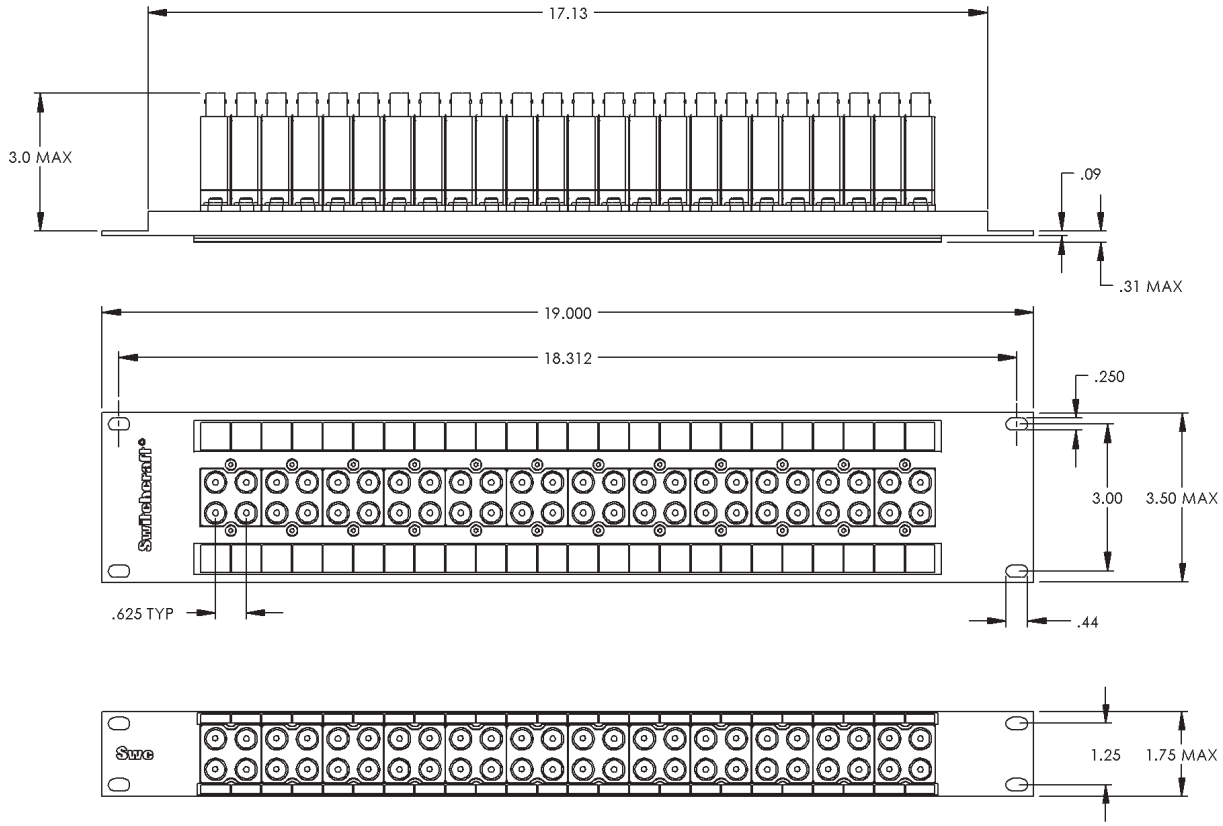


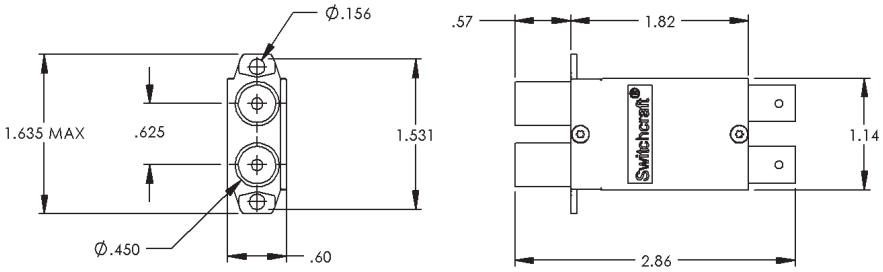


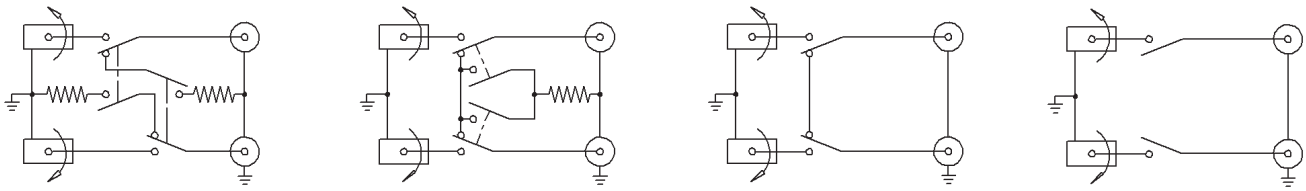

NON-NORMALLED TERMINATED | NORMALLED TERMINATED | NORMALLED NON-TERMINATED | NON-NORMALLED NON-TERMINATED

DIMENSIONS ARE FOR REFERENCE ONLY Inch (mm)



® Registered trademark of Switchcraft, Inc.

Note: Contact your Switchcraft Representative for price and delivery

* Please visit the product pages on our website for the most up-to-date product information

## VPP VIDEO PATCHBAY SERIES (continued)

| Ordering–Individual Jacks | | |
|---|---|---|
| **Part Number** | **Type** | **Description** |
| **VJHD*75TX** | HD | Terminated |
| **VJHD*NTX** | HD | Non-terminated |
| **VJSD*75TX** | SD | Terminated |
| **VJSD*NTX** | SD | Non-terminated |
| *Add "N" for non-normalled version | | |

**SMITH CHART (TYPICAL)**

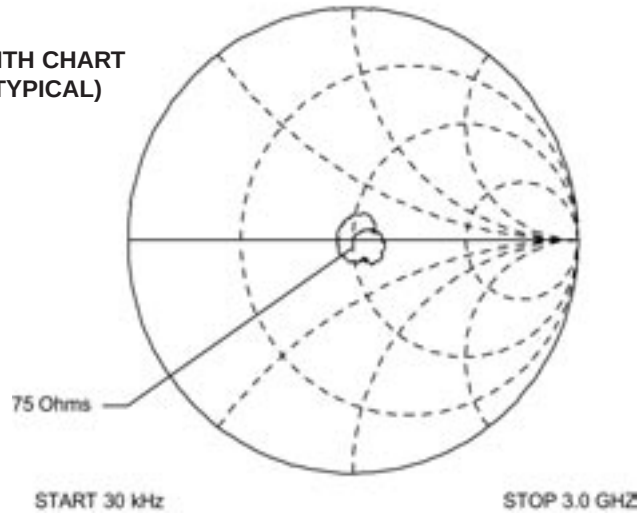


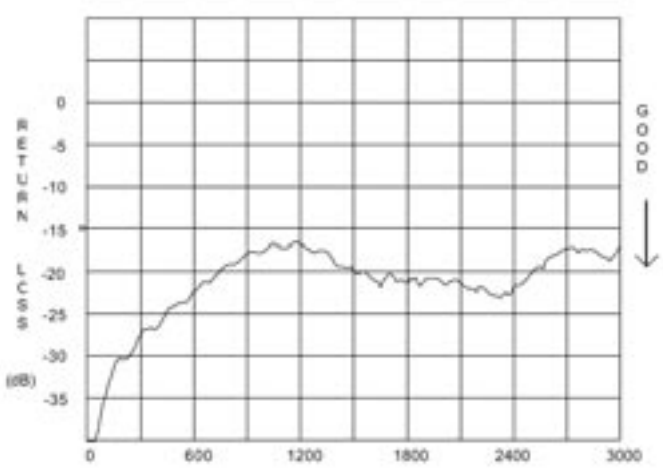


**FREQUENCY (MHz)**

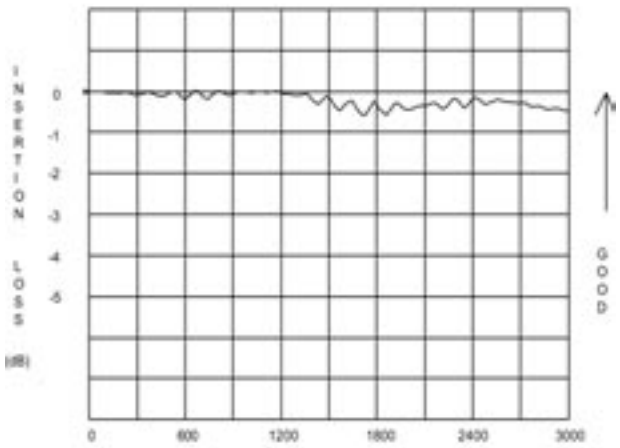


**FREQUENCY (MHz)**

DIMENSIONS ARE FOR REFERENCE ONLY Inch (mm)

* Please visit the product pages on our website for the most up-to-date product information

# MVP MIDSIZE VIDEO PATCHBAY SERIES

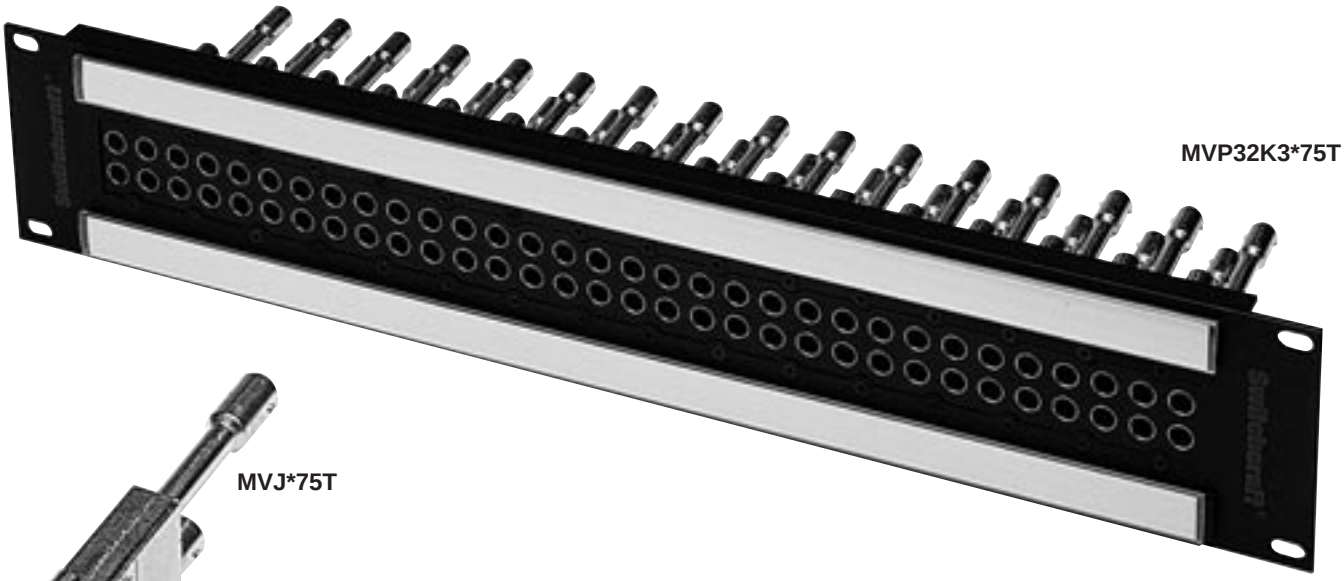

MVP32K3*75T

MVJ*75T

The MVP Series video patchbays offer outstanding performance and high density. Patchbays consist of 32 jacks in either 1RU or 2RU heights, jacks come either terminated or non-terminated. These jacks are rated from DC to 3 GHz, and are rated at 30,000 lifecycles.

## FEATURES AND BENEFITS

- Midsize video jacks rated from DC to 3 GHz
- 32 midsize jacks mounted either 1RU, 1.5RU or 2RU panel
- Available in terminated or non-terminated configurations

## SPECIFICATIONS

### MATERIAL

**Frame:** Aluminum, black anodized
**Designation Strips:** Vinylite, white
**Designation Strip Covers:** Lexan, transparent
**Jack Inserts:** Thermoplastic, UL 94V-0 rated

### MIDSIZE VIDEO JACK SPECIFICATIONS

### ELECTRICAL

**Rated Bandwidth:** 3.0 GHz
**Characteristic Impedance:** 75 ohms
**Return Loss:** See Typical Return Loss Chart
**Insertion Loss:** See Typical Insertion Loss Chart
**Contact Resistance:** Less than 20 milliohms
**Termination Resistance:** 75 W, ±1%
**Center Conductor:** Accepts .048 pin diameter

### MECHANICAL

**Mechanical Shock:** Per MIL-STD-202, Method 213, Test condition I
**Vibration:** Per MIL-STD-202, Method 201
**Insertion Force:** 12 lbs. maximum
**Withdrawal Force:** 3 lbs. minimum
**Life Cycle:** 30,000

### MATERIAL

**Housing:** Zinc alloy, nickel plated
**Center Contacts:** Copper alloy, gold plated
**Switching Springs:** Copper alloy, gold plated
**Grounding Contacts:** Copper alloy, gold plated
**BNC Insulators:** Teflon
**Actuators:** Thermoplastic, UL94V-0 rated

### ENVIRONMENTAL

**Operating Temperature:** – 40ºC to 65ºC
**Storage Temperature:** – 55ºC to 85ºC
**Thermal Shock:** Per MIL-STD-202, Method 107
**Moisture and Humidity:** Per MIL-STD-202, Method 106

**Ordering Information**

| Part Number | Type of Jack | Height | Description |
|---|---|---|---|
| **MVP32K1*75T** | Midsize | 1.75" | Terminated |
| **MVP32K1*NT** | Midsize | 1.75" | Non-terminated |
| **MVP32K3*75T** | Midsize | 3.5" | Terminated |
| **MVP32K3*NT** | Midsize | 3.5" | Non-terminated |

* Add “N” for non-normalled version

Note: For 1.5RU (2.62" height), use K2

DIMENSIONS ARE FOR REFERENCE ONLY Inch (mm)



® Registered trademark of Switchcraft, Inc.
Note: Contact your Switchcraft Representative for price and delivery

* Please visit the product pages on our website for the most up-to-date product information

## MVP MIDSIZE VIDEO PATCHBAY SERIES (continued)

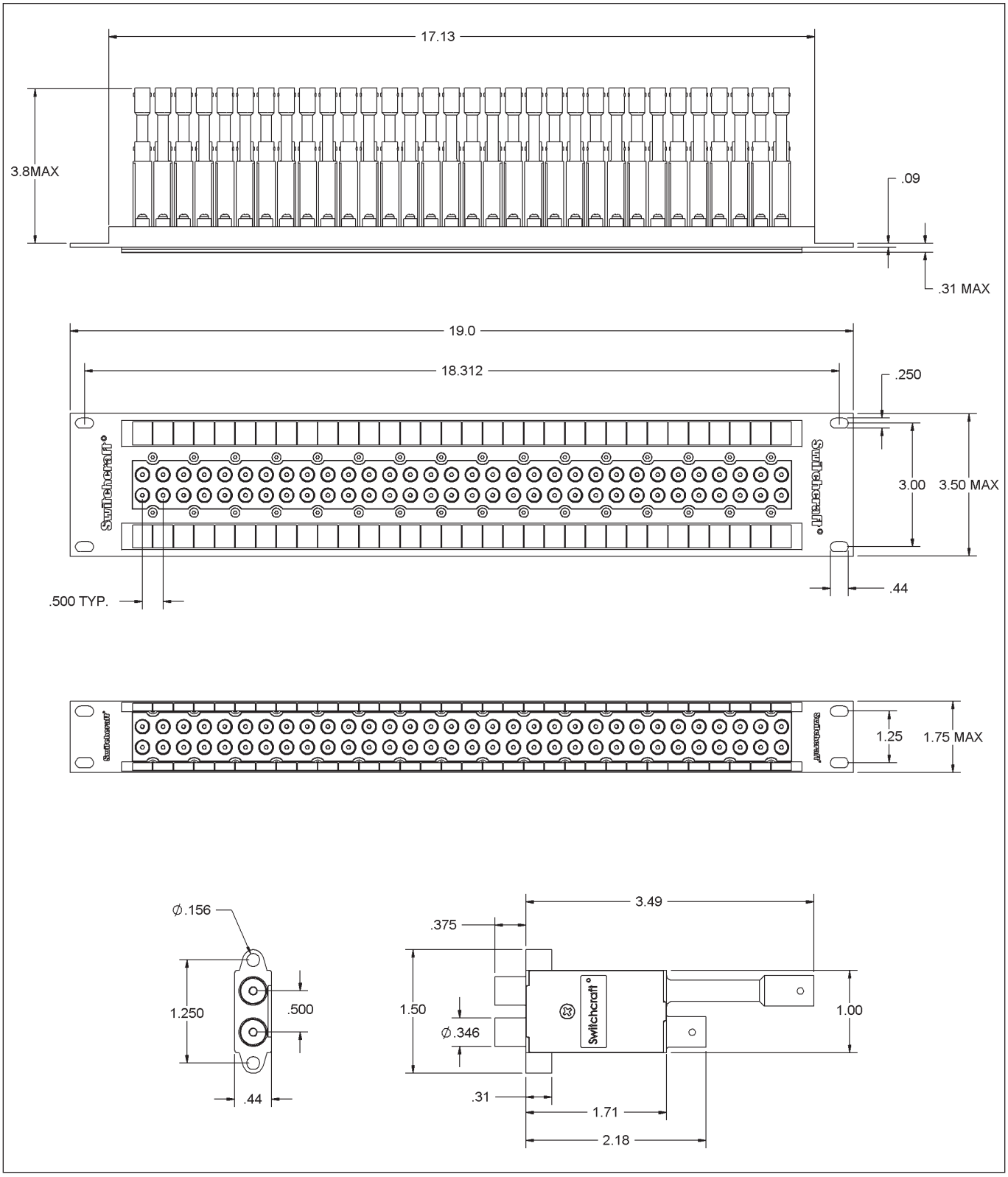


DIMENSIONS ARE FOR REFERENCE ONLY Inch (mm)

* Please visit the product pages on our website for the most up-to-date product information

# MVP MIDSIZE VIDEO PATCHBAY SERIES (continued)

| Ordering Information | |
|---|---|
| **Part Number** | **Description** |
| **MVJ*75TX** | Terminated |
| **MVJ*NTX** | Non-terminated |
| *Add "N" for non-normalled version | |

**SMITH CHART (TYPICAL)**

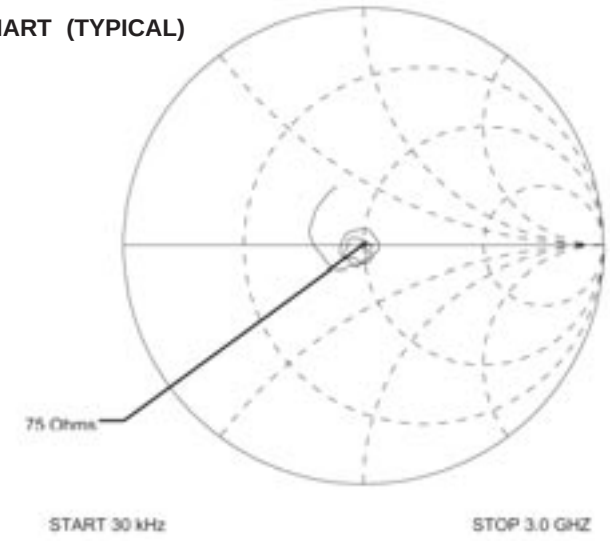


**RETURN LOSS (TYPICAL)**

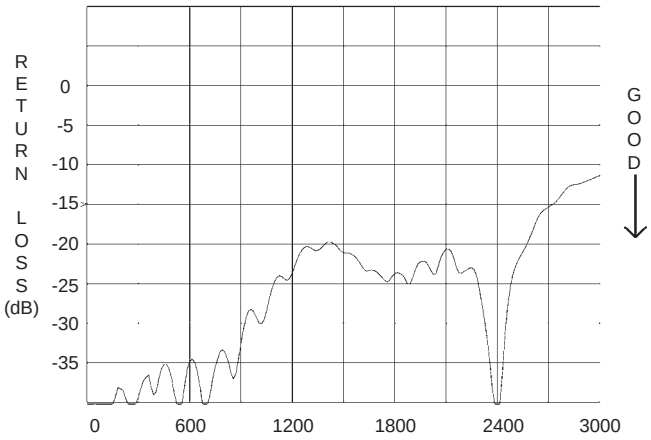


**RETURN LOSS (TYPICAL)**

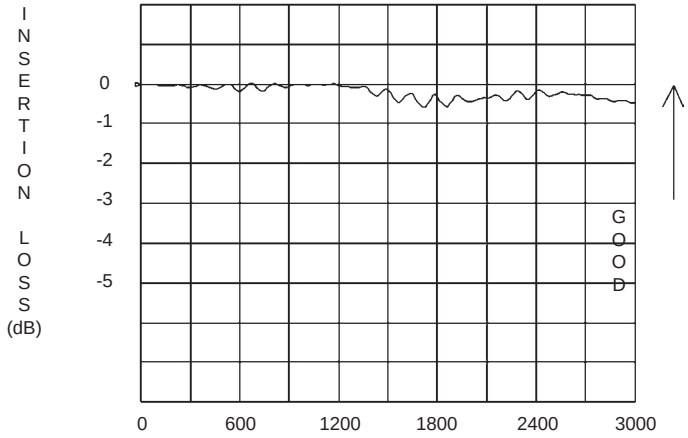


DIMENSIONS ARE FOR REFERENCE ONLY Inch (mm)



® Registered trademark of Switchcraft, Inc.

Note: Contact your Switchcraft Representative for price and delivery

* Please visit the product pages on our website for the most up-to-date product information

# VAP VIDEO/AUDIO PATCHBAY SERIES

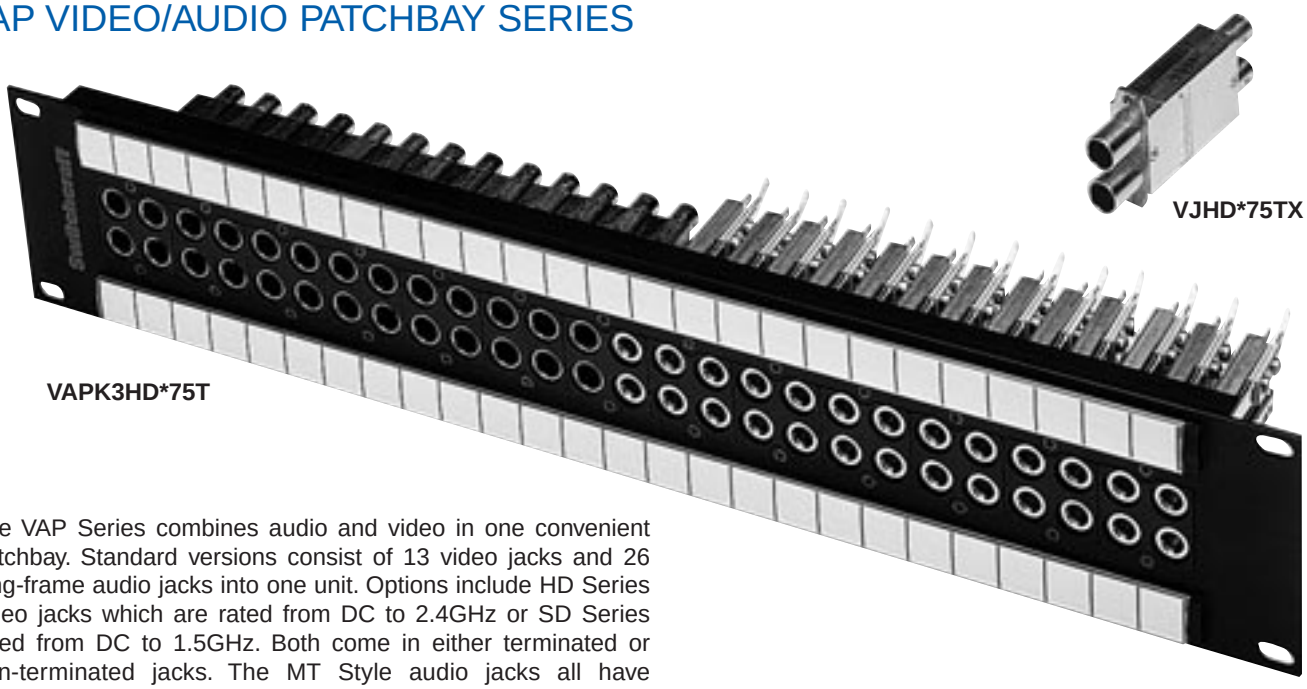


The VAP Series combines audio and video in one convenient patchbay. Standard versions consist of 13 video jacks and 26 long-frame audio jacks into one unit. Options include HD Series video jacks which are rated from DC to 2.4GHz or SD Series rated from DC to 1.5GHz. Both come in either terminated or non-terminated jacks. The MT Style audio jacks all have nickel-plated steel frames and gold-plated switching contacts. Flared terminals make soldering easier. All audio jacks are T,R,S, TN, and RN. Individual modules are useful for custom configurations.

## FEATURES AND BENEFITS

- Combines 13 video jacks and 26 long-frame audio jacks into one patchbay
- Available with either HD Series or SD Series video jacks
- All audio jacks are nickel-plated with steel frames and gold-plated switching contacts
- Audio modules consist of 4 YMT334BN jacks, video modules consist of 2 dual video jacks

## VIDEO JACK SPECIFICATIONS

### ELECTRICAL

**Rated Bandwidth:** 2.4 GHz (HD), 1.75 GHz (SD)
**Characteristic Impedance:** 75 ohms
**Return Loss:** Better than –15 dB
**Insertion Loss:** Better than –.5 dB
**Contact Resistance:** Less than 20 milliohms
**Termination Resistance:** 75 W, ±1%
**Center Conductor:** Accepts .090 pin diameter

### MECHANICAL

**Mechanical Shock:** Per MIL-STD-202, Method 213, Test condition I
**Vibration:** Per MIL-STD-202, Method 201
**Insertion Force:** 12 lbs. maximum
**Withdrawal Force:** 3 lbs. minimum
**Life Cycle:** 30,000

### MATERIAL

**Housing:** Zinc alloy, nickel plated
**Center Contacts:** Copper alloy, gold plated
**Switching Springs:** Copper alloy, gold plated
**Grounding Contacts:**
HD Series - Copper alloy, gold plated
SD Series - Copper alloy, nickel plated
**Insulators:** Thermoplastic, UL 94V-0 rated

### ENVIRONMENTAL

**Operating Temperature:** – 40ºC to 65ºC
**Storage Temperature:** – 55ºC to 85ºC
**Thermal Shock:** Per MIL-STD-202, Method 107
**Moisture and Humidity:** Per MIL-STD-202, Method 106

**Ordering Information**

| Part Number | Type of Jack | Height | Description |
|---|---|---|---|
| **VAPK1HD*75T** | HD | 1.75" | Terminated |
| **VAPK1HD*NT** | HD | 1.75" | Non-terminated |
| **VAPK1SD*75T** | SD | 1.75" | Terminated |
| **VAPK1SD*NT** | SD | 1.75" | Non-terminated |
| **VAPK3HD*75T** | HD | 3.5" | Terminated |
| **VAPK3HD*NT** | HD | 3.5" | Non-terminated |
| **VAPK3SD*75T** | SD | 3.5" | Terminated |
| **VAPK3SD*NT** | SD | 3.5” | Non-terminated |
| **Modules** | | | |
| **VMAFN** | MT | | 4- YMT334BN jacks |
| **VMVHD*75T** | HD | | 2- HD terminated jacks |
| **VMVHD*NT** | HD | | 2- HD non-terminated jacks |
| **VMVSD*75T** | SD | | 2- SD terminated jacks |
| **VMVSD*NT** | SD | | 2-SD non-terminated jacks |

*Add “N” for non-normalled version

DIMENSIONS ARE FOR REFERENCE ONLY Inch (mm)

* Please visit the product pages on our website for the most up-to-date product information

## VAP VIDEO/AUDIO PATCHBAY SERIES (continued)

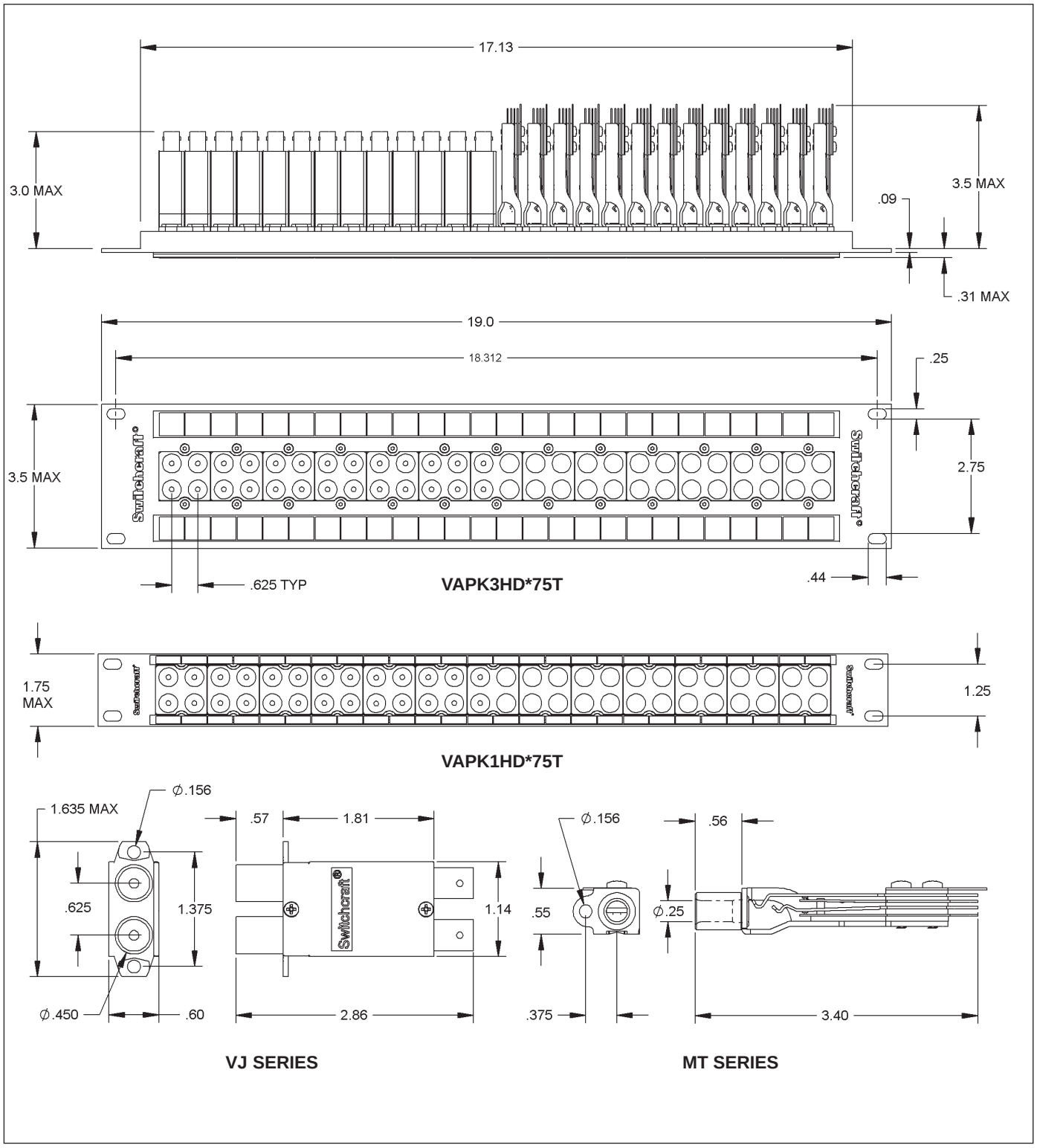


DIMENSIONS ARE FOR REFERENCE ONLY Inch (mm)



® Registered trademark of Switchcraft, Inc.
Note: Contact your Switchcraft Representative for price and delivery

* Please visit the product pages on our website for the most up-to-date product information

# MBPK VIDEO/AUDIO PATCHBAY SERIES

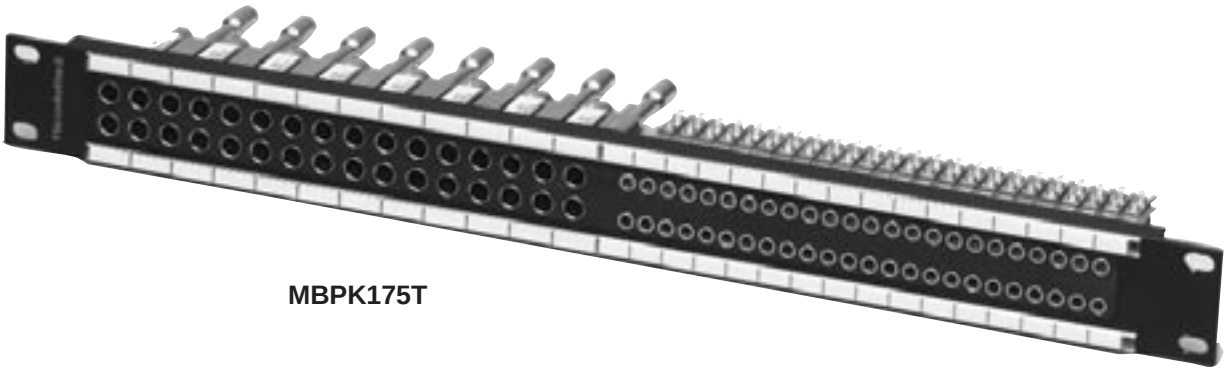

**MBPK175T**

The MBPK Series combines audio and video in one convenient patchbay. The patchbay consists of 16 midsize video jacks and 48 TT bantam jacks. Options include 75 Ohm terminated or non-terminated video jacks. All TT bantam jacks have T, R, S, TN and RN solder terminals. Audio jacks have nickel-plated steel frames, gold-plated crossbar switching contacts and flared terminals for easier soldering.

## FEATURES AND BENEFITS

Combines 16 midsize video jacks and 48 TT bantam audio jacks

Video jacks are rated from DC to 3.0 GHZ

All audio jacks are nickel-plated with steel frames and gold-plated crossbar switching contacts

For non-terminated version, use part no. MBPK1NT

## VIDEO JACK SPECIFICATIONS

See page 196 for details

## AUDIO JACK SPECIFICATIONS

See page 164 for details

## MATERIALS

### FRAME

Aluminum, black anodized

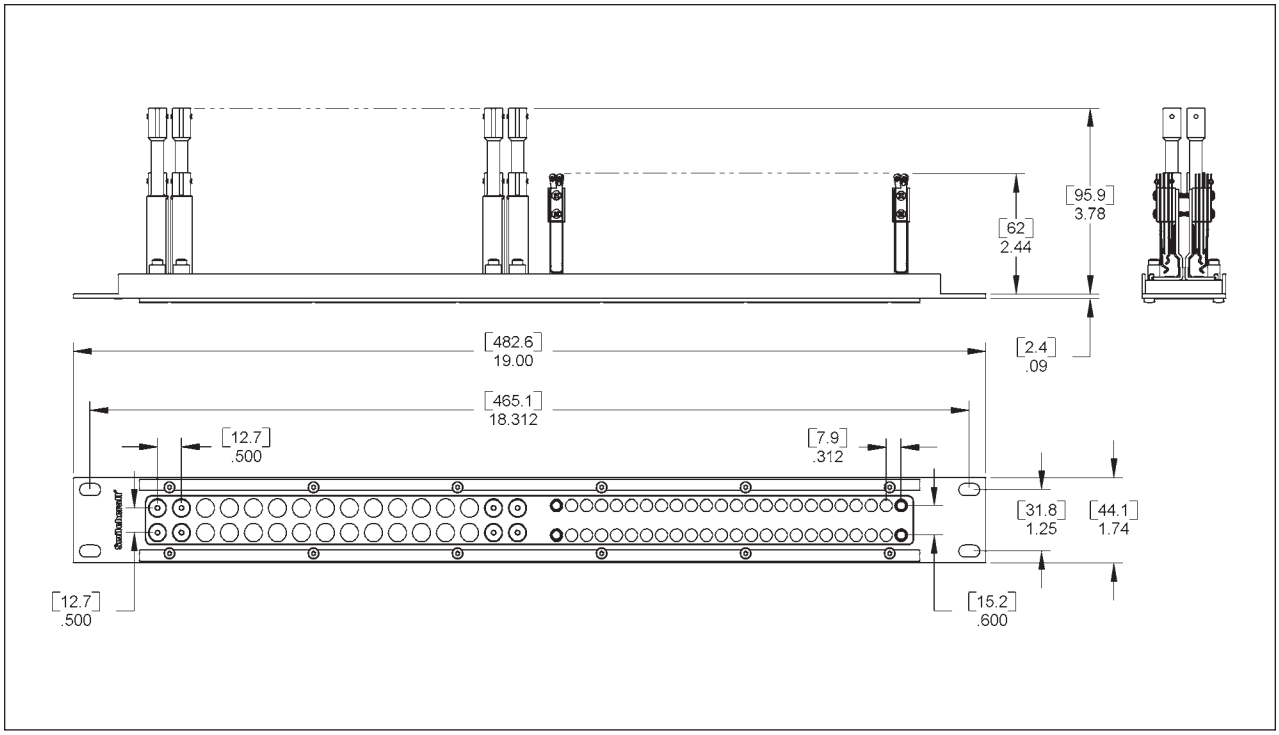


DIMENSIONS ARE FOR REFERENCE ONLY Inch (mm)

* Please visit the product pages on our website for the most up-to-date product information

# LONG FRAME (1/4") TELEPHONE JACK PANELS

## STANDARD SINGLE ROW JACK PANELS
### SERIES 1200 AND 1400

**SERIES 1200**
Panels accomodate 24 T-Jax® jacks in standard 1.75 inch x 19 inch racks. Jack openings are on alternate .625 inch and .750 inch spacing; twin plugs cannot be cross-connected between adjacent jack pairs. Includes designation strips (marking strips and transparent plastic covers).

**SERIES 1300**
Same as Series 1200, except MT-Jax® are used in panel assemblies.

**SERIES 1400**
Mounts 26 T-Jax®. Openings are on continuous .625 inch centers. Twin plug can be used on any two adjacent jacks. Single designation strip (marking strip, and plastic cover). WEco equivalent is 230B.

**SERIES 1400300**
Same as Series 1400, except designation strip is Kwik-Change® type which is easier to install and remove and provides larger vertical designation marking area. Strip holder is recessed into top of panel for additional panel strength. 1400301 has single height Kwik-Change® designation strip. 1400315 has a single height Kwik- Change® designation strip along bottom of panel and double height strips above jacks. Top designation strip has .188 inch overhang above 1.75 inch panel height, to help seal small opening between adjacent panels. CAUTION: Because of this overhang, 1400315 cannot be mounted one above another in a rack.

**SERIES 1500**
Same as Series 1400 except MT-Jax® are used in panel assemblies.

**SPECIFICATIONS**
**Jack Panel:** General purpose black phenolic resin
**Frame (except 1400300):** Plated, steel
**End Bracket and Side Strip (1400300 only):** Cold rolled plated steel
**Designation Strip (except 1400300):** Clear plastic.
**"Kwik-Change" Designation Strip (1400300):** Extruded aluminum, black anodized and black thermoplastic UL 94V-0.
**Marking Strip:** White plastic, matte finish.
**Marking Strip Cover:** Clear extruded plastic.
**Screws:** #6-32 x .25 inch phillips RHMS (for mounting jacks).

**ORDERING**
Part number table lists blank panels and popular jack panel assemblies. If you wish to mount components on basic panels, order jacks, lamp jacks, and switches separately. (See appropriate section in this catalog.) For other panel assemblies, provide complete details with your inquiry or order. Switchcraft can build special assemblies to your requirements in small or large quantities. See wire wrapping data. Series 1200 and 1400 are available with holes pre-drilled for vertical designation strips (Series DS320). Add prefix "D" to part numbers for pre-drilled panels: D1200, D1400301, etc.

**Series 1200**
*Shown with optional jacks. See next page for specific part numbers.

**Series 1400**
*Shown with optional jacks. See next page for specific part numbers.

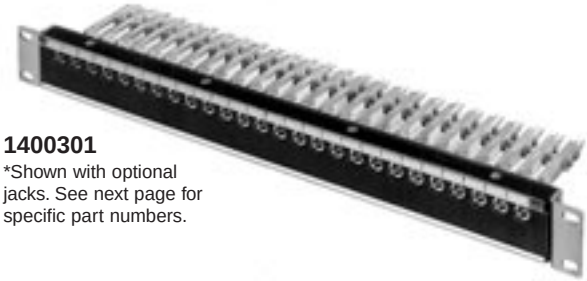

**1400301**
*Shown with optional jacks. See next page for specific part numbers.

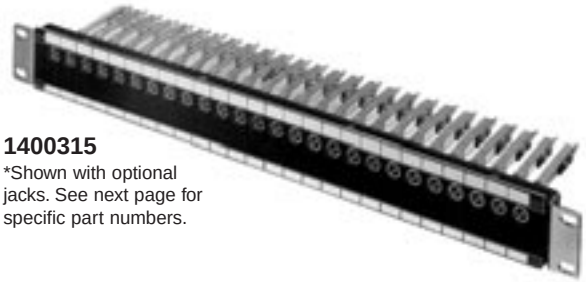

**1400315**
*Shown with optional jacks. See next page for specific part numbers.

DIMENSIONS ARE FOR REFERENCE ONLY Inch (mm)



® Registered trademark of Switchcraft, Inc.
Note: Contact your Switchcraft Representative for price and delivery

* Please visit the product pages on our website for the most up-to-date product information

## LONG FRAME (1/4") TELEPHONE JACK PANELS (continued)

| Part Numbers | | | Part Numbers | Description | |
|---|---|---|---|---|---|
| | Assembly with Jacks With Solder Lugs | | Assembly with Jacks With Wire-Wrapping Terminals | Number of Jacks | Type of Jacks Installed |
| Panel Only | Straight | Offset | | | |
| 1200 | - | - | - | None | |
| - | 1332A | ◊X1332A | ◊W1332A | 24 | MT332A , XMT332A or WMT332A MT-Jax® |
| - | ◊1332B | ◊X1332B | - | 24 | MT332B or XMT332B MT-Jax® |
| - | ◊1334B | ◊X1334B | ◊W1334B | 24 | MT334B,XMT334B or WMT334B MT-Jax® |
| 1400 | - | - | - | None | |
| 1400301 | - | - | - | None | |
| ◊1400315 | - | - | - | None | |
| - | 1532A | X1532A | - | 26 | MT332A or XMT332A MT-Jax® |
| - | ◊1532A301 | - | ◊W1532A301 | 26 | MT332A or WMT332A MT-Jax® |
| - | ◊1532B | - | - | 26 | MT332B MT-Jax® |
| - | ◊1532B301 | ◊X1532B301 | ◊W1532B301 | 26 | MT332B, XMT332B or WMT332B MT-Jax® |
| - | ◊1534B | ◊X1534B | ◊W1534B | 26 | MT334B, XMT334B or WMT334B MT-Jax® |
| - | - | - | ◊W1534B301 | 26 | WMT334B MT-Jax® |
| - | - | ◊X1542B315 | - | 26 | XMT342B MT-Jax® |

◊ Special order only; contact factory for price and delivery.
1. Prefix "X" denotes offset lugs for buss wiring.

**Jack Mounting Screws:** #6-32, **P10725**, can be ordered separately. Contact Switchcraft.
**Legend Cards** (Series 1200, 1300) - **A1029**
**Legend Windows** (Series 1200, 1300) - **A1030**

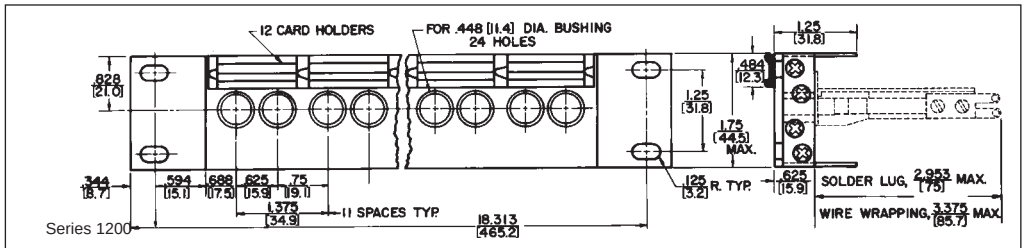

Series 1200

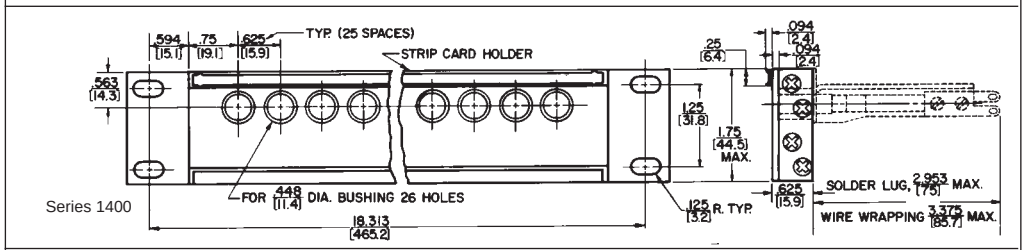

Series 1400

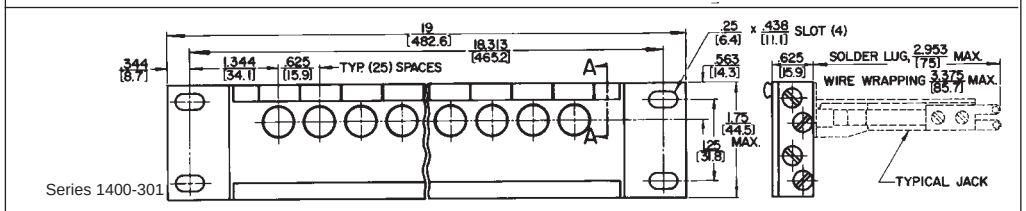

Series 1400-301

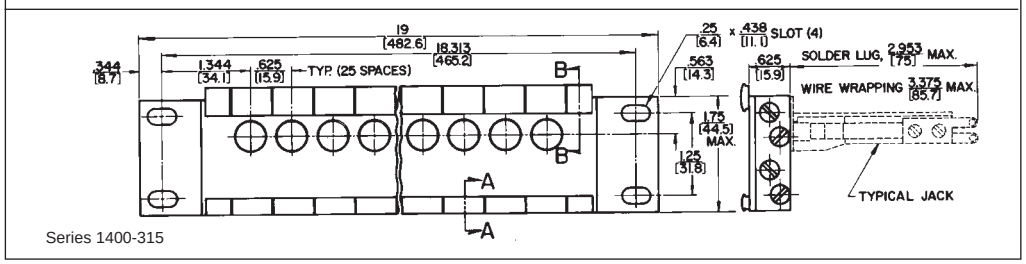

Series 1400-315

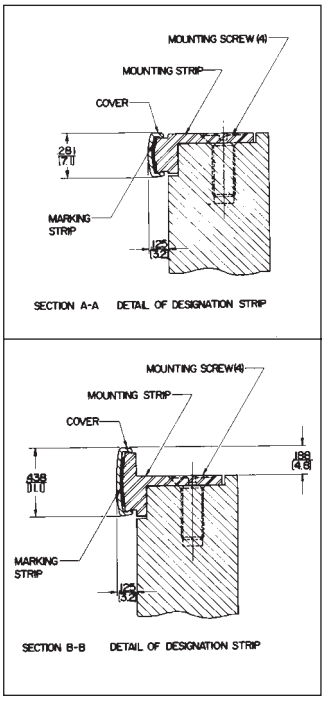


DIMENSIONS ARE FOR REFERENCE ONLY Inch (mm)

* Please visit the product pages on our website for the most up-to-date product information

# LONG FRAME (1/4") TWIN ROW JACK PANELS

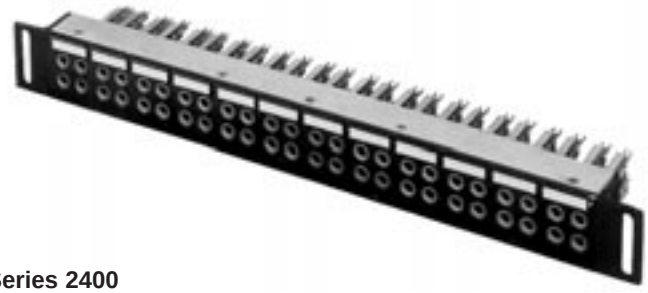

**Series 2400**
*Shown with optional jacks, See next page for specific part numbers.

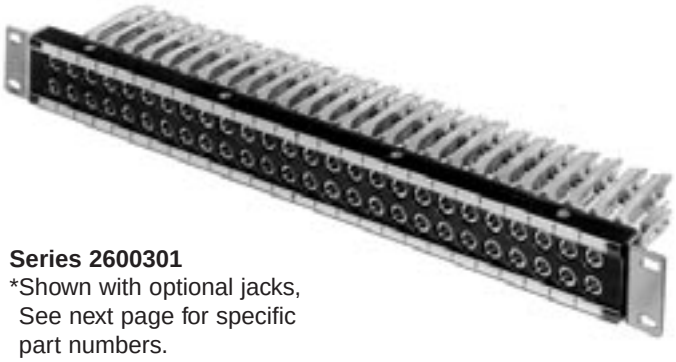

**Series 2600301**
*Shown with optional jacks, See next page for specific part numbers.

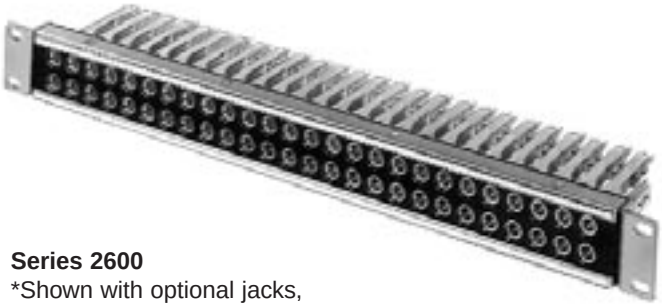

**Series 2600**
*Shown with optional jacks, See next page for specific part numbers.

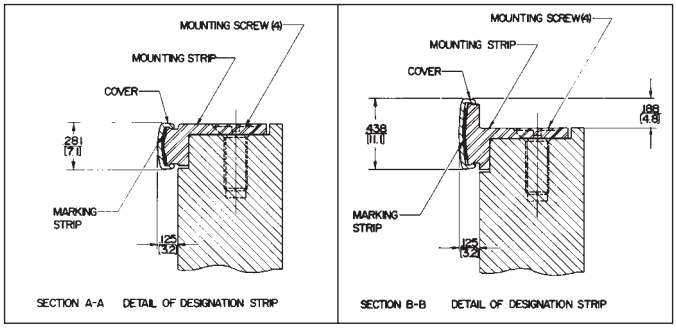


## STANDARD TWIN ROW JACK PANELS SERIES 2400, 2600, 2600300, 2700300 – PHENOLIC

Twin row jack panels offer greater jack density - up to 52 jacks per panel. All panels fit standard 19" wide racks. Blank panels or standard assemblies can be ordered from Switchcraft. Series 2600 panels are direct equivalent to WEco #230A.

### SERIES 2400

Twin row panel accommodates 48 T-Jax®. Openings are on alternate .625" and .75" centers. Panel is 2.125" high and fits standard 19" racks. Twin plug cannot be cross-connected between jacks in adjacent quads, but may be connected either horizontally or vertically in the same quad. Single designation strip.

### SERIES 2500

Same as Series 2400 except MT-Jax® are used.

### SERIES 2600

Twin row panel accommodates 52 T-Jax® in standard 1.75" x 19" racks. Jack openings are on continuous centers. Twin plug can be connected to any two adjacent jacks, either horizontally or vertically. Two designation strips. WEco equivalent is #230A.

### SERIES 2600300

Same as Series 2600, except designation strips are Kwik-Change® type, providing larger vertical marking area. Top strip holder is recessed into top of panel to provide additional strength. 2600301 has single height designation strips (one above and below each row of jacks).

### 2600310

Has a double height strip above top row and a steel reinforcing strip below bottom row. Top strip has .188" overhang above 1.75" panel height, helping seal the small opening between adjacent panels. Note: overhang prevents mounting panel one above another in a rack.

### SERIES 2700

Same as Series 2600 except MT-Jax® are used in panel assemblies. The series is available with cable tie bar.

### ORDERING

1. Order basic panels and popular assemblies by part number from table.
2. For special panels provide complete details with your inquiry or order.
3. Series 2600 is available with hole pre-drilled for vertical designation strips, Series DS320. Add prefix “D” to part number (D2600301, etc.).
4. Jack Mounting Screws: #6-32, P10725, can be ordered separately. Contact Switchcraft.

DIMENSIONS ARE FOR REFERENCE ONLY Inch (mm)


® Registered trademark of Switchcraft, Inc.
Note: Contact your Switchcraft Representative for price and delivery

* Please visit the product pages on our website for the most up-to-date product information

## LONG FRAME (1/4") TWIN ROW JACK PANELS (continued)

| Part Numbers | | | Part Numbers | Description | |
|---|---|---|---|---|---|
| | Assembly with Jacks Having Solder Lugs | | | | |
| Panel Only | Straight | Offset[1] | Assembly with Jacks Having Wire-Wrapping Terminals | Number of Jacks | Type of Jack Installed |
| 2400 | - | - | - | None | |
| - | ◊2432A | ◊X2432A | - | 48 | T332A |
| - | ◊2432B | ◊X2432B | - | 48 | T332B |
| - | ◊2434B | ◊X2434B | - | 48 | T334B or XMT334B T-Jax® |
| - | 2532A | ◊X2532A | ◊W2532A | 48 | MT332A, XMT332A or WMT332A MT-Jax® |
| - | ◊2532B | ◊X2532B | - | 48 | MT332B or XMT332B MT-Jax® |
| - | ◊2533 | - | - | 48 | MT333 MT-Jax® |
| - | ◊2533B | - | ◊W2533B | 48 | MT333B or WMT333B MT-Jax® |
| - | ◊2534B | X2534B | - | 48 | MT334B or XMT334B MT-Jax® |
| - | ◊2542B | - | - | 48 | MT342B MT-Jax® |
| - | ◊2544B | - | - | 48 | MT344B, MT-Jax® |
| - | ◊2588 | - | - | 24 | MT388, Twin MT-Jax® |
| - | ◊2589 | - | - | 24 | MT389 Twin MT-Jax® |
| 2600 | - | - | - | None | |
| 2600301 | - | - | - | None | (WEco equivalent #230A) |
| 2600310 | - | - | - | None | |
| - | ◊2732A | ◊X2732A | - | 52 | MT332A or XMT332A MT-Jax® |
| - | ◊2732A301 | ◊X2732A301 | ◊W2732A301 | 52 | MT332A, XMT332A or WMT332A MT-Jax® |
| - | ◊2732B | ◊X2732B | ◊W2732B | 52 | MT332B, XMT332B or WMT332B MT-Jax® |
| - | ◊2732B301 | ◊X2732B301 | ◊W2732B301 | 52 | MT332B, XMT332B or WMT332B MT-Jax® |
| - | ◊2733B | - | - | 52 | MT333B, MT-Jax® |
| - | ◊2734B | ◊X2734B | - | 52 | MT334B or XMT334B MT-Jax® |
| - | ◊2734B301 | ◊X2734B301 | ◊W2734B301 | 52 | MT334B, XMT334B or WMT334B MT-Jax® |
| - | ◊2789 | - | ◊W2789 | 26 | MT389 or WMT389 Twin MT-Jax® |
| - | - | ◊X2832A | - | 48 | XT332A |
| - | - | ◊X2932A | - | 48 | XMT332A |

1. Prefix "X" denotes offset lugs for buss wiring.
◊ Special order only; contact factory for price and delivery.

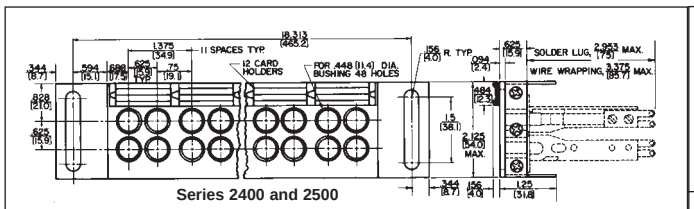

Series 2400 and 2500

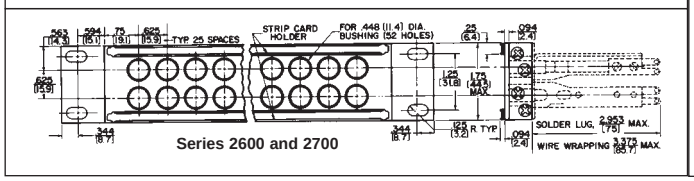

Series 2600 and 2700

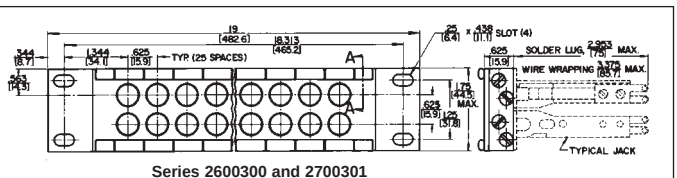

Series 2600300 and 2700301

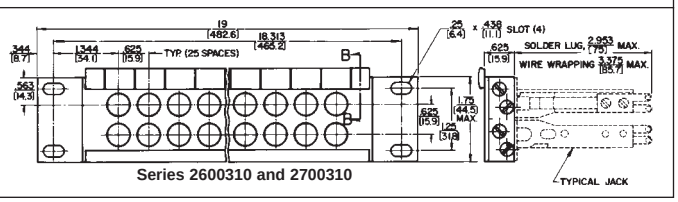

Series 2600310 and 2700310

DIMENSIONS ARE FOR REFERENCE ONLY Inch (mm)

* Please visit the product pages on our website for the most up-to-date product information

# LONG FRAME (1/4") MODULAR TWIN ROW JACK PANELS

**SERIES JP122S34B**
*Shown with optional jacks, See next page for specific part numbers.

**SERIES JP072S32A**
*Shown with optional jacks, See next page for specific part numbers.

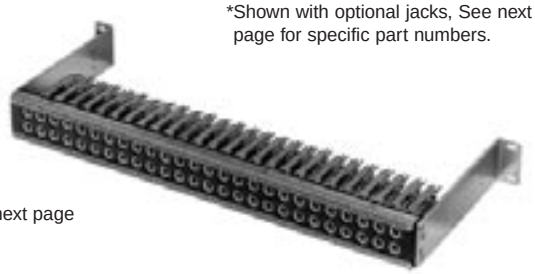

**SERIES JP032S32B**
*Shown with optional jacks, See next page for specific part numbers.

## SERIES JP012000 THROUGH JP122000

Series JP® Modular Jack Panels feature a modular packaging concept. Jacks are mounted on inserts then complete modular insert assemblies are mounted to the panel from the rear. Mounting and wiring are quick and easy. Individual jacks or complete inserts can be removed from the panel with minimum disturbance to wiring and adjacent jacks. JP panels offer three mounting styles (standard rack mount, flush mount, and extension mount), staggered or continuous-center panel openings, two panel lengths (19" and 23"), WEco equivalents, Kwik-Change® designation strips, precision manufactured modular parts, rugged black anodized aluminum frames and quick and easy module or jack removal/installation.

Each module insert has four holes which mount four MT-Jax® or two Twin-Jax®. Each modular jack panel is supplied with two Kwik-Change® designation strips. Mounting strips are integral with panel, and marking strips and clear covers snap into place quickly and easily.

### SERIES JP012000

Standard 1.75" x 19" size for console, rack or control panel mounting. Mounts 48 MT-Jax®. Openings are on alternate .625" and .75" centers in each row. A twin plug fits jacks horizontally or vertically in the same quad, but cross-connecting between quads is not possible. Includes 12 black module inserts, insert mounting screws and two Kwik-Change® designation strips.

### SERIES JP022000

Same as JP012000, except 23" wide (includes 14 inserts which accommodate 56 MT-Jax®).

### SERIES JP032000

Same as JP012000, except with 5.375" extension brackets which permit access to rear of jacks from front of panel. Brackets are supplied mounted to panel.

### SERIES JP042000

Same as JP032000, except 23" wide (includes 14 inserts which accommodate 56 MT-Jax®).

### SERIES JP052000

Same as JP012000, except designed for flush mounting or standoff mounting. Switchcraft Bracket Kit K107; Contact Switchcraft.

### SERIES JP062000

Same as JP052000, except 23" wide (includes 14 inserts which accommodate 56 MT-Jax®).

### SERIES JP072000

Same as JP012000, except mounts 52 MT-Jax® and includes 13 black module inserts. Modular equivalent of WEco #230A.

### SERIES JP082000

Same as JP072000, except 23" wide (includes 16 inserts which accommodate 64 MT-Jax®). Modular equivalent to WEco #231A.

### SERIES JP092000

Same as JP072000, except with 5.375" extension brackets which permit access to rear of jacks from front of panel. Brackets are supplied mounted to panel.

### SERIES JP102000

Same as JP092000, except 23" wide (includes 16 inserts which accommodate 64 MT-Jax®).

### SERIES JP112000

Same as JP072000, except designed for flush mounting or standoff mounting. Switchcraft Bracket Kit K107; Contact Switchcraft.

### SERIES JP122000

Same as JP112000, except 23" wide (includes 16 inserts which accommodate 64 MT-Jax®).

## SPECIFICATIONS

**Panel and Integral Designation Mounting Strips:** Aluminum alloy, extruded. Black anodized per MIL-A-8625
**Module Insert:** Molded plastic, matte finish. Black standard; white, red, green, blue or yellow available on special order
**Marking Strip:** White matte finish plastic
**Designation Strip Cover:** Extruded clear plastic
**Screws:** #6-32 x 5/15", PHMS, for jack mounting;
#4-40 x 1/2" phillips PHMS, for module insert mounting
**Brackets:** 5.375", aluminum alloy black anodized finish (JP032000, JP042000, JP092000, JP102000)
**Screws, Mounting Bracket:** #6-32, self-tapping supplied.

DIMENSIONS ARE FOR REFERENCE ONLY Inch (mm)


® Registered trademark of Switchcraft, Inc.
Note: Contact your Switchcraft Representative for price and delivery

* Please visit the product pages on our website for the most up-to-date product information

# LONG FRAME (1/4") MODULAR TWIN ROW JACK PANELS (continued)

## ORDERING

Order popular assemblies by part number from table. If you wish to mount components on the panels, order blank panels and refer to MODULE INSERTS below. On special order, various combinations of colored inserts mounted in basic panels, as well as many different types of complete assemblies are possible. Provide complete details with your inquiry or order. Standard mount panels are available with holes pre-drilled for vertical designation strips, Series DS320. Add prefix "D" to part number (JPD012000, JPD022000, JPD072000, JPD082000, etc.).

| Part Numbers* | | | |
|---|---|---|---|
| **Panel Only** | **Assembly with Jacks Having Solder Lugs** | **# of Jacks** | **MT-Jax® Installed** |
| **JP012000** | - | None | |
| - | ◊**JP012S32A** | 48 | MT332A |
| - | ◊**JP012S32B**[1] | 48 | MT332B |
| - | **JP012S34B**[1] | 48 | MT334B |
| ◊**JP022000** | - | None | |
| - | ◊**JP022S32A** | 56 | MT332A |
| - | ◊**JP022S32B** | 56 | MT332B |
| - | ◊**JP022S34B** | 56 | MT334B |
| ◊**JP032000** | - | None | |
| - | ◊**JP032S32A** | 48 | MT332A |
| - | ◊**JP032S32B** | 48 | MT332B |
| - | ◊**JP032S34B** | 48 | MT334B |
| ◊**JP042000** | - | None | |
| - | ◊**JP042S32A** | 56 | MT332A |
| - | ◊**JP042S32B** | 56 | MT332B |
| - | ◊**JP042S34B** | 56 | MT334B |
| **JP052000** | - | None | |
| - | ◊**JP052S32A** | 48 | MT332A |
| - | ◊**JP052S32B** | 48 | MT332B |
| - | ◊**JP052S34B** | 48 | MT334B |
| ◊**JP062000** | - | None | |
| - | ◊**JP062S32A** | 56 | MT332A |
| - | ◊**JP062S32B** | 56 | MT332B |
| - | ◊**JP062S34B** | 56 | MT334B |

**1.** Add a "1" to the part number to specify a cable tie bar.
**Mounting Screws:** #6-32, **P10725** for jack mounting and #4-40, **P2435** for insert mounting, can be ordered separately.
◊ Special order only; contact Switchcraft.

| Part Numbers* | | | |
|---|---|---|---|
| **Panel Only** | **Assembly with Jacks Having Solder Lugs** | **# of Jacks** | **MT-Jax® Installed** |
| **JP072000** | - | None[1] | |
| - | ◊**JP072S32A** | 52 | MT332A |
| - | ◊**JP072S32B** | 52 | MT332B |
| - | **JP072S34B** | 52 | MT334B |
| ◊**JP082000** | - | None[2] | |
| - | ◊**JP082S32A** | 64 | MT332A |
| - | ◊**JP082S32B** | 64 | MT332B |
| - | ◊**JP082S34B** | 64 | MT334B |
| ◊**JP092000** | - | None | |
| - | ◊**JP092S32A** | 52 | MT332A |
| - | ◊**JP092S32B** | 52 | MT332B |
| - | ◊**JP092S34B** | 52 | MT334B |
| ◊**JP102000** | - | None | |
| - | ◊**JP102S32A** | 64 | MT332A |
| - | ◊**JP102S32B** | 64 | MT332B |
| - | ◊**JP102S34B** | 64 | MT334B |
| ◊**JP112000** | - | None | |
| - | ◊**JP112S32A** | 52 | MT332A |
| - | ◊**JP112S32B** | 52 | MT332B |
| - | ◊**JP112S34B** | 52 | MT334B |
| ◊**JP122000** | - | None | |
| - | ◊**JP122S32A** | 64 | MT332A |
| - | ◊**JP122S32B** | 64 | MT332B |
| - | ◊**JP122S34B** | 64 | MT334B |

* Panels with jacks having wire-wrapping terminals are approximately 10% higher in price. Contact Switchcraft.
1. Non-modularized equivalent is WEco #230A.
2. Non-modularized equivalent is WEco #231A.

## MODULE INSERTS

**JP9942**

**JP9922**

**JP9902**

Standard color is black, matte finish plastic. Contact Switchcraft. Inserts are ideal for mounting directly in control panels and chassis where convenient jack connections are required. Applications include test outlets, remote equipment connections and headsets such as those used in telephone and telecommunications equipment.

| Part Number | Description |
|---|---|
| **JP9942** | Black module insert with four jack openings (less jacks). Includes two, #4-40 machine screws for mounting. |
| **JP9922** | Black module insert with two jack openings (less jacks). Includes two, #4-40 machine screws for mounting. |
| **JP9902** | Black module insert without holes. Includes two, #4-40 machine screws for mounting. Used where no jacks are needed. |

DIMENSIONS ARE FOR REFERENCE ONLY Inch (mm)

* Please visit the product pages on our website for the most up-to-date product information

## LONG FRAME (1/4") MODULAR TWIN ROW JACK PANELS (continued)

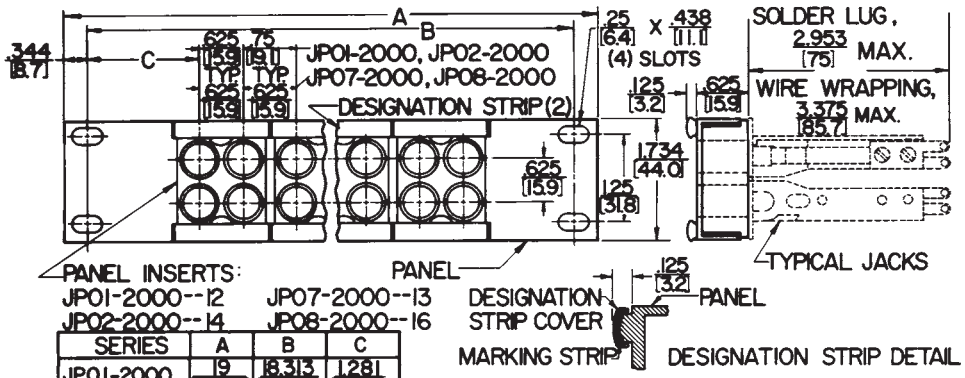


| SERIES | A | B | C |
|---|---|---|---|
| JP01-2000 | 19 [482.6] | 18.313 [465.2] | 1.281 [32.5] |
| JP02-2000 | 23 [584.2] | 22.313 [566.8] | 1.906 [48.4] |
| JP07-2000 | 19 [482.6] | 18.313 [465.2] | 1.344 [34.1] |
| JP08-2000 | 23 [584.2] | 22.313 [566.8] | 1.469 [37.3] |

**Series JP01-2000, JP02-2000, JP07-2000, JP08-2000**

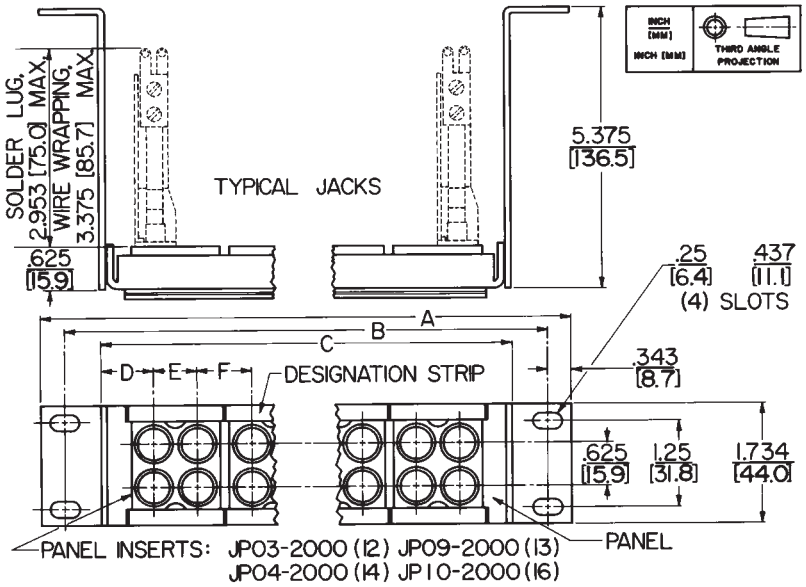


| SERIES | A | B | C | D | E | F |
|---|---|---|---|---|---|---|
| JP03-2000 | 19.0 [482.6] | 18.312 [465.1] | 17.305 [439.6] | .778 [19.8] | .625 [15.9] | .75 [19.1] |
| JP04-2000 | 23.0 [584.2] | 22.312 [566.7] | 21.305 [541.2] | 1.403 [35.6] | .625 [15.9] | .75 [19.1] |
| JP09-2000 | 19.0 [482.6] | 18.312 [465.1] | 17.305 [439.6] | .84 [21.3] | .625 [15.9] | .625 [15.9] |
| JP10-2000 | 23.0 [584.2] | 22.312 [566.7] | 21.305 [541.2] | .965 [24.5] | .625 [15.9] | .625 [15.9] |

**Series JP03-2000, JP04-2000, JP09-2000, JP010-2000**

DIMENSIONS ARE FOR REFERENCE ONLY Inch (mm)


® Registered trademark of Switchcraft, Inc.
Note: Contact your Switchcraft Representative for price and delivery

* Please visit the product pages on our website for the most up-to-date product information

## LONG FRAME (1/4") MODULAR TWIN ROW JACK PANELS (continued)

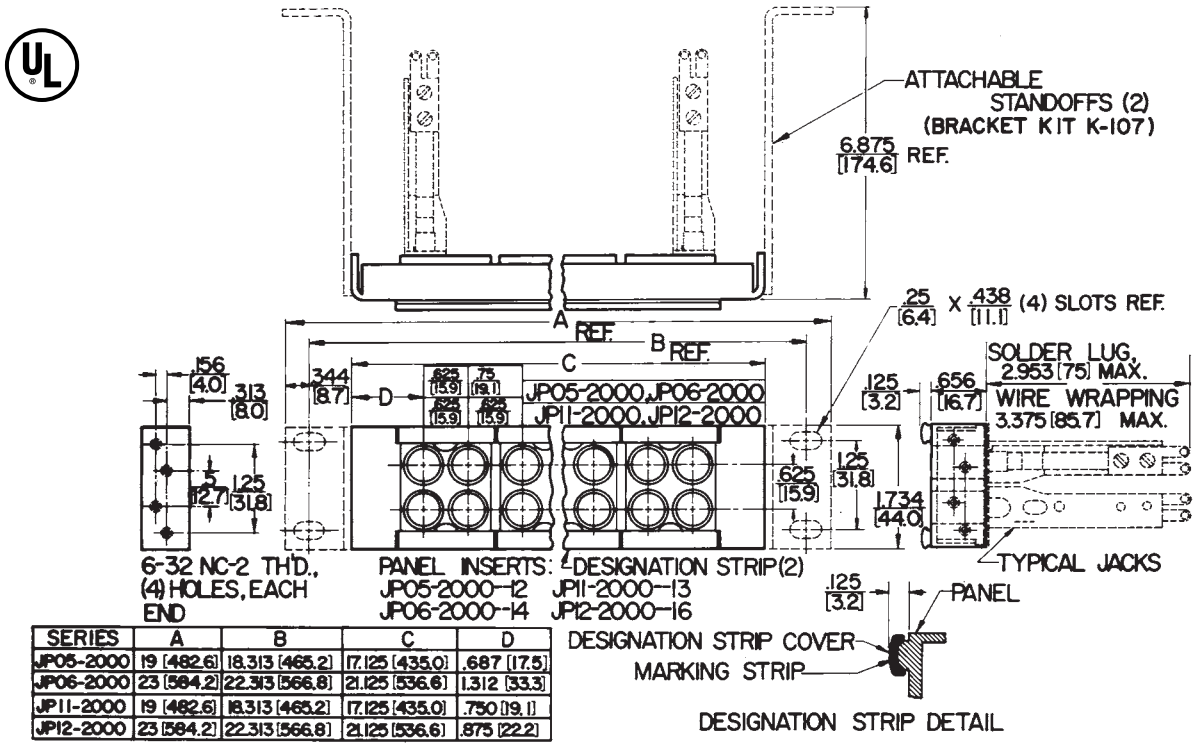


| SERIES | A | B | C | D |
|---|---|---|---|---|
| JP05-2000 | 19 [482.6] | 18.313 [465.2] | 17.125 [435.0] | .687 [17.5] |
| JP06-2000 | 23 [584.2] | 22.313 [566.8] | 21.125 [536.6] | 1.312 [33.3] |
| JP11-2000 | 19 [482.6] | 18.313 [465.2] | 17.125 [435.0] | .750 [19.1] |
| JP12-2000 | 23 [584.2] | 22.313 [566.8] | 21.125 [536.6] | .875 [22.2] |

**Series JP052000, JP062000, JP112000, JP122000**

DIMENSIONS ARE FOR REFERENCE ONLY Inch (mm)

* Please visit the product pages on our website for the most up-to-date product information

# LONG FRAME (1/4") MODULAR 3 ROW JACK PANELS

Four series of cross-connect jack panels are available in 19" and 23" widths. Individual modules are easily dismounted from the front. On special order, panels can be supplied with a variety of standard telephone jacks.

## SERIES JP312000 AND JPD312000

2.655" x 19" size for console, rack or control panel mounting. Mounts 24 twin jacks and 24 single jacks. Openings are on .625" centers in each row. A twin plug fits jacks horizontally or vertically in same quad. Bottom row has 24 single jacks. Two Kwik®-Change designation strips are supplied. Series JPD31 has pre-drilled and countersunk holes for mounting vertical designation strips. See “ORDERING”.

## SERIES JP322000 AND JPD322000

Same as JP312000 and JPD312000, except 23" wide (includes 14 inserts which accommodate 28 twin jacks and 28 single jacks).

## MODULE INSERTS

Available with 6 holes or blank faces. See “ORDERING” for colored modules.

## ORDERING

Order basic assemblies by part number from table. On special order, various combinations of colored inserts mounted in basic panels, as well as many types of complete assemblies are possible. Provide complete details with your inquiry or order.

Standard mount panels are available with holes pre-drilled for vertical designation strips, Series DS320. Add prefix “D” to part number (JPD312000, JPD322000, etc.). Refer to “DESIGNATION STRIPS”.

**Mounting Screws:** #6-32 **P10725** for jack mounting and #4-40 **P2435** for insert mounting can also be ordered separately. Contact Switchcraft.

## SPECIFICATIONS

**Panel and Designation Strips:** Aluminum alloy, extruded. Black anodized per MIL-A-8625.
**Module Insert:** Molded plastic, matte finish. Black standard; white, red, green, blue or yellow available on special order.
**Marking Strip:** White matte finish plastic.
**Designation Strip Cover:** Extruded clear plastic.
**Screws:** #6-32 x 5/16" PHMS, for jack mounting; #4-40 x 1/2" phillips FHMS, for module insert mounting.

| Part Number | Description |
|---|---|
| **JP312000** | 19" wide x 2.625" high panel with 12 black modules installed. Two, full width Kwik® -Change designation strips are included. |
| **JPD312000** | Same as JP312000, except holes pre-drilled for mounting vertical designation strips at each side. |
| **JP322000** | 23" wide x 2.625" high panel with 14 black modules installed. Two, full width Kwik® -Change designation strips are included. |
| **JPD322000** | Same as JP322000, except holes pre-drilled for mounting vertical designation strips at each side. |

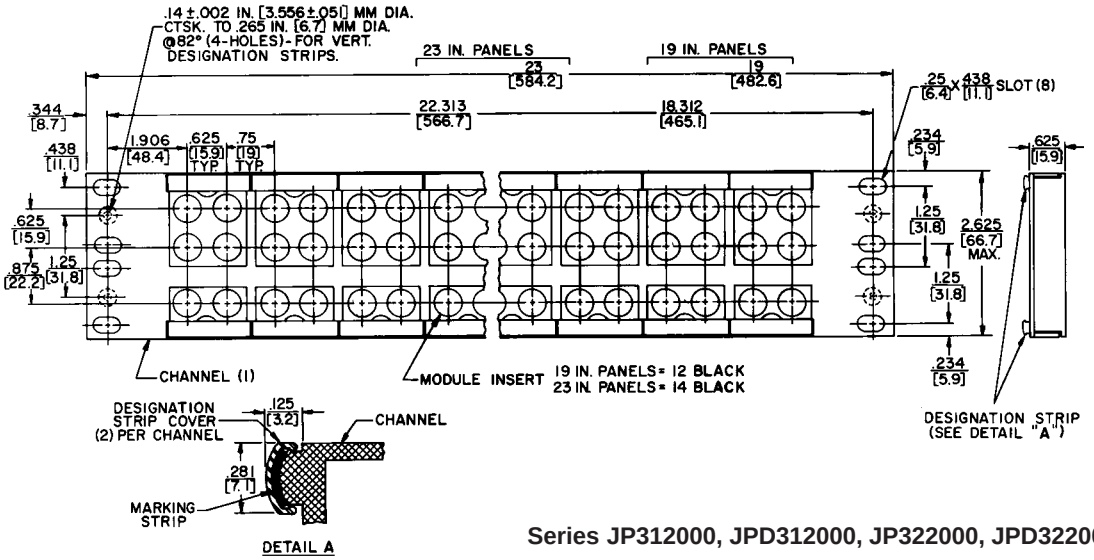


**Series JP312000, JPD312000, JP322000, JPD322000**

DIMENSIONS ARE FOR REFERENCE ONLY Inch (mm)



® Registered trademark of Switchcraft, Inc.
Note: Contact your Switchcraft Representative for price and delivery

* Please visit the product pages on our website for the most up-to-date product information

# TT-JAX® (.173") JACK PANELS SERIES 1600, A1600, B1600, C1600

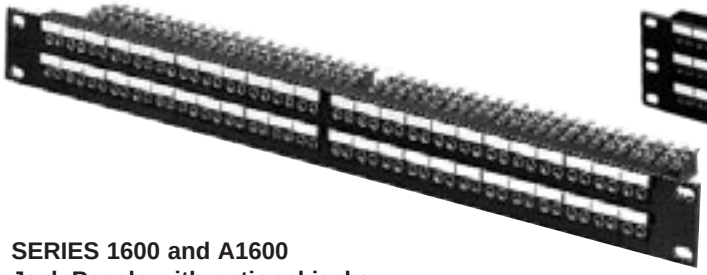

**SERIES 1600 and A1600**
**Jack Panels with optional jacks.**
(See next page for specific part numbers.)

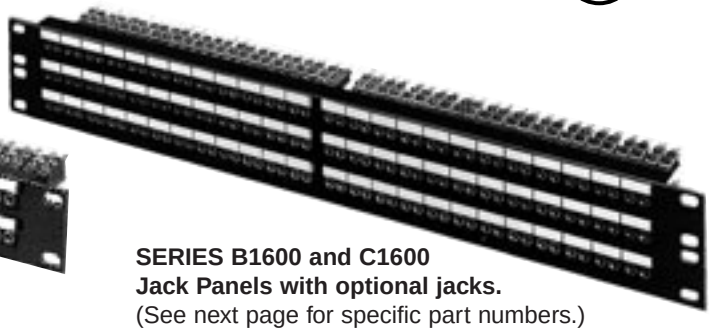

**SERIES B1600 and C1600**
**Jack Panels with optional jacks.**
(See next page for specific part numbers.)

**SERIES 1700**
**Jack Panel**
**with optional jacks.**
(See next page for specific part numbers.)

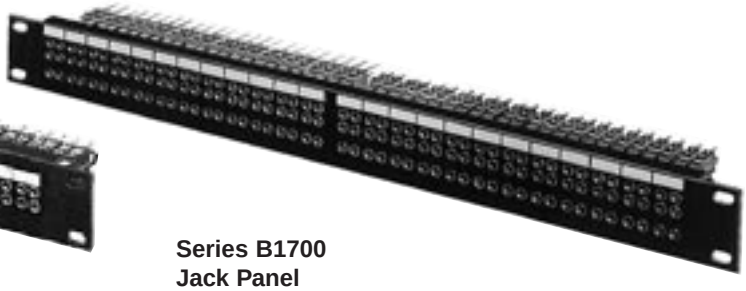

**Series B1700**
**Jack Panel**
**with optional jacks.**
(See next page for specific part numbers.)

## SERIES 1600 DOUBLE ROW JACK PANELS

Black anodized panel has four inserts (24 single jacks). Double row configuration accommodates 96 total jacks (48 pairs). Jack spacing eliminates cross-patching of adjacent circuits when twin plugs are used. Panel size: 1.75" x 19". Four, Kwik-Change® designation strips for circuit identification supplied.

## SERIES A1600 DOUBLE ROW JACK PANELS

Similar to Series 1600, except mounts 104 jacks. Jacks are spaced on .312" centers for maximum jack density. Four, Kwik-Change® designation strips supplied.

## SERIES B1600 THREE ROW JACK PANELS

2.625" x 19" panel size yields high density (144 jacks). Jacks are paired for single or twin plugs without cross-patching. Six, Kwik-Change® designation strips supplied.

## SERIES C1600 THREE ROW JACK PANELS

Similar to B1600, except maximum jack density (156 jacks). Six, Kwik-Change® designation strips supplied.

## SERIES 1700 TWIN ROW JACK PANELS

Standard 1.75" x 19" panel accepts 48 TT-Twin-Jax® jacks. Two, Kwik-Change® designation strips supplied.

## SERIES B1700 THREE ROW JACK PANELS

Accepts 48 Tri-Jax® with alternate mounting centers to eliminate cross-patching between adjacent circuits. Panel size: 1.75" x 19". Two, Kwik-Change® designation strips supplied.

## SPECIFICATIONS

**SERIES 1600, A1600, B1600, 1700, B1700**

**Panel and Designation Strip:** Aluminum alloy, extruded. Per QQ-A-200/8. Black anodized per MIL-A-8625C. Black thermoplastic UL 94V-0.
**Panel Insert:** Thermoplastic polyester, UL 94V-0.
**Marking Strip:** White matte finish plastic.
**Designation Strip Cover:** Extruded clear plastic.

## ORDERING

1. Part number tables list jack panels with the most commonly used jack circuits. Custom jack panels can be built on special order to OEM requirements. Typical special order features are:
   - Lamp jack with incandescent or LED lamps.
   - Solder lug or wire-wrapping terminals.
   - Pre-printed designation strips.
   - TT-Switch® switches with wide switching selection.
2. Contact Switchcraft for all special order items.

## SPECIFYING NOTE:

Prefix letter "D" on part number indicates panels are drilled for mounting vertical designation strips on both ends. EXAMPLE - D1600, AD1632B, WCD1634B (vertical designation strips not included). Order DS321 for 1.734" high panels; DS350 for 2.069" high panels. See "Designation Strips" section.
The most commonly-used combinations of panels and jacks are listed on following page. 1600, A1600, B1600, C1600 panels can be assembled with many different "bantam type" jacks.

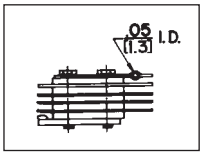


**Bussing type terminals which allow you to buss jacks quickly and easily are available on special order.**

DIMENSIONS ARE FOR REFERENCE ONLY Inch (mm)

* Please visit the product pages on our website for the most up-to-date product information

# TT-JAX® (.173") JACK PANELS – SERIES 1600, A1600, B1600, C1600 (continued)

| Jack Data[1] | | | Panel Data | |
|---|---|---|---|---|

## SERIES 1600 AND A1600

| Part Number | Part Number | Quantity | Dimensions | Mount |
|---|---|---|---|---|
| **1600** | w/o Jacks[1] | 96 | 19" x 1.734" | Standard |
| **D1600** | w/o Jacks[1] | | | |
| **1632A** | TT32A | | | |
| **D1632A** | TT32A | | | |
| **1632B** | TT32B | | | |
| **D1632B** | TT32B | | | |
| **W1632B** | WTT32B | | | |
| **WD1632B** | WTT32B | | | |
| **1634B** | TT34B | | | |
| **D1634B** | TT34B | | | |
| **W1634B** | WTT34B | | | |
| **WD1634B** | WTT34B | | | |
| **A1600** | w/o Jacks[1] | 104 | | |
| **AD1600** | w/o Jacks[1] | | | |
| **A1632B** | TT32B | | | |
| **AD1632B** | TT32B | | | |
| **A1634B** | TT34B | | | |
| **AD1634B** | TT34B | | | |
| **WA1634B** | WTT34B | | | |
| **WAD1634B** | WTT34B | | | |

## SERIES B1600

| Part Number | Part Number | Quantity | Dimensions | Mount |
|---|---|---|---|---|
| **B1600** | w/o Jacks[1] | 144 | 19" x 2.609" | Standard |
| **BD1600** | w/o Jacks[1] | | | |
| **B1632B** | TT32B | | | |
| **BD1632B** | TT32B | | | |
| **B1634B** | TT34B | | | |
| **BD1634B** | TT34B | | | |
| **WBD1634B** | WTT34B | | | |
| **B1650** | Note 2 | | | |
| **BD1650** | Note 2 | | | |
| **WB1650** | Note 3 | | | |
| **WBD1650** | Note 3 | | | |

1. Accepts indicated number of single TT-Jax®, TT-Switches®, TT-Lamp-Jax® or any combination.
2. Three-row panel assembly with 96 TT34B Jax (top 2 rows); and 48 TT32B Jax (bottom row).
3. Same as Note 2 above, except jacks have wire-wrapping terminals.
4. Accepts 48 TT Twin-Jax®.
5. Accepts 48 TT Tri-Jax®.

◊ Special order only; contact Switchcraft.

| Jack Data | | | Panel Data | |
|---|---|---|---|---|

## SERIES C1600

| Part Number | Part Number | Quantity | Dimensions | Mount |
|---|---|---|---|---|
| **C1600** | w/o Jacks[1] | 156 | 19" x 2.609" | Standard |
| **CD1600** | w/o Jacks[1] | | | |
| **C1634B** | TT34B | | | |
| **CD1634B** | TT34B | | | |
| **WC1634B** | WTT34B | | | |
| **WCD1634B** | WTT34B | | | |

## SERIES 1700

| Part Number | Part Number | Quantity | Dimensions | Mount |
|---|---|---|---|---|
| **1700** | w/o Jacks[4] | 48 Twin-Jax® | 19" x 1.734" | Standard |
| **D1700** | w/o Jacks[4] | | | |
| **1789** | TT89 | | | |
| **D1789** | TT89 | | | |
| **W1789** | WTT89 | | | |
| **WD1789** | WTT89 | | | |

## SERIES B1700

| Part Number | Part Number | Quantity | Dimensions | Mount |
|---|---|---|---|---|
| **B1700** | w/o Jacks[5] | 48 Tri-Jax® | 19" x 1.734" | Standard |
| **BD1700** | w/o Jacks[5] | | | |
| **B1795** | TT95 | | | |
| **BD1795** | TT95 | | | |
| **WB1795** | WTT95 | | | |
| **WBD1795** | WTT95 | | | |
| **B1796** | TT96 | | | |
| **BD1796** | TT96 | | | |
| **WB1796** | WTT96 | | | |
| **WBD1796** | WTT96 | | | |

## PANEL INSERTS

| Part Number | Insert Description | For Panels |
|---|---|---|
| **TT505** | Without jacks, 24 holes | A1600, B1600 |
| **◊TT506** | Blank | 1600, B1600, C1600 |
| **◊TT507** | Without jacks, 48 holes | 1700 |
| **◊TT508** | Blank | 1700 |
| **◊TT509** | Without jacks, 26 holes | A1600, C1600 |
| **◊TT511** | Without jacks, 72 holes | B1700 |

DIMENSIONS ARE FOR REFERENCE ONLY Inch (mm)



® Registered trademark of Switchcraft, Inc.
Note: Contact your Switchcraft Representative for price and delivery

* Please visit the product pages on our website for the most up-to-date product information

## TT-JAX® (.173") JACK PANELS –SERIES 1600, A1600, B1600, C1600 (continued)

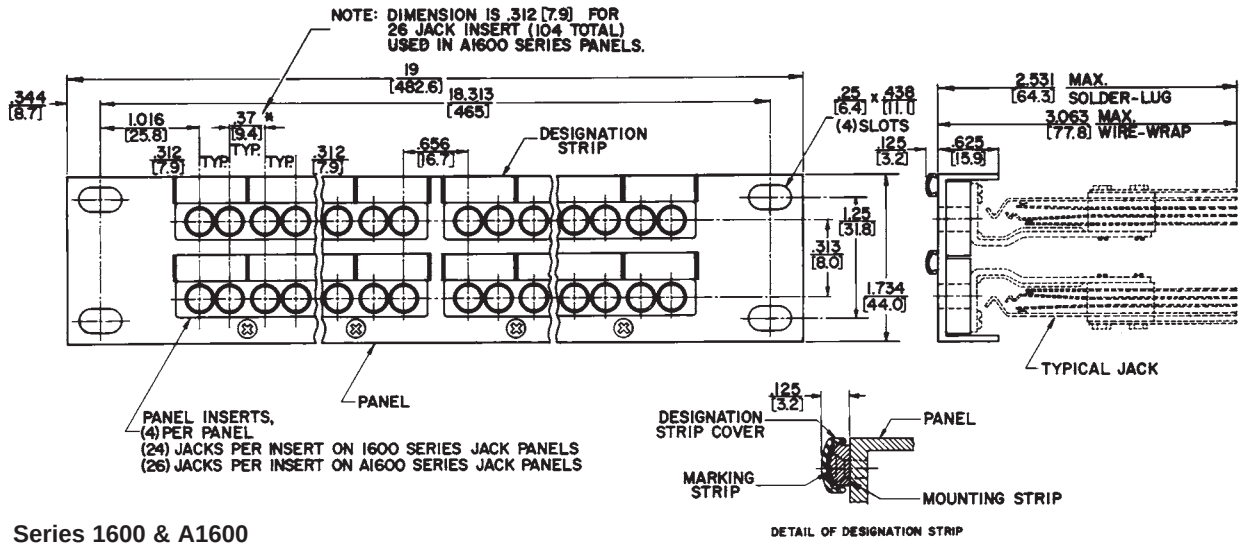


Series 1600 & A1600

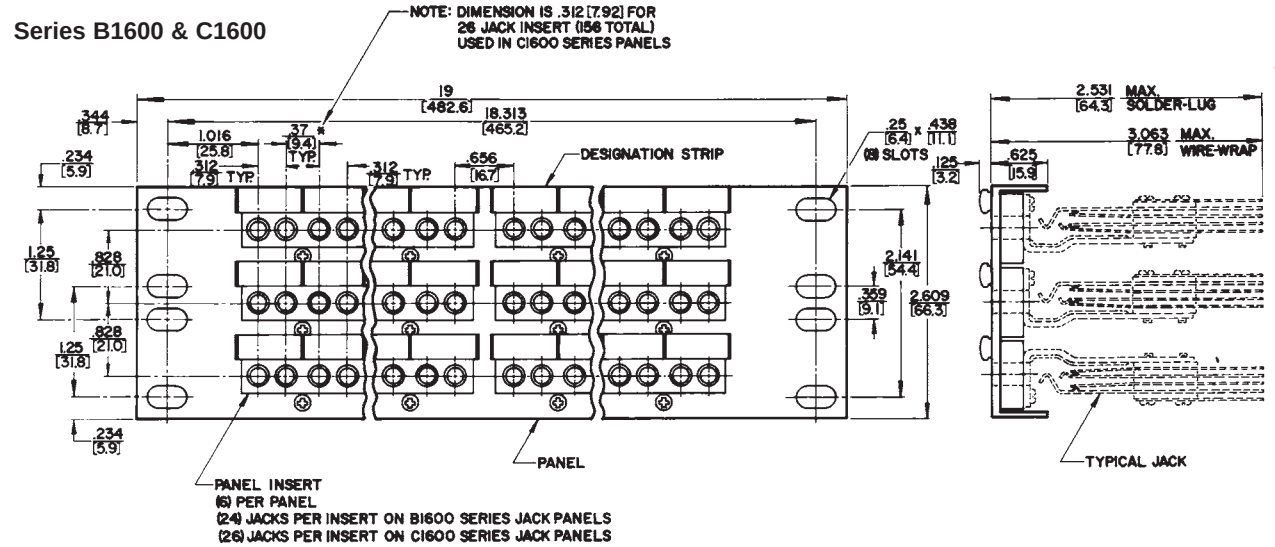


DIMENSIONS ARE FOR REFERENCE ONLY Inch (mm)

* Please visit the product pages on our website for the most up-to-date product information

## TT-JAX® (.173") JACK PANELS – SERIES 1600, A1600, B1600, C1600 (continued)

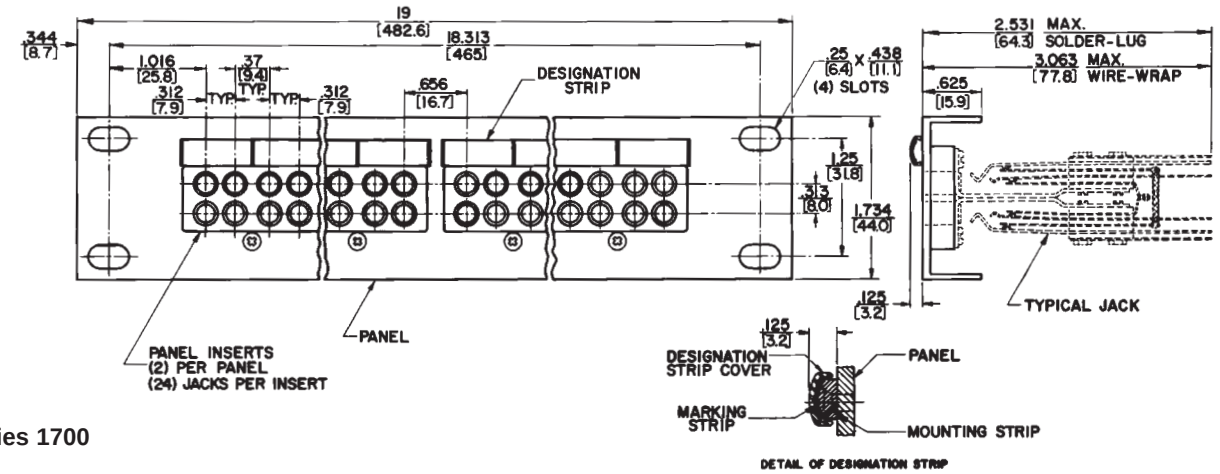


Series 1700

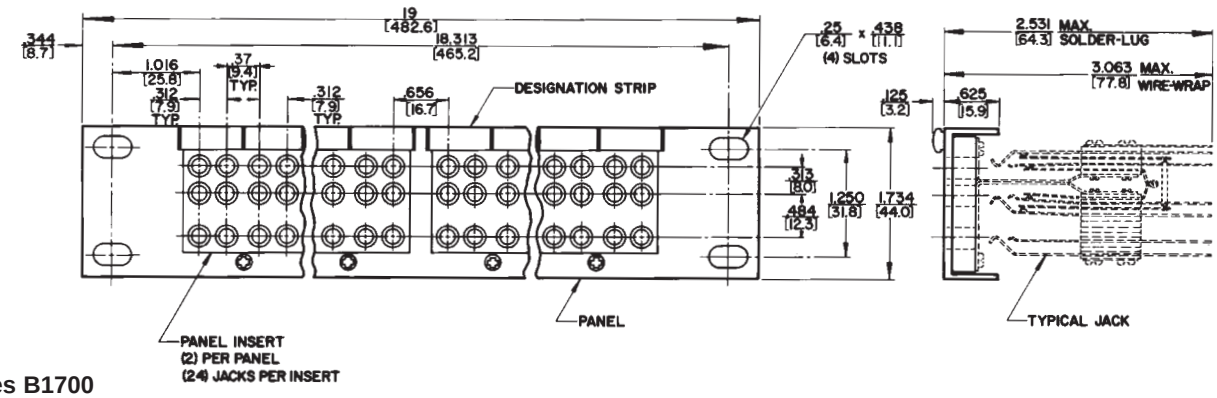


Series B1700

DIMENSIONS ARE FOR REFERENCE ONLY Inch (mm)



® Registered trademark of Switchcraft, Inc.
Note: Contact your Switchcraft Representative for price and delivery

* Please visit the product pages on our website for the most up-to-date product information

# MODULAR TT-JAX® (.173") PANELS - BLANK SERIES TT51, TT53, TT56, TT59

SERIES TT56

SERIES TT51

SERIES TT59

SERIES TT53

Ten series of blank panels are available in 19" and 23" widths, standard or flush mounting, and double, twin or three row configurations. OEM's can order blank components and individual modules, jacks, switches and lamp jacks for production line assembly according to standard or special front panel configurations. Kwik-Change® designation strips are supplied with panels for custom legend marking.
Flush mounting styles can use extension legs (on special order), for stand-off mounting from front of rack. Contact Switchcraft for Mounting Bracket Kit K107.

## SPECIFICATIONS

**Panel and Designation Mounting Strip:** Aluminum alloy, extruded per QQ-A-200/8. Black anodized per MIL-A-8265C.
**Marking Strip:** Matte finish white plastic.
**Designation Strip Cover:** Extruded clear plastic.

**SPECIFYING NOTE:** Part numbers in table are for blank panels only.

## ORDERING

1. Order by part number from table
2. Refer to jack section to specify other jacks and components.

| Series Number[1] | Description[2] |
|---|---|
| TT51 | 19" double row standard mount panel. Mounts 96 single jacks on 24 modules. |
| TT53 | 19" three row standard mount panel. Mounts 48 Tri-Jax® jacks on 24 modules. |
| TT54 | 23" three row standard mount panel. Mounts 56 Tri-Jax® jacks on 28 modules. |
| TT55 | 19" double row flush mount panel. Mounts 96 single jacks on 24 modules. |
| TT56 | 23" double row flush mount panel. Mounts 112 single jacks on 28 modules. |
| TT58 | 23" three row flush mount panel. Mounts 56 Tri-Jax® jacks on 28 modules. |
| TT59 | 19" twin row standard mount panel. Mounts 48 TT Twin-Jax® jacks on 24 modules. |
| TT60 | 23" twin row standard mount panel. Mounts 56 TT Twin-Jax® jacks on 28 modules. |
| TT61 | 19" twin row flush mount panel. Mounts 48 TT Twin-Jax® jacks on 24 modules. |
| TT62 | 23" twin row flush mount panel. Mounts 56 TT Twin-Jax® jacks on 28 modules. |

◊ Special order only. Contact Switchcraft.
1. Prefix TTD for standard mounting panels indicates predrilled holes for mounting "X Wide" vertical designation strips. See "Designation Strips" section.
2. Each panel includes integral designation mounting strip, marking strips and clear plastic covers.
3. Contact Switchcraft for any special order items.

DIMENSIONS ARE FOR REFERENCE ONLY Inch (mm)

* Please visit the product pages on our website for the most up-to-date product information

# TT MODULE INSERTS – SERIES TT91, TT92 AND TT93

**SERIES TT91** **SERIES TT92** **SERIES TT-93**

| TT91402 (black, 4 hole) | TT91202 (black, 2 hole) | TT91002 (black, blank) | TT92402 (black, 4 hole) | TT92202 (black, 2 hole) | TT92002 (black, blank) | TT93602 (black, 6 hole) | TT93302 (black, 3 hole) | TT93002 (black, blank) |
|---|---|---|---|---|---|---|---|---|

Module colors are black or gray (standard); red, green, blue, white and yellow available on special order. Each module has a matte finish front surface and includes two mounting screws (Switchcraft P2348).

## SERIES TT91

Choice of blank, two- or four-hole modules for double row panels Series TT51, TT55 and TT56. The following components are used with Series TT91 modules:

1. Front mount TT-Jax® jacks.
2. Front mount TT-Switch® switches Series TT300FM and WTT420FM.
3. Front mount TT Lamp Jax® lamp jacks TT420FM and WTT420FM.

## SERIES TT92

Blank, two- or four-hole modules for twin row panels Series TT59, TT60, TT61 and TT62. TT Twin-Jax® jacks are used with these modules.

## SERIES TT93

Blank, three- or six-hole modules for three row panels Series TT53, TT54, TT57 and TT58. Tri-Jax® jacks are used with these modules.

## SPECIFICATIONS

**Module:** Precision molded thermosetting plastic in colors.
**Mounting Screws:** Black zinc, #3-48 x .312" flat head machine screws.

## ORDERING

1. Order by part number from tables.
2. Contact Switchcraft for any special order items.

**SPECIFYING NOTE:** The part numbers listed on this page are for modules only. Refer to following page for specifying panel assemblies with components installed.

## SERIES TT91 (For Double Row Panels)

| Color | Openings | | |
|---|---|---|---|
| | 4 | 2 | Blank |
| Red | TT91401 | ◊TT91201 | TT91001 |
| Black | ◊TT91402 | ◊TT91202 | ◊TT91002 |
| Green | TT91403 | ◊TT91203 | TT91003 |
| Blue | TT91404 | ◊TT91204 | TT91004 |
| White | TT91405 | ◊TT91205 | TT91005 |
| Yellow | TT91408 | ◊TT91208 | TT91008 |
| Gray | TT91411 | TT91211 | TT91011 |

## SERIES TT92 (For Twin Row Panels)

| Color | Openings | | |
|---|---|---|---|
| | 4 | 2 | Blank |
| Red | TT92401 | ◊TT92201 | TT92001 |
| Black | ◊TT92402 | TT92202 | ◊TT92002 |
| Green | TT92403 | ◊TT92203 | TT92003 |
| Blue | TT92404 | ◊TT92204 | TT92004 |
| White | TT92405 | ◊TT92205 | TT92005 |
| Yellow | TT92408 | ◊TT92208 | TT92008 |
| Gray | TT92411 | TT92211 | TT92011 |

## SERIES TT93 (For Three Row Panels)

| Color | Openings | | |
|---|---|---|---|
| | 4 | 2 | Blank |
| Red | TT93601 | ◊TT93301 | TT93001 |
| Black | TT93602 | TT93302 | TT93002 |
| Green | TT93603 | ◊TT93303 | TT93003 |
| Blue | TT93604 | ◊TT93304 | TT93004 |
| White | TT93605 | ◊TT93305 | TT93005 |
| Yellow | TT93608 | ◊TT93308 | TT93008 |
| Gray | TT93611 | TT93311 | TT93011 |

◊ Special order only; contact factory for price and delivery.

DIMENSIONS ARE FOR REFERENCE ONLY Inch (mm)


® Registered trademark of Switchcraft, Inc.
Note: Contact your Switchcraft Representative for price and delivery

* Please visit the product pages on our website for the most up-to-date product information

# MODULAR TT-JAX® (.173") JACK PANELS – SERIES TT5102000, TT5202000, TT5502000, TT5602000

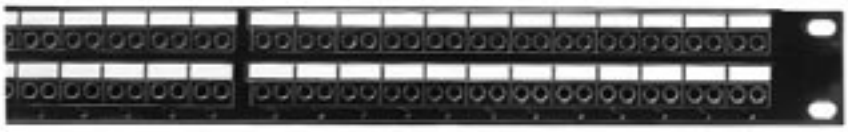

**Series TT5102000, TT5202000 (Typical)**

**Series TT5502000, TT5602000 (Typical) Shown w/mounting bracket K107 (not supplied).**

## SERIES TT5102000*

Modular double row, 1.75" high x 19" wide, standard mount. Supplied with 24 black modules, designation strips, and covers. Mounts 96 TT-Jax® single jacks, lamp jacks and/or switches.

## SERIES TT51020001*

Modular double row, 1.75" high x 19" wide, standard mount. Supplied with 24 black modules, designation strips, and covers. Mounts 96 TT-Jax® single jacks, lamp jacks and/or switches. Comes supplied with cable tie bar.

## SERIES TT5202000*

Similar to TT5102000, except 23" wide. Supplied with 28 black modules, designation strips, and covers. Mounts 112 TT-Jax® single jacks, jack lamps and/or switches.

## SERIES TT5502000

Modular double row, 1.75" high x 19" wide, flush mount. Supplied with 24 black modules, designation strips, and covers. Panels can be mounted flush with rack/control panel surface, or use with extension legs for standoff mounting with easy access to rear of jacks for testing/monitoring. Mounts 96 TT-Jax® single jacks, lamp jacks and/or switches.

## SERIES TT5602000

Similar to TT5502000, except 23" wide. Supplied with 28 black modules, designation strips, and covers. Mounts 112 TT-Jax® single jacks, jack lamps and/or switches.

## ORDERING

1. Order part number from table
2. Contact Switchcraft for any special order items.
3. Separate components can be ordered.

* Prefix TTD indicates panel is pre-drilled with countersunk holes for mounting "X-Wide" vertical designation strips. See "DESIGNATION STRIPS" section.

| | Jack Data | | Panel Data | | |
|---|---|---|---|---|---|
| **Part Number** | **Part Number** | **Qty.** | **Width** | **Mount** | **Modules** |
| **TT5102000** | without jacks | 0 | 19" | Stan-dard | 24 (Black) |
| **◊TT5102S31**<br>**◊TT5102W31**<br>**TT5102S32A**<br>**TT5102W32A**<br>**TT5102S32B**[2]<br>**TT5102W32B**<br>**◊TT5102S33B**<br>**◊TT5102W33B**<br>**TT5102S34B**[2]<br>**TT5102W34B** | TT31FM<br>WTT31FM<br>TT32AFM<br>WTT32AFM<br>TT32BFM<br>WTT32BFM<br>TT33BFM<br>WTT33BFM<br>TT34BFM<br>WTT34BFM | 96 | | | |
| **TTD5102000** | without jacks | 0 | | | |
| **TTD5102S31 Through TTD5102W34B** | Note[1] | 96 | | | |
| **TT5202000**<br>**TTD5202000** | without jacks | 0 | 23" | Stan-dard | 28 (Black) |
| **TT5202S31 Through TT5202W34B** | Note[1] | 112 | | | |
| **TTD520231 Through TTD5202W34B** | Note[1] | | | | |
| **TT552000** | without jacks | 0 | 19" | Flush | 24 (Black) |
| **TT5502S31 Through TT5502W34B** | Note[1] | 96 | | | |
| **TT5602000** | without jacks | 0 | 23" | Flush | 28 (Black) |
| **TT5602S31 Through TT5602W34B** | Note[1] | 112 | | | |

◊ Special order only; contact Switchcraft for price and delivery.
1 Complete panel part number with jacks installed can be constructed as shown for Series TT51.
2. Add a "1" to part number to specify cable tie bar.

DIMENSIONS ARE FOR REFERENCE ONLY Inch (mm)

* Please visit the product pages on our website for the most up-to-date product information

# MODULAR TT-JAX® (.173") JACK PANELS – SERIES TT5102000, TT5202000, TT5502000, TT56020000 (continued)

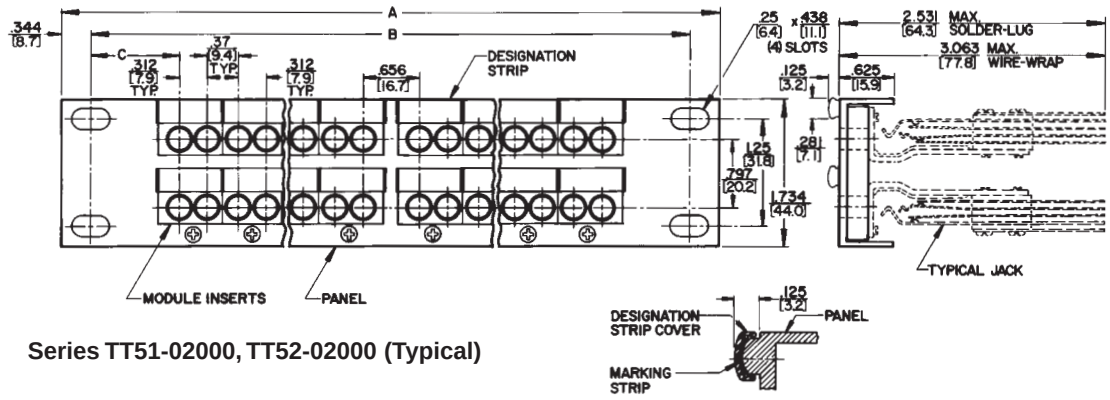


Series TT51-02000, TT52-02000 (Typical)

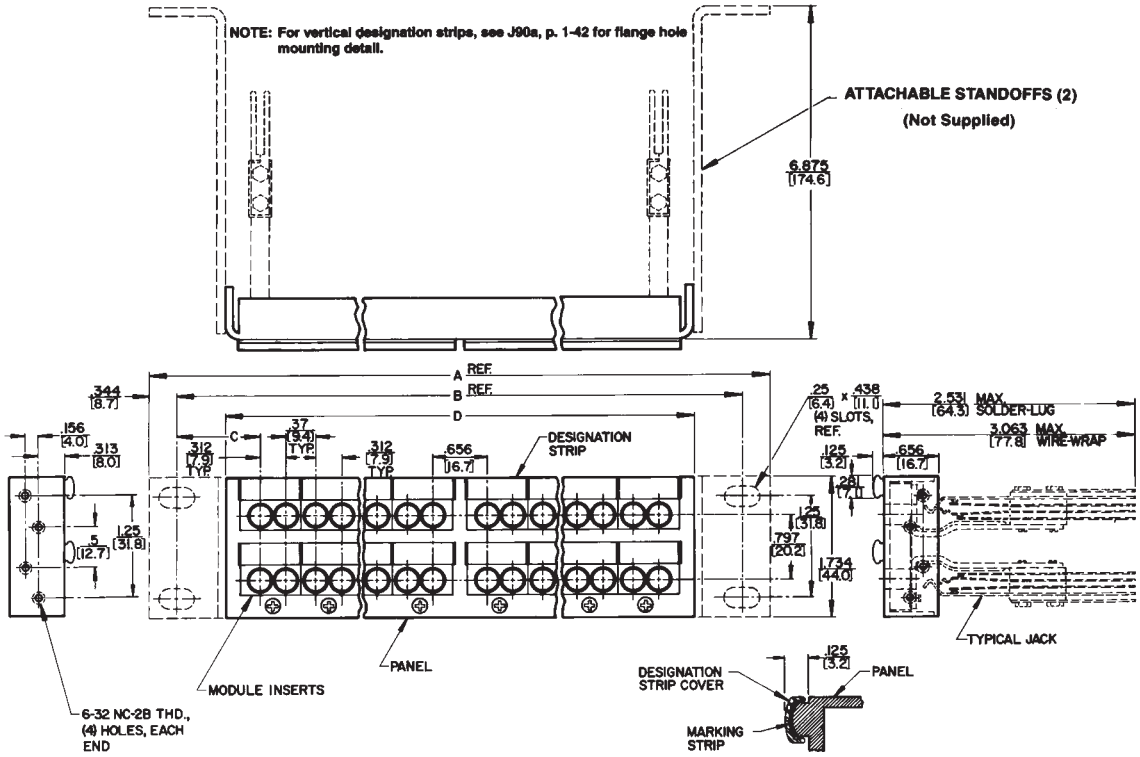


Series TT55-02000, TT56-02000 (Typical)

| Jack Panel Dimensions - inch (mm) | | | | |
|---|---|---|---|---|
| Series Number | A | B | C | D |
| TT51 | 19 (482.6) | 18.3 (465.1) | 1.013 (25.7) | - |
| ◊TT52 | 23 (584.2) | 22.3 (566.7) | 1.648 (41.9) | - |
| TT55 | 19 (482.6) | 18.3 (465.1) | 1.013 (25.7) | 17.125 (435) |
| TT56 | 23 (584.2) | 22.3 (566.7) | 1.648 (41.9) | 21.125 (536.6) |

◊ Special order only; contact Switchcraft for price and delivery.

DIMENSIONS ARE FOR REFERENCE ONLY Inch / (mm)


® Registered trademark of Switchcraft, Inc.
Note: Contact your Switchcraft Representative for price and delivery

* Please visit the product pages on our website for the most up-to-date product information

# TT-JAX® (.173") TWIN ROW AND THREE ROW JACK PANELS

**Series TT5902000**

**Series TT6102000**

**Series TT5302000, TT5402000 (Typical)**

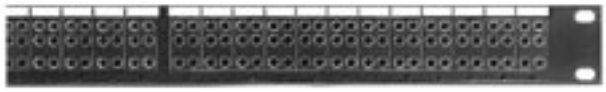

## SERIES TT5902000*

Modular twin row, 1.75" high x 19" wide, standard mount. Supplied with 24 black modules, designation strips, and covers. Mounts 48 TT Twin-Jax® twin jacks.

## SERIES TT6002000*

Similar to TT5902000, except 23" wide. Supplied with 28 black modules, designation strips, and covers. Mounts 56 TT Twin-Jax® twin jacks.

## SERIES TT6102000

Modular twin row, 1.75" high x 19" wide, flush or standoff mount. Supplied with 24 black modules, designation strips, and covers. Mounts 48 TT Twin-Jax® twin jacks.

## SERIES TT6202000

Similar to TT6102000, except 23" wide. Supplied with 28 black modules, designation strips, and covers. Mounts 56 TT Twin-Jax® twin jacks.

## SERIES TT5302000*

Modular three row, 1.75" high x 19" wide, standard mount. Supplied with 24 black modules, designation strips, and covers. Designed for LINE, EQUIP and MONITOR patch connections. Mounts 48 Tri-Jax® triple jacks.

## SERIES TT5402000*

Similar to TT5302000, except 23" wide. Supplied with 28 black modules, designation strips, and covers. Mounts 56 Tri-Jax® triple jacks.

## SERIES TT5702000

Modular three row, 1.75" high x 19" wide, flush or standoff mount. Supplied with 24 black modules, designation strips, and covers. Mounts 48 Tri-Jax® triple jacks.

## SERIES TT5802000

Similar to TT5702000, except 23" wide. Supplied with 28 black modules, designation strips, and covers. Mounts 56 Tri-Jax® triple jacks.

## ORDERING

1. Order part number from table
2. Contact Switchcraft for any special order items.

*Prefix TTD indicates panel is pre-drilled with countersunk holes for mounting "X-Wide" vertical designation strips. See **"DESIGNATION STRIPS"** section.

| Part Number | Jack Data | | Panel Data | | |
|---|---|---|---|---|---|
| | Part Number | Qty. | Width | Mount | Modules |
| TT5902000 | without jacks | 0 | 19" | Stan-dard | 24 (Black) |
| TT5902S89 | TT89FM | 48 | | | |
| TT5902W89 | WTT89FM | | | | |
| TTD5902000 | without jacks | 0 | | | |
| TTD5902S89 | TT89FM | 48 | | | |
| TTD5902W89 | WTT89FM | | | | |
| TT6002000<br>TTD6002000 | without jacks | 0 | 23" | | |
| TT6002S89<br>TT6002W89 | Note[1] | 56 | | | |
| TTD6002S89<br>TTD6002W89 | Note[1] | 56 | | | |
| TT6102000 | None | 0 | 19" | Flush | 28 (Black) |
| TT6102S89<br>TT6102W89 | Note[1] | 48 | | | |
| TT6202000 | without jacks | 0 | 23" | | |
| TT6202S89<br>TT6202W89 | Note[1] | 56 | | | |
| TT5302000 | without jacks | 0 | 19" | Stan-dard | 24 (Black) |
| ◊TT5302S95 | TT95FM | 48 | | | |
| TT5302W95 | WTT95FM | | | | |
| ◊TT5302S96 | TT96FM | | | | |
| TT5302W96 | WTT96FM | | | | |
| TTD5302000 | without jacks | 0 | | | |
| TTD5302S95<br>Through<br>TTD5302W96 | Note[2] | 48 | | | |
| TT5402000<br>TTD5402000 | without jacks | 0 | 23" | Stan-dard | 28 (Black) |
| TT5402S95<br>Through<br>TT5402W96 | Note[2] | 56 | | | |
| TTD5402S95<br>Through<br>TTD5402W96 | Note[2] | | | | |
| TT5702000 | without jacks | 0 | 19" | Flush | 24 (Black) |
| TT5702S95<br>Through<br>TT5702W96 | Note[2] | 48 | | | |
| TT5802000 | without jacks | 0 | 23" | Flush | 28 (Black) |
| TT5802S95<br>Through<br>TT5802W96 | Note[2] | 56 | | | |

◊ Special order only; contact Switchcraft for price and delivery.
1. Complete panel part number with jacks installed can be constructed as shown for Series TT59 or TTD59.
2. Complete panel part number with jacks installed can be constructed as shown for series TT53.

DIMENSIONS ARE FOR REFERENCE ONLY Inch (mm)

* Please visit the product pages on our website for the most up-to-date product information

## TT-JAX® (.173") TWIN ROW AND THREE ROW JACK PANELS (continued)

Series TT5902000 and TT6002000 (Typical)

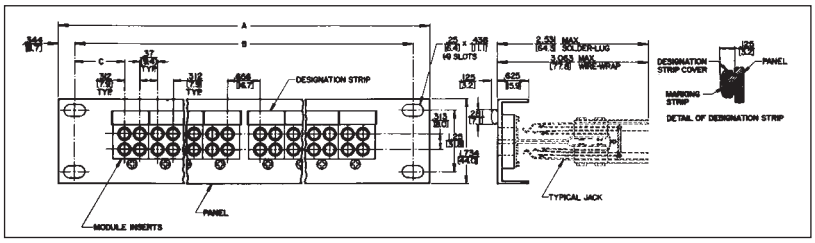


| Jack Panel Dimensions - inch (mm) | | | | |
|---|---|---|---|---|
| Series Number | A | B | C | D |
| TT59 | 19 (482.6) | 18.3 (465.1) | 1.013 (25.7) | - |
| TT60 | 23 (584.2) | 22.3 (566.7) | 1.648 (41.9) | - |
| TT61 | 19 (482.6) | 22.3 (566.7) | 1.013 (25.7) | 17.125 (435) |
| TT62 | 23 (584.2) | 22.3 (566.7) | 1.648 (41.9) | 21.125 (536.6) |

Series TT6102000 and TT6202000 (Typical)

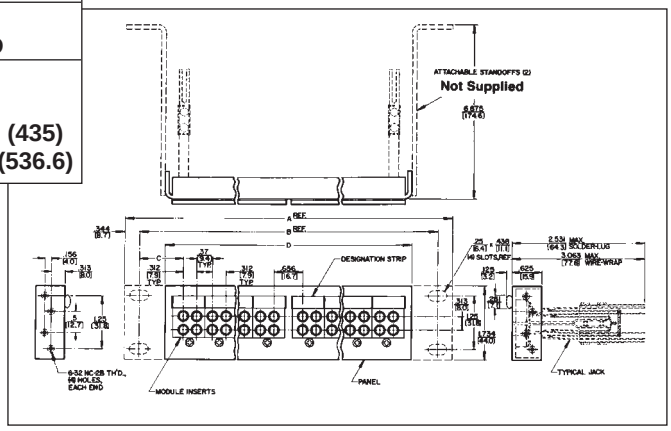


Series TT5302000 and TT5402000 (Typical)

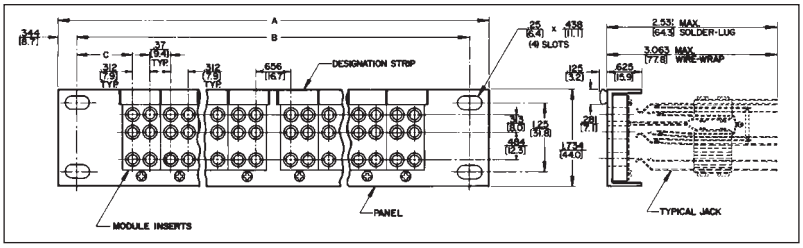


| Jack Panel Dimensions - inch (mm) | | | | |
|---|---|---|---|---|
| Series Number | A | B | C | D |
| TT53 | 19 (482.6) | 18.3 (465.1) | 1.013 (25.7) | - |
| TT54 | 23 (584.2) | 22.3 (566.7) | 1.648 (41.9) | - |
| TT57 | 19 (482.6) | 22.3 (566.7) | 1.013 (25.7) | 17.125 (435) |
| ◊TT58 | 23 (584.2) | 22.3 (566.7) | 1.648 (41.9) | 21.125 (536.6) |

Series TT5702000 and TT5802000 (Typical)

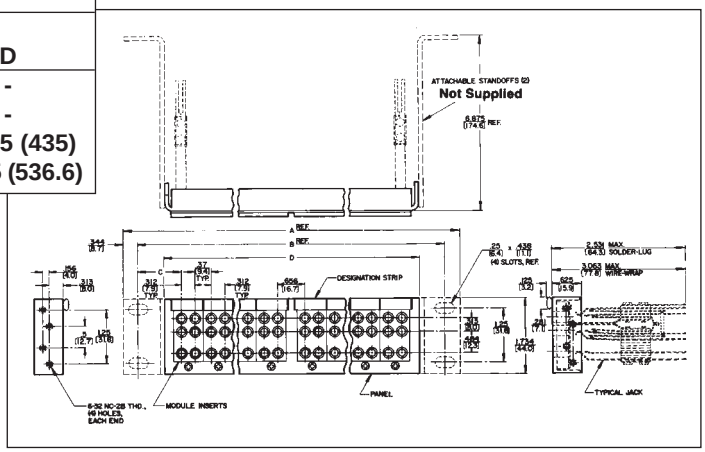


DIMENSIONS ARE FOR REFERENCE ONLY Inch / (mm)



® Registered trademark of Switchcraft, Inc.
Note: Contact your Switchcraft Representative for price and delivery

* Please visit the product pages on our website for the most up-to-date product information

# TT-JAX® (.173") CONNECTORIZED JACKFIELDS – SERIES TT, 2-WIRE, 4-WIRE, 6-WIRE

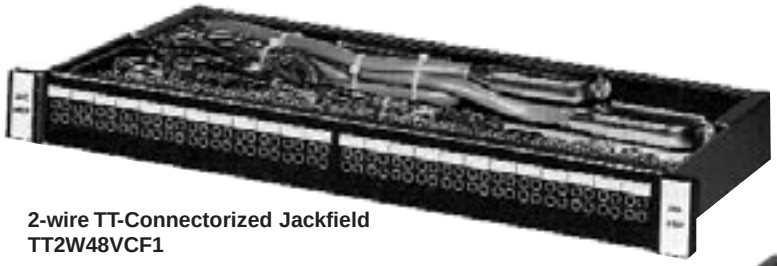

**2-wire TT-Connectorized Jackfield**
**TT2W48VCF1**

**6-wire TT-Connectorized Jackfield**

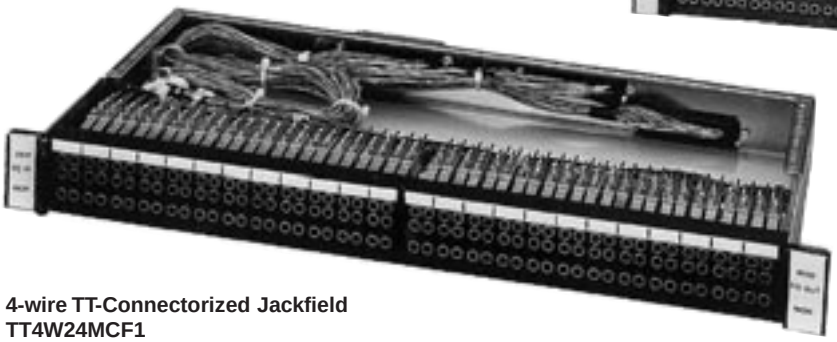

**4-wire TT-Connectorized Jackfield**
**TT4W24MCF1**

## 2-WIRE TT-CONNECTORIZED JACKFIELDS, SERIES TT

Contains 48, 2-wire circuits. Arrangements include: LINE-DROP or Signal E/M, or LINE-DROP-MON. Available with MONITOR jack row. On rear panel, LINE connectors are receptacles and DROP connectors are plugs. LINE and DROP circuits may be isolated from each other for separate monitoring. On special order, 48 circuits LINE/COMBINATION DROP/MON or 96 circuits, LINE/DROP or Signal E/M may be specified.

## 2-WIRE TT-CONNECTORIZED PC JACKFIELD, SERIES TTPC

Same as 2-Wire TT-connectorized jackfields above, except all connections are machine-soldered on a double-sided PC board instead of hand wired.

## 4-WIRE TT-CONNECTORIZED JACKFIELDS, SERIES TT

4-Wire jackfields have 24, 4-wire circuits for MOD-DEM/EQ IN-EQ OUT/MON patching, or may be used for other 4-wire patching applications. Can be supplied with or without MONITOR jack row. On rear panel, MOD AND EQ IN connectors are receptacles and DEM and EQ OUT connectors are plugs.

## 6-WIRE TT-CONNECTORIZED JACKFIELDS, SERIES TT

6-Wire jackfields contain 48, 6-wire circuits for MOD-DEM/EQ IN EQ OUT/MON/SIG LINE/SIG EQ patching with toll test boards. Available with or without MONITOR jack row. On rear panel, MOD, EQ IN and SIG LINE connectors are receptacles and DEM, EQ OUT and SIG EQ connectors are plugs. The following can be specified on special order: 12 circuits, DEM-MOD/EQ IN-EQ OUT/MON/SIG E/M; 48 circuits, signal E/M leads separated; 48 circuits for D3 channel banks.

## ORDERING

1. Order by part number from tables.
2. Contact Switchcraft for any special order items.

DIMENSIONS ARE FOR REFERENCE ONLY Inch (mm)

* Please visit the product pages on our website for the most up-to-date product information

# TT-JAX® (.173") CONNECTORIZED JACKFIELDS – SERIES TT, 2-WIRE, 4-WIRE, 6-WIRE (continued)

## SPECIFICATIONS

**Panel and Integral Designation Strip:** Aluminum alloy, extruded per QQ-A-200/8. Black anodized per MIL-A-8265.
**Modules:** Precision-molded thermosetting plastic. Black standard. Other colors on special order.
**Mounting Screws:** Black zinc, #3-48 x 312" flat head machine screw.
**TT-Jax® Jacks:** See jacks section for TT-Jax® specifications.
**Marking Strip:** Matte finish white plastic.
**Vertical Designation Strip:** Extruded aluminum, black anodized.
**Back Frames:** Cold rolled steel, zinc-plated with iridescent tarnish-resistant finish.
**Screws, Nuts and Lockwashers:** Steel, clear iridite tarnish-resistant finish over zinc-plating.
**Connectors:** 50-pin micro/pierce plugs and receptacles.
**Cable Tie Bar:** Aluminum hexagon alloy. 6061-T6, clear iridite finish per MIL-C-5541 (not hinged versions only).
**Cables:** 25 pair, 24 AWG solid copper wire, tinned and annealed, covered with insulating grade thermoplastic jacket.
**Cable Ties:** Thermoplastic, locking-non-releaseable, 30 pounds minimum loop tensile strength.

**2- & 4-Wire Connectorized Jackfields**
**(4-Wire Style Shown)**

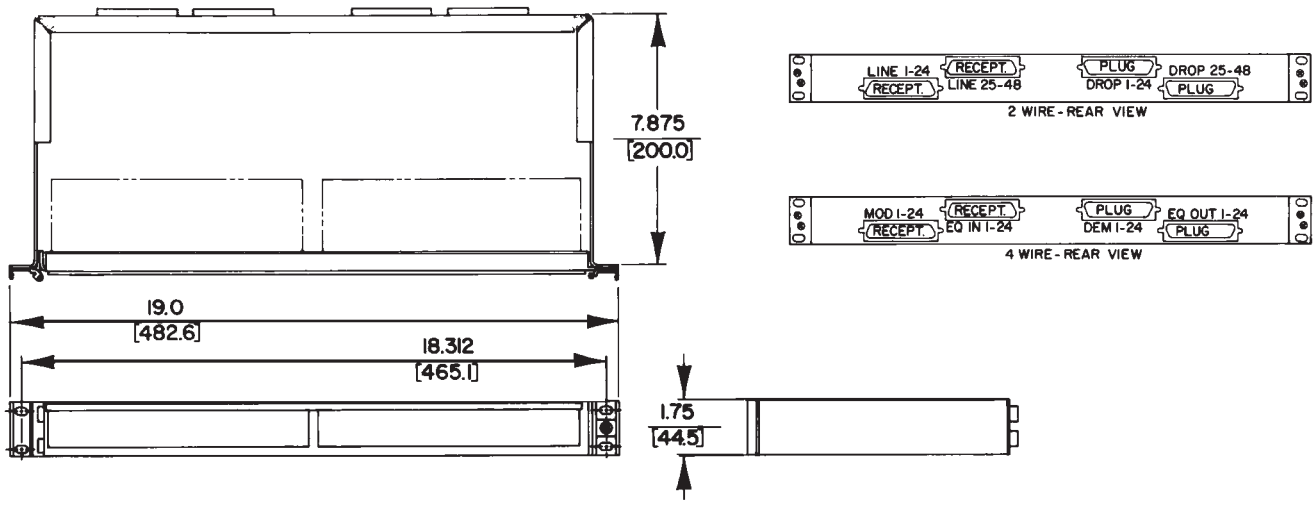


DIMENSIONS ARE FOR REFERENCE ONLY Inch (mm)


® Registered trademark of Switchcraft, Inc.
Note: Contact your Switchcraft Representative for price and delivery

* Please visit the product pages on our website for the most up-to-date product information

## TT-JAX® (.173") CONNECTORIZED JACKFIELDS (continued)

### PART NUMBERS

1. Compose part numbers from data below to specify your jackfield...or use the table to order popular jackfields.

**SPECIFYING NOTE:** Any jackfield can be manufactured with AMP CHAMP connectors. Contact Switchcraft.

T T

**JACK TYPE**
**TT** - .173"
**JP** - LONG FRAME (1/4")

2 W

**UNIT TYPE**
**2W -** 2 WIRE
**4W -** 4 WIRE
**6W -** 6 WIRE

2 4

**NUMBER OF CIRCUITS**
12
24
48
96

V

**MONITOR JACK**
**V** - WITHOUT
**M** - WITH

C

**WIRE TERMINATION**
**C** - AMPHENOL BLUE RIBBON
**B** - AMP CHAMP
**W** - TERMINAL BLOCK

F

**TYPE OF HINGE**
**F** - FRONT PANEL HINGED
**R** - REAR PANEL HINGED
**N** - NON-HINGED

1

**RACK MOUNTING**
**1** - 19 inch
**2** - 23 inch

### TYPICAL PART NUMBERS

| **2-WIRE JACKFIELDS** | |
|---|---|
| **Part Number** | **Description** |
| **TT2W48VCF1** | Hinged front panel. |
| **TT2W48VCN1** | Front panel NOT hinged. |
| **TT2W48MCF1** | Same as TT2W48VCF1, except with MONITOR jack row. |
| **TT2W48MCN1** | Same as TT2W48VCN1, except with MONITOR jack row. |
| **4-WIRE JACKFIELDS** | |
| **Part Number** | **Description** |
| **TT4W24MCF1** | Hinged front panel with MONITOR jack row. |
| **TT4W24MCN1** | Front panel NOT hinged with MONITOR jack row. |
| **TT4W24VCF1** | Same as TT4W24MCF1, except no MONITOR jack row. |
| **TT4W24VCN1** | Same as TT4W24MCN1, except no MONITOR jack row. |
| **6-WIRE JACKFIELDS** | |
| **Part Number** | **Description** |
| **TT6W48MCF1** | Hinged front panel with MONITOR jack row. |
| **16J1055** | Hinged front panel with MONITOR jack row. |
| **TT6W48MCN1** | Front panel NOT hinged with MONITOR jack row. |
| **TT6W48VCF1** | Same as TT6W48MCF1, except no MONITOR jack row. |
| **TT6W48VCN1** | Same as TT6W48MCN1, except no MONITOR jack row. |

DIMENSIONS ARE FOR REFERENCE ONLY Inch (mm)

* Please visit the product pages on our website for the most up-to-date product information

## TT-JAX® (.173") CONNECTORIZED JACKFIELDS (continued)

### TYPICAL CIRCUIT ARRANGEMENTS - 2-WIRE

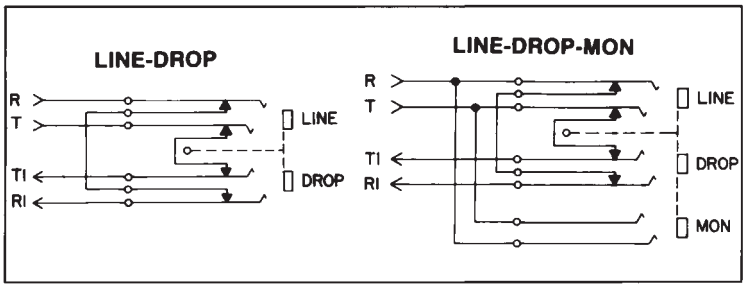


### TYPICAL CIRCUIT ARRANGEMENTS - 4-WIRE

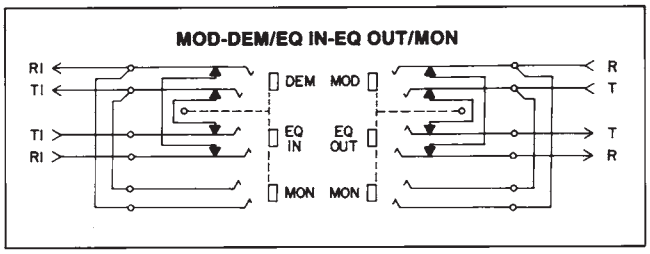


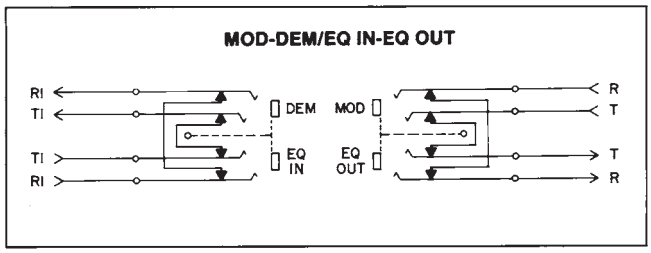


### TYPICAL CIRCUIT ARRANGEMENTS - 6-WIRE

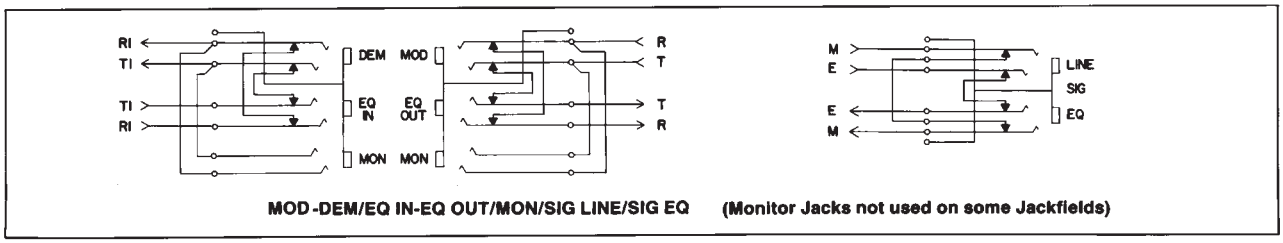


DIMENSIONS ARE FOR REFERENCE ONLY Inch (mm)



® Registered trademark of Switchcraft, Inc.
Note: Contact your Switchcraft Representative for price and delivery

* Please visit the product pages on our website for the most up-to-date product information

## TT-JAX® (.173") CONNECTORIZED JACKFIELDS (continued)

**No. TT2W48VCF1 (hinged)**
**No. TT2W48VCN1 (not hinged)**
**(Hinged version shown)**

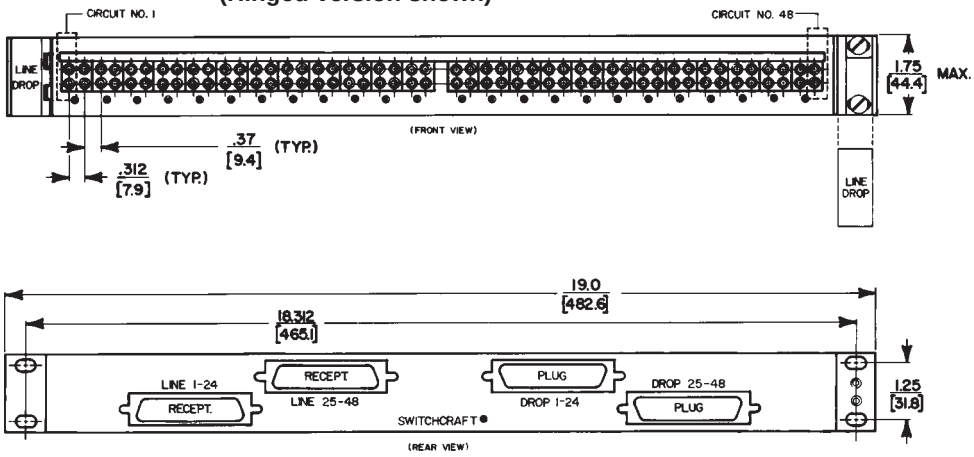


### TYPICAL CIRCUIT ARRANGEMENT

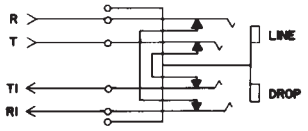


| CONNECTION TABLE | | | | | | | |
|---|---|---|---|---|---|---|---|
| TO PLUG CONNECTOR | | | PIN | | TO RECEPTACLE CONNECTOR | | | PIN |
| CKT. 1 | DROP | TI | 26 | | CKT. 1 | LINE | T | 26 |
| | | RI | 1 | | | | R | 1 |
| REPEATED | | | | | REPEATED | | | |
| CKT. 24 | DROP | TI | 49 | | CKT. 24 | LINE | T | 49 |
| | | RI | 24 | | | | R | 24 |
| CKT. 25 | DROP | TI | 26 | | CKT. 25 | LINE | T | 26 |
| | | RI | 1 | | | | R | 1 |
| REPEATED | | | | | REPEATED | | | |
| CKT. 48 | DROP | TI | 49 | | CKT. 48 | LINE | T | 49 |
| | | RI | 24 | | | | R | 24 |

**No. TT2W48MCF1 (hinged)**
**No. TT2W48MCN1 (not hinged)**
**(Non-Hinged version shown)**

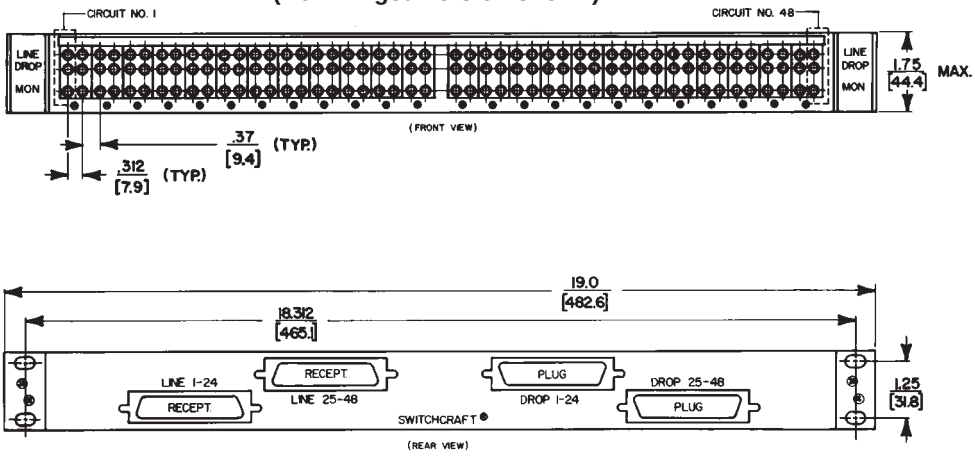


### TYPICAL CIRCUIT ARRANGEMENT

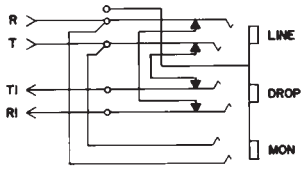


| CONNECTION TABLE | | | | | | | |
|---|---|---|---|---|---|---|---|
| TO PLUG CONNECTOR | | | PIN | | TO RECEPTACLE CONNECTOR | | | PIN |
| CKT. 1 | DROP | TI | 26 | | CKT. 1 | LINE | T | 26 |
| | | RI | 1 | | | | R | 1 |
| REPEATED | | | | | REPEATED | | | |
| CKT. 24 | DROP | TI | 49 | | CKT. 24 | LINE | T | 49 |
| | | RI | 24 | | | | R | 24 |
| CKT. 25 | DROP | TI | 26 | | CKT. 25 | LINE | T | 26 |
| | | RI | 1 | | | | R | 1 |
| REPEATED | | | | | REPEATED | | | |
| CKT. 48 | DROP | TI | 49 | | CKT. 48 | LINE | T | 49 |
| | | RI | 24 | | | | R | 24 |

DIMENSIONS ARE FOR REFERENCE ONLY Inch (mm)

* Please visit the product pages on our website for the most up-to-date product information

## TT-JAX® (.173") CONNECTORIZED JACKFIELDS (continued)

**No. TT4W24VCF1 (hinged)**
**No. TT4W24VCN1 (not hinged)**
**(Hinged version shown)**

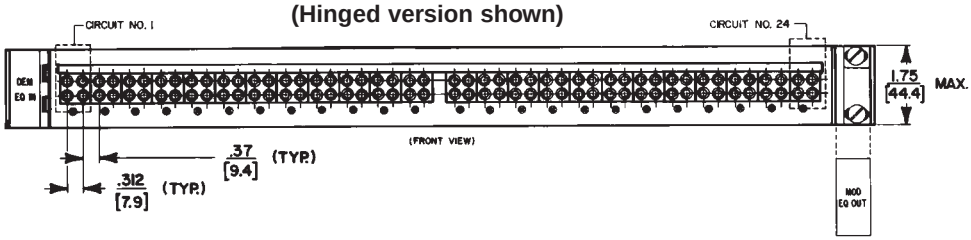


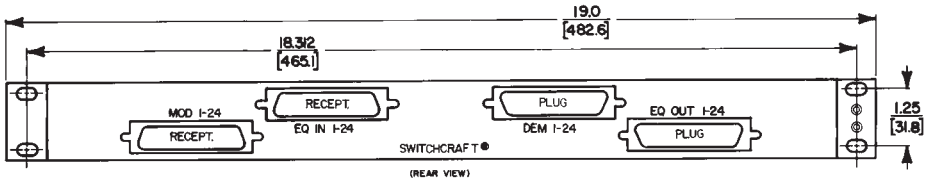


### TYPICAL CIRCUIT ARRANGEMENT

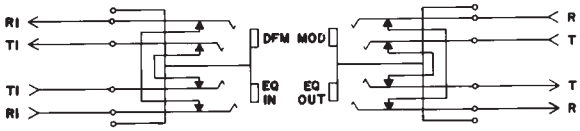


CONNECTION TABLE

| TO PLUG CONNECTOR | | | PIN | TO RECEPTACLE CONNECTOR | | | PIN |
|---|---|---|---|---|---|---|---|
| CKT. 1 | DEM | TI | 26 | CKT. 1 | MOD | T | 26 |
| | | RI | 1 | | | R | 1 |
| REPEATED | | | | REPEATED | | | |
| CKT. 24 | DEM | TI | 49 | CKT. 24 | MOD | T | 49 |
| | | RI | 24 | | | R | 24 |
| CKT. 1 | EQ OUT | T | 26 | CKT. 1 | EQ IN | TI | 26 |
| | | R | 1 | | | RI | 1 |
| REPEATED | | | | REPEATED | | | |
| CKT. 24 | EQ OUT | T | 49 | CKT. 24 | EQ IN | TI | 49 |
| | | R | 24 | | | RI | 24 |

**No. TT4W24MCF1 (hinged)**
**No. TT4W24MCN1 (not hinged)**
**(Non-Hinged version shown)**

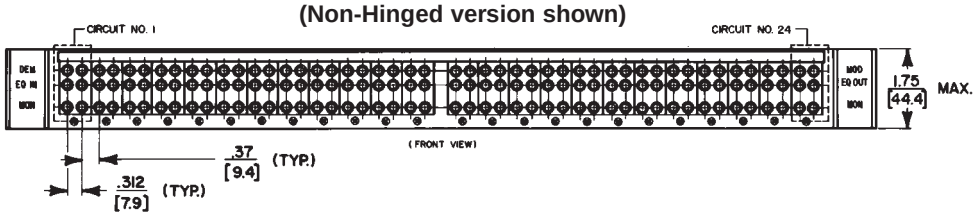


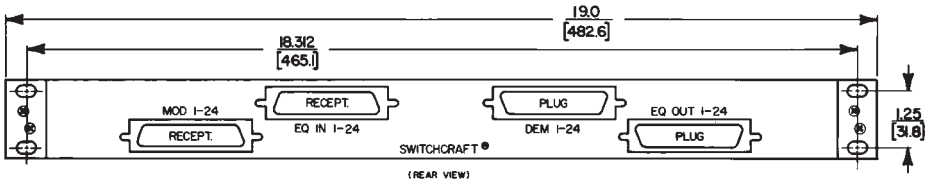


### TYPICAL CIRCUIT ARRANGEMENT

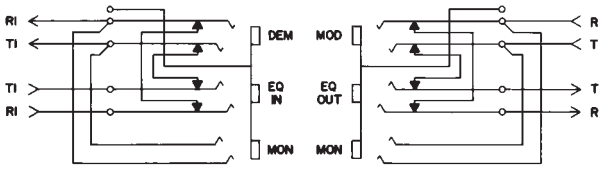


CONNECTION TABLE

| TO PLUG CONNECTOR | | | PIN | TO RECEPTACLE CONNECTOR | | | PIN |
|---|---|---|---|---|---|---|---|
| CKT. 1 | DEM. | TI | 26 | CKT. 1 | MOD. | T | 26 |
| | | RI | 1 | | | R | 1 |
| REPEATED | | | | REPEATED | | | |
| CKT. 24 | DEM. | TI | 49 | CKT. 24 | MOD. | T | 49 |
| | | RI | 24 | | | R | 24 |
| CKT. 1 | EQ. OUT | T | 26 | CKT. 1 | EQ. IN | TI | 26 |
| | | R | 1 | | | RI | 1 |
| REPEATED | | | | REPEATED | | | |
| CKT. 24 | EQ. OUT | T | 49 | CKT. 24 | EQ. IN | TI | 49 |
| | | R | 24 | | | RI | 24 |

DIMENSIONS ARE FOR REFERENCE ONLY Inch (mm)


® Registered trademark of Switchcraft, Inc.
Note: Contact your Switchcraft Representative for price and delivery

* Please visit the product pages on our website for the most up-to-date product information

## TT-JAX® (.173") CONNECTORIZED JACKFIELDS (continued)

**No. TT6W48MCF1 (hinged)**
**No. TT6W48MCN1 (not hinged)**
**(Hinged version shown)**

**No. TT6W48VCF1 (hinged)**
**No. TT6W48VCN1 (not hinged)**

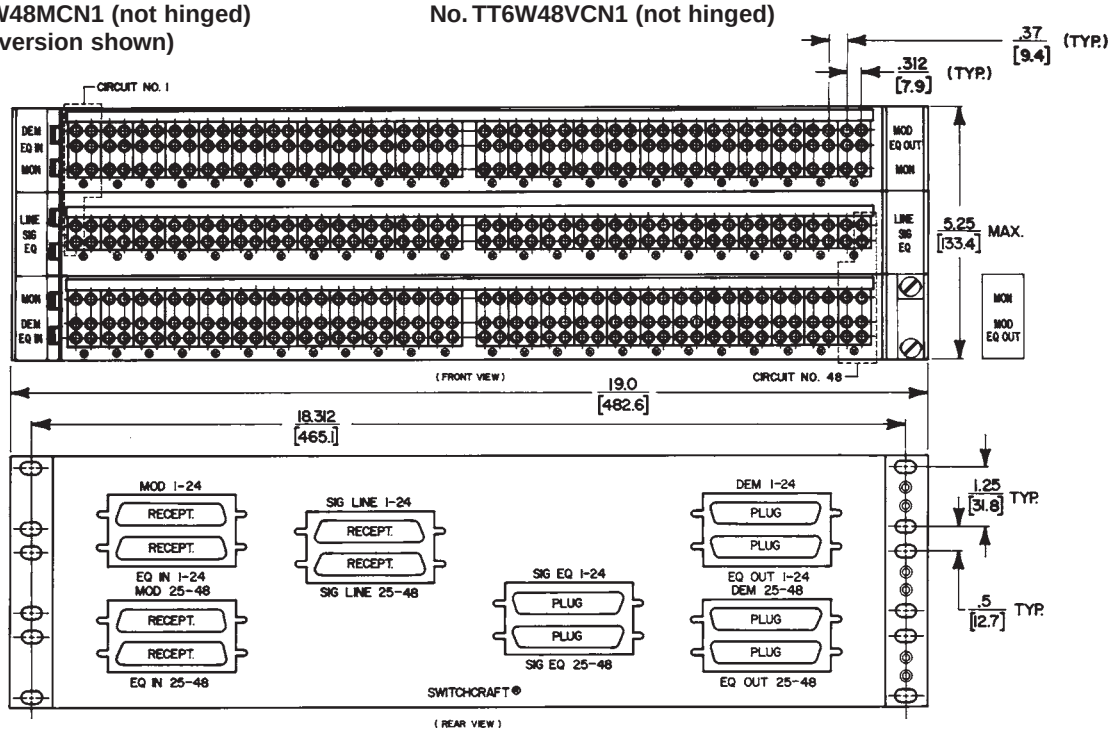


### TYPICAL CIRCUIT ARRANGEMENT

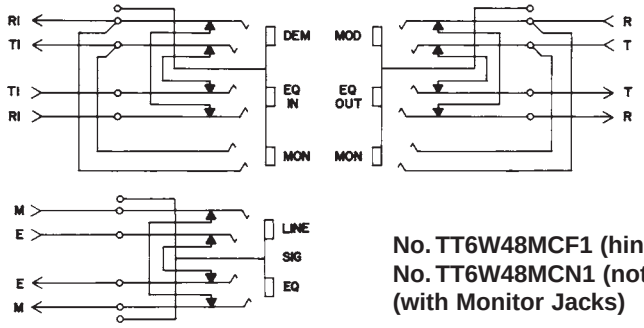


**No. TT6W48MCF1 (hinged)**
**No. TT6W48MCN1 (not hinged)**
**(with Monitor Jacks)**

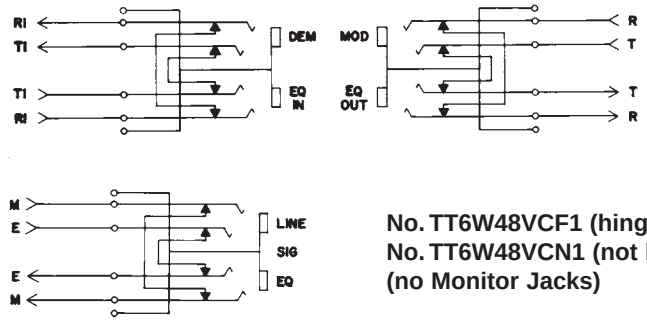


**No. TT6W48VCF1 (hinged)**
**No. TT6W48VCN1 (not hinged)**
**(no Monitor Jacks)**

CONNECTION TABLE

| TO PLUG CONNECTOR | | PIN | | TO RECEPTACLE CONNECTOR | | PIN |
|---|---|---|---|---|---|---|
| CKT. 1 | DEM. | TI | 26 | CKT. 1 | MOD. | T | 26 |
| | | RI | 1 | | | R | 1 |
| REPEATED | | | | REPEATED | | | |
| CKT. 24 | DEM. | TI | 49 | CKT. 24 | MOD. | T | 49 |
| | | RI | 24 | | | R | 24 |
| CKT. 25 | DEM. | TI | 26 | CKT. 25 | MOD. | T | 26 |
| | | RI | 1 | | | R | 1 |
| REPEATED | | | | REPEATED | | | |
| CKT. 48 | DEM. | TI | 49 | CKT. 48 | MOD. | T | 49 |
| | | RI | 24 | | | R | 24 |
| CKT. 1 | EQ. OUT | T | 26 | CKT. 1 | EQ. IN | TI | 26 |
| | | R | 1 | | | RI | 1 |
| REPEATED | | | | REPEATED | | | |
| CKT. 24 | EQ. OUT | T | 49 | CKT. 24 | EQ. IN | TI | 49 |
| | | R | 24 | | | RI | 24 |
| CKT. 25 | EQ. OUT | T | 26 | CKT. 25 | EQ. IN | TI | 26 |
| | | R | 1 | | | RI | 1 |
| REPEATED | | | | REPEATED | | | |
| CKT. 48 | EQ. OUT | T | 49 | CKT. 48 | EQ. IN | TI | 49 |
| | | R | 24 | | | RI | 24 |
| CKT. 1 | SIG. EQ. | E | 26 | CKT. 1 | SIG. LINE | E | 26 |
| | | M | 1 | | | M | 1 |
| REPEATED | | | | REPEATED | | | |
| CKT. 24 | SIG. EQ | E | 49 | CKT. 24 | SIG. LINE | E | 49 |
| | | M | 24 | | | M | 24 |
| CKT. 25 | SIG. EQ | E | 26 | CKT. 25 | SIG. LINE | E | 26 |
| | | M | 1 | | | M | 1 |
| REPEATED | | | | REPEATED | | | |
| CKT. 48 | SIG. EQ. | E | 49 | CKT. 48 | SIG. LINE | E | 49 |
| | | M | 24 | | | M | 24 |

DIMENSIONS ARE FOR REFERENCE ONLY Inch (mm)

* Please visit the product pages on our website for the most up-to-date product information

# TT-JAX® (.173") CONNECTORIZED JACKFIELDS

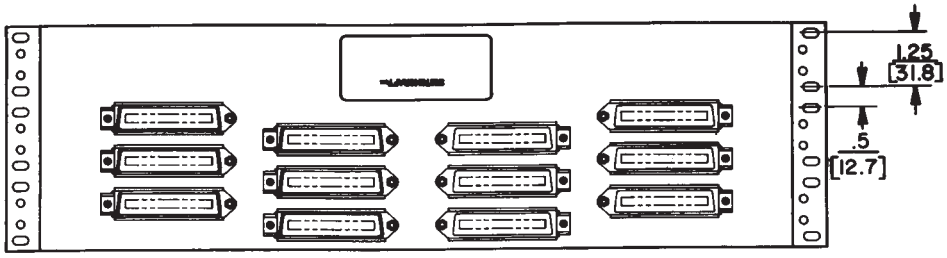


REAR VIEW —ROTATED

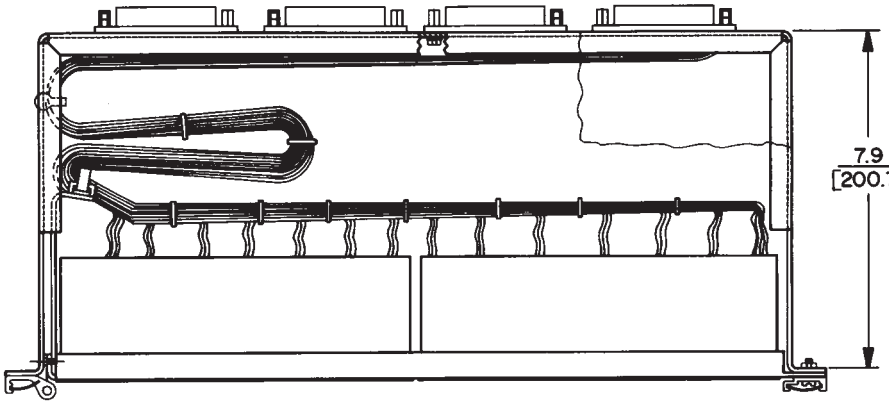


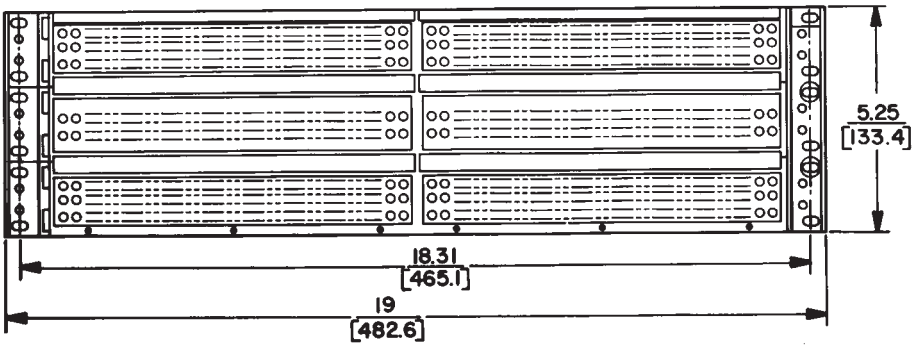


No. 16J-1055

## TYPICAL CIRCUIT ARRANGEMENTS

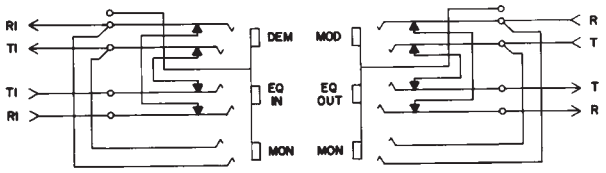


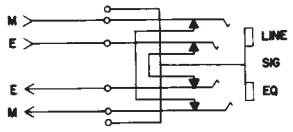


CONNECTION TABLE

| TO PLUG CONNECTOR | | | PIN | TO RECEPTACLE CONNECTOR | | | PIN |
|---|---|---|---|---|---|---|---|
| CKT. 1 | DEM. | TI | 26 | CKT. 1 | MOD. | T | 26 |
| | | RI | 1 | | | R | 1 |
| REPEATED | | | | REPEATED | | | |
| CKT. 24 | DEM. | TI | 49 | CKT. 24 | MOD. | T | 49 |
| | | RI | 24 | | | R | 24 |
| CKT. 25 | DEM. | TI | 26 | CKT. 25 | MOD. | T | 26 |
| | | RI | 1 | | | R | 1 |
| REPEATED | | | | REPEATED | | | |
| CKT. 48 | DEM | TI | 49 | CKT. 48 | MOD | T | 49 |
| | | RI | 24 | | | R | 24 |
| CKT. 1 | EQ. OUT | T | 26 | CKT. 1 | EQ. IN | TI | 26 |
| | | R | 1 | | | RI | 1 |
| REPEATED | | | | REPEATED | | | |
| CKT. 24 | EQ. OUT | T | 49 | CKT. 24 | EQ. IN | TI | 49 |
| | | R | 24 | | | RI | 24 |
| CKT. 25 | EQ. OUT | T | 26 | CKT. 25 | EQ. IN | TI | 26 |
| | | R | 1 | | | RI | 1 |
| REPEATED | | | | REPEATED | | | |
| CKT. 48 | EQ. OUT | T | 49 | CKT. 48 | EQ. IN | TI | 49 |
| | | R | 24 | | | RI | 24 |
| CKT. 1 | SIG. EQ. | E | 26 | CKT. 1 | SIG. LINE | E | 26 |
| | | M | 1 | | | M | 1 |
| REPEATED | | | | REPEATED | | | |
| CKT. 24 | SIG. EQ | E | 49 | CKT. 24 | SIG. LINE | E | 49 |
| | | M | 24 | | | M | 24 |
| CKT. 25 | SIG. EQ | E | 26 | CKT. 25 | SIG. LINE | E | 26 |
| | | M | 1 | | | M | 1 |
| REPEATED | | | | REPEATED | | | |
| CKT. 48 | SIG. EQ. | E | 49 | CKT. 48 | SIG. LINE | E | 49 |
| | | M | 24 | | | M | 24 |

DIMENSIONS ARE FOR REFERENCE ONLY Inch (mm)


® Registered trademark of Switchcraft, Inc.
Note: Contact your Switchcraft Representative for price and delivery

* Please visit the product pages on our website for the most up-to-date product information

# TT-Jax® (.173") CONNECTORIZED JACKFIELDS

## TYPICAL SERIES TTPC 6-WIRE JACKFIELD DIMENSIONS

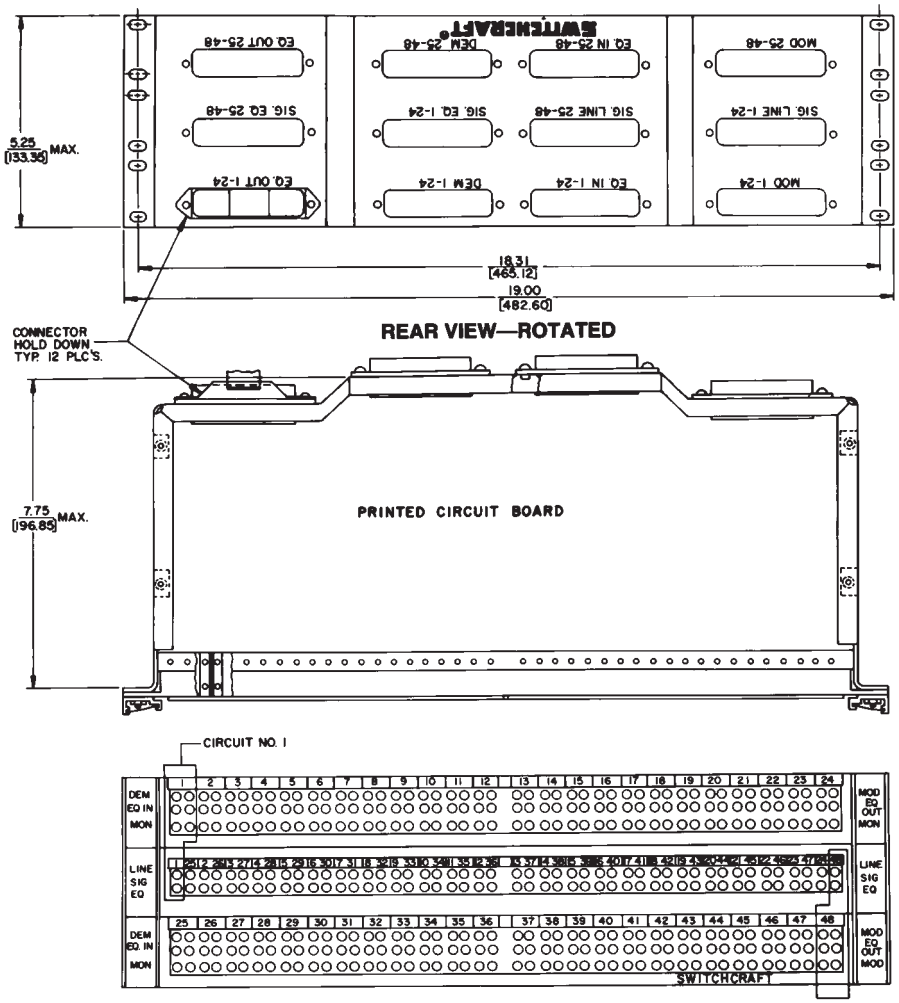


**CONNECTION TABLE**

| TO PLUG CONNECTOR | | | PIN |
|---|---|---|---|
| CKT. 1 | DEM | T1 | 26 |
| | | R1 | 1 |
| REPEATED | | | |
| CKT. 24 | DEM | T1 | 49 |
| | | R1 | 24 |
| CKT. 25 | DEM | T1 | 26 |
| | | R1 | 1 |
| REPEATED | | | |
| CKT. 48 | DEM | T1 | 49 |
| | | R1 | 24 |
| CKT. 1 | EQ OUT | T | 26 |
| | | R | 1 |
| REPEATED | | | |
| CKT. 24 | EQ OUT | T | 49 |
| | | R | 24 |
| CKT. 25 | EQ OUT | T | 26 |
| | | R | 1 |
| REPEATED | | | |
| CKT. 48 | EQ OUT | T | 49 |
| | | R | 24 |
| CKT. 1 | SIG EQ | E | 26 |
| | | M | 1 |
| REPEATED | | | |
| CKT. 24 | SIG EQ | E | 49 |
| | | M | 24 |
| CKT. 25 | SIG EQ | E | 26 |
| | | M | 1 |
| REPEATED | | | |
| CKT. 48 | SIG EQ | E | 49 |
| | | M | 24 |

| TO RECEPTACLE CONNECTOR | | | PIN |
|---|---|---|---|
| CKT. 1 | MOD | T | 26 |
| | | R | 1 |
| REPEATED | | | |
| CKT. 24 | MOD | T | 49 |
| | | R | 24 |
| CKT. 25 | MOD | T | 26 |
| | | R | 1 |
| REPEATED | | | |
| CKT. 48 | MOD | T | 49 |
| | | R | 24 |
| CKT. 1 | EQ IN. | T1 | 26 |
| | | R1 | 1 |
| REPEATED | | | |
| CKT. 24 | EQ IN. | T1 | 49 |
| | | R1 | 24 |
| CKT. 25 | EQ IN | T1 | 26 |
| | | R1 | 1 |
| REPEATED | | | |
| CKT. 48 | EQ IN | T1 | 49 |
| | | R1 | 24 |
| CKT. 1 | SIG LINE | E | 26 |
| | | M | 1 |
| REPEATED | | | |
| CKT. 24 | SIG LINE | E | 49 |
| | | M | 24 |
| CKT. 25 | SIG LINE | E | 26 |
| | | M | 1 |
| REPEATED | | | |
| CKT. 48 | SIG LINE | E | 49 |
| | | M | 24 |

DIMENSIONS ARE FOR REFERENCE ONLY Inch / (mm)

* Please visit the product pages on our website for the most up-to-date product information

# TT® LAMPS AND JEWEL ASSEMBLIES

Steady "On" Lamp
Series TT450

Blinking/Steady
"On" Lamp

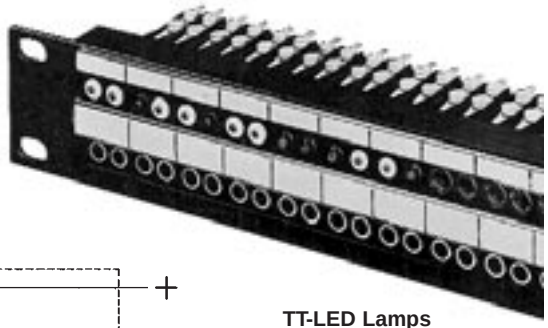

TT-LED Lamps
Installed

## SERIES TT-450 LAMPS

Red LED and series dropping resistor are molded into compact cartridge with bi-pin terminals for use with TT Lamp-Jax® lamp jacks. Colored bezels are molded in for color coding of functions; colors are black, red, green, white and yellow. On special order, blue or other colors are available.

Standard voltages are 6, 24 and 48 V (DC only). No tools are required for lamping/relamping. Simply slip TT-LED into lamp jack with (+) terminal up. If it doesn't light, remove it, rotate it 180°, and reinsert it into jack.

## SPECIFICATIONS

**Housing:** Molded black plastic.
**Bezel:** Molded plastic in colors.
**LED:** Red illumination.
**Pins:** T-1 3/4 bi-pin configuration.

| Part Number | Voltage | Bezel Color | Part Number | Voltage | Bezel Color |
|---|---|---|---|---|---|
| TT45106 | 6 | Red | ◊TT45406 | 6 | Blue |
| TT45124 | 24 | | ◊TT45424 | 24 | |
| TT45148 | 48 | | ◊TT45448 | 48 | |
| TT45206 | 6 | Black | TT45506 | 6 | White |
| TT45224 | 24 | | TT45524 | 24 | |
| TT45248 | 48 | | TT45548 | 48 | |
| TT45306 | 6 | Green | TT45806 | 6 | Yellow |
| TT45324 | 24 | | TT45824 | 24 | |
| TT45348 | 48 | | TT45848 | 48 | |

## ORDERING

1. Order by part number from table.
2. For special order items, such as other LED colors, voltages, lamps with 25% reduced power consumption, etc., contact Switchcraft.

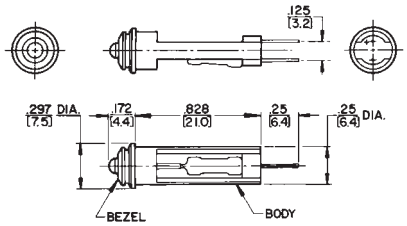


Series TT-450 TT-LED Lamps

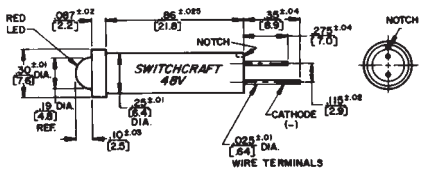


Flashing/Steady "On" Lamps

## SCHEMA

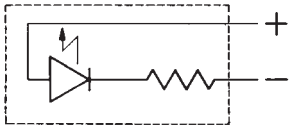


## FLASHING/STEADY ON LEDS

Yellow, green and red LEDs are 2-pin cartridge plug-ins which operate from a 48 VDC supply. When 48 V is applied, LED flashes for 30 seconds, then changes to steady "On" condition.

## SPECIFICATIONS

**Body:** Thermoplastic, UL 94V-0 rated.
**LED Colors:** Yellow, green or red.

| Part Number | Description |
|---|---|
| 15J9068 | Red flashing/continuous |
| 15J9076 | Yellow flashing/continuous |
| 15J9077 | Green flashing/continuous |
| 15J9078 | Amber flashing/continuous |

## TT-JEWEL ASSEMBLY

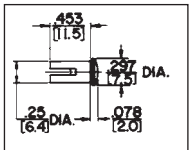


Series TT-400

Panel with TT-Jewel Assemblies
and TT-Switches installed

Jewel assemblies use bi-pin lamp and act as lighted jewel and lamping/relamping tool. Simply slip bi-pin lamp in brass collar and insert lamp with pins in vertical plane. Lamp automatically seats properly. Jewel is molded plastic in colors; sleeve is brass.

| Part Number | Color | Part Number | Color |
|---|---|---|---|
| TT401 | Red | TT408 | Yellow |
| TT403 | Green | TT413 | Amber |
| TT404 | Blue | TT510 | Black* |
| TT405 | White | *Used as hole plug where no jack is installed. | |

## LAMPS

| Part Number | Description |
|---|---|
| P2290 | 6.3 V, GE No. 7377. |
| P2315 | 6.3 V, GE No. 7381. Avg. life: 50K hrs. @ 200 mA. |
| P2316 | 28 V, GE No. 7387. Avg. life: 25K hrs. @ 40 mA. |
| P2456 | 24 V, GE No. 7001. |

DIMENSIONS ARE FOR REFERENCE ONLY Inch (mm)



® Registered trademark of Switchcraft, Inc.
Note: Contact your Switchcraft Representative for price and delivery

* Please visit the product pages on our website for the most up-to-date product information

# LONGFRAME SWITCHBOARD SWITCHES

## SERIES 11000 and 11200

Premium quality, long frame switches, designed especially for jack panel mounted switching. Standard actuations are push-lock/pull-release, 2-position turn button and 3 position turn button. Many contact forms available. Mounts in Switchcraft Jack Panels Series 1200, 1400, 2400, 2600, 2800, modular JP® jack panels, and other standard telephone jack panels. Part numbers in table indicate "A" frame. For same switch with "C" frame, add prefix "C" to part number. Many circuit forms not shown in tables are available on special order. Long leaf springs have no forms at point of flexing, which insures long life. Welded crossbar palladium contacts rated at 2A 200W maximum are standard. Fine silver (for higher currents) or gold alloy (dry circuit to 1A) contacts are available on special order. Contact Switchcraft.

W11012L

11206L

### SPECIFICATIONS

**Frame, Screws and Twin Nut:** Steel, plated.

**Springs, Pressure Plate and Terminals:** Copper alloy. Solder lugs are tin-dipped.

**Contacts:** Welded crossbar palladium are standard. Fine silver or gold alloy are available on special order.

**Insulation:** Rigid plastic. Extruded plastic tubing through stack.

**Knob:** Molded black plastic. Turn-key type faced with white arrow.

**Bushing:** Copper alloy, nickel-plated.

### ORDERING

1. Order by part number from table.
2. For special order items, contact Switchcraft.

| Part Numbers | | Circuit |
|---|---|---|
| Locking | Momentary | |
| **PUSHBUTTONS - SERIES 11000** | | |
| ◊11001L | ◊11001 | 1-A |
| ◊11002L | ◊11002 | 1-B |
| 11003L | 11003 | 1-C |
| ◊W11003L | ◊W11003 | |
| ◊11003DL | ◊11003D | 1-D |
| ◊11004L | ◊11004 | 2-A |
| ◊11005L | ◊11005 | 2-B |
| 11006L | 11006 | 2-C |
| ◊W11006L | ◊W11006 | |
| ◊11006DL | ◊11006D | 2-D |
| ◊11008L | ◊11008 | 4-A |
| ◊11009L | ◊11009 | 3-C |
| ◊11012L | 11012 | 4-C |
| ◊W11012L | ◊W11012 | |
| **TURN BUTTONS - SERIES 11200** | | |
| ◊11201L | ◊11201 | 1-A |
| ◊11202L | ◊11202 | 1-B |
| 11203L | 11203 | 1-C |
| ◊W11203L | ◊W11203 | |
| ◊11203DL | ◊11203D | 1-D |
| ◊11204L | ◊11204 | 2-A |
| ◊11205L | ◊11205 | 2-B |
| 11206L | 11206 | 2-C |
| ◊W11206L | ◊W11206 | |
| ◊11206DL | ◊11206D | 2-D |
| ◊11208L | ◊11208 | 4-A |
| ◊11209L | ◊11209 | 3-C |
| ◊11212L | 11212 | 4-C |
| ◊W11212L | ◊W11212 | |

◊ Special order only; contact Switchcraft.

**Mounting Screws:** #6-32, **P10725**, can be ordered separately. Contact Switchcraft. (Screws not supplied with switches.)

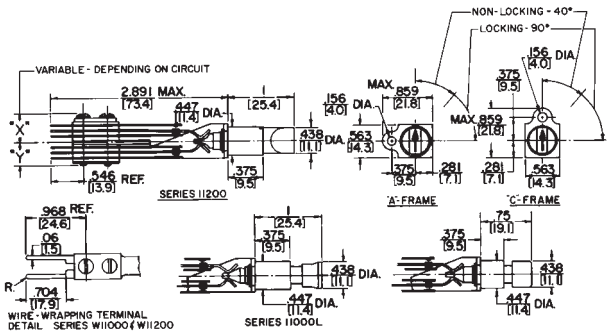


"T-Switch" Switches

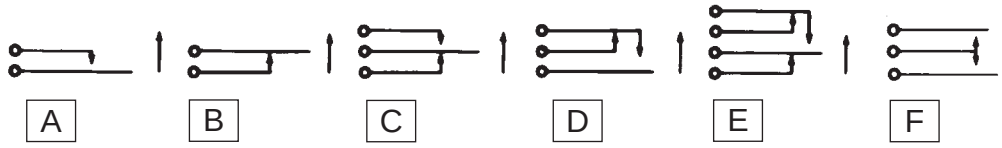


Basic Schematic Circuits

DIMENSIONS ARE FOR REFERENCE ONLY Inch (mm)

* Please visit the product pages on our website for the most up-to-date product information

# DUMMY PLUGS AND HOLE PLUGS

491

492

493

When inserted into a standard size telephone jack, the dummy plug actuates springs like a normal plug, except no signal is conducted through since the plug is made of non-conducting plastic. Dummy plugs can also be used to plug-up unused jacks to prevent accidental insertion of an incorrect plug.

**SERIES 491:** 3-conductor with .206" diameter finger. Mates with MT342B and MT344B MT-Jax®, Series M Hi-D Jax®, and other standard telephone jacks having .21" inside diameter sleeves.

**SERIES 492:** 3-conductor with .25" diameter finger. Mates with 3-conductor MT-Jax® and Series M Hi-D Jax®, and other standard telephone jacks have .25" inside diameter sleeves.

**SERIES 493:** 2-conductor with .25" diameter finger. Mates with 2-conductor MT-Jax®, Series M Hi-D Jax®, and other standard telephone jacks having .25" inside diameter sleeves.

| Part Number | Description | | Interchangeable with | |
|---|---|---|---|---|
| | Conductors | Color | WEco | Trimm |
| **49101** | 3 | Red | – | – |
| **49102** | 3 | Black | – | – |
| **49105** | 3 | White | – | – |
| **49201** | 3 | Red | 258F | 558D |
| **49202** | 3 | Black | 258C | 558C |
| **49205** | 3 | White | 258E | 558E |
| **49301** | 2 | Red | 165F | 556D |
| **49302** | 2 | Black | 165C | 556C |
| **49305** | 2 | White | 165E | – |

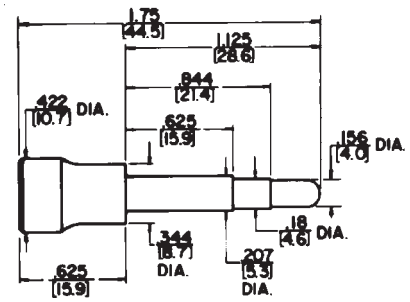


No. 491

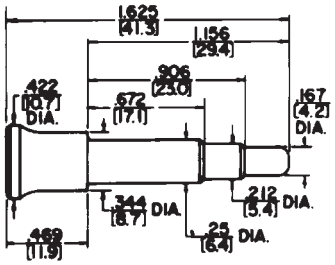


No. 492

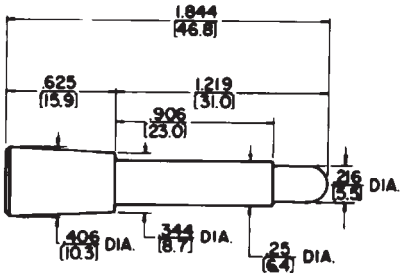


No. 493

## PLASTIC HOLE PLUG
**Hole Plug P1801**

Used to seal off unused holes in jack panels, Series 1200, 1400, 2400, 2600 and JP012000 through JP122000. Constructed of dimensionally stable molded black plastic.

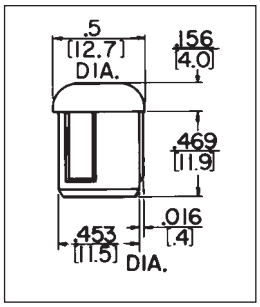


DIMENSIONS ARE FOR REFERENCE ONLY Inch (mm)



® Registered trademark of Switchcraft, Inc.
Note: Contact your Switchcraft Representative for price and delivery

* Please visit the product pages on our website for the most up-to-date product information

# TT® (BANTAM) CIRCUIT GUARD PLUGS

## APPLICATION

Circuit guard plugs snap into TT-Jax® (bantam) jacks eliminating accidental or unauthorized insertion of a plug into a critical circuit. The circuit guards plugs do not actuate the jack springs. These plugs seal the jack bushing and provide an additional means of circuit identification.

Circuit guard plugs are available in three different designs: Series TT512, Series TT513 and Series TT514. All three designs are molded thermoplastic and are available in the following colors: red, black, green, blue, white or yellow.

## SERIES TT512

TT512 circuit guard plugs cover an individual jack opening and insert to an virtually flush position with the front panel.

## SERIES TT513

TT513 circuit guard plugs are similar to the Series TT512 except the button extends .219" from the front of the panel for easier removal.

## SERIES TT514

TT514 circuit guard plugs cover both the IN and OUT jacks of two adjoining circuits while leaving the monitor jacks exposed for circuit testing. The four jack circuit guard plugs also include a matte finish white plastic marking strip and a clear extruded plastic window for additional designation.

## SPECIFICATIONS

**TT512 and TT513:** Molded thermoplastic in colors.
**TT514:** Base: Molded thermoplastic in colors.
**Marking Strip:** Matte finish white plastic.
**Cover:** Clear extruded plastic.

## ORDERING

1. Order by part number from table.
2. Contact Switchcraft for any special order items.

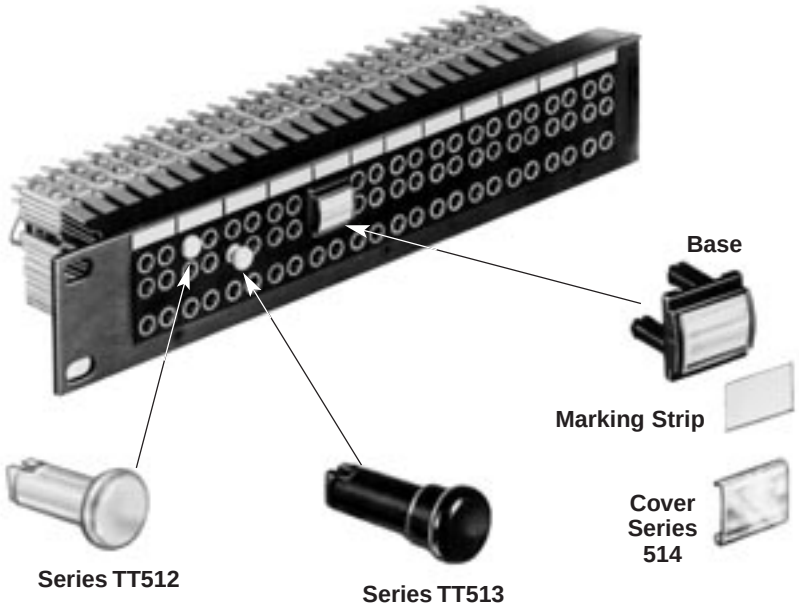


| Part Number | Part Number | Part Number | Color |
|---|---|---|---|
| TT5121 | TT5131 | TT5141* | Red |
| TT5122 | TT5132 | TT5142* | Black |
| TT5123 | TT5133 | TT5143* | Green |
| TT5124 | TT5134 | TT5144* | Blue |
| TT5125 | TT5135 | TT5145* | White |
| TT5128 | TT5138 | TT5148* | Yellow |

*Includes base, marking strip & cover.

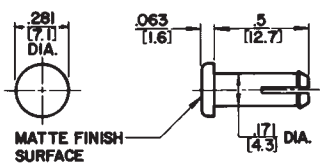


Series TT-512

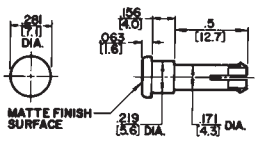


Series TT-513

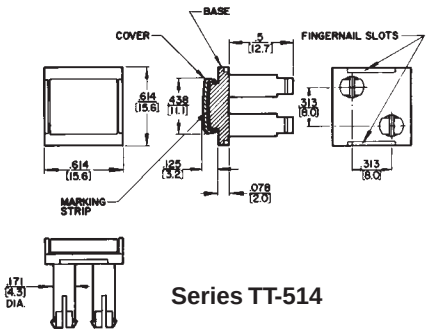


Series TT-514

DIMENSIONS ARE FOR REFERENCE ONLY Inch (mm)

* Please visit the product pages on our website for the most up-to-date product information

# MINIATURE, DUMMY PLUGS, HOLE PLUGS

**TT203 TT-Terminating Plug**

**TT205 TT-Dummy Plug**

**TT207 TT-Twin Looping Plug**

**TT515 TT-Dummy Plugs**

**TT510 Hole Plug**

**TT5152 or TT206**

**TT210**

Terminating, dummy and looping plugs are designed for use with Tini-Telephone® Jacks. TT-Phone Plugs are also recommended for use on other miniature telephone jacks with same bushing inside diameter and compatible tip and/or ring spring configurations.

## TT-TERMINATING PLUGS

TT-Phone Plug terminating plugs are used to terminate a circuit with a specific resistive load. A precision 1/2 watt, ± 1% resistor is molded into the handle of each terminating plug. See “PLUG SCHEMATICS” for resistor wiring. Resistance value is marked on plug handle. Other resistance values are available on special order.

## TT-DUMMY PLUGS

TT-Phone Plug dummy plugs are designed to be inserted into phone jacks to actuate shunt and isolated switching circuits.

## TT-LOOPING PLUGS

TT-Phone Plug looping plugs are used to loop or patch adjacent jack circuits. See “PLUG SCHEMATICS” for wiring.

## TT-HOLE PLUG

TT-Hole Plugs are used to close off unused openings in all Switchcraft TT-Jack Panels. Molded of black plastic with brass sleeve.

## ORDERING

1. Order by part number from table.
2. Contact Switchcraft for any special order items.

## SPECIFICATIONS

**Series TT200 Tip Rod, Ring and Sleeve:**
Brass per QQ-B-626.
**Handle:** Molded PVC, ivory or black.
**Series TT515:** Molded of dimensionally stable plastic in black, red or white.

| Part No. | Description | Schematic | Color |
|---|---|---|---|
| ◊TT201 | 2-conductor terminating-135Ω | 1 | Gray |
| ◊TT202 | 2-conductor terminating-600Ω | 1 | Gray |
| TT203 | 3-conductor terminating-135Ω | 2 | Gray |
| TT204 | 3-conductor terminating-600Ω | 2 | Gray |
| TT205 | 2-conductor dummy | 5 | Gray |
| TT206 | 3-conductor dummy | 6 | Gray |
| ◊TT207 | 2-conductor twin looping | 3 | Gray |
| TT208 | 3-conductor twin looping | 4 | Gray |
| TT209 | 2-conductor twin dummy | 5 | Ivory |
| TT210 | 3-conductor twin dummy | 6 | Ivory |
| TT510 | Hole Plug | – | Black |
| TT5151 | 2- or 3-conductor dummy | – | Red |
| TT5152 | 2- or 3-conductor dummy | – | Black |
| TT5155 | 2- or 3-conductor dummy | – | White |

◊ Special order only; contact Switchcraft for price and delivery.

### Plug Schematics

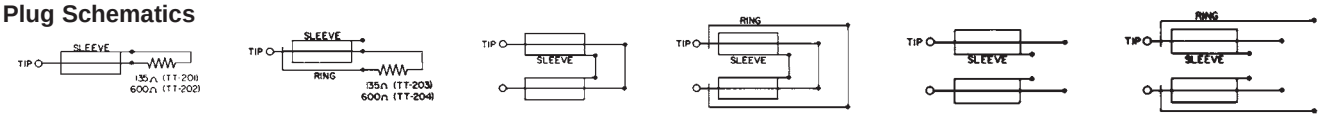


1 2 3 4 5 6

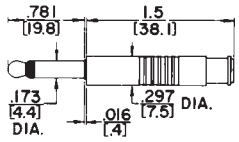


**Nos. TT-201, TT-202, TT-205**

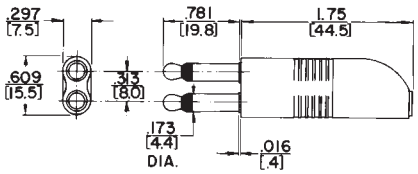


**Nos. TT-207, TT-209**

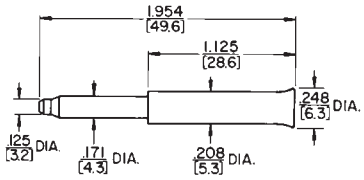


**Nos. TT-515-1, -2**

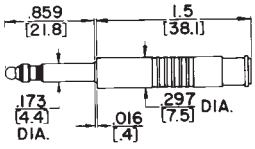


**Nos. TT-203, TT-204, TT-206**

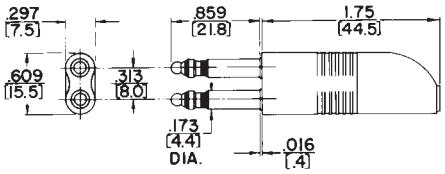


**Nos. TT-208, TT-210**

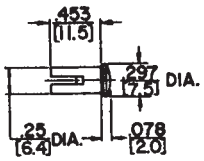


**Nos. TT-510**

DIMENSIONS ARE FOR REFERENCE ONLY Inch (mm)



® Registered trademark of Switchcraft, Inc.

Note: Contact your Switchcraft Representative for price and delivery

* Please visit the product pages on our website for the most up-to-date product information

# DESIGNATION STRIPS

Designation strips with protective covers are supplied with all tini-telephone® jack panels, jackfields and certain standard jack panels. Replacement kits and individual parts are also available. Legends can be marked in pencil, ink, or lettering transfers. Kwik-Change® is the name of all horizontal strips. See illustration.

Three types of designation strips are available as accessories:

1. Kwik-Change single height.
2. Kwik-Change double height.
3. X-Wide vertical.

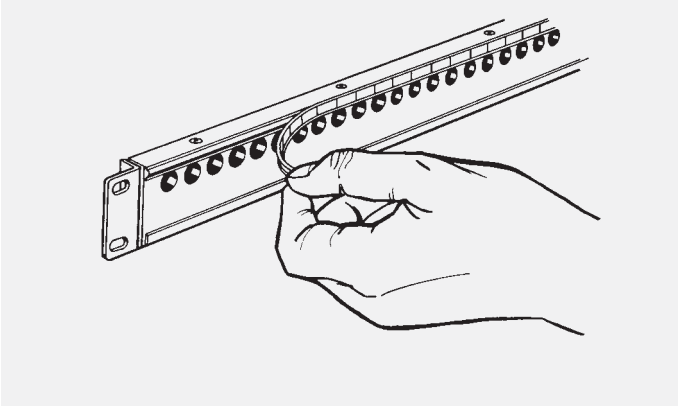

## KWIK-CHANGE® DESIGNATION STRIPS (SINGLE HEIGHT)

Two types of single height designation strips are available:

1. SERIES 1600, A1600, B1600, C1600, 1700, B1700, 1400300, 2600300, JP012000 through JP122000
   - Extruded aluminum mounting strip
   - Four mounting screws
   - Marking strips
   - Clear plastic strip covers

Mounting strips are fastened with four mounting screws provided. Marking strip slides into the clear plastic cover, and cover is snapped into place on the mounting strip. Legends can be marked in pencil, ink, lettering transfers, typewriter, etc.

## SPECIFICATIONS

(Used on panels 1600, A1600, B1600, C1600, 1700, B1700)
**Mounting Strip:** Extruded aluminum black anodized
**Cover:** Clear extruded plastic.
**Marking Strip:** White matte finish plastic.
**Screws:** Copper alloy, plated.
(Used on panels 1400300, 1600300)
**Mounting Strip:** Aluminum alloy, extruded, black anodized.
**Cover:** Clear extruded plastic.
**Marking Strip:** White matte finish plastic.
**Screws:** Steel, plated.

SERIES TT51 through TT62, TT-Connectorized (2-, 4- and 6-Wire), JP012000 through JP122000, TTPC and DSX panels. Mounting strips are extruded as part of the panel. Otherwise, use is the same as above.

## ORDERING

Order by part number from table.

**Kwik-Change Designation Strip Kit Number DS301 (single height)**

**Kwik-Change Designation Strip Kit Number DS318 (single height)**

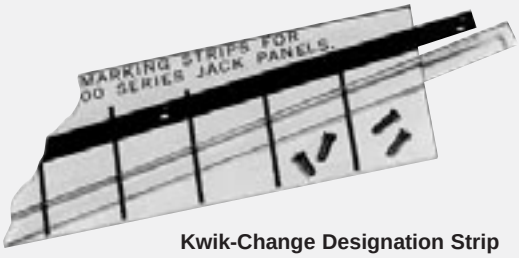

**Kwik-Change Designation Strip Kit Number TT501 (single height)**

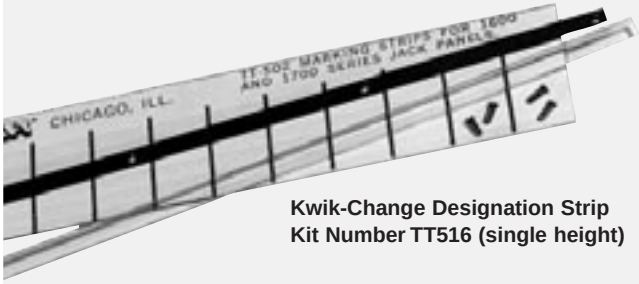


**Kwik-Change Designation Strip Kit Number TT516 (single height)**

DIMENSIONS ARE FOR REFERENCE ONLY Inch (mm)

* Please visit the product pages on our website for the most up-to-date product information

# DESIGNATION STRIPS (continued)

## SINGLE HEIGHT DESIGNATION STRIPS

| Part No. | Description | For Panels |
|---|---|---|
| **TT501** | Kits (single height) includes: 1-mounting strip (8.375" long) 1-cover 1-marking strip sheet (5 strips per sheet) 4-mounting screws | 1600, 1700 (Alternate spacing) |
| **TT502** | Marking Strip sheet (used with Kit TT501 & TT521) | – |
| **TT503** | Cover (used with Kit TT501 and TT504) | – |
| **TT504** | Kits (single height) includes: 1-mounting strip (8.375" long) 1-cover 1-marking strip sheet (5 strips per sheet) 4-mounting screws | A1600, C1600 (Continuous spacing) |
| **TT519** | Kit (single height) includes: 2-covers (9.61" long) 1- marking strip sheet (5 strips per sheet) | TT52, TT54 TT56, TT58 TT60, TT62 (23" Panels) |
| **TT520** | Marking strip sheet (used with Kit TT519) | – |
| **TT521** | Kit (single height) includes: 2-covers (8.25" long) 1- marking strip sheet (5 strips per sheet) | TT51, TT53 TT55, TT57 TT59, TT61, Connectorized Jackfields (2-, 4- and 6 wire) |

| Part No. | Description | For Panels |
|---|---|---|
| **DS301** | Kit (single height) includes: 1-mounting strip (17" long) 1-cover 1-marking strip sheet (5 strips per sheet) 4-mounting screws | 1400301, 2600301 |
| **DS302** | Cover (used with Kit DS301) | – |
| **DS303** | Marking strip sheet (used with Kit DS301 and DS316). | – |
| **DS306** | Marking strip sheet (used with Kit DS307 and DS308). | – |
| **DS307** | Kit (single height) includes: 2-covers (16.5" long) 1-marking strip sheet (5 strips per sheet) | JP012000, JP032000, JP052000 |
| **DS308** | Kit (single height) includes: 2-covers (19.5" long) 1-marking strip sheet (5 strips per sheet) | JP022000, JP042000, JP062000 |
| **DS316** | Kit (single height) includes: 2-covers (16.25" long) 1- marking strip sheet (5 strips per sheet) | JP072000 JP092000, JP112000 |
| **DS317** | Marking strip sheet (used with Kit DS318). | – |
| **DS318** | Kit (single height) includes: 2-covers (20" long) 1- marking strip sheet (5 strips per sheet) | JP082000 JP102000, JP122000 |

## KWIK-CHANGE® DESIGNATION STRIPS (DOUBLE HEIGHT)

Double height strips allow larger legends. Can be factory installed on Series 1600, B1600, 1700 and B1700 panels, or may be ordered separately for customer installation.

- Series 1600/B1600: Four strips can be mounted, two above each row of jack openings.
- Series 1700: Two strips can be mounted, two above or two below (special order) the double row of jack openings.
- Series B1700: Two strips can be mounted (side-by-side) above top row of jacks.

**NOTE:** When TT516 kits are mounted above top row of jacks on Series 1600, B1600 and B1700, strips will overhang top edge of panel by .156 inches For most applications, the strips help seal the normal opening between adjacent panels. Series B1700 panel mounting screws may have to be loosened to facilitate removal of the panel above it in this type of installation.

## SPECIFICATIONS

**Mounting Strip:** Black thermoplastic UL 94V-0.
**Cover:** Clear plastic.
**Marking Strip:** Matte finish white plastic.
**Mounting Screws:** Copper alloy, plated.

## ORDERING

1. Order by part number from table.
2. To order double height strips installed on panels, contact Switchcraft.

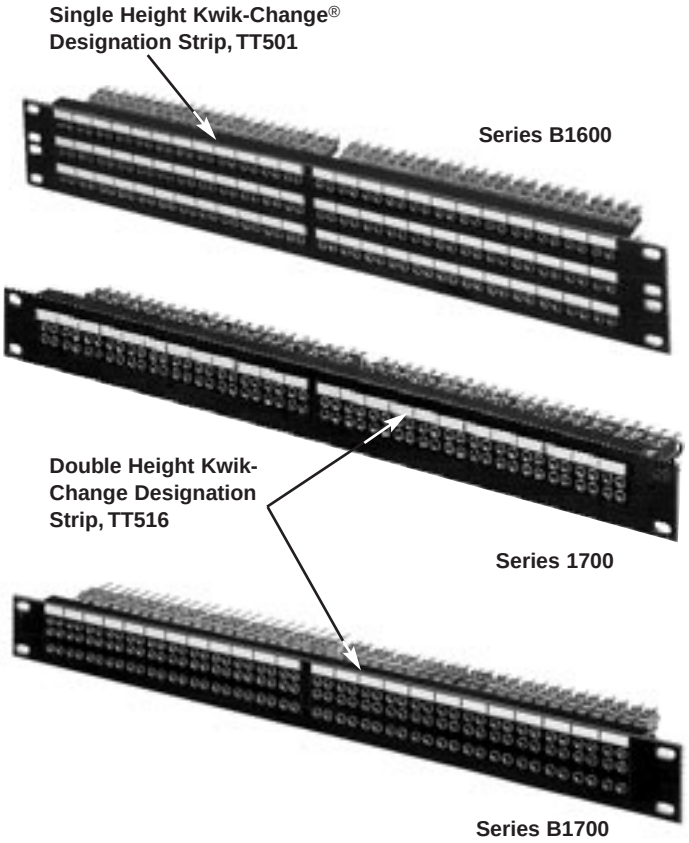


DIMENSIONS ARE FOR REFERENCE ONLY Inch (mm)


® Registered trademark of Switchcraft, Inc.
Note: Contact your Switchcraft Representative for price and delivery

* Please visit the product pages on our website for the most up-to-date product information

# KWIK-CHANGE® DESIGNATION STRIPS (DOUBLE HEIGHT)

**Kwik-Change® Designation Strip DS311 (double height)**

## DOUBLE HEIGHT DESIGNATION STRIPS

| Part No. | Description | For Panels |
|---|---|---|
| **DS311** | Kit (double height) includes:<br>1-mounting strip (17" long)<br>1-cover<br>1-marking strip sheet<br>(3 strips per sheet)<br>4-mounting screws | 2600310,<br>1400315 |
| **DS312** | Cover (used with Kit DS311) | – |
| **DS313** | Marking strip sheet (used with Kit DS311) | – |

| Part No. | Description | For Panels |
|---|---|---|
| **TT516** | Kit (double height) includes:<br>1-mounting strip (8.375" long)<br>1-cover<br>1-marking strip sheet<br>(3 strips per sheet)<br>4-mounting screws | 1600, B1600,<br>1700, B1700 |
| **TT517** | Marking strip sheet (used with Kit TT516) | – |
| **TT518** | Cover (used with Kit TT516) | – |

## X-WIDE® VERTICAL DESIGNATION STRIPS

X-Wide designation strips mount on either side (or both) of standard 19" and 23" wide panels and do not interfere with horizontally mounted strips. Each kit contains two mounting brackets which easily fasten with mounting screws provided. Marking strips and clear plastic covers slide into place. Each kit fits onto both sides of a jack panel. X-Wide strips are used on the following panels:

| UNDRILLED | PREDRILLED |
|---|---|
| 1600, A1600, 1700 B1700, TT51 through TT62, 2-, 4- & 6-Wire TT-Connectorized Jackfields, 2- & 4-Wire TTPC Connectorized Jackfields, 1200, 1400, 1400320, 2600,and 2600320. | D1600, D1700, BD1700, TTD51 through TTD62, 2- 4 & 6-Wire TT-Connectorized Jackfields, 2 & 4-Wire TTPC Connectorized Jackfields. |

**SPECIFYING NOTES:** Each kit fits both sides of a jack panel (Standard height 1.75". Also available in 3.5 inch and 5.25 inch heights.

Prefix letter"D" indicates panels have been predrilled countersunk holes to facilitate mounting X-Wide strips. Series 1200, 1400, & 2600 can be predrilled on special order.

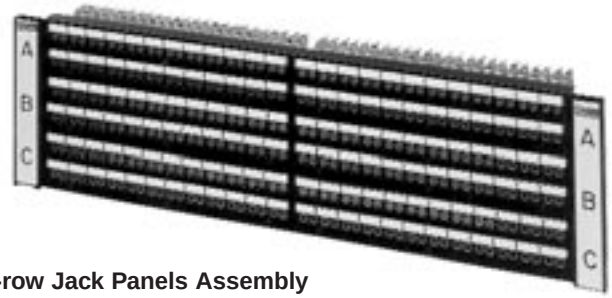


**3-row Jack Panels Assembly with DS323 X-Wide Designation Strip installed**

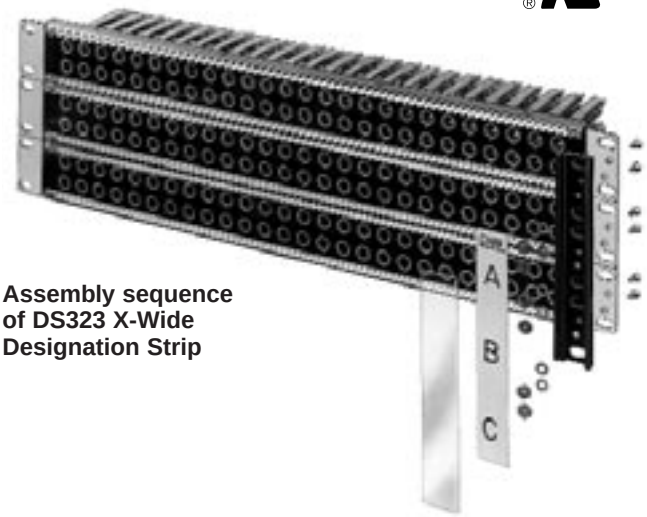


**Assembly sequence of DS323 X-Wide Designation Strip**

DIMENSIONS ARE FOR REFERENCE ONLY Inch (mm)

* Please visit the product pages on our website for the most up-to-date product information

# X-WIDE® VERTICAL DESIGNATION STRIPS

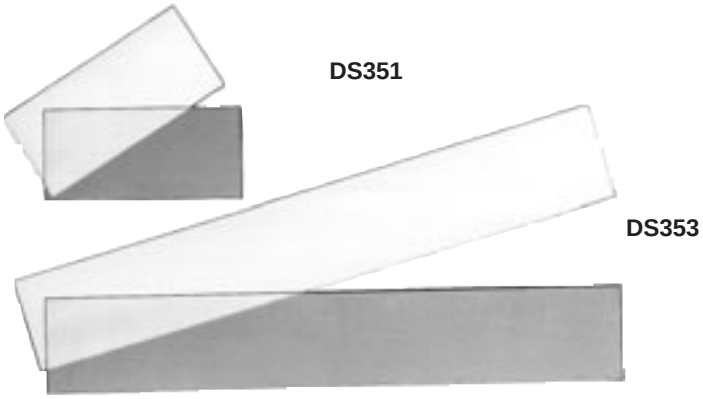


## X-WIDE VERTICAL DESIGNATION STRIPS

| Part No. | Description | For Panels |
|---|---|---|
| **DS321** | Kit (.75 x 1.75 inches) includes:<br>2-mounting brackets<br>2-marking strips<br>2-covers<br>4-mounting screws, nuts and lockwashers | 1600, A1600<br>1700, B1700<br>TT51 thu TT54, TT59 thru TT62, 2- & 4-Wire TTConnectorized Jackfields, 2-, 4- & 6-Wire TTPC Conntectorized Jackfields |
| **DS322** | Kit (.75 x 3.5 inches) includes:<br>2-mounting brackets<br>2-marking strips<br>2-covers<br>8-mounting screws, nuts and lockwashers | Same as DS321 (Mounted in pairs) |
| **DS323** | Kit (.75 x 5.25 inches) includes:<br>2-mounting brackets<br>2-marking strips<br>2-covers<br>12-mounting screws, nuts and lockwashers | 6-Wire TT-Connectorized and panels for DS321 |
| **DS350** | Kit (.75 x 2.265 inches) includes:<br>2-mounting brackets<br>2-marking strips<br>2-covers<br>4-mounting screws, nuts and lockwashers | B1600, C1600 |
| **DS351** | Kit (.75 x 1.75 inches) includes:<br>1-marking strip<br>1-cover<br>(Used on all 1.75 inch height connectorized jackfields except next to hinge) | 2-, 4- & 6-Wire Connectorized Jackfields, TTPC Connectorized Jackfields |
| **DS352** | Kit same as DS351except narrow width. To be used next to hinge. | Same as DS351 |
| **DS353** | Kit (.75 x 5.25 inches) includes:<br>1-marking strip<br>1-cover | 6-Wire TT-Connectorized Jackfields |

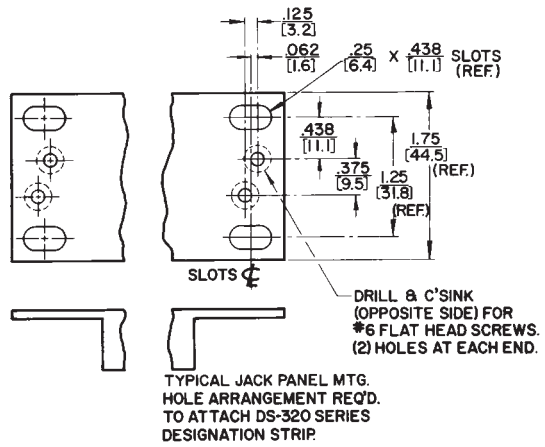


**SERIES DS-320, Mechanical Details**

## ORDERING

1. Order by part number from table.
2. To order X-Wide® strips installed on panels, contact Switchcraft.

DIMENSIONS ARE FOR REFERENCE ONLY Inch (mm)



® Registered trademark of Switchcraft, Inc.
Note: Contact your Switchcraft Representative for price and delivery

* Please visit the product pages on our website for the most up-to-date product information

# DESIGN MATERIALS AND FEATURES

Molded cable assemblies offer many advantages over conventionally-fabricated cables:

- Improved wiring strain relief.
- Proper match of cable diameter to handle.
- Sealed junction: Less exposed area; less contamination due to moisture, dust, dirt.
- Lower weight and smaller size.
- 100% shielding on selected types.
- Color to match/complement equipment decor.
- Legends, color codes, ribs, dot, customer logo/indicia can be added.
- All molded cables are 100% tested for continuity, shorts and voltage breakdown (250 or 500V).
- All Switchcraft® molded assemblies are UL recognized.

## OEM COST SAVINGS

Molded cable assemblies generally cost less than your in-house conventionally-fabricated assemblies. Specific advantages are elimination of:

1. Your evaluation, ordering, incoming inspection, and stocking of individual parts.
2. Your plant/equipment needs for in-house fabrication.
3. Your tooling/labor costs
4. Your production line QA/QC.

## MOLDED CABLE RELIABILITY

In a series of OEM-conducted tests of Switchcraft versus non-molded, fabricated cables, Switchcraft cables were shown to be superior.

1. Fabricated cables broke at lower pull forces: OEM types – 24 to 34 pounds, molded cables – 37.5 to 41 pounds (molded cables did not break at terminations; the cable itself broke about one to two feet back from the connector).
2. Fabricated cables suffered broken wires at low pull-out force limits. Molded cables had cable breaks before cable pulled out of the handle, in most instances. And this failure occurred, as previously noted, at higher pull-out forces.

Strengthened molded cable assemblies out-performed fabricated assemblies, and in fact, the crimp molding process makes it stronger than the wire itself.

## SPECIAL ORDER ITEMS

- Customer logo
- Panel Relief Bushing. Specify panel thickness and exact point on cable where bushing is to be installed. Standard panel opening is .50" (12.7 mm) diameter. Double flatted in panels up to .125" (3.18 mm) thick.
- Molded Cable Clamp Bands or Y-Junctions. (Refer to page 258.)
- Special Termination (see separate chart). Contact Switchcraft for specials and provide complete details.

## TYPES OF PLASTICS

Thermoplastics used for molded cable assemblies, have excellent electrical and mechanical properties, are economical, convenient for molding, and can be provided in an array of colors. They have electrical characteristics far higher than required, and provide dimensional stability, abrasion and abuse resistance, and can be molded with a smooth mirror-like finish or matte or semi-matte finishes.

## WIRE AND CABLE

Switchcraft provides over 100 types of wire and cable from which molded cable assemblies are manufactured. Basically, 30 different cables are used for standard tooling. There are no additional charges where standard tooling exists.

Tooling is designed so cable entry openings on molded plastic handles fit tightly to the outside diameter of the cable. The tighter fit holds cable secure and is more resistant to abuse than if a larger opening were used.

## DESIGN AND FABRICATING TECHNIQUES

Switchcraft's engineering staff is supported by a complete tool and die making facility, as well as a fully equipped and staffed molding department to fill all of Switchcraft's plastic molding requirements.

The molding department uses injection molders of semi-automatic, multiple-cavity type to obtain high production rates.

## MANUFACTURING SEQUENCE (EXAMPLE)

**Step 1:** The 1-piece tip rod is firmly staked into the phone plug finger assembly, making a complete and mechanically secure assembly. (Refer to Figure 1) The staking process, using precision manufactured parts, keeps the tip rod assembly from working loose and causing mechanical and electrical problems later.

**Step 2:** Cable center conductor is soldered to tip rod; then the tubular bridge sleeve is slid forward, bringing the cable shield in contact with the circular notch around rear of tip rod assembly.

**Step 3:** Bridge sleeve is crimped tightly to tip rod assembly and cable. Center conductor is completely isolated from potential pulling strains, and shield makes a firm, low resistance connection with plug sleeve.

**Step 4:** A dimensionally stable plastic handle/body of the proper color, size and shape is molded into place. Features are depressions for finger grip, cable entry opening customized to cable diameter to minimize wear on cable, and handle/body molded in one place.

From start to finish, Switchcraft's molded cables are designed and built with maximum quality and reliability. There is virtually no limit to the type and characteristics of special molded cables that Switchcraft can build to special order. For all special orders, consult Switchcraft.

**FIGURE 1: MOLDED CABLE MANUFACTURING STEPS FOR 1/4" LITTEL PLUG®**

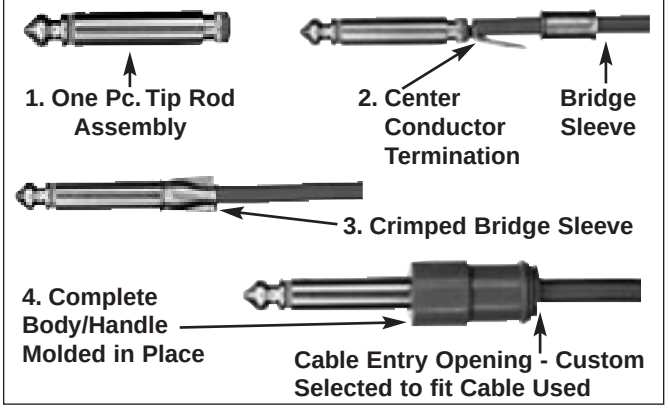


DIMENSIONS ARE FOR REFERENCE ONLY Inch (mm)

* Please visit the product pages on our website for the most up-to-date product information

# 3.5MM MOLDED CABLES

35HRXXX35

36HRXXX36

35HRXXX84

## FEATURES AND BENEFITS

- Choose plug-to-plug or plug-to-stripped and tinned leads
- 3.5 mm plugs available as straight or right-angle
- Available in mono and stereo
- NOM.29 GA jacketed conductors (red and white) with copper spiral shield
- Cable O.D. 3.0 mm nom./.118" nom.
- Black cable

## ORDERING INFORMATION

1. Order by part number.
2. Contact Switchcraft for custom requirements.

## SPECIFICATIONS

### PLUGS

**Tip, Ring and Sleeve:** Brass with nickel-plate
**Flex Life:** 5000 cycles minimum
**Plug Insulator:** ACETAL

## PART NUMBERING SYSTEM

| | | | | |
|---|---|---|---|---|
| 32 - Mono<br>33 - RA Mono<br>35 - Stereo<br>36 - RA Stereo | H - Black | R - 3.0 mm nom. 2-conductor wire with spiral copper shield | Length (feet)<br>036 (3)<br>072 (6)<br>144 (12) | 32 - Mono<br>33 - RA Mono<br>35 - Stereo<br>36 - RA Stereo<br>84 - Stripped and tinned<br>90 - Straight Cut Off |

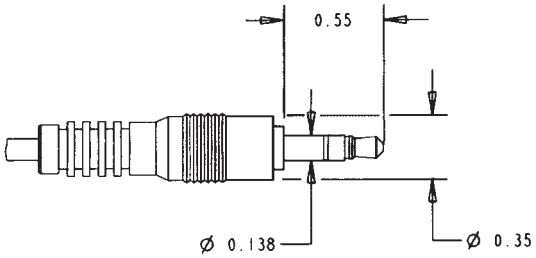


**END CODE: 35**
3.5 mm STRAIGHT PLUG

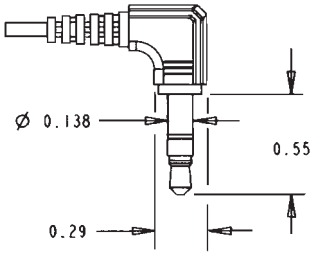


**END CODE: 36**
3.5 mm RIGHT-ANGLE PLUG

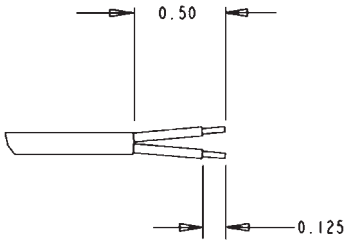


**END CODE: 84**
STRIP and TIN

DIMENSIONS ARE FOR REFERENCE ONLY Inch (mm)


® Registered trademark of Switchcraft, Inc.
Note: Contact your Switchcraft Representative for price and delivery

* Please visit the product pages on our website for the most up-to-date product information

# MOLDED CABLE ASSEMBLIES
## With Power-Plug Battery Charger Plugs and Jacks

**ST760, ST765 – Termination Code: 47, 48**

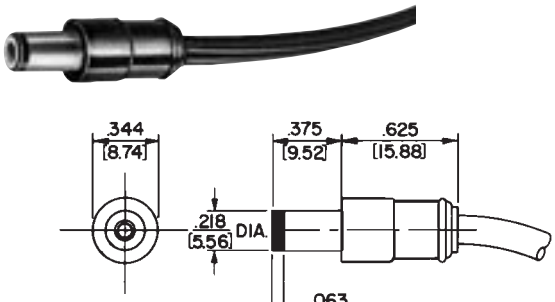


ST-760 .080-.084 DIA x .328 DEEP (2.03-2.13) DIA x (8.33) DEEP

ST-765 .099-.103 DIA x .328 DEEP (2.52-2.61) DIA x (8.33) DEEP

**NOTE:** ST760 is a molded version of S760; ST765 is a molded version of 765.

**RA760, RA765 – Termination Code: 52, 53**

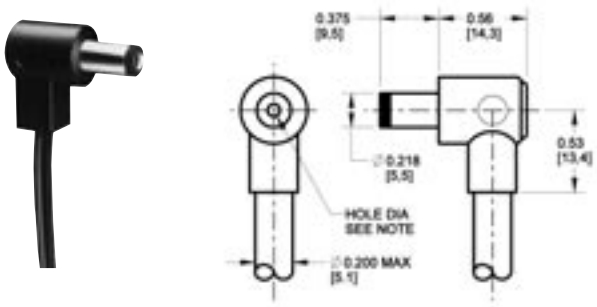


RA-760 .080-.084 DIA x .328 DEEP .(2.03-2.13) DIA x (8.33) DEEP

RA-765 .099-.103 DIA x .328 DEEP .(2.52-2.61) DIA x (8.33) DEEP

**RA712A and RA722A**
**Termination Code: 71, 72**

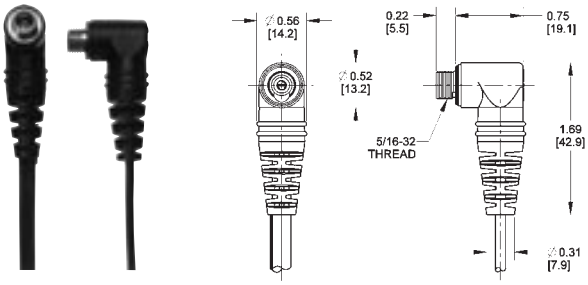


*RA712A
.108" -.112" Split Pin
Collapses to fit .10" Diameter Pin

RA722A
.086" -.090" Split Pin
Collapses to fit .08" Diameter Pin

Ask About Our Locking Power Plugs

### SPECIFICATIONS
### PLUG
**Sleeve:** Copper alloy, nickel-plated.
**Pin:** Silver-plated copper alloy.
**Finger Insulator:** Plastic.
**Insulating Washers:** Rigid plastic.
**Sleeve Terminal:** Steel, tin-plated.
**Molded Handle:** Plastic.

### JACK
**Bushing:** Brass, nickel-plated copper alloy.
**Washers:** Rigid plastic.
**Pin, Springs, and Terminals:** Plated copper alloy.
**Housings:** Thermoplastic.

### CABLE
We will build assemblies on cable furnished by you, .156" (3.96 mm) outside diameter, or on cable we purchase to your specifications. Jacket must have temperature rating of 60° C minimum. Optional mold available for larger cable; order as ST760L or ST765L.

### DESIGN FEATURES
- **ST760, ST760L, RA760 –** accepts .08" (2.03 mm) diameter pin.
- **ST765, ST765L, RA765 –** accepts .099" (2.54 mm) diameter pin.
- **RA712A:**
- Mates with ST765, ST765L, and RA765.
- 2 conductor.
- Mounts in .313" diameter hole in panels up to .125" thick.
- Pin outside diameter is .108" - .112" split pin.
- Automatic switchover from AC to DC.
- **RA722A:**
- Mates with ST760, ST760L, and RA760.
- Pin outside diameter is .086" - .090" split pin.
- Molded-in cable clamp sleeve terminal (RA plugs only).
- For use with sockets similar to those used on portable radios, tape recorders, television receivers and appliances which feature AC adapters and/or battery chargers.
- Available with terminations of another ST760, RA760 stripped and tinned ends, spade lugs, alligator clips, and more on special order.
- Jacks available with extended bushing for use with Switchcraft locking power plugs 761K, 766K, S761K, and S766K on special order.

See ordering guide on next page.

DIMENSIONS ARE FOR REFERENCE ONLY Inch (mm)

* Please visit the product pages on our website for the most up-to-date product information

# MOLDED CABLE ASSEMBLIES WITH POWER PLUGS AND JACKS PART NUMBERING SYSTEM

### TO CREATE A PART NUMBER

1. Identify Terminations (both ends)
2. Indicate Color and Type of Cable
3. Select the Length of Assembly

### DC POWER CABLE ASSEMBLIES

| Type | Termination | | Color | Cable* | Length (feet) | | | Termination | |
|---|---|---|---|---|---|---|---|---|---|
| | | | | | | | | | |
| ST760 | 4 | 7 | G-Gray | C | 0 | 1 | 8 (1.5) | 4 | 7 |
| ST765 | 4 | 8 | H-Black | K | 0 | 2 | 4 (2) | 4 | 8 |
| ST760L | 5 | 7 | | | | | | 5 | 7 |
| ST765L | 5 | 8 | | | | | | 5 | 8 |
| ST760K | 7 | 3 | | | | | | 7 | 3 |
| ST765K | 7 | 4 | | | | | | 7 | 4 |
| RA760 | 5 | 2 | | Y | 0 | 3 | 6 (3) | 5 | 2 |
| RA765 | 5 | 3 | | Z | 0 | 4 | 8 (4) | 5 | 3 |
| RA712A | 7 | 1 | | | 0 | 7 | 2 (6) | 7 | 1 |
| RA722A | 7 | 2 | | | 1 | 2 | 0 (10) | 7 | 2 |
| | | | | | | | | 8 | 4 |
| | | | | | | | | 9 | 0 |

*See "Cable Types" chart on page 260. **Note:** Some configurations will be special orders. Contact Switchcraft.

## TYPICAL STANDARD PART NUMBERS

| STRAIGHT 2-CONDUCTOR .100 PIN POWER PLUG (#48) TO: | | | |
|---|---|---|---|
| **Termination (other end)** | **Cable** | **Length (feet)** | **Part Number[1]** |
| (power plug) #48 | C | 6 | **48HC07248** |
| (stripped wires) #84 | C | 6 | **48HC07284** |
| (blunt cut) #90 | C | 6 | **48HC07290** |
| (power jack .100 pin) #71 | K | 6 | **48HK07271** |

1. All cables listed here are black.

DIMENSIONS ARE FOR REFERENCE ONLY Inch (mm)



® Registered trademark of Switchcraft, Inc.
Note: Contact your Switchcraft Representative for price and delivery

* Please visit the product pages on our website for the most up-to-date product information

# EN3™ MINI WEATHERTIGHT OVERMOLDED CABLE ASSEMBLIES

## FEATURES AND BENEFITS

- Dual purpose handle provides flex relief and finger grip design for easy insertion and withdrawal.
- Available in both cord and in-line versions.
- 2 through 8 pin configurations.
- Superior leakage protection. Contact area is double-sealed for excellent moisture and chemical resistance.
- Integral O-ring and gasket. O-ring is molded onto cord housing assembly and gasket is molded onto panel housing assembly to prevent leakage and eliminate need for additional copper case o-rings and gaskets.
- Thermoplastic rubber body simulates closed entry contact system to prevent probe damage or accidental loss of spring retention due to misaligned or bent pins.
- Housing rated UL 94V-O against flammability.
- Exceeds Coast Guard specifications for water tightness (CFR 46 Part 110.20).
- Exceeds enclosure rating IP16/IP18 when not mated or covered and IP66/IP68 when mated or covered (IEC 529).
- Exceeds enclosure rating 6P at 1000V when mated or covered (NEMA 250).

## APPLICATIONS

- Process Control
- Communications
- Marine Electronics
- Transportation
- Medical Instrumentation
- General Industrial Electronics
- Geothermal Instrumentation

## MATERIALS

**Connector shells, contact locking disk:**
Thermoplastic polymer glass fiber, flame retardant
**Coupling ring:** Nylon
**Connector shell interior:** Thermoplastic rubber
**Contacts:** Copper base alloy gold-plated over nickel underplate

**PART NUMBERING GUIDE***
**Example:**

| 1st Termination | Color | Cable | Length in Inches | 2nd Termination |
|---|---|---|---|---|
| 503 | H | A | 072 | 184 |

*In most instances the multi-conductor cable will be used – found on page 252.

The overmolded EN3™ cable can accept nominal cable O.D.'s up to .300.

Tooling charges may apply for customer specified cable.

## SPECIFICATIONS
### MECHANICAL

**Shock:** Mil-Std 202 Method 213B, condition K
**Vibration:** Mil-Std 202 Method 201
**Life:** 600 insertion/withdrawal cycles (minimum)

### ELECTRICAL

**Voltage Rating (sea level):** Tested at 600 VRMS
**Insulation Resistance:** 100 megohms (minimum) at 77° F
**Contact Resistance:** 5 milliohms (maximum)
**Current Rating:** 7.5 Amps (#20 contact);
13.0 Amps (#16 contact)

### ENVIRONMENTAL

**Temperature Limits:** -40°C to +65°C (non-operating)
**Moisture Resistance:** Mil-Std 202 Method 106F
**Insulation Resistance:** Mil-Std 202 Method 302 condition B
**Thermal Shock:** Mil-Std 202 Method 107G
**Salt Spray:** Mil-Std 202 Method 101D condition B

### RATINGS

IP16/IP18
IP66/IP68
NEMA 250 (6P)
CFR 46 Part 110.20
UL 94V-O
Patent 5,485,673 File 36049

**OVERMOLDED STYLE NUMBER**
**#20 CONTACT SIZE**

| Number of Pins | 2 | 3 | 4 | 5 | 6 | 7 | 8 |
|---|---|---|---|---|---|---|---|
| Male Cord | 502 | 503 | 504 | 505 | 506 | — | — |
| Female Cord | 512 | 513 | 514 | 515 | 516 | 517 | 518 |
| Male Inline | 522 | 523 | 524 | 525 | 526 | 527 | 528 |
| Female Inline | 532 | 533 | 534 | 535 | 536 | — | — |

**OVERMOLDED STYLE NUMBER**
**#16 CONTACT SIZE**

| Number of Pins | 2 | 3 | 4 | 5 | 6 | 7 | 8 |
|---|---|---|---|---|---|---|---|
| Male Cord | 552 | 553 | — | — | — | — | — |
| Female Cord | 562 | 563 | — | — | — | — | — |
| Male Inline | 572 | 573 | — | — | — | — | — |
| Female Inline | 582 | 583 | — | — | — | — | — |

Note: 9-18 versions can also be molded. Contact factory for details.

DIMENSIONS ARE FOR REFERENCE ONLY Inch (mm)

* Please visit the product pages on our website for the most up-to-date product information

# CORDETTE® AND CORD SWITCH ASSEMBLIES

97GVXXX06

99GVXXX04

97WVXXX06 (shown with optional clip)

99GD07261

99WD07284

97WDXXX61

Also available with 3.5 mm plug finger termination.

## FEATURES AND BENEFITS

- Momentary, 0.5 A switching combined with 1-piece molded plastic body qualifies Cordette for all types of commercial and industrial usage.
- Available with molded-on Cordette switch or assembled Cord switch (ED series).
- Cable features PVC outer jacket and withstands rugged use.

## SPECIFICATIONS STYLE 97

**Body:** Series ED900
**Housing:** Die-cast zinc, satin nickel-plated.
**Switch Body and Insert Bushing:** H.H. Brass, nickel-plated.
**Insulation:** XXXP paper-base phenolic.
**Cable Relief Bushing:** Black neoprene.
**Pressure Plates:** Stainless steel.
**Cable Relief Screws:** Steel, nickel-plated.

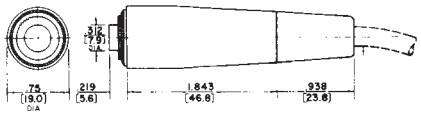

SERIES ED900

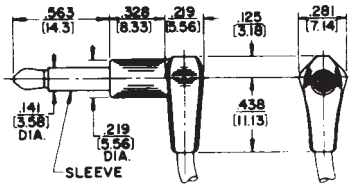

TERMINATION CODE: 51

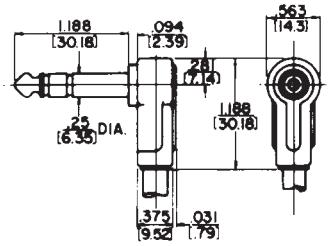

TERMINATION CODE: 06, 07
(06 - 2 conductor not shown)

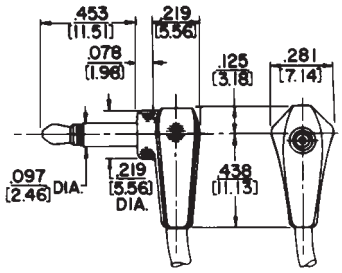

TERMINATION CODE: 61

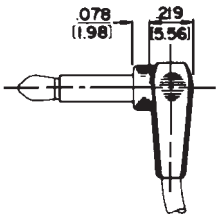

TERMINATION CODE: 50

TERMINATION CODE: 84

| DESCRIPTION Example: | 1st Term Code | Housing & Cable Color | CABLE CODE | Cable Length (In.) X | X | X | 2nd Term Code | Circuitry | Button Color |
|---|---|---|---|---|---|---|---|---|---|
| Std. Cordette (921K) | 99 | G | V | 0 | 7 | 7 | 84 | Std. - 1A (No Code) | Std. Black (No Code) |
| ED903 Series | 97 | | | | | | | 1 - 1B | H - Black |
| Standard Cable Type for 1/4" Plugs | | G-Gray | V (W1230-1) | .250" | PVC | 18GA | 06 | 2 - 1C | R - Red |
| | | H-Black | V (W1230-2) | .250" | PVC | 18GA | 07 | 3 - AB | W - White |
| | | B-Beige | V (W1230-4) | .250" | PVC | 18GA | | | |
| | | W-White | V (W1230-5) | .250" | PVC | 18GA | | | |
| Standard Cable Types for Tini® and Micro Plugs | | G-Gray | D (W1032-1) | .109" | PVC | 25GA | 61 | | |
| | | H-Black | D (W1032-2) | .109" | PVC | 25GA | 50 | | |
| | | W-White | D (W1032-3) | .109" | PVC | 25GA | 51 | | |
| | | H-Black | E (W1065-2) | .100" | PVC | 26GA | | | |

DIMENSIONS ARE FOR REFERENCE ONLY Inch (mm)


® Registered trademark of Switchcraft, Inc.
Note: Contact your Switchcraft Representative for price and delivery

* Please visit the product pages on our website for the most up-to-date product information

# MOLDED CABLE ASSEMBLIES WITH CORDETTE® SWITCHES

Ask About Our New Sealed Cordette® ST901 Code: 98

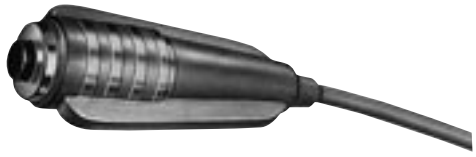

**ST900**
**Termination Code: 99**

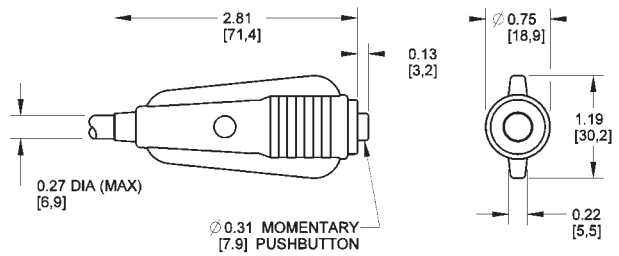


**ST900**

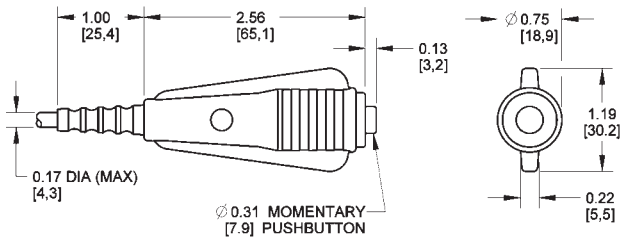


**ST900F**

## SPECIFICATIONS
### SWITCH

**Housing:** White plastic (standard).
**Molded Body:** Gray plastic (standard) with contrasting trim and gray pushbutton.
**Contacts:** Integral, copper alloy, hard gold-plated form 1-A, 0.5 A, 50 W maximum, AC, non-inductive load. Not recommended for high voltage circuits.
**Insulation:** Thermoplastic UL 94V-0.
**Button Color:** Black (standard). Other colors available on special order.

### CABLE

**Standard Unshielded—Type W-1230.**
**Note:** See Standard Cable Chart on page 260 for details.
We will build assemblies on cable furnished by you, .27" (6.68 mm) outside diameter, or on cable we purchase to your specifications. Jacket must have temperature of 60° C minimum.
**ST900 (#99)**
Button stroke only .063" (1.6 mm). Cable leads soldered directly to switch terminals. Standard button is with 1-A switching. Use termination number "99" with all cable numbering charts except multi-pin interconnection. Use code "198" for multi-pin interconnections.
See Switch Section of Switchcraft's Engineering Design Guide for more details on the ST900.

| Part Number | Description |
|---|---|
| 921 | Cordette Switch, phone jack termination |
| 921K | Same as 921, plus 6-foot, 2 conductor cable with stripped and tinned leads. |

## SPECIAL ORDER FEATURES

- 1-B, 1-C, or 1-A + 1-B switching.
- Red, green, blue, white or yellow pushbuttons.
- Legends
- Other body colors
- ST-900 - Custom-molded to any of a large selection of cables. Also many cable terminations, i.e., phone plugs, extension jacks, phono plugs, spade lugs, alligator clips, stripped and tinned leads, etc.

DIMENSIONS ARE FOR REFERENCE ONLY Inch (mm)

* Please visit the product pages on our website for the most up-to-date product information

# MOLDED CABLE ASSEMBLIES WITH DIN PLUGS



## STYLES RA300 AND ST300

### APPLICATIONS

- Computer
- Data Communications
- Instrumentation
- Medical Systems
- Process Controls
- MIDI (Musical Instrument Digital Interface)

### FEATURES

- Long life
- 7 different pin configurations: versatile circuitry
- Fully molded plugs sealed against contamination (moisture, dust, dirt)
- Fully shielded: plugs with interference protection/ common ground-shield
- Strain relief: protects internal wire connections
- Flex relief: molded integral with handle for extra protection. No exit stress failures
- Locking: 30° twist locking for anti-vibration protection and ease of engagement
- Straight and coil cords: stock and custom styles, colors, lengths
- Shielded or unshielded cables: stock and custom styles, colors, lengths
- Molded through-panel cable relief: extra cable protection
- Custom wiring/ keying: gives extra choice in mounting and circuit selection
- Custom contact plating: precious and other metals
- Custom logo: your identification on molded plugs
- 100% tested for continuity, shorts, appearance, voltage breakdown (250 or 500 V)

### COMPLETE SHIELDING SYSTEMS

Switchcraft also offers shielded DIN receptacles for use with shielded molded cable assemblies. Together they provide a valuable design tool to suppress EMI interference to permit you to meet strict requirements of FCC Docket 20780.

### ORDERING

1. Order by part number from guide on page 251.
2. For special order items, contact Switchcraft with details.

**SPECIFYING NOTE:** See Connector Section of Switchcraft's Engineering Design Guide for mating receptacles.

**Style ST307**
**Termination Code: 307**

**Style ST324**
**Termination Code: 324**

**Style RA374**
**Termination Code: 374**

**Style RA356**
**Termination Code: 356**

Switchcraft DIN molded cable assemblies meet increased demand for modern, field-tested connections for a wide range of electrical/electronic applications. Connectors are DIN (Deutsche Industrie Norm) circular type, male or female (locking or non-locking) with 3 to 8 pins/contacts. Units are molded and protected with a rugged handle, and are fully shielded and equipped with advance design cable relief. Switchcraft cable assemblies and mating receptacles adhere to strict requirements of FCC Docket 20780 and offer fully shielded links for data and instrumentation applications of all kinds.

### SHIELDING EFFECTIVENESS

Effectiveness of shielding is frequency-dependent; as frequency increases, more shielding is required to maintain comparable shielding effectiveness. The chart below delineates shielding effectiveness with molded cable assemblies with 100% foil shield cables and shielded DIN connectors.

| Frequency Range MHz | Shielding Effectiveness, dB |
|---|---|
| 30-500 | -30 |
| 60-400 | -20 |
| 500-800 | -10 |

DIMENSIONS ARE FOR REFERENCE ONLY Inch (mm)



® Registered trademark of Switchcraft, Inc.
Note: Contact your Switchcraft Representative for price and delivery

* Please visit the product pages on our website for the most up-to-date product information

# MOLDED CABLE ASSEMBLIES WITH DIN PLUGS (continued)

## STYLES RA300 AND ST300 SPECIFICATIONS

### ELECTRICAL

**Contact Resistance:** Cord Plugs and Receptacles. .010 ohms, contact spring/pin; .030 ohms, ground clip/shell.
**Control and Switching Receptacles:** .015 ohms, contact spring/pin; .020 ohms, switch contacts.
**Dielectric Withstanding Voltage:** 500 V (rms).
**Leakage Resistance:** $10^5$ MΩ

### MECHANICAL

**Life:** 5000 cycles

| Insertion/Withdrawal Forces: | | |
|---|---|---|
| Number of Contacts | Insertion Force pound/N | Withdrawal Force pound/N |
| 2 | 3.6/(16) | .45–2.7/ (2–12) |
| 3 | 5.4/(24) | .67–4.1/ (3–18) |
| 4 | 7.2/(32) | .90–5.4/ (4–24) |
| 5 | 9.0/(40) | 1.24–6.8/ (5.5–30) |
| 6 | 10.8/(48) | 1.46–8.1/ (6.5–36) |
| 7 | 12.6/(56) | 1.68–9.5/ (7.5–42) |
| 8 | 14.4/(64) | 1.90–10.8/ (8.5–48) |

### PLUG MATERIALS

**Pin Contacts:** Silver-plated, copper alloy.
**Insulating Washer:** Thermoplastic.
**Locking Plug Housing:** Nickel-plated, die-cast zinc alloy.
**Other Housings:** Plated steel.
**Molded Handle:** Flexible thermoplastic. Strain relief matte finish.

**NOTE:** All connectors meet DIN specifications. Din specification numbers (except for 4-pin, 5-pin 240°) will be furnished on request.

### ORDERING

1. See table below for termination descriptions. Termination code is the same number as the plug style (e.g. termination code for a ST305 is 305).
2. See page 251 for ordering guide.

## PART NUMBERS – MOLDED CABLE ASSEMBLIES

| Part Number | Description | Term. A | Term. B |
|---|---|---|---|
| ◊305KD084184 | Black coil cord. 15" (381 mm) retracted; 78.74" (2 m) extended. 5 pin male with other end stripped and tinned on cable number W-1301-2. | ST305 | — |
| ◊305HJ084184 | Black cable cord. 7 feet (2.13 m) in length. 5 pin male with other end stripped and tinned on cable number W-1279-2. | ST305 | — |
| ◊306HK042306 | Black cable cord. 39.37" (1 m) in length. 6 pin male to 6 pin male on cable number W-1289-2. | ST306 | ST306 |
| ◊306HK084306 | Black cable cord. 78.74" (2 m) in length. 6 pin male to 6 pin male on cable number W-1289-2. | ST306 | ST306 |

◊ Special order only; contact Switchcraft.

## FOIL SHIELD CABLES – STRAIGHT

| Part Number | Color | Length, inch (mm) |
|---|---|---|
| W-1279-2 | Black | Length must be specified. |
| W-1289-2 | Black | |

| | Part Numbers-Male (pins) | | | | | | |
|---|---|---|---|---|---|---|---|
| | 3@180° | 4@210° | 5@180° | 5@240° | 6@240° | 7@270° | 8@270° |
| Pin Arrangements | B | D | F | E | G | H | N |
| Description | | | | | | | |
| Straight handle. | ST303 | ST309 | ST305 | ST304 | ST306 | ST307 | ST308 |
| Straight handle. 30° twist lock ring fastening, mates with lock flange plugs and receptacles. | ST323 | ST329 | ST325 | ST324 | ST326 | ST327 | ST328 |
| Right-angle handle. | RA353 | RA359 | RA355 | RA354 | RA356 | RA357 | RA358 |
| Right-angle handle. 30° twist lock ring fastening, mates with lock flange plugs and receptacles. | RA373 | RA379 | RA375 | RA374 | RA376 | RA377 | RA378 |

1. See next page for Pin/Contact arrangements.

DIMENSIONS ARE FOR REFERENCE ONLY Inch (mm)

* Please visit the product pages on our website for the most up-to-date product information

# MOLDED CABLE ASSEMBLIES WITH DIN PLUGS (continued)



## STYLES RA300 AND ST300

### ST300

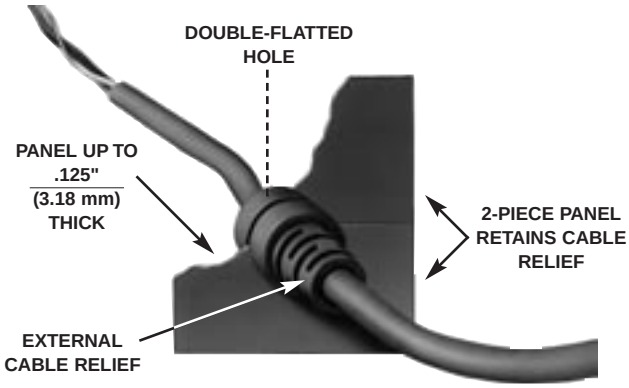


### CUTAWAY VIEW OF STYLE ST303

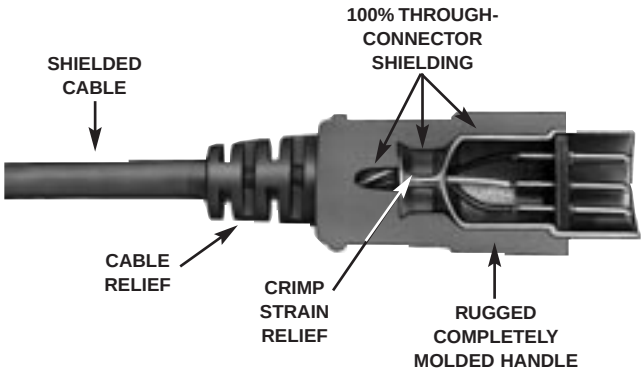


### Pin/Contact Arrangements

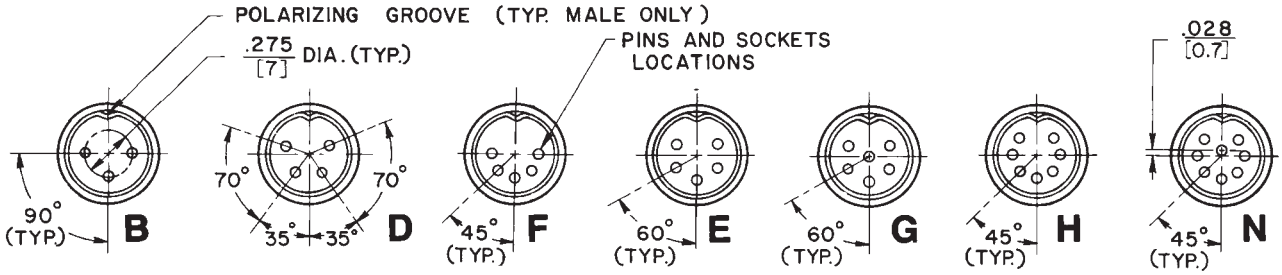


### STYLES ST303 TO ST309

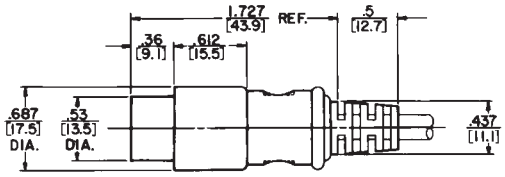


### STYLES ST323 TO ST329

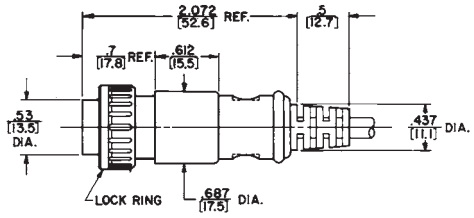


### STYLES RA353 TO RA359

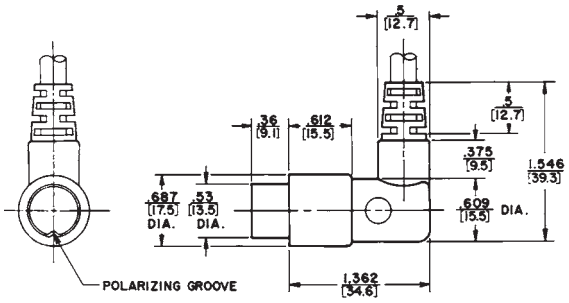


### STYLES RA373 TO RA379

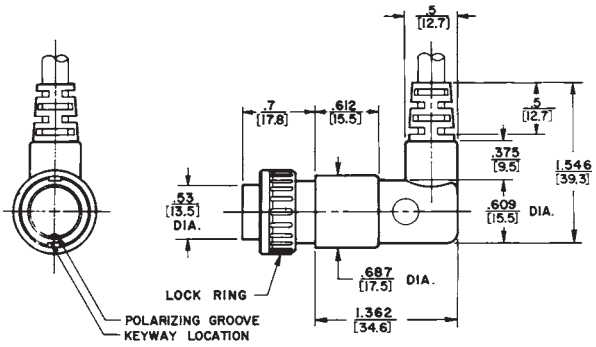


DIMENSIONS ARE FOR REFERENCE ONLY Inch (mm)



® Registered trademark of Switchcraft, Inc.
Note: Contact your Switchcraft Representative for price and delivery

* Please visit the product pages on our website for the most up-to-date product information

# MIDI CABLES

## FEATURES AND BENEFITS

- Molded connectors provide superior pull-out retention and greater environmental protection than assembled versions.
- All five pins wired active with high definition Belden Brilliance® cable.
- Can be used with any type MIDI instrument.

## SPECIFICATIONS

- Belden Brilliance® 24 awg, 4 conductor, braid shielded cable.
- Wiring conforms to MIDI specifications including the clock/sync capabilities on pins 1 and 3.
- Molded 180 degree 5 pin DIN connectors.
- Standard color is black with other colors available on special order.
- PVC molded handles and cable jackets.
- All molded cables are 100% tested for continuity, shorts and voltage breakdown.

## ORDERING INFORMATION

1. Order by part number.
2. Contact Switchcraft for more information.

Belden Brilliance® is a registered trademark of Belden Wire and Cable Company.

## MIDI CABLES

| Part number | Length | Color |
|---|---|---|
| MD3 | 3 foot | Black |
| MD6 | 6 foot | Black |
| MD10 | 10 foot | Black |
| MD15 | 15 foot | Black |

## STANDARD PRODUCT

- Silver-plated pins
- Belden Brilliance® 24 awg, 4 conductor, braid shielded cable
- Black cable
- Black handle

## SPECIAL ORDER

- Gold-plated pins
- Other cable types
- Optional lengths
- Color cable
- Color handle

DIMENSIONS ARE FOR REFERENCE ONLY Inch (mm)

* Please visit the product pages on our website for the most up-to-date product information

# MOLDED CABLE ASSEMBLIES WITH MINIATURE, SHIELDED, MOLDED TINI Q-G® PLUGS

## STYLE ST600

Tini Q-G® miniature plugs offer 3- through 6-pin/contact connecting with full shielding, small size, RFI-protected termination of analog/digital circuits/equipment. Typical applications are for EIA RS-232C and RS-449 type connections. Plugs retain all Tini Q-G® features, including latchlock, strain relief, flex relief, polarization and "scoop-proof" construction. See Connector Section for details on features and specifications. Shielding of these plugs meets U.S. Navy Tempest requirements with proper cable and mating connector choice.

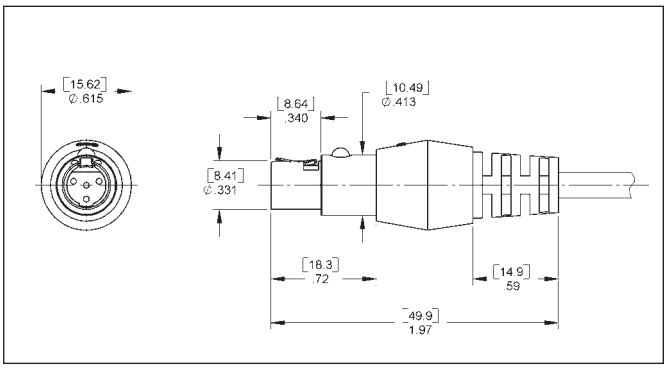


## MOLDED CABLES WITH STRAIGHT FEMALE

**Tini Q-G® PLUGS (Special Order Only)**

Three- through 6-contact plugs are molded into a complete cable assembly per customer requirements. Plug includes latch for secure connection, "through-ground" provision, and external cable flex relief. Plugs are molded onto shielded or unshielded cables of .180" – .215" diameter Standard cable color is gray; black, beige and other colors can also be specified. In addition, UL 94V-0 rated cables can be specified.

**Cable Length**

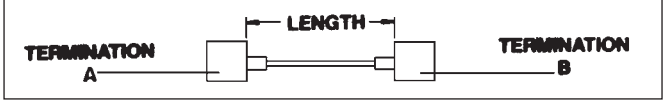


**Styles ST603, ST604, ST605, ST626**
**Termination Codes: 603, 604, 605, 626**

**Note: Reverse gender molded male cable assembly available. Call factory for details.**

**Contact Arrangements (Contact View)**

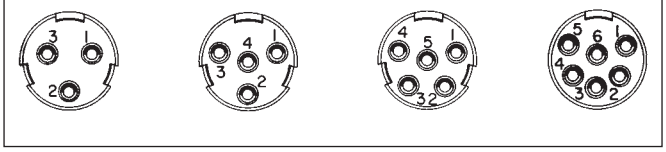


| Plug Style [2] | Description | Mating Receptacles [1] |
|---|---|---|
| ◊ST603 | 3-contact straight female plug (molded) | TA3M, TB3M |
| ◊ST604 | 4-contact straight female plug (molded) | TA4M, TB4M |
| ◊ST605 | 5-contact straight female plug (molded) | TA5M, TB5M |
| ◊ST626 | 6-contact straight female plug (molded) | TA6ML, TB6M |

1. See Connector Section of Switchcraft's Engineering Design Guide for other mating receptacles.
2. Termination code is the same as the numbers in the plug style (e.g. termination code for a ST626 is 626). See multi-pin ordering guide on next page.

## IMPORTANT SPECIFYING NOTE

◊ Special 3, 4 and 5 pin/contact patterns can be tooled on special order where production quantities warrant special handling. Contact Switchcraft with your requirements.

DIMENSIONS ARE FOR REFERENCE ONLY Inch (mm)


® Registered trademark of Switchcraft, Inc.
Note: Contact your Switchcraft Representative for price and delivery

FAX: 773 792-2129

* Please visit the product pages on our website for the most up-to-date product information

# MOLDED CABLE ASSEMBLIES FOR MULTI-PIN INTERCONNECTION PART NUMBERING SYSTEM (NOT ALL NUMBERS SHOWN)

1. Identify Terminations (both ends)*
2. Indicate Color and Type of Cable
3. Select the Length of Assembly

## MULTI-PIN CABLE ASSEMBLIES

| Termination | Color | Cable[1] | Length (feet) | Termination (examples) |
|---|---|---|---|---|
| 303 | G-Gray | A | 036 (3) | 3 0 3 |
| 304 | H-Black | B | 060 (5) | 3 0 4 |
| 305 | D-Beige | C | 072 (6) | 3 0 5 |
| 306 | | D | 120 (10) | 3 0 6 |
| 307 | | E | | 3 0 7 |
| 308 | | F | | 3 0 8 |
| 309 | | --- | | 3 0 9 |
| 603 | | G | | 6 0 3 |
| 604 | | H | | 6 0 4 |
| 605 | | J | | 6 0 5 |
| 606 | | K | | 6 2 6 |
| | | M | | 1 8 4 |
| | | --- | | 1 9 0 |
| | | Q | | |
| | | --- | | |
| | | U | | |

1. See next page for cable descriptions.
*** Please refer to page 243 for EN3™ weathertight connector options.**

**Note:**
• Other cables available on special order. Contact Switchcraft.

## TYPICAL PART NUMBERS

| STRAIGHT 3-pin DIN PLUG (#303) TO: | | | | |
|---|---|---|---|---|
| Termination (other end) | | Cable | Length (feet) | Part Number[2] |
| (3-pin DIN) | #303 | A | 5 | **303HA060303** |
| (3-pin Tini Q-G®) | #603 | A | 5 | **303HA060603[3]** |
| (Strip and tin) | #184 | A | 6 | **303HA072184** |
| (Blunt cut) | #190 | A | 6 | **303HA072190** |

2. All cables listed here are black.
3. .180" diameter.

## STANDARD MULTI-PIN CABLE ASSEMBLY TERMINATION VS. CABLE CROSS-REFERENCE

| | Cable | W1203 2 | W1089 1 | W1071 1 | W1206 # | W1276 | W1232 | W1291 6 | W1288 2 | W1279 # | W1289 # | W1290 # | W1284 2 | W1442 1 |
|---|---|---|---|---|---|---|---|---|---|---|---|---|---|---|
| TERMINATION | RA353 | X | | | | | | X | | | | | | |
| | RA354 | | | X | | | | | | X | | | X | |
| | RA355 | | | X | | | | | | X | | | X | |
| | RA356 | | | | X | | | | | | X | | | X |
| | RA357 | | | | | X | | | | | | | | |
| | RA358 | | | | | | X | | | | | X | | |
| | RA359 | | X | | | | | | X | | | | | |
| | RA373 | X | | | | | | X | | | | | | |
| | RA374 | | | X | | | | | | X | | | X | |
| | RA375 | | | X | | | | | | X | | | X | |
| | RA376 | | | | X | | | | | | X | | | X |
| | RA377 | | | | | X | | | | | | | | |
| | RA378 | | | | | | X | | | | | X | | |
| | RA379 | | X | | | | | | X | | | | | |
| | ST303 | X | | | | | | X | | | | | | |
| | ST304 | | | X | | | | | | X | | | X | |
| | ST305 | | | X | | | | | | X | | | X | |
| | ST306 | | | | X | | | | | | X | | | X |
| | ST307 | | | | | X | | | | | | | | |
| | ST308 | | | | | | X | | | | | X | | |
| | ST309 | | X | | | | | | X | | | | | |
| | ST323 | X | | | | | | X | | | | | | |
| | ST324 | | | X | | | | | | X | | | X | |
| | ST325 | | | X | | | | | | X | | | X | |
| | ST326 | | | | X | | | | | | X | | | X |
| | ST327 | | | | | X | | | | | | | | |
| | ST328 | | | | | | X | | | | | X | | |
| | ST329 | | X | | | | | | X | | | | | |
| | ST603 | X | | | | | | X | | | | | | |
| | ST604 | | X | | | | | | X | | | | | |
| | ST605 | | | X | | | | | | X | | | X | |
| | ST626 | | | | | | | | | | X | | | X |

# - Indicates any number
X - Indicates that the cable in this column and the termination in this row can be used together in a standard part number
1. - Other termination/cable combinations may be available or special order.

DIMENSIONS ARE FOR REFERENCE ONLY Inch (mm)

* Please visit the product pages on our website for the most up-to-date product information

## STANDARD MULTI-PIN INTERCONNECTION CABLES

FOR MOLDED CABLE ASSEMBLIES ON PAGES 243 THROUGH 251.

| Cable Type | Color | Description | Cable Code |
|---|---|---|---|
| W1203-2 | Black | 3 conductor, 22 AWG stranded, unshielded<br>.18" (4.6 mm) outside diameter, UL style 2960 | A |
| W1089-1 | Gray | 4 conductor, 22 AWG stranded, unshielded<br>.18" (4.6 mm) outside diameter, UL style 2960 | B |
| W1077-1 | Gray | 5 conductor, 22 AWG stranded, unshielded<br>.20" (5.1 mm) outside diameter, UL style 2464 | C |
| W1206-1<br>W1206-2 | Gray<br>Black | 6 conductor, 22 AWG stranded, unshielded<br>.20" (5.1 mm) outside diameter, UL style 2095 | D |
| W1277-6 | Beige | 7 conductor, 22 AWG stranded, unshielded<br>.20" (5.1 mm) outside diameter, UL style 2095 | E |
| W1237-2 | Black | 8 conductor, 22 AWG stranded, unshielded<br>.23" (5.8 mm) outside diameter, UL style 2464 | F |
| W1291-6 | Beige | 3 conductor, 24 AWG stranded, foil shielded<br>.18" (4.6 mm) outside diameter | G |
| W1288-2 | Black | 4 conductor, 24 AWG stranded, foil shielded<br>.18" (4.7 mm) outside diameter | H |
| W1279-1<br>W1279-2<br>W1279-6 | Gray<br>Black<br>Beige | 5 conductor, 24 AWG stranded, foil shielded<br>.19" (4.8 mm) outside diameter | J |
| W1289-2<br>W1289-6 | Black<br>Beige | 6 conductor, 24 AWG stranded, foil shielded<br>.22" (5.5 mm) outside diameter | K |
| W1290-1<br>W1290-6 | Gray<br>Beige | 8 conductor, 24 AWG stranded, foil shielded<br>.23" (5.7 mm) outside diameter | M |
| W1284-2 | Black | 5 conductor, 22 AWG stranded, braid shielded<br>.23" (5.8 mm) outside diameter | Q |

DIMENSIONS ARE FOR REFERENCE ONLY Inch (mm)


® Registered trademark of Switchcraft, Inc.
Note: Contact your Switchcraft Representative for price and delivery

* Please visit the product pages on our website for the most up-to-date product information

# MOLDED CABLE ASSEMBLIES
## With Micro Plug® Subminiature Phone Plugs

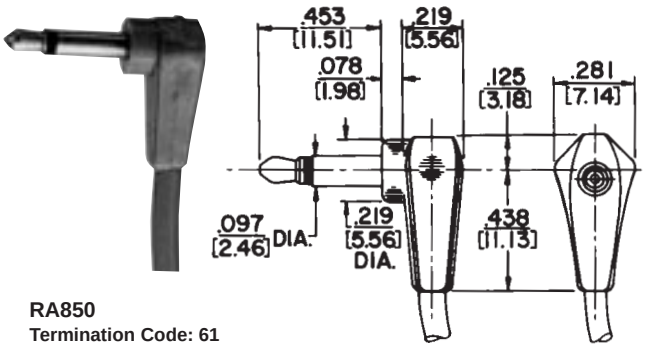


**RA850**
**Termination Code: 61**

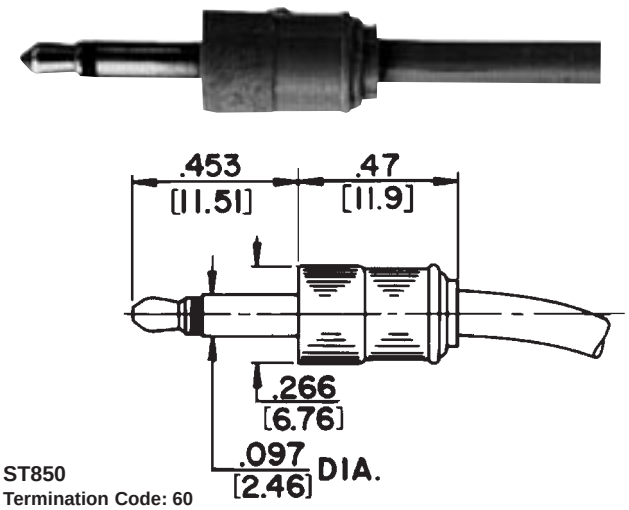


**ST850**
**Termination Code: 60**

### DESIGN FEATURES
- Thermoplastic insulation between tip and sleeve circuits.
- "Pear-shaped" one-piece tip rod.
- Cable clamp connects cable shield (or second conductor) to plug sleeve.

### SPECIFICATIONS
### PLUG
**Tip and Sleeve:** Plated copper alloy.
**Insulation:** W-1032-1. Molded thermoplastic.
**Sleeve Terminal:** Tinned copper alloy.
**Molded Handle:** Plastic.
**Standard Colors:** Gray, white, black, brown.
Other colors available on special order.

### CABLE
Standard Shielded Cable—Type W-1032-1.
**NOTE:** See Standard Cable Chart on page 260 for details.
Order by part number from guide on page 259.
**Special Cable:** We will build assemblies on cable furnished by you, .109" (2.77 mm) diameter maximum, or on cable we purchase to your specifications. Jacket must have temperature rating of 60° C minimum.
**RA850:** Right-angle Micro-Plug® plug with plastic handle. Short body extension. Molded to cables up to .109" (2.77 mm) outside diameter.
**ST850:** Straight Micro-Plug® plug, small plastic handle, only .47" (11.9 mm) long.
**NOTE:** Micro-Plug® molded cable assemblies mate with Switchcraft Micro-Jax® TR-2A.

DIMENSIONS ARE FOR REFERENCE ONLY Inch (mm)

* Please visit the product pages on our website for the most up-to-date product information

# MOLDED CABLE ASSEMBLIES With Tini Plug® Miniature Phone Plugs

**RA700**
**Termination Code: 50**

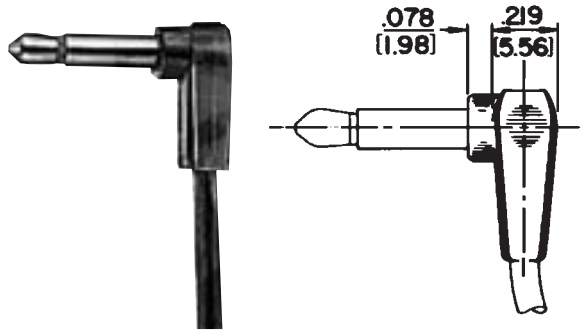


**RA710**
**Termination Code: 51**

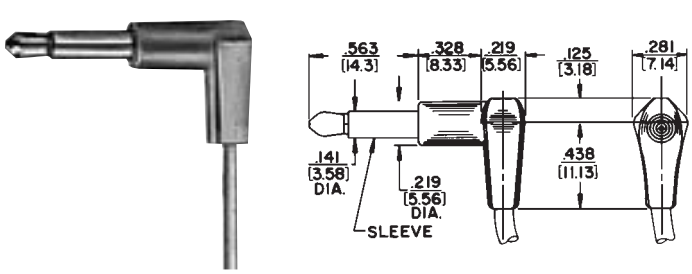


**ST740**
**Termination Code: 46**

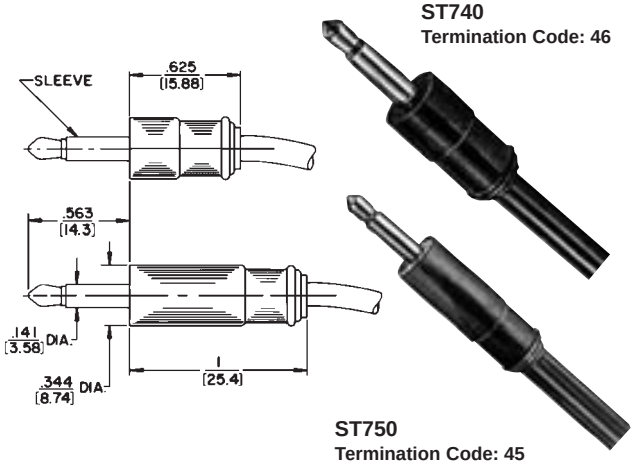


**ST750**
**Termination Code: 45**

**ST700**
**Termination Code: 41**

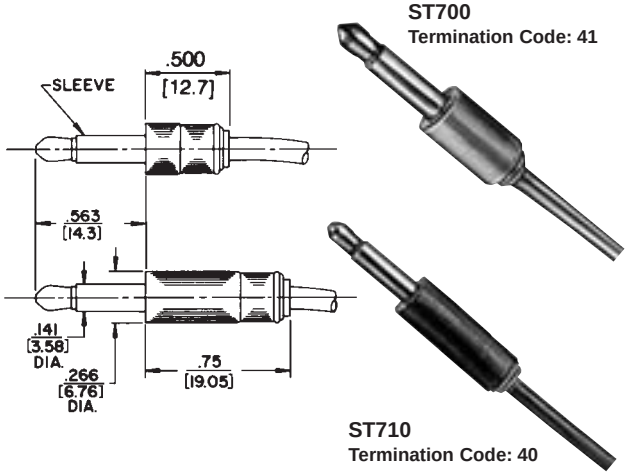


**ST710**
**Termination Code: 40**

## SPECIFICATIONS

### PLUG

**Tip and Sleeve:** Nickel-plated copper alloy.
**Cable Clamp:** Tin-plated steel.
**Insulation:** Rigid plastic.
**Molded Handle:** Plastic.
**Standard Colors:** Gray, white, black, brown.
Other colors available on special order.

### CABLE

Shielded—Type W-1000-1 (suitable for ST740 and ST750 due to cable Outside Diameter).
Shielded—Type W-1032-1 (suitable for all types on this page).
Standard Parallel—Type W-1041-1.

**NOTE:** See Standard Cable Chart on page 260 for details. Order by part number from guide on page 259.

**Special Cable:** We will build assemblies on cable furnished by you, up to .160" (4.06 mm) (for ST740 and ST750); .120" (3.05 mm) (for ST700, ST710, RA700, RA710) outside diameter, or on cable we purchase to your specifications. Jacket must have temperature rating of 60°C minimum.

## DESIGN FEATURES

- "Pear-shaped" one-piece tip rod soldered directly to cable conductor.
- Cable clamp connects cable shield (or second conductor) to the plug sleeve.

**RA700:** Right-angle Tini Plug® plug with small plastic handle. Short body extension, recommended for slightly recessed jacks. Molded to cables up to .109" (2.77 mm) outside diameter.

**RA710:** Right-angle Tini-Plug® plug similar to RA700, except longer body extension where equipment jack is deeply recessed. Molded to cables up to .109" (2.77 mm) outside diameter.

**ST700:** Straight Tini-Plug® plug offering the shortest and smallest handle.

**ST710:** Same as ST700, except with longer handle.

**ST740:** Straight Tini-Plug® with larger outside diameter handle desirable.

**ST750:** Straight Tini-Plug® with same diameter handle as ST740 and longer handle for easier handling.

DIMENSIONS ARE FOR REFERENCE ONLY Inch (mm)


® Registered trademark of Switchcraft, Inc.
Note: Contact your Switchcraft Representative for price and delivery

* Please visit the product pages on our website for the most up-to-date product information

# MOLDED CABLE ASSEMBLIES With Phono Plugs and Phono Extension Jacks

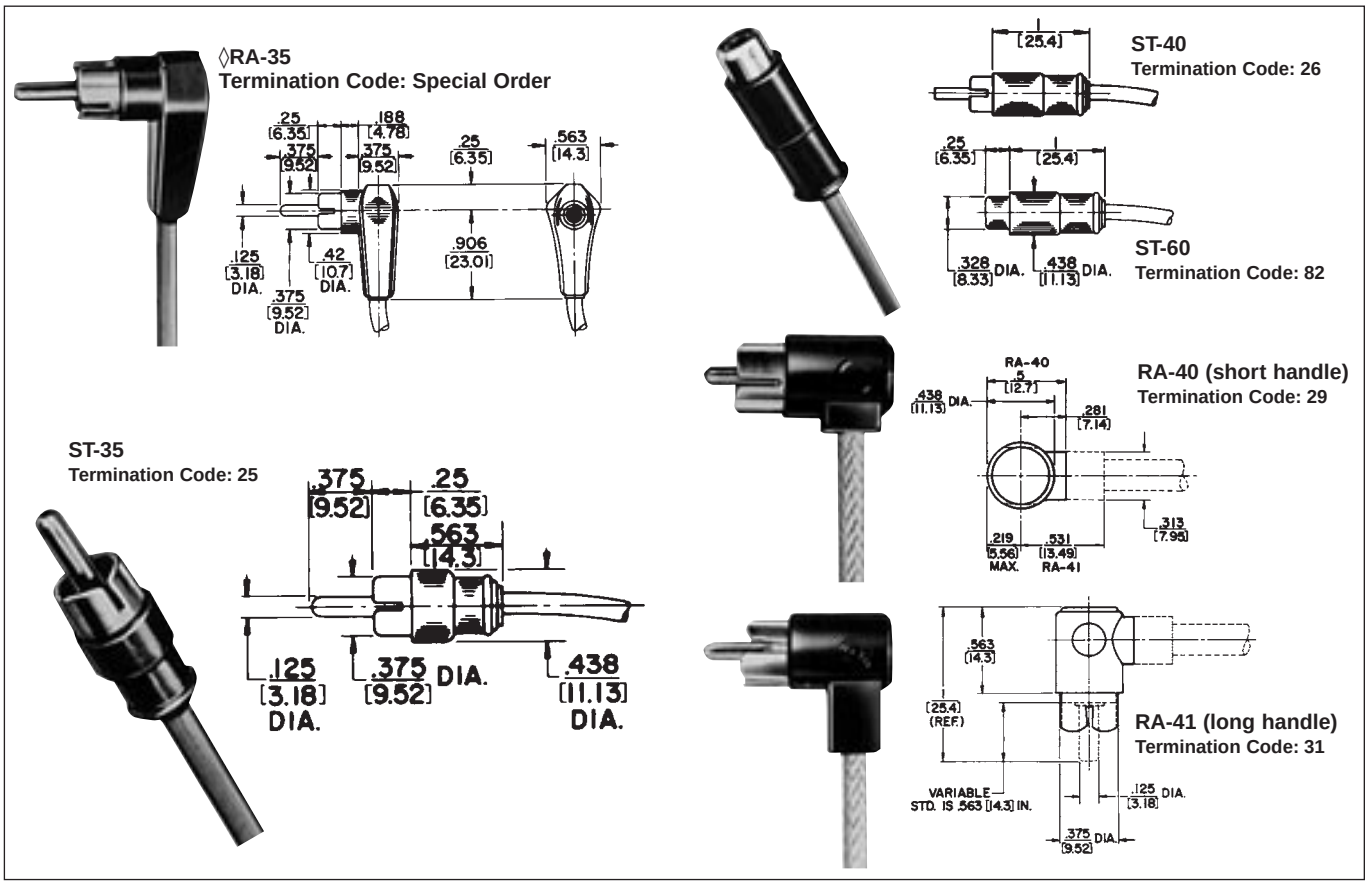


## SPECIFICATIONS

### PLUG

**Tip (prong):** Nickel-plated, copper alloy.
**Sleeve Connection:** Plated copper alloy.
**Insulation:** Rigid plastic or thermoplastic.
**Molded Handle:** Thermoplastic.
**Standard Colors:** Gray, black, brown, red, white, tan, or blue. Other colors available on special order.

### EXTENSION JAX

**Tip Spring:** Nickel-plated, hardened copper alloy.
**Sleeve Connection:** Plated steel.
**Insulation:** Rigid plastic.
**Molded Handle (both Plug and Jack):** Plastic.
**Standard Colors:** Gray, white, black and brown. Other colors available on special order.

### CABLES

**RA35, ST35, ST40, ST60:**
Standard Shielded Cable—Type W-1000-1.
Standard Parallel Cable (lamp cord)—Type W-1033-1.
**RA40, RA41:**
Standard Shielded Cable—Type W-1000-1 and W-1032-1.
Standard Unshielded (Parallel) Cable—Type W-1041-1.

**NOTE:** See Standard Cable Chart on page 260 for details. Order by part number from guide on page 259.

**Special Cable:** We will build assemblies on cable furnished by you (maximum diameter varies for types RA35, ST35, ST40) up to .20" (5.08 mm) outside diameter for RA40 and RA41 or on cable we purchase to your specifications. Jacket must have a temperature rating of 60 C minimum.

**◊RA35:** Right-angle phono plug with body extension for recessed jack. Cable: .188" (4.78 mm) outside diameter maximum. Completely shielded. (Available on special order only.)

**ST35:** Straight phono plug with “finger grip” handle. Handle .438" (11.13 mm) outside diameter. Completely shielded.

**ST40:** Straight phono plug, similar to ST35, except with longer handle.

**ST60:** Straight extension jack with “finger grip” handle. Handle .438" (11.13 mm) outside diameter. Completely shielded.

**RA40:** Compact right-angle phono plug with low profile, high quality insulation, and short .281" (7.14 mm) molded handle for audio and RF connections where space is at a minimum.

**RA41:** Same as RA40, except handle is .531" (13.49 mm) long.

## DESIGN FEATURES

- Can be specified with phenolic, nylon, glass-filled Teflon or polypropylene internal insulators. Polypropylene is recommended for RF connecting applications.
- Applications include stereo, PA and intercoms, audio-visual and telecommunications, including RF connections in 2-way radio and paging systems.

DIMENSIONS ARE FOR REFERENCE ONLY Inch (mm)

* Please visit the product pages on our website for the most up-to-date product information



## MOLDED CABLE ASSEMBLIES WITH TINI-EXTENSION® JACKS

### SPECIFICATIONS

**Housing (or Sleeve):** Nickel-plated, copper alloy.
**Handle:** Molded plastic.
**Sleeve Terminal:** Plated steel.
**Tip Spring:** Copper alloy.
**Insulation:** Rigid plastic. Larger design also has a molded thermoplastic insert.
**Standard Colors:** Gray white, black, brown. Other colors available on special order.

### CABLE

Standard Shielded: Type W-1032-1.
Standard Unshielded: Type W-1041-1.
**NOTE:** See Standard Cable Chart on page 260 for details. Order by part number from guide on page 259.

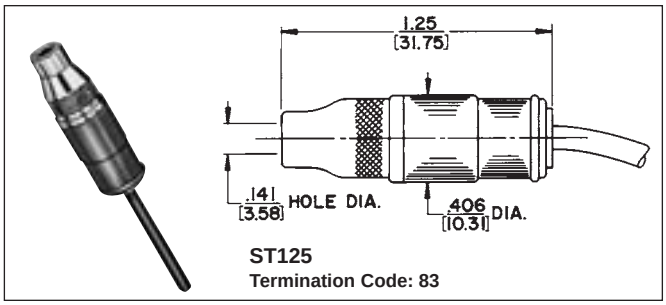


**Special Cable:** We will build assemblies on cable furnished by you, up to .160" (4.06 ram) outside diameter—or on cable we purchase to your specifications. Jacket must have temperature rating of 60° C minimum.

**ST125:** Straight Tini-Extension Jax jacks with same features as ST121, on next page (shielded, 2-conductor), except with .406" (10.31 mm) outside diameter, designed to mate with Switchcraft Tini-Plug® plugs.

## MOLDED CABLE ASSEMBLIES WITH LITTEL PLUG® PHONE PLUGS

### SPECIFICATIONS

### PLUG

**Tip:** Nickel-plated, copper alloy.
**Sleeve:** Plated copper alloy.
**Insulation:** Rigid plastic.
**Internal Shield:** Plated steel.
**Molded Handle:** Plastic.
**Standard Colors:** Gray, white, black and brown.
Other colors available on special order.

### CABLE

### FOR 2-CONDUCTOR PLUGS:

Standard Shielded Cable–Type W-1000-1.
Standard Parallel Cable (lamp cord)–Type W-1033-1.

### FOR 3-CONDUCTOR PLUGS:

Standard Shielded Cable–Type W-1021-1.

**NOTE:** See Standard Cable Chart on page 260 for details. Order by part number from guide on page 259.

**Special Cable:** We will build assemblies on cable furnished by you, .188" (4.78 mm) diameter maximum, or on cable we purchase to your specifications. Jacket must have a temperature rating of 60°C minimum.

### DESIGN FEATURES

- Molded cables with Littel-Plug phone plugs feature one-piece tip rod assembly connecting tip directly to the soldered connection of the cable conductor.
- Unusual dual-purpose clamp terminal provides completely shielded electrical connection and a cable clamp; connects plug sleeve to cable shield or conductor.
- Right-angle phone plugs (RA202, RA203, RA207 and RA208) molded to cables up to .188" (4.78 mm) outside diameter. RA202, RA203, RA207 and RA208 molded to cables with maximum outside diameter up to .260" (6.6 mm).

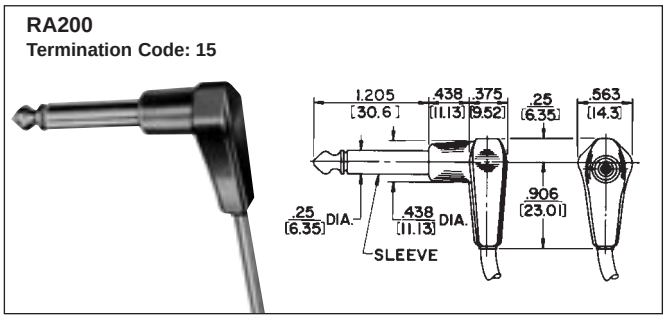


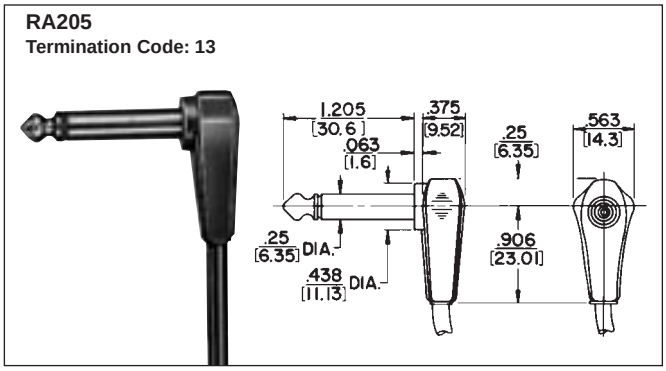


**RA200:** Right-angle phone plug with plastic handle. Body extension suitable for recessed jack. Completely shielded.

**RA205:** Right-angle phone plug, similar to RA200, except short body extension and handle for flush mounted jacks.

DIMENSIONS ARE FOR REFERENCE ONLY Inch (mm)



® Registered trademark of Switchcraft, Inc.
Note: Contact your Switchcraft Representative for price and delivery

* Please visit the product pages on our website for the most up-to-date product information

## MOLDED CABLE ASSEMBLIES WITH LITTEL PLUG® PHONE PLUGS (continued)

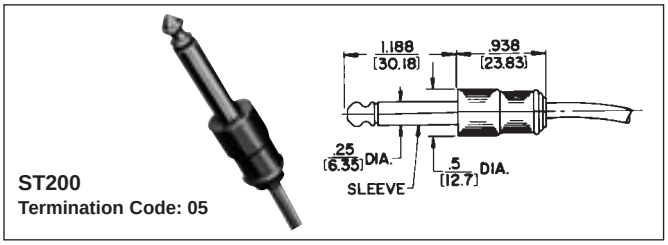


**ST200**
**Termination Code: 05**

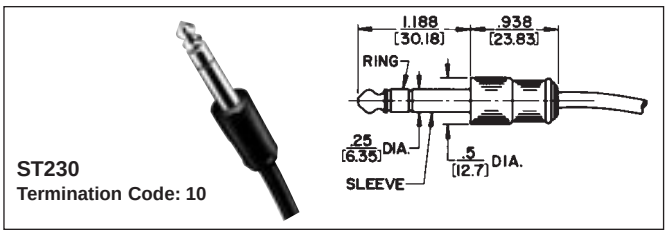


**ST230**
**Termination Code: 10**

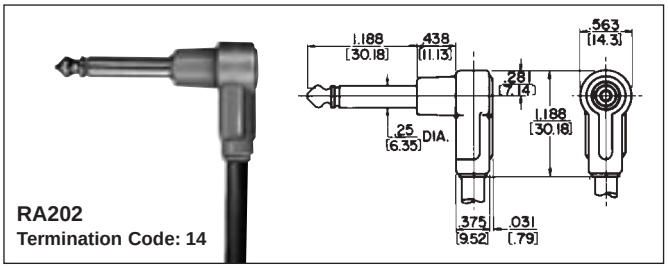


**RA202**
**Termination Code: 14**

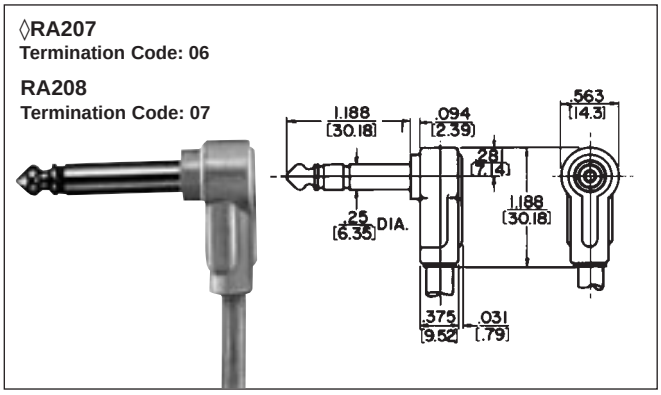


**◊RA207**
**Termination Code: 06**

**RA208**
**Termination Code: 07**

**RA202:** Right-angle phone plug with plastic handle. Body extension suitable where jack is recessed. RA203 is similar to RA202, except 3-conductor plug.

**◊RA207, RA208:** Right-angle phone plug, similar to RA202, except short body extension. Recommended use with panel mounted jacks. RA208 is similar to RA207, except 3-conductor plug.

**◊RA217:** Special right-angle phone plug, identical to RA200 (previous page); also featuring a unique hook for hanging various types of equipment (such as pillow speakers). Completely shielded. Available on special order only.

**ST200:** Straight phone plug with "finger grip" handle, but short enough to fit in all equipment.

**ST230:** Straight 3-conductor phone plug; same features as ST200. Completely shielded.

## MOLDED CABLE ASSEMBLIES WITH EXTENSION JAX® PHONE JACKS

**ST121, ST131**
**Termination Code: 80, 81**

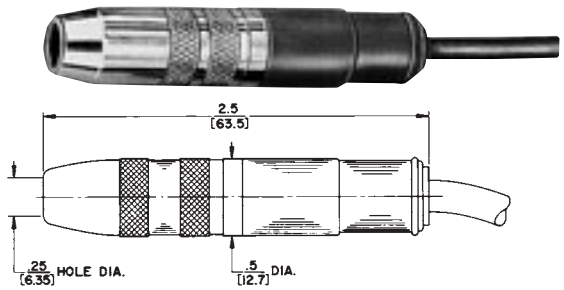


**ST121:** Straight Extension Jax® jack is a shielded 2-conductor jack with .50" (12.7 mm) outside diameter. Cable clamp connects shield or second conductor to cable. Mates with .25" (6.35 mm) diameter Switchcraft 2-conductor plugs.

**ST131:** Straight Extension Jax jack, same as ST121, except 3-conductor. Mates with .25" (6.35 mm) diameter Switchcraft 3-conductor plugs.

### SPECIFICATIONS

**Housing (or Sleeve):** Nickel-plated, copper alloy.
**Handle:** Molded plastic.
**Sleeve Terminal:** Plated steel.
**Tip and Ring Springs:** Copper alloy.
**Insulation:** Rigid plastic. Larger design also has a molded thermoplastic insert.
**Standard Colors:** Gray, white, black, brown.
Other colors available on special order.

### CABLE

Standard Shielded–Type W-1000-1 (for ST121).
Type W-1021-1 (for ST131).
Standard Unshielded–Type W-1033-1 (for ST121).

**NOTE:** See Standard Cable Chart on page 260 for details. Order by part number from guide on page 259.

**Special Cables:** We will build assemblies on cable furnished by you, up to .260" (6.6 mm) outside diameter, or on cables we purchase to your specifications. Jacket must have temperature rating of 60° C minimum.

DIMENSIONS ARE FOR REFERENCE ONLY Inch / (mm)

* Please visit the product pages on our website for the most up-to-date product information



## MOLDED CABLE ASSEMBLIES WITH CABLE CLAMP BANDS

### SPECIFICATIONS
### MOLDED BAND

**Housing:** Plastic. Inserts can be added to our molds to include customer's name or trademark. Call for details.
**Standard Colors:** Gray, white, black, brown. Other colors available on special order.

### CABLE*

Standard Parallel Cable (lamp cord)–Type W-1033-1.
Standard Shield Cable–Type W-1072.

### ST-91 DESIGN FEATURES

- For use on stereo connecting cables and on monaural and stereo headset cables.
- Prevents further separation of individual leads on "Rip" type cordage.
- Can be used as "Y" junction when used with standard shielded cable such as Switchcraft W-1072; or as a cable clamp for general purpose with Switchcraft W-1033 and W-1050.
- Special assemblies can be built to OEM needs, using various terminal lugs, special receptacles to phone plugs or connectors.

ST91
Termination
Code: 94

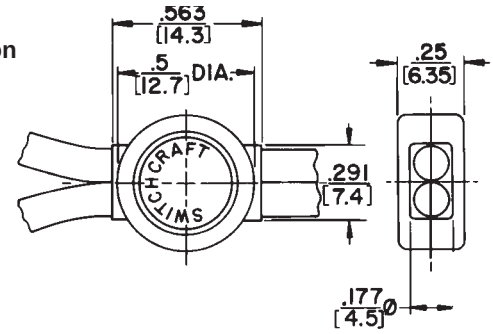


***NOTE:** See Standard Cable Chart on page 260 for details.

**Special Cable:** We will build assemblies on cable furnished by you (maximum diameter varies for types) or on cables we purchase to your specifications. Jacket must have temperature rating of 60°C minimum.

## MOLDED CABLE ASSEMBLIES WITH "Y" JUNCTIONS

### SPECIFICATIONS
### Y JUNCTION

**Housing:** Molded Plastic. Inserts can be added to our molds to include customer's name or trademark.
**Standard Colors:** Gray, white, black, brown. Other colors available on special order.

### CABLE*

Standard Shielded Cable–Type W-1000-1.
Standard Shielded Cable–Type W-1021-1.

### ST-90 DESIGN FEATURES

- For use on binaural and stereophonic headphones.
- Accommodates 1- and 2-conductor shielded cables.
- Durable, strain and humidity resistant.
- Special assemblies can be built to OEM needs, using terminal lugs, special receptacles to phone plugs or connectors.

ST90
Termination
Code: 93

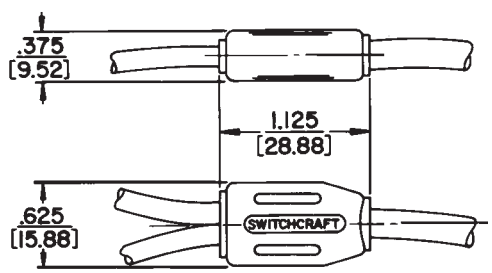


**Larger "Molded Y" available. Ask for ST94.**

DIMENSIONS ARE FOR REFERENCE ONLY Inch (mm)



® Registered trademark of Switchcraft, Inc.
Note: Contact your Switchcraft Representative for price and delivery

* Please visit the product pages on our website for the most up-to-date product information

# MOLDED CABLE ASSEMBLIES PART NUMBERING SYSTEM

## TO CREATE A PART NUMBER

1. Identify Terminations (both ends)
2. Indicate Color and Type of Cable
3. Select the Length of Assembly

## MOLDED CABLE ASSEMBLIES (Not all numbers shown)

| Termination | | Color | Cable* | Length (feet) | | | Termination | |
|---|---|---|---|---|---|---|---|---|
| 0 | 5 | G-Gray | A | 0 | 1 | 8 (1.5) | 0 | 5 |
| 1 | 5 | H-Black | B | 0 | 2 | 4 (2) | 1 | 5 |
| 2 | 5 | D-Beige | C | 0 | 3 | 6 (3) | 2 | 5 |
| 4 | 0 | W-White | D | 0 | 4 | 8 (4) | 4 | 0 |
| 8 | 0 | | E | 0 | 7 | 2 (6) | 8 | 0 |
| 8 | 2 | | F | 1 | 2 | 0 (10) | 8 | 2 |
| 8 | 3 | | K | | | | 8 | 3 |
| 9 | 9 | | V | | | | 8 | 4 |
| | | | W | | | | | |
| | | | X | | | | | |
| | | | Y | | | | | |
| | | | Z | | | | | |

* See “Cable Types” chart on page 260.

**Notes:**

- Use any 2-number codes on previous pages for termination number.
- Some configurations will be special orders. Contact Switchcraft.
- Some configurations may not be possible.
- Larger plug (#45) will be supplied in place of #40 when used with cable “A”.

### TYPICAL STANDARD PART NUMBERS

| Termination (other end) | Cable | Length (feet) | Part Number[1] |
|---|---|---|---|
| **STRAIGHT 2-CONDUCTOR PHONE PLUG (#05) TO:** | | | |
| (phono plug) #05 | A | 6 | **05HA07205** |
| (stripped wires) #84 | A | 3 | **05HA03684** |
| **PHONO PLUGS (#25) TO:** | | | |
| (phono jack) #82 | A | 6 | **25HA07282** |
| **DUAL PHONO PLUGS (#25) TO:** | | | |
| (dual phono jacks) #82 | F | 10 | **25HF12082** |
| **3.5mm MINIATURE PLUG (#40) TO:** | | | |
| (3.5 mm plug) #40 | D | 6 | **40HD07240** |

1. All cables listed here are black.

DIMENSIONS ARE FOR REFERENCE ONLY Inch (mm)

* Please visit the product pages on our website for the most up-to-date product information

# STANDARD CABLE GUIDE
## FOR MOLDED CABLE ASSEMBLIES ON PAGE 253 THROUGH 259

| Cable Type | Color | Description | Cable Code |
|---|---|---|---|
| W1000<br>W1000-1<br>W1000-2 | Beige<br>Gray<br>Black | 50Ω coax, plastic jacket over spiral shield with 22 AWG stranded center conductor; .156" (3.96 mm) outside diameter. Average capacity 31 pF/feet, UL style 1354 | A |
| W1021-1<br>W1021-1 | Gray<br>Black | 2 conductor, plastic jacket over shield with 2, 22 AWG conductor; .20" (5.2 mm) outside diameter. Average capacity 20 pF/feet between conductor; 55 pF/feet between shorted conductor to shield; 32 pF/feet each conductor to shield, UL style 2092 | B |
| W1013-1<br>W1013-2 | Gray<br>Black | 2 conductor, plastic unshielded parallel with 2, 18 AWG stranded conductor; .11" (2.8 mm) x .21" (5.3 mm) outside diameter, UL type SPT-1 | K |
| W1032-1<br>W1032-2 | Gray<br>Black | 48Ω coax, plastic jacket over spiral shield with 25 AWG stranded center conductor; .11" (2.8 mm) outside diameter. Average capacity 35 pF/feet | D |
| W1041-1<br>W1041-2 | Gray<br>Black | 2 conductor, plastic unshielded tandem cable with 2, 24 AWG stranded conductor; .06" (1.5 mm) x .12" (2.9 mm) | Y |
| W1065-2 | Black | 50Ω coax, plastic jacket over braid shield with 26 AWG stranded center conductor; .1" (2.5 mm) outside diameter. Average capacity 30 pF/feet, RG-174 | E |
| W1072-1 | Gray | 2 conductor, twin coax, plastic jacket over 2 individually shielded 25 AWG parallel conductor. Average capacity 36 pF/feet, recommended for headset applications | F |
| W1230-1<br>W1230-4<br>W1230-5 | Gray<br>Beige<br>White | 2 conductor,plastic unshielded with 2, 18 AWG stranded conductor; .25" (6.4 mm) outside diameter, UL type SVT | V |
| W1243-2 | Black | 75Ω coax, plastic jacket over shield with 27 AWG stranded center conductor; .15" (3.8 mm) outside diameter. Average capacity 20.5 pG/feet, UL style 1354 or 1436 | X |
| W1033-1<br>W1033-2 | Gray<br>Black | 2 conductor, plastic unshielded parallel with 2, 20 AWG stranded conductor; .10" (2.54 mm) x .19" (4.7 mm) outside diameter, UL style 2433 | C |
| W1096-2 | Black | 2 conductor, plastic unshielded parallel with 2, 22 AWG stranded conductor; .08" (1.9 mm) x .15" (3.8 mm) outside diameter | Z |

**See page 251 for Cable Assembly Termination vs. Cable Cross Reference Table.**




® Registered trademark of Switchcraft, Inc.
Note: Contact your Switchcraft Representative for price and delivery

FAX: 773 792-2129

* Please visit the product pages on our website for the most up-to-date product information

# CROSS REFERENCE GUIDE

**STANDARD CABLE ASSEMBLY TERMINATION vs. CABLE CROSS-REFERENCE**

| | | Cable | | | | | | | | | | |
|---|---|---|---|---|---|---|---|---|---|---|---|---|
| | | W1003# | W1021 | W1013# | W1032# | W1041# | W1065 2 | W1072 1 | W1230# | W1243 2 | W1033# | W1096 2 |
| TERMINATION | RA40 | X | | X | X | 1 | 1 | 2 | | X | X | 1 |
| | RA41 | X | | X | 1 | 1 | 1 | 2 | | X | X | 1 |
| | RA200 | X | | X | 1 | 1 | X | 2 | | X | 1 | 1 |
| | RA202 | X | | X | 1 | | | 2 | X | X | 1 | 1 |
| | RA205 | X | | X | 1 | 1 | X | | | | 1 | |
| | RA207 | X | | X | 1 | | | 2 | X | X | 1 | 1 |
| | RA700 | | | | X | X | X | 2 | | | | |
| | RA710 | | | | X | X | X | 2 | | | | |
| | RA712A | | | X | | | | | | | 1 | 1 |
| | RA722A | | | X | | | | | | | 1 | 1 |
| | RA760 | X | | X | X | 1 | 1 | 2 | X | X | X | X |
| | RA765 | X | | X | X | 1 | 1 | 2 | X | X | X | X |
| | RA850 | | | | X | X | X | 2 | | X | | X |
| | ST35 | X | X | X | X | 1 | X | 2 | | X | X | 1 |
| | ST40 | X | | X | 1 | 1 | 1 | 2 | | X | X | 1 |
| | ST60 | X | | X | 1 | 1 | 1 | 2 | | X | X | 1 |
| | ST121 | X | | X | 1 | | 1 | 2 | X | X | X | 1 |
| | ST123 | | | | X | X | X | 2 | | | | 3 |
| | ST125 | X | | | X | X | X | 2 | | X | | X |
| | ST131 | | X | | | | | | | | | |
| | ST200 | X | | X | 1 | 1 | X | 2 | X | X | 1 | 1 |
| | ST230 | | X | | | | | | | | | |
| | ST700 | | | | X | X | X | 2 | | | | X |
| | ST710 | | | | X | X | X | 2 | | | | X |
| | ST740 | X | | X | 1 | 1 | 1 | 2 | | X | X | X |
| | ST750 | X | | X | 1 | 1 | 1 | 2 | | X | X | X |
| | ST760 | X | | | X | 1 | 1 | 2 | | X | X | 1 |
| | ST760L | | | X | | | | | X | | | |
| | ST765 | X | | | X | 1 | 1 | 2 | | X | X | 1 |
| | ST765L | | | X | | | | | X | | | |
| | ST850 | 3 | | 3 | X | X | X | 2 | | 3 | 3 | 3 |
| | ST900 | X | X | X | 1 | 1 | 1 | | X | X | X | X |

# - Indicates any number.
X - Indicates that the cable in this column and the termination in this row can be used together in a standard part number.
1 - These cable assemblies may use heat shrink tubing under overmolded terminations.
2 - These cable assemblies have two of the same termination at one end. Each termination is molded in a different color.
3 - These cable assemblies use a larger overmold than is pictured in the Engineering Design Guide.
4 - Other termination/cable combinations may be available on special order.

DIMENSIONS ARE FOR REFERENCE ONLY Inch (mm)

* Please visit the product pages on our website for the most up-to-date product information

## 1/4" TELEPHONE PATCH CORDS

Switchcraft premium 3-conductor single patch cords are designed for rugged, noise-free performance. **Nickel-plated** plugs eliminate the need for periodical cleaning which keeps your audio signals clear. Color cords provide instant visual identification with a choice of three lengths. All cables are fully shielded with rugged, braided thermoplastic outer jackets. Plug handles are black. Audio patch cords are available with other lengths and brass plugs, if desired. Contact Switchcraft for specifying assistance and cable length tolerances.

SERIES 20Q

## MIL TYPE 1/4" PATCH CORDS

Switchcraft Patch Cords are available in a variety of types to meet requirements of communication, industrial and telephone switchboard applications. Patch cords are constructed of high quality bronze tinsel covered with thermoplastic insulating material with braided shield and black thermoplastic braid woven over the insulated conductors.

Switchcraft MIL-type Littel-Plug® and Twin-Plug® phone plugs with brass finish are attached to these quality cords. Design and material used in strict accordance with Specification MIL-P-642(A). Cords have an identifying label on cord and hot stamping on plug handle.

### SERIES 20Q 3-CONDUCTOR TELEPHONE-TYPE PATCH CORDS

1/4" diameter plug fingers, black handle, color cable

**PART NUMBERING SYSTEM**

| 2 0 | Q | | 2 0 | | |
|---|---|---|---|---|---|
| **PLUG** | **CABLE** | **LENGTH*** | **PLUG** | **FINGER FINISH** | **CABLE COLOR*** |
| 3-cond. | Shielded 2-cond. nylon-braid sheath | D - 2'<br>F - 3'<br>H - 4' | 3-cond. | N-Nickel plated<br>B-Natural brass | 0-Black<br>2-Red<br>5-Green<br>6-Blue |

* Contact Switchcraft for other lengths and colors.

SERIES 18Q
Red handle, brass finger

**SERIES 18Q:** Used in broadcasting, studio recording, sound, and other applications where space is at a premium. Utilizes Series 88Q 2-conductor shielded cord, with a Switchcraft 482 Littel-Plug phone plug with red handle (PJ-051) connected to each end. Shield grounded to sleeve of both plugs, and two leads wired tip-to-tip, ring-to-ring. Standard cord color: black. Other lengths and colors: gray, red, green (special order). Series 18Q provides same or greater number of circuits in a given space than cords using "Twin-Plug" dual telephone plugs.

| Length feet (m) | Series 18Q, Plug Type 482 | |
|---|---|---|
| | Part Number | Replacement Cord Used |
| 0.5 (.152) | **18QA18** | 89QA89 |
| 1 (.305) | **18QB18** | 89QB89 |
| 2 (.610) | **18QD18** | 89QD89 |
| 3 (.914) | **18QF18** | 89QF89 |
| 4 (1.219) | **18QH18** | 89QH89 |
| 6 (1.829) | **18QK18** | 89QK89 |
| 10 (3.048) | **18QN18** | — |

DIMENSIONS ARE FOR REFERENCE ONLY Inch (mm)


® Registered trademark of Switchcraft, Inc.
Note: Contact your Switchcraft Representative for price and delivery

* Please visit the product pages on our website for the most up-to-date product information

## COMBINATION PATCH CORDS

CPC102A

Series CPC Combination Patch Cords provide convenient interconnections between standard telephone-type jacks (3-conductor, .25" inside diameter sleeve) and miniature telephone-type jacks (3-conductor, .173" inside diameter). Series CPC cords are ideal for connection in telephone, data processing and other telecommunication applications where both standard and miniature jacks are available for patching.

### FEATURES

1. Rugged, telephone-quality tinsel conductors, with slate gray, braided thermoplastic jacket with flex relief reinforcements at point of entry into each plug handle.
2. Series CPC cords, eliminates the need for a separate adapter or field-fabricated combination cords.
3. Switchcraft (on special order) can assemble cords of any practical length.

◊ **SERIES CPC101:** Standard 2-conductor, 413 Twin-Plug (.25" outside diameter finger) on one end; miniature, 3-conductor TT253, TT Twin-Plug (.173" outside diameter finger) on the other end. One twin plug tip to miniature plug ring. All sleeves connected to cable shield. 6, 10, 15, 20 and 25 foot lengths.

◊ **SERIES CPC103:** Standard 2-conductor, 413 Twin-Plug (.25 " outside diameter finger) on one end with cable-connected shield to sleeve; two independent tip circuits. Other end miniature, TT261, TT Twin-Plug (.173" outside diameter finger) in the same wiring. 6, 10, 15, 20 and 25 foot lengths.

◊ **SERIES CPC104:** Standard 3-conductor, 414 Twin-Plug (.25 " outside diameter finger) on one end; miniature 3-conductor, TT263, TT Twin-Plug on other end. Wired at 5-conductor tips-to-tips, rings-to-rings, all sleeves to cable shield. 6, 10, 15, 20 and 25 foot lengths.

| Part Number | Length | Description |
|---|---|---|
| ◊CPC102A | 6 inches | Standard 3-conductor (483) telephone plug (.25" outside diameter finger) on one end; miniature (253) tini-telephone® 3-conductor (.173" outside diameter. finger) plug on other end.(See Schematic). |
| ◊CPC102D | 2 feet | |
| ◊CPC102F | 3 feet | |
| ◊CPC102K | 6 feet | |
| ◊CPC102N | 10 feet | |
| ◊CPC102R | 15 feet | |
| ◊CPC102T | 20 feet | |
| ◊CPC102U | 25 feet | |

◊ Special order only; contact factory for price and delivery.

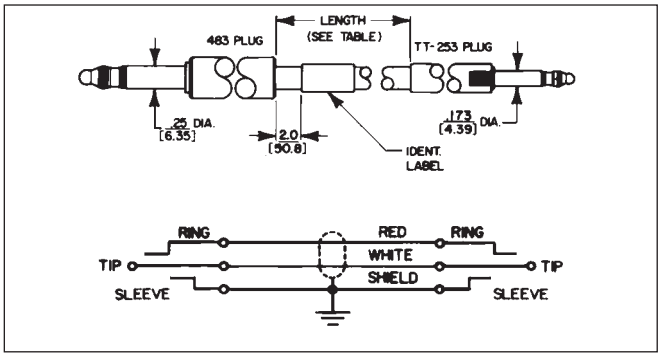


## MIL-TYPE 1/4" TWIN PATCH CORDS

Series 22Q

**SERIES 22Q:** For use in telephone patching, broadcasting, studio recording, high-quality public address systems, telephone, telecommunications, and instrumentation systems. Uses 4-conductor shielded cord with Switchcraft Number 414 Twin-Plug® connected to each end. Shield is grounded to sleeve of each plug and individual leads wired tip-to-tip and ring-to-ring. Twin-Plug 414 is a 6-circuit plug with electrically independent tip circuits and ring circuits, with plug fingers spaced on .625" center to fit standard twin jacks. A self-aligning feature accommodates errors in jack location. Standard lengths: 1 feet to 10 feet; standard color: black. Other lengths and colors are available.

| Part Number | Length, feet (m) |
|---|---|
| ◊22QB22 | 1 (.305) |
| ◊22QD22 | 2 (.610) |
| ◊22QF22 | 3 (.914) |
| ◊22QK22 | 6 (1.829) |
| ◊22QN22 | 10 (3.048) |

◊ Special order only; contact factory for price and delivery.

DIMENSIONS ARE FOR REFERENCE ONLY Inch (mm)

* Please visit the product pages on our website for the most up-to-date product information

# MINIATURE TT® BRAIDED PATCH CORDS

TT720
Single, 2-Conductor

TT740
Single, 3-Conductor

TT860
Twin, 3-Conductor

## CABLE AND PLUG FINGER COMBINATIONS

**2-Conductor Patch Cord**. Two-conductor Bantam-Type® plug, Switchcraft TT251 at each end. Shield (75% coverage) is grounded to each plug sleeve. Tinsel conductor is wired tip-to-tip. Standard color: black. Other colors and lengths are available on special order.

| Part Number | Description | Length, feet (m) |
|---|---|---|
| ◊TT722 | 2-conductor single, brass finish on plug fingers, black handle and cord. Identifying label on cord. | 1 (.305) |
| ◊TT724 | | 2 (.61) |
| ◊TT726 | | 3 (.914) |
| ◊TT727 | | 4 (1.219) |
| ◊TT728 | | 5 (1.524) |
| ◊TT729 | | 6 (1.829) |

**3-Conductor Patch Cord.** 3-conductor Bantam-Type plug (Switchcraft TT253) at each end. Wiring is the same as TT724, except also has ring-to-ring wiring.

| Part Number | Description | Length, feet (m) |
|---|---|---|
| ◊TT741 | 3-conductor single, brass finish on plug fingers, black handle and cord. Identifying label on cord. | 0.5 (.152) |
| ◊TT742 | | 1 (.305) |
| ◊TT744 | | 2 (.61) |
| ◊TT746 | | 3 (.914) |
| ◊TT747 | | 4 (1.219) |
| ◊TT748 | | 5 (1.524) |
| ◊TT749 | | 6 (1.829) |

| Part Number | Description1, 2 | Length, feet (m) |
|---|---|---|
| ◊TT741N0 | 3-conductor single, nickel-plated plug fingers (brass available) black handles and cord. | 0.5 (.152) |
| ◊TT742N0 | | 1 (.305) |
| ◊TT744N0 | | 2 (.61) |
| ◊TT746N0 | | 3 (.914) |
| ◊TT747N0 | | 4 (1.219) |

**3-Conductor Twin Patch Cords.** 5-circuit patch cords use two 3-conductor twin Bantam-Type plugs, Switchcraft TT-263, at each end. Sleeve circuits are wired common, and tinsel conductors are wired tip-to-tip and ring-to-ring (see schematic). Polarizing handle notches indicated plug fingers with interconnected tip and rings. Standard color: black. Other colors and lengths are available on special order.

| Part Number | Description | Length, feet (m) |
|---|---|---|
| ◊TT861 | 3-conductor twin, brass finish on plug fingers, black handle and cord. Identifying label on cord. | 0.5 (.152) |
| ◊TT862 | | 1 (.305) |
| ◊TT864 | | 2 (.61) |
| ◊TT866 | | 3 (.914) |
| ◊TT867 | | 4 (1.219) |
| ◊TT868 | | 5 (1.524) |
| ◊TT869 | | 6 (1.829) |

1. For brass fingers, substitute "B" for "N" in part number. Special order only.
2. "0" in part number denotes black handle and cord. Substitute the following for "0" to specify other color cords:
   2–Red 5–Green 6–Blue

◊ Special order only; contact Switchcraft for prices and delivery.

## CABLE AND PLUG FINGER COMBINATIONS

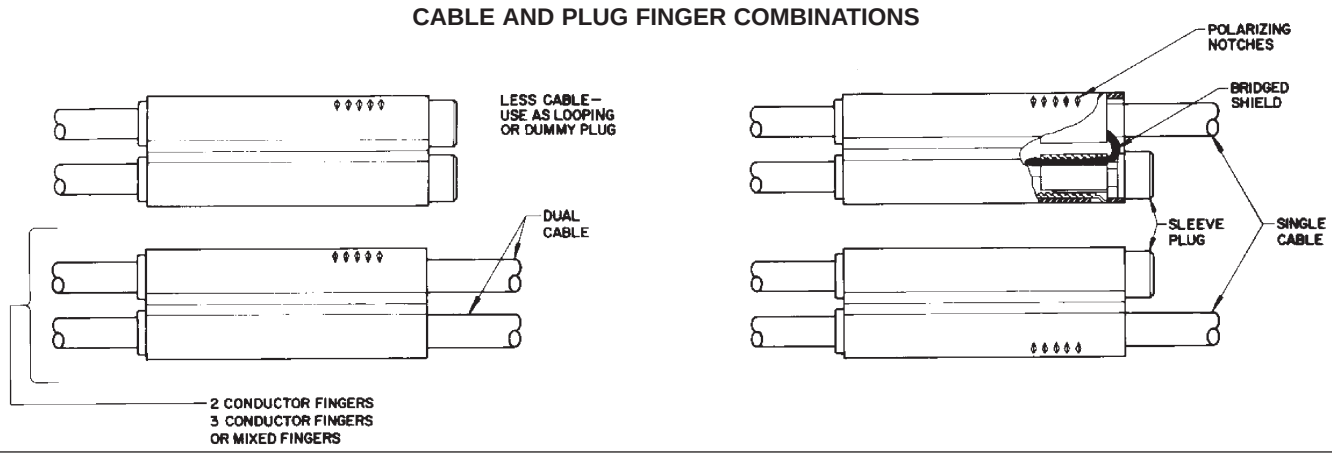


DIMENSIONS ARE FOR REFERENCE ONLY Inch (mm)


® Registered trademark of Switchcraft, Inc.
Note: Contact your Switchcraft Representative for price and delivery

* Please visit the product pages on our website for the most up-to-date product information

## MINIATURE TT® MOLDED PATCH CORDS (continued)

| Part Numbers | | Length |
|---|---|---|
| Series TT100 | Series TT120 | feet (m) |
| ◊TT101 | ◊TT121 | 0.5 (.152) |
| ◊TT102 | ◊TT122 | 1.0 (.305) |
| ◊TT103 | ◊TT123 | 1.5 (.457) |
| ◊TT104 | ◊TT124 | 2.0 (.610) |
| ◊TT105 | ◊TT125 | 2.5 (.762) |
| ◊TT106 | ◊TT126 | 3.0 (.914) |
| ◊TT107 | ◊TT127 | 4.0 (1.219) |
| ◊TT108 | ◊TT128 | 5.0 (1.524) |
| ◊TT109 | ◊TT129 | 6.0 (1.829) |
| ◊TT110 | ◊TT130 | 7.0 (2.134) |
| ◊TT111 | ◊TT131 | 8.0 (2.438) |
| ◊TT112 | ◊TT132 | 9.0 (2.743) |
| ◊TT113 | ◊TT133 | 10.0 (3.05) |
| ◊TT114 | ◊TT134 | 11.0 (3.353) |
| ◊TT115 | ◊TT135 | 12.0 (3.658) |

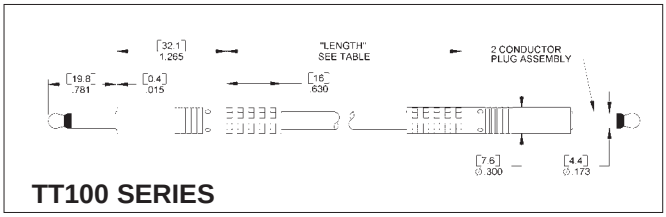


TT100 SERIES

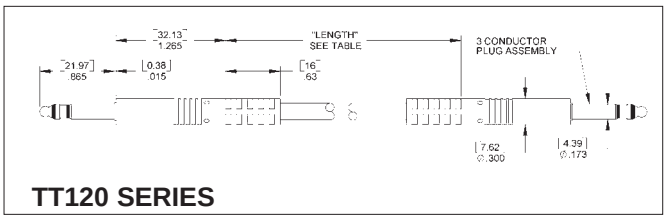


TT120 SERIES

| Part Numbers | | Length |
|---|---|---|
| Series TT140 | Series TT160 | feet (m) |
| ◊TT141 | ◊TT161 | 0.5 (.152) |
| ◊TT142 | ◊TT162 | 1.0 (.305) |
| ◊TT143 | ◊TT163 | 1.5 (.457) |
| ◊TT144 | ◊TT164 | 2.0 (.610) |
| ◊TT145 | ◊TT165 | 2.5 (.762) |
| ◊TT146 | ◊TT166 | 3.0 (.914) |
| ◊TT147 | ◊TT167 | 4.0 (1.219) |
| ◊TT148 | ◊TT168 | 5.0 (1.524) |
| ◊TT149 | ◊TT169 | 6.0 (1.829) |
| ◊TT150 | ◊TT170 | 7.0 (2.134) |
| ◊TT151 | ◊TT171 | 8.0 (2.438) |
| ◊TT152 | ◊TT172 | 9.0 (2.743) |
| ◊TT153 | ◊TT173 | 10.0 (3.05) |
| ◊TT154 | ◊TT174 | 11.0 (3.353) |
| ◊TT155 | ◊TT175 | 12.0 (3.658) |

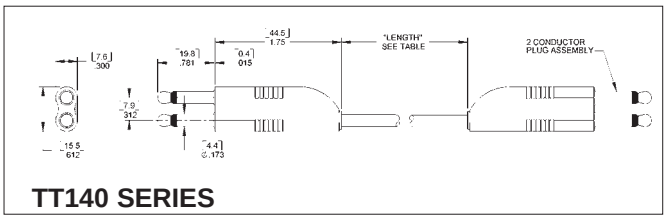


TT140 SERIES

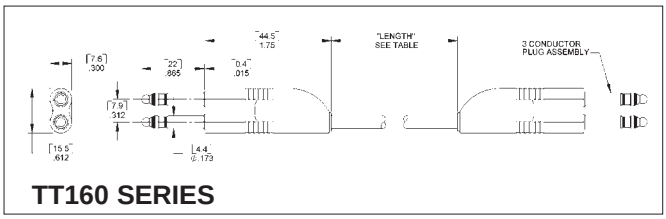


TT160 SERIES

## TELEPHONE COUPLERS AND ADAPTERS

### TELEPHONE PATCH COUPLERS

TT-couplers interconnect 2- or 3-conductor patch cords terminated with Switchcraft standard or tini-telephone® plugs, also similar telephone plugs with compatible finger shape and dimensions.

| Part Number | Handle Color | Cond. | Input ID Inch (mm) | Output ID Inch (mm) |
|---|---|---|---|---|
| ◊ TT281 | Black | 2 | .175 (4.44) | **.175 (4.44)** |
| ◊ TT282 | Red | 2 | | |
| ◊ TT283 | Black | 3 | | |
| ◊TT284 | Red | 3 | | |
| ◊ TT289 | Metal | 3 | .175 (4.44) | **.25 (6.35)** |
| 361A | Metal | 2 | .25 (6.35) | **.25 (6.35)** |
| ◊ 362A | Metal | 3 | | |

◊ Special order only; contact factory for prices and delivery.

### TT-REPLACEMENT CORDS

Series TT700 cords have bronze tinsel conductors covered with thermoplastic insulation. A braided shield surrounds the conductors, and the cord is finished with a braided black thermoplastic jacket. Cord ends are reinforced to accept the internal threaded end of a TT-Phone Plug® plug. Used as a replacement cord for Series TT720 and TT740 patch cords, and used on TT-Twin Plug® plugs, Series TT260, in dual cable assemblies with 2- and 3-conductor (or combinations) plug fingers requiring independent tip, ring and sleeve circuits, and for single cable assemblies where supplementary cross-over wiring is needed for common tip, ring and/or sleeve circuits.

◊**TT701** - Length 6" (152.4 mm).
◊**TT709** - Length 6' (1.829 m).

DIMENSIONS ARE FOR REFERENCE ONLY Inch / (mm)

* Please visit the product pages on our website for the most up-to-date product information

# VIDEO PATCH CORDS

Switchcraft new broadcast series video patch cords are available in eight base ten color codes. Our cable is a high performance serial digital 75 Ohm RG59 type. This unique low-loss cable is ideal for “True” 75 Ohm HD patching as well as conventional analog signals.
The jacket is made flexible with very low retract memory.

**Midsize Video Patch**
**VMP**

## FEATURES:

* Rugged nickel-plated handles knurled for positive finger grip.
* Flexible black "boot" placed on all cable colors for more positive grip and cable strain relief.
* Overall flexible jacket for easy coil and low retract memory.

## SPECIFICATIONS:

| | | |
|---|---|---|
| Plug Housing: | Nickel-plated, copper alloy. | |
| Plug Contact Pin: | Gold-plated, copper alloy. | |
| Cable: | Conductor: | 22 AWG (19 x 34) Stranded BC |
| | Shield: | 95% BC Braid |
| | Dielectric: | .146", 3.70mm, Cellular (Foam) PE |
| | Jacket: | Matte Finish PVC |
| | Nom. Imp: | 75 Ohm |

| VP | | | VMP | | |
|---|---|---|---|---|---|
| Video Patch | Length (Feet) | Cable Color | Video Patch | Length (Feet) | Cable Color |

| Part Numbering System<br>Video Patch Cords | Video Patch | Length (Feet) |
|---|---|---|
| **Standard .090 WECO** | **VP** | |
| **Midsize Video Patch** | **VMP** | |

| Colors | | Color Code | Stock Lengths |
|---|---|---|---|
| | | | 1' |
| Black | = | BK | 2' |
| Red | = | R | 3' |
| Orange | = | O | 4' |
| Yellow | = | Y | 5' |
| Green | = | GN | 6' |
| Blue | = | BL | 7' |
| Purple | = | P | 8' |
| Gray | = | GY | 9' |
| | | | 10' |

(Custom lengths are available by request)

**Standard .090 WECO**
**VP**

DIMENSIONS ARE FOR REFERENCE ONLY Inch (mm)



® Registered trademark of Switchcraft, Inc.
Note: Contact your Switchcraft Representative for price and delivery

* Please visit the product pages on our website for the most up-to-date product information

# 3-CONDUCTOR TT PATCH CORDS: ANALOG / AES/EBU AUDIO AND RS422 PATCHING

Switchcraft single 3-conductor TT audio patch cords have now been designed with a low capacitance cable which at 110 Ohms is ideal for digital audio AES/EBU and SMPTE Mtime code patching. The overall jacket is now flexible in eight colors. The nickel plated plugs allow for non-tarnishing and the overmolded handle-boot reduces strain off the cable when pulled.
Switchcraft dual 3-conductor TT patch cords have also been redesigned with an overall flexible cable and six colors to choose from. Like the single TT the dual plugs are nickel plated and flexible. These cords work with all Switchcraft TT stereo spaced bays for analog audio and RS422 data patching.

**Dual Bantam TT**
**TTD**

## SPECIFICATIONS

Standard plug terminations are single 3-conductor TT.
Plug handle is molded thermoplastic.

| | |
|---|---|
| Plugs: | Tip Rod, Ring and Sleeve - Copper Alloy |
| Cable: | 26 AWG (30x40) OFBC, 110 Ohm Low Capacitance. Jacket is Matte PVC |

| TT | | | TTD | | |
|---|---|---|---|---|---|
| Tiny Telephone | Length (Feet) | Cable Color | Tiny Telephone Dual | Length (Feet) | Cable Color |

| Part Numbering System Video Patch Cords | Video Patch | Length (Feet) | Cable Color |
|---|---|---|---|
| **Single Bantam TT** | **TT** | | |
| **Dual Bantam TT** | **TTD** | | |

TTD Not available in purple or gray.

**Single Bantam TT**
**TT**

| Colors | | Color Code | Stock Lengths |
|---|---|---|---|
| | | | 1' |
| Black | = | BK | 2' |
| Red | = | R | 3' |
| Orange | = | O | 4' |
| Yellow | = | Y | 5' |
| Green | = | GN | 6' |
| Blue | = | BL | 7' |
| Purple | = | P | 8' |
| Gray | = | GY | 9' |
| | | | 10' |

(Custom lengths are available by request)
1 Foot (12" inches) equals 3.28 meters

DIMENSIONS ARE FOR REFERENCE ONLY Inch (mm)

# NOTES



* Please visit the product pages on our website for the most up-to-date product information

Switchcraft®



® Registered trademark of Switchcraft, Inc.
Note: Contact your Switchcraft Representative for price and delivery

* Please visit the product pages on our website for the most up-to-date product information

# MINIATURE KEYBOARD SWITCHES

## IBS MINIATURE SWITCHES

### SERIES 98000R

Momentary IBS switches provide cost-effective versatility for a wide range of electrical/electronic applications including switching analog and digital signals in business systems, public address, test instruments, medical, EDP (computer), input devices and peripheral equipment, local area network, telecommunication, digital transmission equipment, telephone systems and attachments and calculators. Convenient modular design allows quick assembly to PC boards. These switches are also available in multiple station assemblies (see page 308).

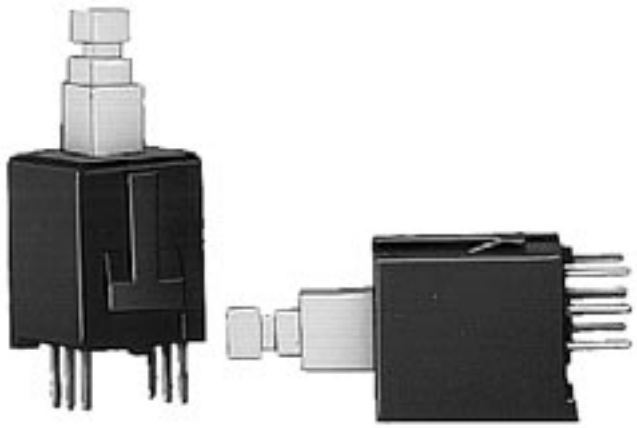

### SPECIFICATIONS

### MECHANICAL

**Switch Actuation:** Momentary
**Plunger Travel:** .144" (3.66 mm).
**Actuation Force (Full Travel):** 12-15 ounce (340-425 grams).
**Life:** 1 million operations.

### ELECTRICAL

UL approved at .25 A @ 28V DC and .125 A @ 125V AC

### MATERIALS

**Housing:** Molded thermoplastic UL 94V-0
**Plunger:** Molded thermoplastic UL 94V-0.
**Contactors:** Copper alloy.
**Terminals:** Copper alloy, solder-plated.
**Contact Surfaces:** Gold-plated.

### MOUNTING

Switches have .157" (4 mm) long PC terminals for mounting on single- or double-sided PC boards up to .094" (2.4 mm) thick on 0.394" (10 mm) minimum centers in rows or arrays. 0.394" (10 mm) PC terminals available on special order. Rugged molded-in standoff legs provide stable mounting and clearance for PC board cleaning.

### ORDERING STANDARD SWITCHES

Order switches and pushbuttons by part numbers from table.

### PART NUMBERS

| Part No.[1] | Description | Circuit | Dim. A |
|---|---|---|---|
| 982A01R | Momentary | 1-A | .157" (4 mm) |
| 982A03R | | 1-C | |
| 982A06R | | 2-C | |

1 Order pushbuttons separately.

### ORDERING SPECIAL SWITCHES

Contact your Switchcraft representative with full specifying details.

### SPECIAL ORDER FEATURES

- Other circuitry - 1B, 2A or 2B
- Longer terminals - .394" (10 mm) long.

## IBS SWITCH CATALOG NUMBERING SYSTEM

**98 X X XX D R**

**SERIES •**
98 - 98000R

**MECHANICAL FUNCTIONS •**
2 - Momentary

**TERMINALS •**
A - .157" (4 mm)
◊ B - .394" (10 mm)

◊ D - Make-Before-Break (Shorting Contacts)
(Use with 03, 06 circuits only when required.)

**• CIRCUITS**
01 - 1A
◊ 02 - 1B
03 - 1C*
◊04 - 2A
◊05 - 2B
06 - 2C

◊ Special order only; contact Switchcraft for price and delivery.
* Non-shorting (break-before-make) contacts

DIMENSIONS ARE FOR REFERENCE ONLY Inch (mm)

* Please visit the product pages on our website for the most up-to-date product information

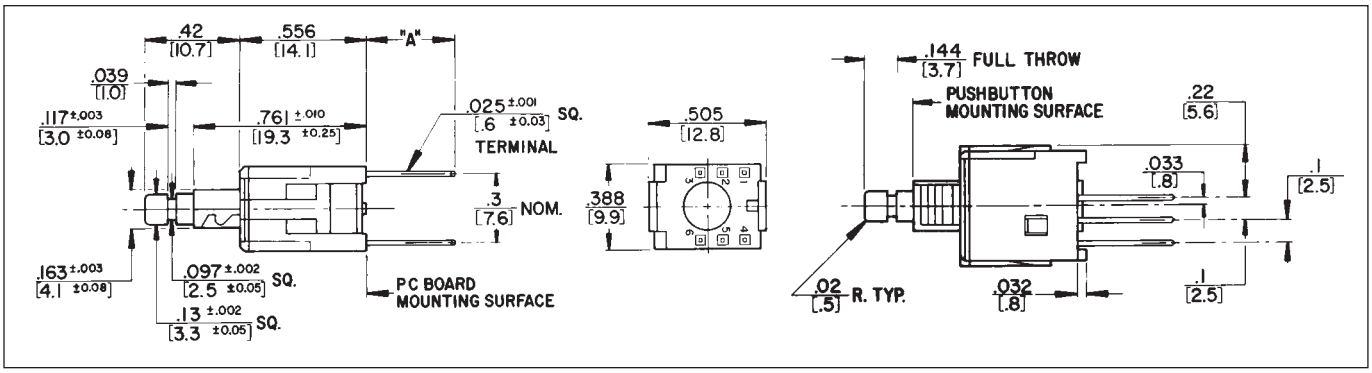


### TERMINAL FUNCTION BY TERMINAL NUMBER

| | First Pole[1] | | | Second Pole | | |
|---|---|---|---|---|---|---|
| Circuit | N.O. | N.C. | Common | N.O. | N.C. | Common |
| 1-A | 3 | - | 2 | - | - | 5* |
| 1-B | - | 1 | 2 | - | - | 5* |
| 1-C | 3 | 1 | 2 | - | - | 5* |
| 2-A | 3 | - | 2 | 6 | - | 5 |
| 2-B | - | 1 | 2 | - | 4 | 5 |
| 2-C | 3 | 1 | 2 | 6 | 4 | 5 |

*Pin 5 is used as a support pin for switch mounting and has no electrical connection. 1. N.O.= normally open; N.C.= normally close.

### RECOMMENDED PC BOARD LAYOUT (.300 x .100) (Component Side)

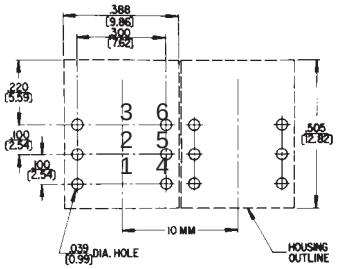


## KEYBOARD SWITCH PUSHBUTTONS

Pushbuttons designed for IBS switches are available in white, black, red, blue, and gray. Other colors are available on special order. Pushbutton faces are concave for operator convenience and can be mounted either horizontally or vertically. Pushbuttons must be ordered separately, but may be factory installed, if desired, at extra cost.

TYPE I TYPE II

### PART NUMBERS

| Type I | Type II | Color | Type I | Type II | Color |
|---|---|---|---|---|---|
| P2936 | P2951 | White | P2941 | P2956 | Blue |
| P2937 | P2952 | Black | P2942 | P2957 | Gray |
| P2938 | P2953 | Red | ◊P2943 | ◊P2958 | Brown |
| ◊P2939 | ◊P2954 | Yellow | – | ◊P2979 | Cream |
| ◊P2940 | ◊P2955 | Green | – | ◊P2992 | Tangerine |

◊ Special order only; contact Switchcraft for price and delivery.

### LEGENDS

Engraved letters and numbers are available on special order. A-Z, ON and OFF in Condensed Block typeface are available. Other custom legends may be supplied (please inquire). Refer to drawing and chart for legend data.

| Character Height inches (mm) | Horizontal Mount (Char. Max.) | |
|---|---|---|
| | I | II |
| 1/8" (3.175) | 3 | 4 |
| 3/32" (2.381) | 4 | 5 |
| 5/64" (1.984) | 4 | 5 |

HORIZONTAL MOUNT

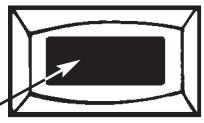


| Character Height inches [mm} | Vertical Mount (Char. Max.) | |
|---|---|---|
| | I | II |
| 1/8" (3.175) | 1 | 1 |
| 3/32" (2.381) | 2 | 2 |
| 5/64" (1.984) | 2 | 3 |

VERTICAL MOUNT

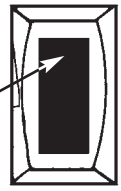


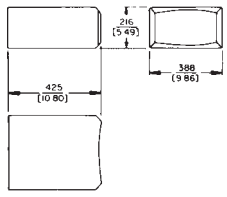


TYPE I PUSHBUTTON

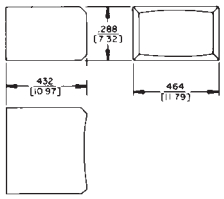


TYPE II PUSHBUTTON

DIMENSIONS ARE FOR REFERENCE ONLY Inch (mm)


® Registered trademark of Switchcraft, Inc.
Note: Contact your Switchcraft Representative for price and delivery

* Please visit the product pages on our website for the most up-to-date product information

# UNISWITCH® SWITCHES

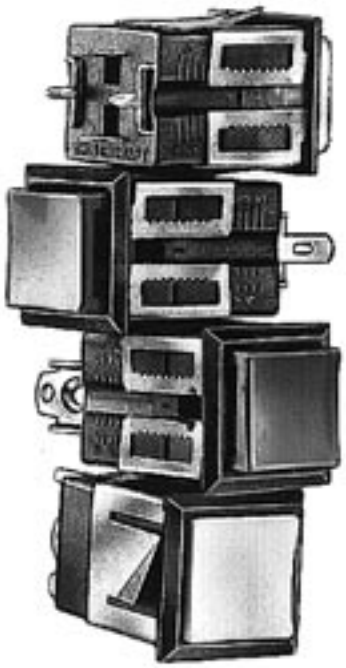

### SERIES US - Non-illuminated,
### SERIES LUS - Illuminated

Cost-effective Uniswitch switches are lighted or non-lighted momentary switches featuring snap-in mounting in a single hole and a choice of solder/screw (#5-40), solder/quick-connect (AMP FASTON® 110) 60967-1, or stand-off PC terminals. Molded housing protects internal parts, and bezel functions as built-in escutcheon. Series LUS accepts T 1-3/4 bi-pin lamps. (Lamps not included.)

®FASTON is a registered trademark of AMP INC.

## MOUNTING

"Snap-in" mounting is in .617" (15.67 mm) minimum square hole - for row or matrix mounting. Panel thickness: .047" (1.19 mm) to .266" (6.76 mm) maximum. To mount, simply press switch into panel; "Adjusto-Clip" locking tabs engage panel and hold switch securely. Behind panel distance is 1.312" (33.32 mm) minimum.

## SPECIFICATIONS

**Switch Housing:** Molded plastic, charcoal gray only.
**"Adjusto-Clip":** Copper alloy.
**Contactor:** Copper alloy plated. Form 1-A rated: 250 mA, 30 W maximum, AC, non-inductive load.
**Terminals:** Copper alloy, silver-plated.
**Pushbuttons:** Molded plastic in 8 colors.
**Operating Force:** 12 - 16 ounce (340-454 grams).

## SPECIAL ORDER FEATURES

- Other contactor platings.
- Engraved legends (See page 270).
- Other pushbutton colors.
- "Adjusto-Clips" set to positions 2, 3, 4, or 5.

## "ADJUSTO-CLIP" MOUNTING

| Position Number | Panel Thickness Inch (mm) | | Position Number | Panel Thickness Inch (mm) | |
|---|---|---|---|---|---|
| | Min. | Max. | | Min. | Max. |
| 1* | .047 (1.2) | .078 (2.0) | 4 | .188 (4.8) | .219 (5.6) |
| 2 | .094 (2.4) | .125 (3.2) | 5 | .234 (6.0) | .266 (6.8) |
| 3 | .141 (3.6) | .172 (4.4) | | | |

* "Adjusto-Clips" normally installed in this position unless otherwise specified.

## PART NUMBERS (Order switches and pushbuttons separately)

| Terminal Type/Part Number; Series US | | | Terminal Type/Part Number; Series LUS[1] | | |
|---|---|---|---|---|---|
| Solder/ Screw | Printed Circuit | Solder/ Quick-Connect | Solder/ Screw | Printed Circuit | Solder/ Quick-Connect |
| US001 | US001PC | US001ST | LUS001 | LUS001PC | LUS001ST |

1. Lamp not included.
◊ Special order only; contact Switchcraft for price and delivery.

## PUSHBUTTONS* (Pushbuttons ordered separately from switches.)

| Part Number | Color | Part Number | Color |
|---|---|---|---|
| P23491 | Red | P23495 | White |
| P23492 | Black | P23497 | Orange |
| P23493 | Green | P23498 | Yellow |
| P23494 | Blue | ◊P234913 | Amber |

* Extra replacement pushbuttons can be ordered separately.

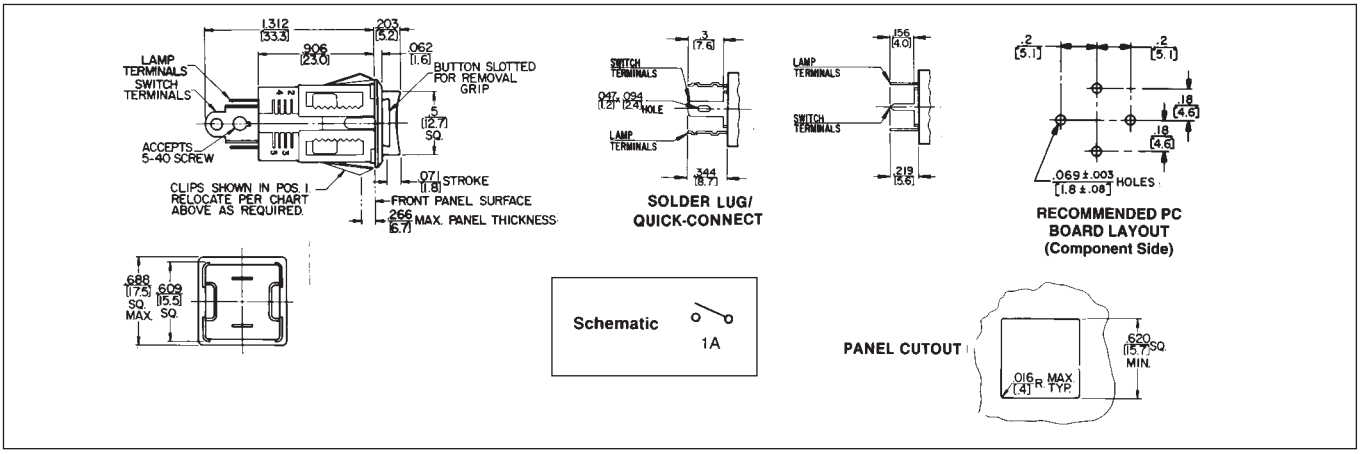


DIMENSIONS ARE FOR REFERENCE ONLY Inch (mm)

* Please visit the product pages on our website for the most up-to-date product information

# BOX SWITCH® SWITCHES

BXR013PC

SHOWN ACTUAL SIZE

Rear view, BXR056 Solder Lug/Quick-Connect Terminals.

Rear view, BXR013PC PC Terminals.

## SERIES BXR

Economical momentary, non-illuminated switches feature "Adjusto-Clip" snap-lock mounting and selection of switching. Bezel trims mounting and enclosed construction protects against dust, dirt, and physical damage. Color pushbuttons have concave face for positive "feel".

## MOUNTING

Front mount in .620" (15.75 mm) minimum square hole. Solder lug/quick-connect terminals accept AMP FASTON® 110 terminals; PC terminals fit boards up to .281" (7.14 mm) thick. "Adjusto-Clip" permits mounting in panels from .047 " (1.19 mm) to .281" (7.14 mm) thick.

®FASTON is a registered trademark of AMP INC.

## SPECIFICATIONS

**Housing:** Molded plastic, charcoal gray only.
**Pushbutton:** Molded plastic; red, black, green, and white standard.
**"Adjusto-Clip" Mounting Frame:** Copper alloy, plated.
**Contact Springs:** Copper alloy, plated.
**Contacts:** Integral, copper alloy, plated.
1-A, 1-C, 2-C, or 2-A + 2-C
**Switching:** 250 mA, 30 W max., AC, non-inductive load.
**Terminals:** Copper alloy, silver-plated.

## SPECIAL ORDER FEATURES

- Other contact platings.
- Engraved legends (see page 270).
- Other pushbutton colors.
- "Adjusto-Clips" set to positions 2, 3, 4, or 5.

## PART NUMBERS

| Pushbutton Color/Part Number | | | | Circuits |
|---|---|---|---|---|
| Red | Black | Green | White | |
| **Solder Lug/Quick-Connect Terminals** | | | | |
| BXR011 | BXR021 | ◊BXR031 | BXR051 | 1-A |
| BXR013 | BXR023 | BXR033 | BXR053 | 1-C |
| BXR016 | BXR026 | BXR036 | BXR056 | 2-C |
| BXR0110 | ◊BXR0210 | ◊BXR0310 | ◊BXR0510 | 2-A + 2-C |
| **PC Terminals** | | | | |
| ◊BXR011PC | ◊BXR021PC | ◊BXR031PC | ◊BXR051PC | 1-A |
| ◊BXR013P | ◊BXR023P | ◊BXR033PC | ◊BXR053PC | 1-C |
| BXR016PC | BXR026PC | ◊BXR036PC | ◊BXR056PC | 2-C |
| ◊BXR0110PC | ◊BXR0210PC | ◊BXR0310PC | BXR0510PC | 2-A + 2-C |

◊ Special order only; contact factory for price and delivery.

## "ADJUSTO-CLIP" MOUNTING POSITIONS

| Position Number | Panel Thickness Inch (mm) | |
|---|---|---|
| | Minimum | Maximum |
| 1* | .047 (1.2) | .094 (2.4) |
| 2 | .094 (2.4) | .141 (3.6) |
| 3 | .141 (3.6) | .188 (4.8) |
| 4 | .188 (4.8) | .234 (6.0) |
| 5 | .234 (6.0) | .281 (7.1) |

* "Adjusto-Clips" normally installed in this position unless otherwise specified.

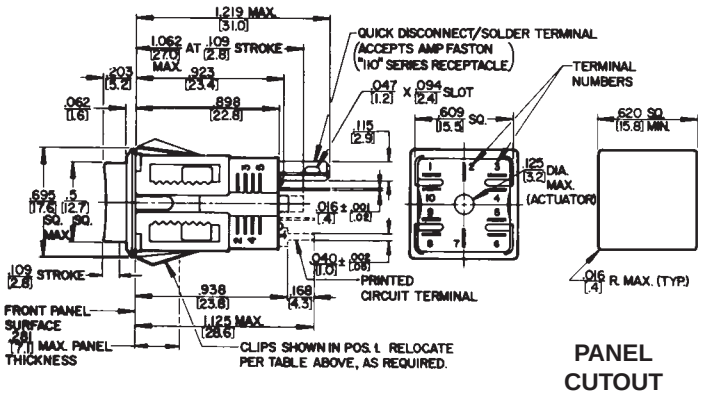


PANEL CUTOUT

SCHEMATIC

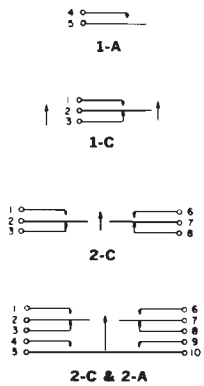


RECOMMENDED PC BOARD LAYOUT

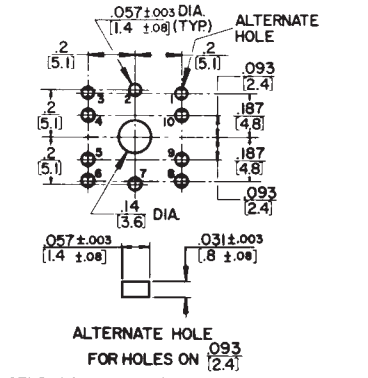


DIMENSIONS ARE FOR REFERENCE ONLY Inch (mm)


® Registered trademark of Switchcraft, Inc.
Note: Contact your Switchcraft Representative for price and delivery

* Please visit the product pages on our website for the most up-to-date product information

## BUTTON-SWITCH® SWITCHES

903

923

### SERIES 903, 913, 923, 933

These small momentary switches are completely enclosed in rugged metal housing. Front or rear-panel mount types offer 1-A, 1-B, 1-C, or 1-D switching. Red or black pushbuttons and solder terminals are standard. Series 903 and 913 are front mount in .469" (11.91 mm) diameter hole in panels up to .297" (7.54 mm) thick. Series 923 and 933 are rear mount in .250" (6.35 mm) diameter hole in panels up to .156" (3.96 mm) thick. Mounting hardware is supplied.

### SPECIFICATIONS

**Body:** Copper alloy, plated.
**Pushbutton:** Molded red or black plastic, integral with shaft.
**Insulation:** Rigid plastic.
**Springs:** Integral contacts, plated.
**Ratings:** 250 mA, 30 W maximum, AC, non-inductive load.
**Solder Terminals:** Copper alloy, silver-plated.
**Locknuts:** Copper alloy, plated.
Series 903, 913: P-1053-1.
Series 923, 933: P-1150-1.
**Lockwasher:** Series 903, 913: Steel, P-1060-3
**Flat Washer:** Series 923, 933: Steel, plated, S-1790-1

### SPECIAL ORDER FEATURES

• Other pushbutton colors. • Legends.

### PART NUMBERS

| Panel Mounting | Pushbutton Color/Part Number | | Circuit | Schematic[1] |
|---|---|---|---|---|
| | Red | Black | | |
| Front | 903 | 913 | 1-C | 1-C |
| | ◊903D | ◊913D | 1-D | |
| Rear | 923 | 933 | 1-C | 1-D |
| | ◊923D | ◊933D | 1-D | |

1. Circuits C or 1-D can be wired for either 1-A or 1-B switching
◊ Special order only; contact Switchcraft for price and delivery.

## TINI-SWITCH® SWITCHES

### SERIES 950, 960

Momentary Tini-Switch® switches are miniaturized versions of Littel-Switch® switches (see page 274 for construction details). .25 A contacts are intended for low-power switching where contact resistance is not critical. Red or black pushbuttons, solder lug terminals and choice of 1-A, 1-B and 1-C switching is standard.

### MOUNTING

Switches mount from rear in .250" (6.35 mm) diameter hole in panels up to .094" (2.39 mm) thick. Mounting washers and locknuts are supplied.

### SPECIFICATIONS

**Bushing:** Copper alloy, plated.
**Pushbutton:** Molded plastic, integral with shaft.
**Insulation:** Rigid plastic.
**Springs:** Copper alloy.
**Contacts:** Integral contacts are standard. .25 A, 30 W maximum, AC, non-inductive load.
**Washer:** Steel, plated, S17901.
**Locknut:** Copper alloy, plated, P11501.

### SPECIAL ORDER FEATURES

• Other pushbutton colors. • Legends.

### PART NUMBERS

| Pushbutton Color/Part Number | | Circuit | Schematic |
|---|---|---|---|
| Red | Black | | |
| 951 | 961 | 1-A, SPST, (N.O.) | 1-A |
| ◊952 | ◊962 | 1-B, SPST, (N.C.) | 1-B |
| 953 | 963 | 1-C, SPDT | 1-C |

◊ Special order only; contact Switchcraft for price and delivery.

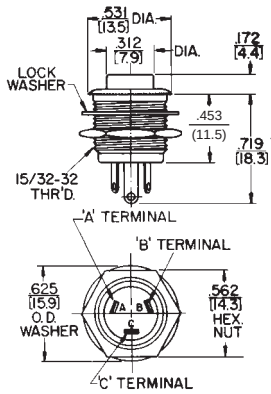


Series 903 & 913

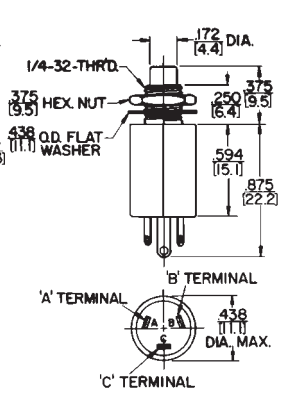


Series 923 & 933

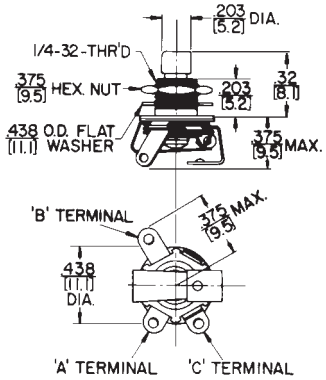


Series 950 & 960

DIMENSIONS ARE FOR REFERENCE ONLY Inch (mm)

* Please visit the product pages on our website for the most up-to-date product information

# LITTEL-SWITCH® SWITCHES

101 102 103

## PART NUMBERS

| Pushbutton Color/Part Number | | Circuit | Schematic |
|---|---|---|---|
| Red | Black | | |
| 101 | 201 | 1-A, SPST, (N.O.) | |
| ◊101S | ◊201S | | |
| ◊102 | 202 | 1-B, SPST, (N.C.) | |
| ◊102S | ◊202S | | |
| 103 | 203 | 1-C, SPDT | |
| ◊103S | ◊203S | | |

◊ Special order only; contact Switchcraft for price and delivery.
"S" at the end of part number indicates 3H rated fine silver contacts.

### SERIES 100, 100S, 200, 200S

Momentary switches feature leaf springs, insulating spacers, notched insulating washers and plated copper alloy bushing assembled into a rugged, reliable, long-life switch for limited space applications. Series 100 and 200 have integral .25 A contacts intended for low power switching where contact resistance is not critical. Series 100S and 200S have 3 A fine silver contact. Red and black pushbuttons, solder lug terminals and choice of 1-A, 1-B or 1-C switching are standard. Shaft and pushbutton molded as one piece. Captive shaft extends through bushing, actuated leaf springs. Notched phenolic washers insulate springs and interlock all members, eliminating possibility of springs shifting. All springs are insulated from bushing.

### MOUNTING

Switches mount from rear in panels up to .250" (6.35 mm) thick in .375" (9.52 mm) diameter holes. Locknuts and washers are supplied.

### LEGENDS

Switchcraft offers a wide variety of engraved legends on special order. Contact Switchcraft for details.

## SPECIFICATIONS

**Bushing:** Copper alloy, plated.
**Pushbutton:** Molded plastic, integral with shaft.
**Insulation:** Rigid plastic.
**Springs:** Copper alloy.
**Contacts:** Integral contacts are standard. (Series 100, 200) .250 A, 30 W maximum, AC, non-inductive load. Riveted silver contacts (Series 100S, 200S); 3A, 300 W maximum AC, non-inductive load.
**Washer:** Steel, plated, S10221.
**Locknut:** Copper alloy, plated, P10001.

## SPECIAL ORDER FEATURES

- Other pushbutton colors.
- Legends.
- Welded crossbar palladium contacts for dry circuit.

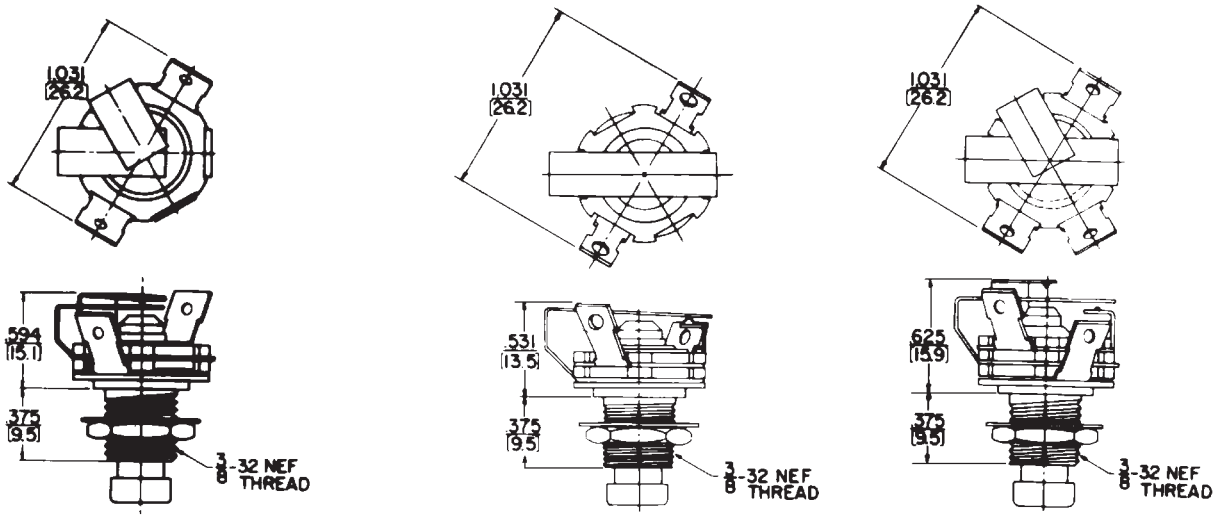


SPST (NO) 1-A SPST (NC) 1-B SPDT 1-C

DIMENSIONS ARE FOR REFERENCE ONLY Inch (mm)


® Registered trademark of Switchcraft, Inc.
Note: Contact your Switchcraft Representative for price and delivery

* Please visit the product pages on our website for the most up-to-date product information

# HI-D SWITCH® PC MOUNT SWITCHES

## SERIES H-100, H-100PC, H-200, H-200PC

Compact, momentary switches mount on .625" (15.87 mm) centers in rows or matrix arrays and are the same height and panel size as Switchcraft's Hi-D Jack. Rugged "box" body protects contact springs against mechanical damage and keys them in precise alignment. Precision springs produce high contact pressure, smoother wear-reducing actuation, and positive "make-break". Recommended where contact resistance is not critical.

## MOUNTING

Rear of panel mount in .375" (15.87 mm) diameter hole in panels up to .156" (3.96 mm) thick. Behind panel space: 1.094" (27.79 mm) minimum. Mounting hardware supplied. Switches with PC terminals mount directly to PC boards, and may also be panel mounted with threaded bushing.

## SPECIFICATIONS

**Switch Housing:** Molded plastic.
**Mounting Bushing:** Copper alloy, plated.
**Pushbutton/Actuator:** Thermoplastic, red or black with concave face.
**Contact Springs:** Copper alloy, silver or gold-plated.
**Contacts:** Integral, 1-A, 1-B, 1-C, or 1-D, 0. 25 A, 30 W maximum, non-inductive load.
**Contactor:** Copper alloy, plated.
**Locknut:** Copper alloy, plated. P10001 (supplied).
**Washer:** Steel, nickel-plated. S10221 (supplied).

## SPECIAL ORDER FEATURES

- Other pushbutton colors.
- Legends (see page 270).

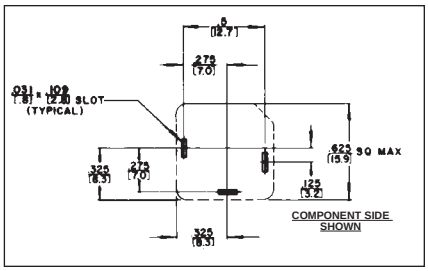


SERIES H100, H200

## PART NUMBERS

| Solder Lug Terminals | | PC Terminals | | Circuit | Schematic |
|---|---|---|---|---|---|
| Pushbutton Color/Part Number | | Pushbutton Color/Part Number | | | |
| Red | Black | Red | Black | | |
| H101 | H201 | ◊H101PC | ◊H201PC | 1-A | See Below |
| ◊H102 | ◊H202 | ◊H102PC | ◊H202PC | 1-B | |
| H103 | H203 | H103PC | H203PC | 1-C | |
| ◊H103D | ◊H203D | - | - | 1-D | |

◊ Special order only; contact factory for price and delivery.

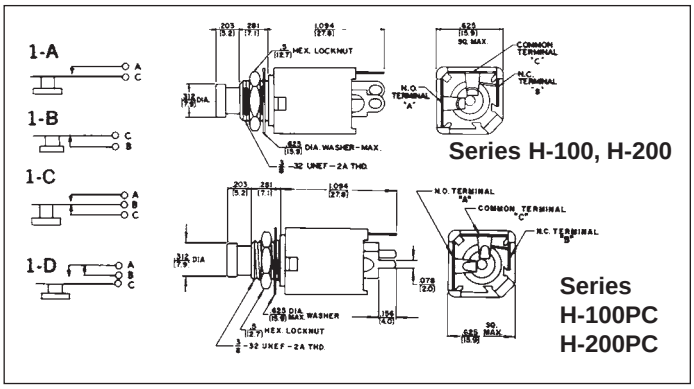


## PART NUMBERS

| Series DA | Button Color | Circuit | Schematic |
|---|---|---|---|
| ◊DA013 | Red | A-B | A-B contacts may be externally wired to provide a 1-C circuit as illustrated below. |
| ◊DA023 | Black | A-B | |
| ◊DA033 | Green | A-B | |
| ◊DA043 | Blue | A-B | |
| ◊DA053 | White | A-B | |
| ◊DA083 | Yellow | A-B | |

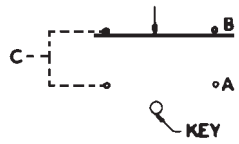


◊ Special order only; contact Switchcraft for price and delivery.

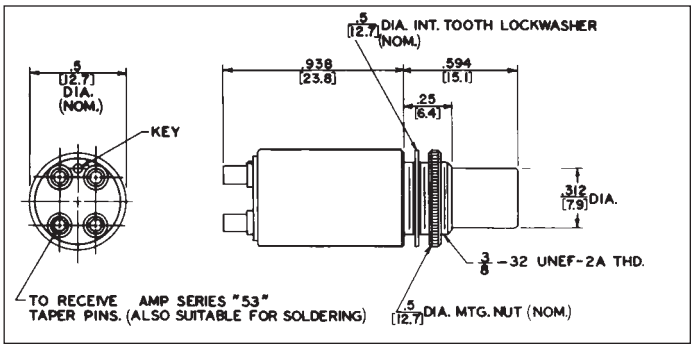


# DA-SWITCH SWITCHES

## SERIES DA

Enclosed momentary pushbutton switch. Designed to meet switching requirements of computers, data processors, ground support systems, machine and process controls, test equipment and intercoms. Anodized aluminum body protects switch contacts from dirt, dust and bending during mounting. Terminals accept AMP Series 53 taper pins. Mount in .375" (9.5 mm) hole on .531" (13.5mm) centers. Behind panel depth .938" (23.8mm) minimum.

## SPECIFICATIONS

**Housing:** Aluminum, black anodized.
**Button:** Thermoplastic, black.
**Terminal Base:** Thermoset black phenolic.
**Terminals:** Copper alloy, gold-plated.
**Contacts:** Integral. 500 mA, 5 W maximum, non-inductive load.
**Contactor:** Copper alloy, plated.
**Hardware:** Supplied with one, ◊P1970 aluminum, black anodized knurled mounting nut, and one, P1971 parkerized lockwasher.

DIMENSIONS ARE FOR REFERENCE ONLY Inch (mm)

* Please visit the product pages on our website for the most up-to-date product information

## CORD-SWITCH® CORD SWITCHES

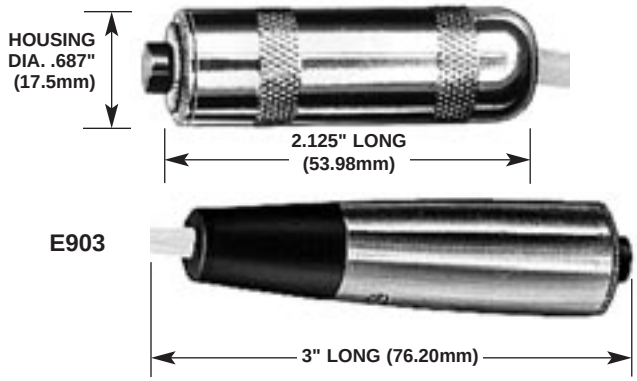


### SERIES E900, ED900, EP900

Momentary cord (pendant) switches can be specified with red or black pushbuttons, 1-C or 1-D switching, solder terminals and metal handle (Series E900), plastic handle (Series EP900), or metal handle with clamp and strain relief (Series ED900).

### SPECIFICATIONS

(See page 273 for switch specs.)

### SERIES E900, EP900:

**Housing:** Series E900 - Copper alloy, plated.
Series EP900 - Molded black plastic.
**Switch Bushing:** Copper alloy, plated.
**Insulation:** Rigid plastic.

### SERIES ED900:

**Housing:** Die-cast zinc, plated.
**Switch Body and Insert Bushing:** Copper alloy, plated.
**Insulation:** Rigid plastic.
**Cable Relief Bushing:** Black thermoplastic rubber.
**Pressure Plates:** Stainless steel.
**Cable Relief Screws:** Steel, plated.

### SPECIAL ORDER FEATURES

• Other pushbutton colors. • Custom legends

### PART NUMBERS (examples)

| Pushbutton Color/Part Number | | Maximum Cable Outside Diameter | Circuit |
|---|---|---|---|
| Red | Black | | |
| E903 | E913 | .375" [9.5 mm] | 1-C |
| ED903 | ED913 | .375" [9.5 mm] | 1-C |
| EP903 | EP913 | .250" [6.4 mm] | 1-C |
| ◊E903D | ◊E913D | .375" [9.5 mm] | 1-D |
| ◊ED903D | ◊ED913D | .375" [9.5 mm] | 1-D |
| ◊EP903D | ◊EP913D | .250" [6.4 mm] | 1-D |

◊ Special order only; contact Switchcraft for price and delivery.

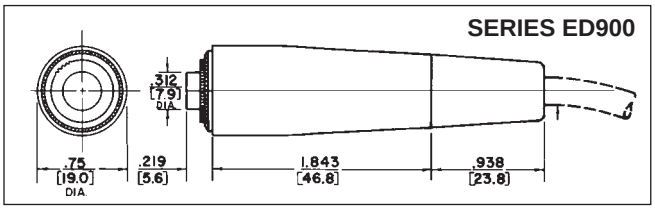


## CORDETTE® CORD SWITCHES

### SERIES 921

Momentary, 0.5 A switching combined with 1-piece molded plastic body qualifies Cordette for all types of commercial and industrial usage. The 921 has a phono jack receptacle and a phono jack in handle to fit standard phono plugs. The 921K is molded with 6' (1.8 meter), 2-conductor cable (internal cable clamp).

### SPECIFICATIONS

**Body:** 921 and 921K - Molded gray plastic with contrasting trim and gray pushbutton.
**Switch Contacts:** Integral copper alloy, plated, form 1-A, 0.5 A, 50 W maximum, AC, non-inductive load. Not recommended for high voltage circuits.
**Insulation:** Thermoplastic UL 94V-0.
**Phono Jack Terminations:** (921): Standard phono jack, similar to 3501FP (see Jacks and Plugs Section).

### SPECIAL ORDER FEATURES

- 1-B, 1-C, or 1-A + 1-B switching.
- Red, green, blue, white or yellow pushbuttons.
- Legends (see page 270).
- Other body colors.
- ST-900 - Custom-molded to any of a large selection of cables (See Molded Cable Assembly Section). Also many cable terminations, i.e., phone plugs, extension jacks, phono plugs, spade lugs, alligator clips, stripped and tinned leads, etc.

### PART NUMBERS

| Part Number | Description |
|---|---|
| 921 | Cordette switch, phono jack termination. |
| 921K | Same as 921, except with 6' (1.8 meter), 2-conductor cable with stripped and tinned leads. |

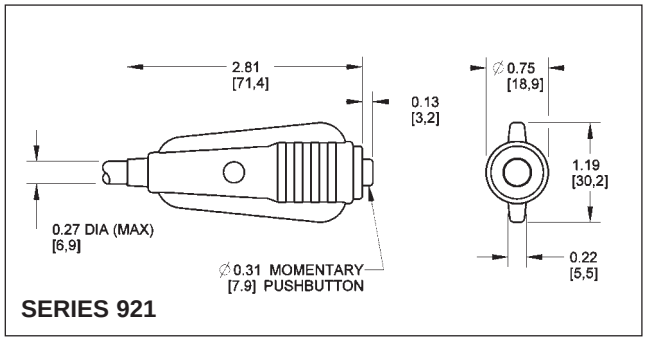


DIMENSIONS ARE FOR REFERENCE ONLY Inch (mm)


® Registered trademark of Switchcraft, Inc.
Note: Contact your Switchcraft Representative for price and delivery

* Please visit the product pages on our website for the most up-to-date product information

# PUSH-LITE® SWITCHES AND INDICATORS

Completely enclosed, lighted pushbutton switches feature long-life, highly-reliable, leaf-springs. Available with or without barriers, full or split-face display. Mounts with clamp-type bracket; no screws, washers or nuts needed. Can be mounted in vertical or horizontal rows and in matrixes. Accepts standard T 1-3/4 flange-base lamp (lamp not furnished with switch) in either 6 V to 28 V rating. Specify 1 lamp for single lamp type or 2 lamps for twin-lamp type when redundant or split-face lighting is required. Barriers and colored filter snap-inserts optional (order separately). Mounting hole (w/o barriers): 1" (25.4 mm) x .875" (22.23 mm); (w/barriers) 1.188" (30.16 mm) x .875" (22.23 mm). Panel thickness: .125" (3.18 mm) maximum. Behind panel depth 1.75" (44.45 mm) (minus panel thickness).

## MOMENTARY

| Part Number | Housing/ Pushbutton Color | Switching | AC Ratings (max.) non-inductive | Contacts | Circuits | Terminals |
|---|---|---|---|---|---|---|
| **SINGLE LAMP** | | | | | | |
| **PL103205** | Black/White | SPDT | 2 A, 125 V | Palladium | 1-C | Solder Lug |
| **PL106205** | | DPDT | | | 2-C | |
| **PL112205** | | 4PDT | | | 4-C | |
| **◊PL126205** | | DPDT | 8 A, 125V | Silver | 2-C | |
| **◊PL403205** | Gray/White | SPDT | 2 A, 125V | Palladium | 1-C | |
| **◊PL406205** | | DPDT | | | 2-C | |
| **◊PL412205** | | 4PDT | | | 4-C | |
| **◊PL706205** | Black/White | DPDT | 2 A, 125 V | | 2-C | PC |
| **◊PL712205** | | 4PDT | | | 4-C | |
| **TWIN LAMP** | | | | | | |
| **PL203205** | Black/White | SPDT | 2 A, 125 V | Palladium | 1-C | Solder Lug |
| **PL206205** | | DPDT | | | 2-C | |
| **PL212205** | | 4PDT | | | 4-C | |
| **◊PL226205** | | DPDT | 8 A, 125V | Silver | 2-C | |
| **◊PL503205** | Gray/White | SPDT | 2 A, 125V | Palladium | 1-C | |
| **◊PL506205** | | DPDT | | | 2-C | |
| **◊PL512205** | | 4PDT | | | 4-C | |
| **◊PL803205** | Black/White | SPDT | 2 A, 125 V | | 1-C | PC |
| **◊PL806205** | | DPDT | | | 2-C | |
| **◊PL812205** | | 4PDT | | | 4-C | |

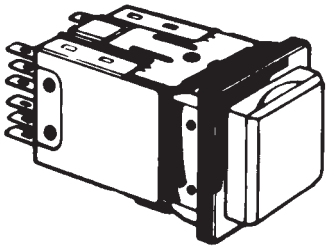

WITHOUT BARRIERS

## PUSH-LOCK/PUSH-RELEASE

| Part Number | Housing/ Pushbutton Color | Switching | AC Ratings (max.) non-inductive | Contacts | Circuits | Terminals |
|---|---|---|---|---|---|---|
| **SINGLE LAMP** | | | | | | |
| **PL103705** | Black/White | SPDT | 2 A, 125 V | Palladium | 1-C | Solder Lug |
| **PL106705** | | DPDT | | | 2-C | |
| **PL112705** | | 4PDT | | | 4-C | |
| **◊PL123705** | | SPDT | 8 A, 125V | Silver | 1-C | |
| **◊PL126705** | | DPDT | | | 2-C | |
| **◊PL403705** | Gray/White | SPDT | 2 A, 125V | Palladium | 1-C | |
| **◊PL406705** | | DPDT | | | 2-C | |
| **◊PL412705** | | 4PDT | | | 4-C | |
| **◊PL703705** | Black/White | SPDT | 2 A, 125 V | | 1-C | PC |
| **◊PL706705** | | DPDT | | | 2-C | |
| **◊PL712705** | | 4PDT | | | 4-C | |
| **TWIN LAMP** | | | | | | |
| **◊PL203705** | Black/White | SPDT | 2 A, 125 V | Palladium | 1-C | Solder Lug |
| **PL206705** | | DPDT | | | 2-C | |
| **PL212705** | | 4PDT | | | 4-C | |
| **◊PL226705** | | DPDT | 8 A, 125V | Silver | 2-C | |
| **◊PL506705** | Gray/White | DPDT | 2 A, 125V | Palladium | 2-C | |
| **◊PL512705** | | 4PDT | | | 4-C | |
| **◊PL803705** | Black/White | SPDT | 2 A, 125 V | | 1-C | PC |
| **◊PL806705** | | DPDT | | | 2-C | |
| **◊PL812705** | | 4PDT | | | 4-C | |

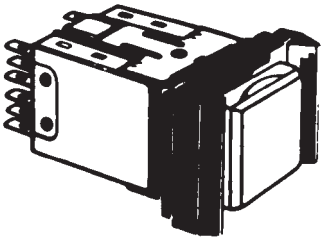

WITH BARRIERS

◊ Special order only; contact Switchcraft for price and delivery.

DIMENSIONS ARE FOR REFERENCE ONLY Inch (mm)

* Please visit the product pages on our website for the most up-to-date product information

# PUSH-LITE® SWITCHES AND INDICATORS (continued)

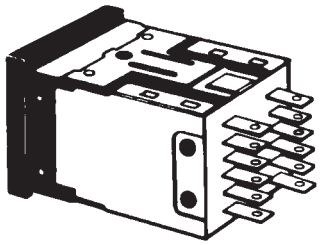

## U.L. LISTED, MOMENTARY & PUSH-LOCK/PUSH-RELEASE

| Part Number | Housing/ Pushbutton | Action[1] | Switching | AC Ratings (max.) non-inductive | Contacts | Circuit | Listing | Terminals |
|---|---|---|---|---|---|---|---|---|
| **SINGLE LAMP** | | | | | | | | |
| ◊26U1003 | Black/White | M | SPDT | 8 A, 125 V | Silver | 1-C | UL | Solder Lug |
| ◊26U1004 | | M | DPDT | 8 A, 125V | | 2-C | UL | |
| ◊26U1007 | | PL/PR | SPDT | 8 A, 125V | | 1-C | UL | |
| ◊26U1008 | | PL/PR | DPDT | 8 A, 125 V | | 2-C | UL | |
| **TWIN LAMP** | | | | | | | | |
| ◊26U1005 | Black/White | M | SPDT | 8 A, 125 V | Silver | 1-C | UL | Solder Lug |
| ◊26U1006 | | M | DPDT | 8 A, 125V | | 2-C | UL | |
| ◊26U1009 | | PL/PR | SPDT | 8 A, 125V | | 1-C | UL | |
| ◊26U1010 | | PL/PR | DPDT | 8 A, 125 V | | 2-C | UL | |

◊ Special order only; contact Switchcraft for price and delivery. **NOTE: 1** M = Momentary; PL/PR = Push-Lock/Push-Release

## SERIES PL9000 - PL® INDICATORS

Create unlimited combinations of rows and/or matrix arrays with or without Push-Lite switches. A perfect match for front panel appearance Push-Lite switches - but functions only as a lighted indicator. Mounts same as Push-Lite switches: behind panel depth 1.341" (35.55mm) maximum uses same lamp, color filter, snap inserts, light divider and optional mounting barriers as Push-Lite® switches.

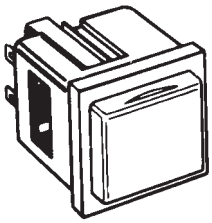

| Part Number | Description |
|---|---|
| **PL9105** | Black housing; uses 1 or 2 lamps. White screen. |
| **◊PL9205** | Same as PL-9105 except gray housing. |

## PUSHBUTTON/INDICATOR SCREENS

Series PL500 Pushbuttons/Indicator Screens are available separately for use with Push-Lite switches or PL Indicators for in-the-field substitution and/or replacement.

| Part Number | Color | Part Number | Color |
|---|---|---|---|
| **PL501** | Red | **PL508** | Yellow |
| **PL503** | Green | **PL512** | Clear |
| **PL504** | Blue | **PL513** | Amber |
| **PL505** | White | | |

## COLOR FILTER SNAP-INSERTS

Translucent plastic filters for special color coding in Push-Lite switch and PL Indicators. Use with white or clear pushbuttons.

| SERIES PL300 - Full Display Color Filters | |
|---|---|
| **Part Number** | **Color** |
| **PL303** | Green |
| **PL305** | White |
| **PL308** | Yellow |

## OPTIONAL MOUNTING BARRIERS

Molded plastic barriers separate Push-Lite switches, PL Indicators, or combinations of Push-Lite switches and PL Indicators and prevent accidental operation of adjacent switches. Series PL100: end barrier. Series PL200: center barrier. Two required between adjacently mounted switches. Push-Lite switch is shown with two PL102 end barriers installed.

| Part Number | Description |
|---|---|
| **PL102** | End barrier, black |
| **◊PL111** | End barrier, gray |
| **PL202** | Center barrier, black |
| **◊PL211** | Center barrier, gray |

◊ Special order only; contact Switchcraft for price and delivery.

## LIGHT DIVIDER

Light divider for Push-Lite switch pushbuttons and PL Indicator screens; separates lighting from twin lamps. Order light divider for each switch or indicator specified where split-face lighting is desired. **Order PL551.**

**BASIC SCHEMATIC**

Switch circuitry can be described as combinations of basic schematic circuits as shown below. N.O. means normally open; N.C. means normally closed.

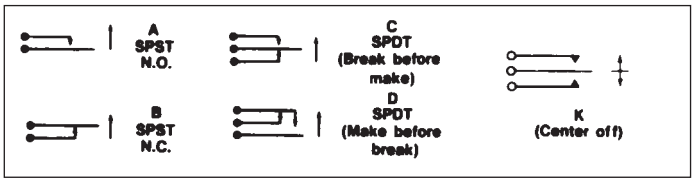


The above are strictly electrical schematics and do not necessarily indicate relative solder lug positions.

DIMENSIONS ARE FOR REFERENCE ONLY Inch (mm)



® Registered trademark of Switchcraft, Inc.

Note: Contact your Switchcraft Representative for price and delivery

* Please visit the product pages on our website for the most up-to-date product information

# PUSH-LITE® SWITCHES - PART NUMBERING SYSTEM

| P L | | | | |
|---|---|---|---|---|
| **SERIES**<br>PL | **LAMP & SWITCH HOUSING COLOR**<br>1 - Single lamp, Black housing<br>2 - Twin lamp, Black housing<br>3 - Non-illuminated, Black housing<br>4 - Single lamp, Gray housing<br>5 - Twin lamp, Gray housing<br>6 - Non-illuminated, Gray housing<br>7 - Single lamp, Black housing (PC terminals)<br>8 - Twin lamp, Black housing (PC terminals) | **CIRCUITRY**<br>03 - 1C<br>06 - 2C<br>09 - 3C<br>12 - 4C<br>23 - 1C (8A)<br>26 - 2C (8A)<br>29 - 3C (8A)<br>32 - 4C (8A) | **ACTION**<br>2 - Momentary<br>7 - Push-Lock/ Push-Release<br>9 - Momentary Silent* | **PUSHBUTTON COLOR**<br>01 - Red<br>03 - Green<br>04 - Blue<br>05 - White<br>08 - Yellow<br>12 - Clear<br>13 - Amber |

* Special order only. Contact Switchcraft.

**OPTIONS**

Pushbutton/indicator screens, color filter snap-inserts, mounting barriers and lighted dividers can be specified separately for substitution/replacement; order from tables. Also, engraving of legends is available; contact Switchcraft.

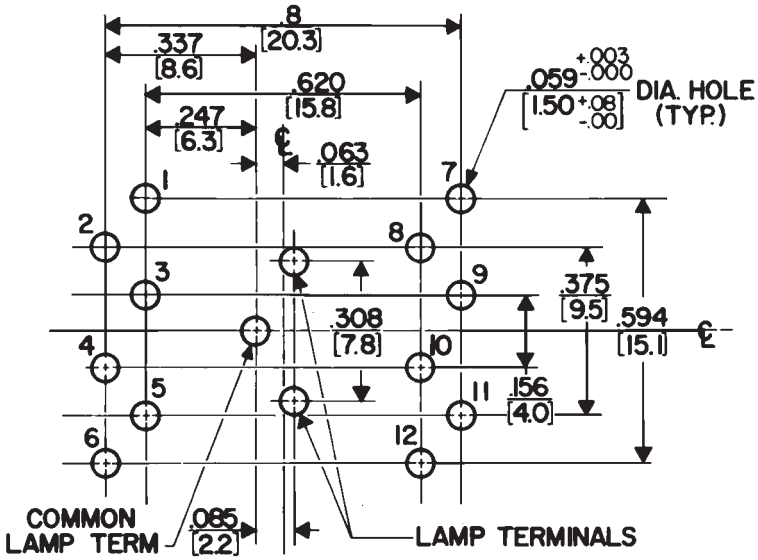


RECOMMENDED PC BOARD LAYOUT
(Component Side)

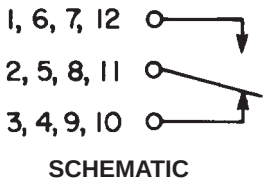


SCHEMATIC

DIMENSIONS ARE FOR REFERENCE ONLY Inch (mm)

* Please visit the product pages on our website for the most up-to-date product information

# PUSH-LITE® SWITCHES AND INDICATORS (continued)

## OUTLINE DIMENSIONS

### PUSH-LITE SWITCHES WITH SOLDER LUGS

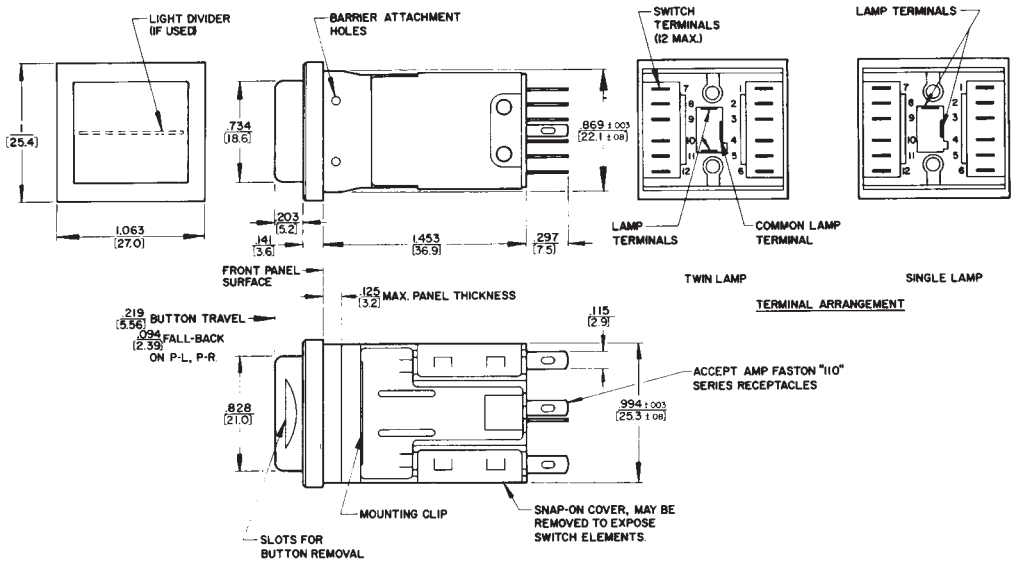


### PUSH-LITE SWITCHES WITH PC TERMINALS

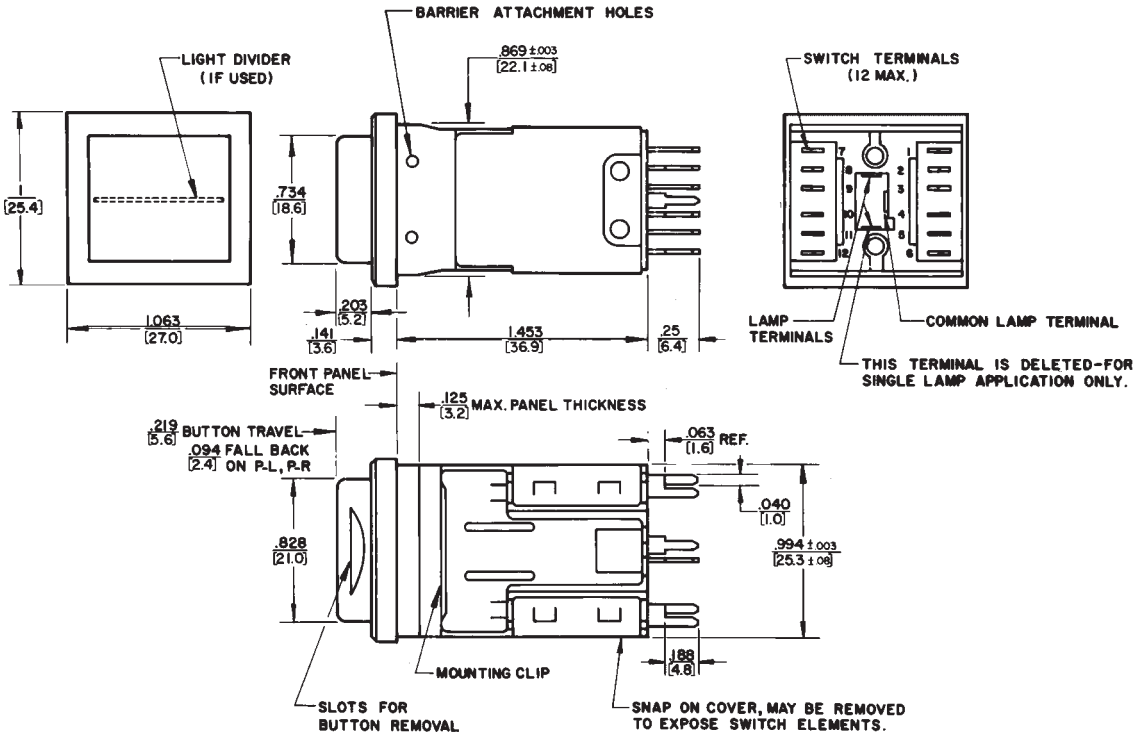


DIMENSIONS ARE FOR REFERENCE ONLY Inch (mm)


® Registered trademark of Switchcraft, Inc.
Note: Contact your Switchcraft Representative for price and delivery

* Please visit the product pages on our website for the most up-to-date product information

# PUSH-LITE® SWITCHES AND INDICATORS (continued)

## OUTLINE DIMENSIONS

### SWITCH AND INDICATOR MOUNTING WITH BARRIERS (See Note)

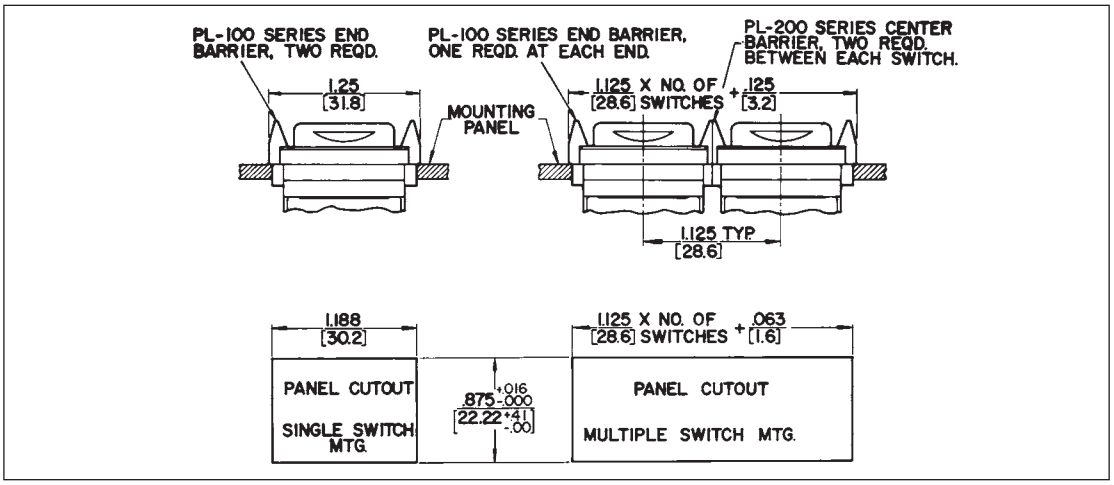


### SWITCH AND INDICATOR MOUNTING WITH BARRIERS (SEE NOTE)

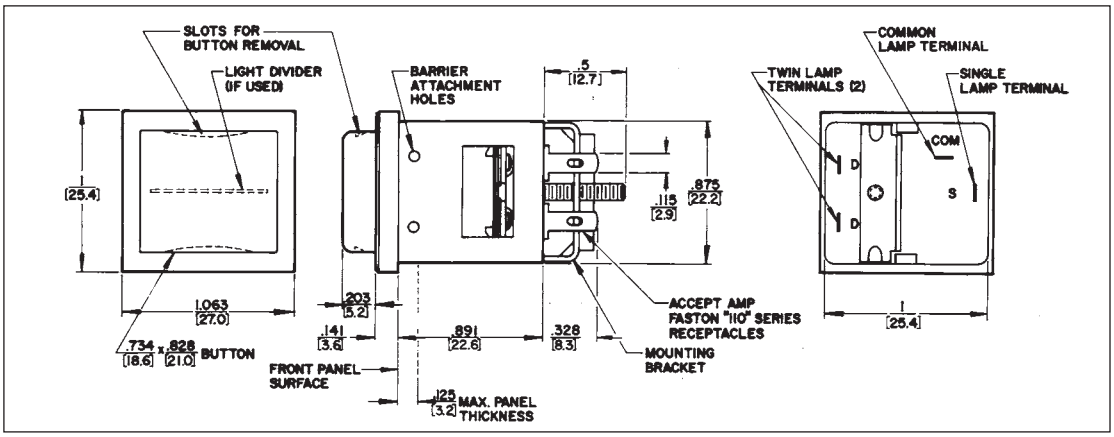


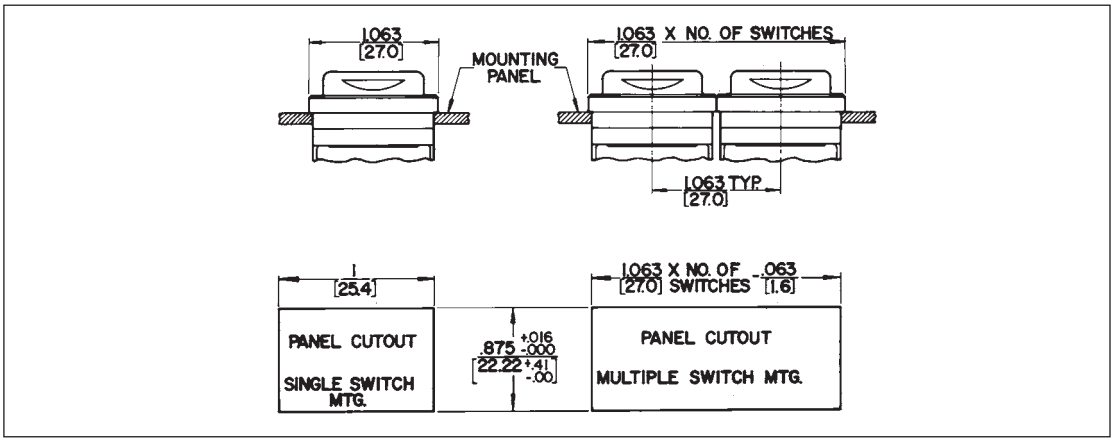


**NOTE: PANEL OPENINGS FORM MULTIPLE ROW SWITCH MOUNTING**

Leave .109" (2.77 mm) minimum width strip between panel-cutouts to assure secure mechanical mounting of adjacent clamp mounting brackets.

DIMENSIONS ARE FOR REFERENCE ONLY Inch (mm)

* Please visit the product pages on our website for the most up-to-date product information

# SLIDE SWITCHES

## DESIGN FEATURES

Switchcraft slide switches are completely field tested and proven in electrical/electronic equipment applications. They are among the highest-quality, lowest-cost slide switches available to “cost-to-quality ratio” conscious engineers.

Precision slide switches are designed and constructed to meet or exceed industry standards for reliability, electrical capacity and life characteristics.

Switchcraft’s slide action switches are ideal for use in critical military and industrial applications such as: instrumentation, test and ground support equipment, computers, control devices. Their attractive styling will enhance the appearance of modern home entertainment equipment.

## UL AND CSA SWITCHES

All slide switches in this catalog with part number suffix “E” are stamped with both UL and CSA marks. Other standard switches are UL recognized (except as noted) and are stamped with the ® mark.

## TERMINALS

Silver-plated terminals are standard; gold-plated terminals are available on special order. Printed circuit terminals in varying lengths from (“A” dimension) .078" (1.98 mm) to 1.25" (31.75 mm) are available on special order. Reference “A” on all switch drawings indicates length of PC terminals. See illustration and notes below for selection of terminals.

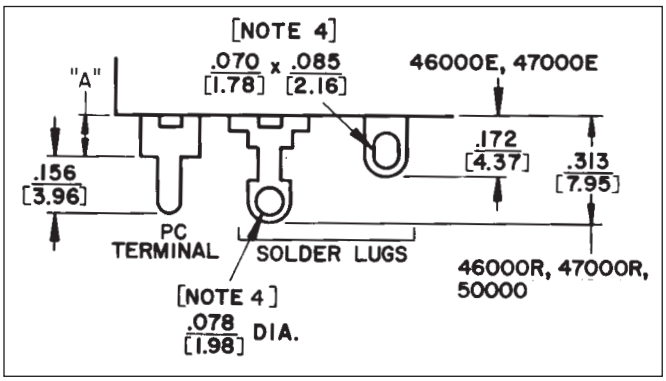


## SPECIAL ORDER SWITCHES FOR CSA APPLICATIONS

The following series of switches (solder lug type) must be assembled with a fishpaper or phenolic solder guard to be CSA certified and stamped. Available on special order only.

Series 46000R, 47000R, 46313R, 49000L, 50000L, Solder guards are not required on these switch series with PC terminals. However, they can only be supplied with CSA stamp on special order. Solder guards are not required on UL only versions. Contact Switchcraft for details.

## SWITCH SERIES IDENTIFICATION

| Series | Name | Number of Positions |
|---|---|---|
| **46000** | General Purpose Slide Switches | 2, 3 |
| **47000** | Tandem Slide Switches | 2; 2 gang |
| **49000** | General Purpose Slide Switches | 3 |
| **50000** | General Purpose Slide Switches | 2 |
| **56200, C56200** | “Tini-Slide” Slide Switches | 2 |
| **56300, C56300** | “Tini-Slide” Slide Switches | 3 |
| **C63000** | Miniature Slide Switches | 4 |
| **EPS1, EPS2 EPS3, EPS4** | European Line Voltage Selector Switches | 2 |

| Series | Description |
|---|---|
| **46000E** | Note 1 |
| **46000R** | Notes 1, 3 |
| **47000E** | Note 1 |
| **47000R** | Notes 1, 3 |
| **49000** | Note 1 |
| **50000** | Notes 1, 3 |
| **56000, C56000** | See page 288 |
| **62000, C62000** | See page 290 |
| **C63000** | See page 290 |
| **EPS1, EPS2 EPS3, EPS4** | See page 291 |

**NOTES:**

1. PC terminal “A” dimension is:
   Standard - .078" (1.98)
   Special - .109" (2.77), .141" (3.58), .160" (4.06), .180" (4.57), .203" (5.16), .234" (5.94), .266" (6.76), .313" (7.95), .391" (9.93), .400" (10.16), .438" (11.12), .484" (12.29), .609" (15.47), .688" (17.48), .719" (18.26), .813" (20.65), .969" (24.61), 1.25" (31.75)
2. .078" (1.98) “A” dimension is not recommended for momentary switches unless clearance hole for return spring is provided in PC board.
3. Accepts up to #14 AWG wire.

DIMENSIONS ARE FOR REFERENCE ONLY Inch (mm)


® Registered trademark of Switchcraft, Inc.
Note: Contact your Switchcraft Representative for price and delivery

* Please visit the product pages on our website for the most up-to-date product information

# SLIDE SWITCHES (continued)

## DESIGN FEATURES (continued)

### SWITCHING

"Double-wipe" slide switches incorporate special "Sliders" to assure wiping action of terminals. This exclusive double wiping action reduces the possibility of oxidation or increased contact resistance. These longer lasting, self-cleaning sliders provide a switch with greater dependability.

The "Sliders", which are formed with precision dies, are U-shaped to give bifurcated contact reliability. "Sliders" are made from a special copper alloy, plated, which assures uniform tensile strength over the entire life of the switch.

Switch terminals are copper alloy, plated. Plating completely encloses the contact area in a silver jacket for positive and continuous electrical operation. A tarnish preventive lubricant coating is applied to the sliders and terminals.

**NOTE:** "double-wipe" action on all switches except Series 62000 and 46256LFR.

### PART NUMBER SUFFIX LETTERS

| Letter | Description |
|---|---|
| B | Special pushbutton type. Depressing (rather than sliding) pushbutton operates the switch. |
| C | Tandem switch with 2 knobs; knobs are internally (mechanically) coupled. |
| D | 3-position switch having internal dust shield. |
| E | Molded terminal board. |
| F | Flush actuator. Screwdriver slotted. All series except 47000 series marked standard as "115/230." Other markings available as special order. Call Switchcraft for details. |
| L | Locking action. |
| M | Momentary (non-lock) action. |
| P | Switch has external plunger. |
| R | Current ratings up to 3A, 125V AC. Phenolic terminal board. |
| S | Shorting type contacts, make-before-break. |
| T | 3-position switches only. One side of neutral has locking action; the other side has momentary action. |

### BASIC SCHEMATIC CHART

Standard arrangement is "Break" before "Make" (non-shorting). "Make" before "Break" (shorting) is available on special order in Series 46000R, 47000R, 49000 and 50000.

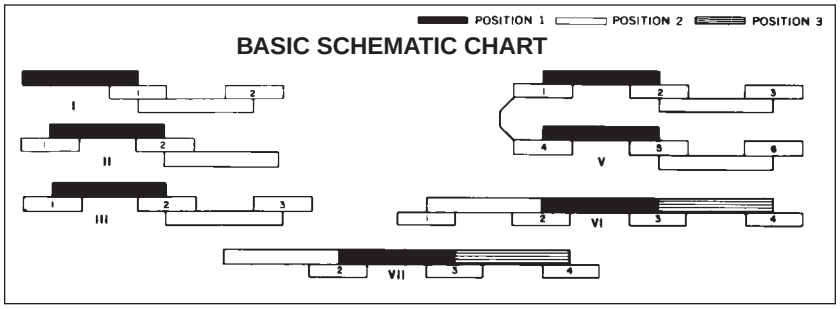


## KNOBS KNOB HEIGHTS Inches (mm)

| Series | Flush | .063 (1.6) | .087 (2.21) | .094 (2.39) | .100 (2.54) | .112 (2.84) | .125 (3.18) | .137 (3.48) | .15 (3.81) | .156 (3.96) | .187 (4.75) | .188 (4.78) | .200 (5.08) | .203 (5.16) | .219 (5.56) | .250 (6.35) | .302 (7.67) | .313 (7.95) | .315 (8) | .328 (8.33) | .344 (8.74) | .375 (9.52) | .406 (10.31) | .440 (11.18) | .453 (11.51) | .469 (11.91) | .487 (12.37) | .500 (12.7) | .531 (13.49) | .563 (14.3) | .594 (15.09) | .719 (18.26) | .750 (19.05) |
|---|---|---|---|---|---|---|---|---|---|---|---|---|---|---|---|---|---|---|---|---|---|---|---|---|---|---|---|---|---|---|---|---|---|
| 46000E 46000R | * (1) | | | ◊ | | | ◊ | | | | | ◊ | | | ◊ | ◊ | | | | | * | ◊ | ◊ | | | | | ◊ | ◊ | | ◊ | ◊ | ◊ |
| 46300R | ◊ | ◊ | | ◊ | | | | | | ◊ | | ◊ | | | ◊ | | | ◊ | | | * | ◊ | | | | ◊ | | ◊ | | ◊ | | ◊ | ◊ |
| 47000 | *(1) | | | ◊ | | | ◊ | | | | | ◊ | | | ◊ | ◊ | | | | | *(2) | ◊ | ◊ | | | | | ◊ | ◊ | | ◊ | | ◊ |
| 49000 | ◊ | | | | | | | | | | | | | | ◊ | | | | | | ◊ | | | | | | | * | ◊ | | | | ◊ |
| 50000 | ◊ | ◊ | | | | | | | | | | ◊ | | | | | | | ◊ | | | | | | | * | | | | | | ◊ | |
| 56200 | | | | | ◊ | | ◊ | | | | | | * | | | | | | ◊ | ◊ | | | | | ◊ | | | ◊ | | | | | |
| 56300 | | | ◊ | | | ◊ | | ◊ | ◊ | | * | | | | | | ◊ | | ◊ | | | | | ◊ | | | ◊ | | | | | | |
| 62000 (2) | | | | | | | | | | | | | | * | | | | | | ◊ | | | | | | | | | | | | | |
| C63000 | | | | | | | | | | | | | | * | | | | | | | | | | | | | | | | | | | |
| EPS (3) | * | | | | | | | | | | | | | | | | | | | | | | | | | | | | | | | | |

* Standard, ◊ Special order
1. Flush screwdriver actuator is standard on numbers 46206LFE, 46206LFR, 46256LFE, 46256LFR and 47227LFR.
2. Numbers 62206L and C62206L have side knob actuator (rather than top knob) standard.
3. EPS switches not available with raised knobs.

DIMENSIONS ARE FOR REFERENCE ONLY Inch (mm)

* Please visit the product pages on our website for the most up-to-date product information

# GENERAL PURPOSE SLIDE SWITCHES

46206LR

46206LFR

## SERIES 46200E, 46200R - 2 POSITION

### SPECIFICATIONS

**Contact Ratings:** 0.5A DC and 3A AC, 125V non-inductive. (Also 1.5A, 250V non-inductive for Series 46000E only). Numbers 46206LFR and 46256LFR are not designed to switch more than 125V, and must be set to desired position before power is applied to equipment, appliance, etc.
**Listings:** UL recognized and CSA certified. Series 46000R switches are CSA marked on special order only. Ref. UL card E40668 and CSA File 28260.
**Housing:** Steel, plated.
**Knob:** Black thermoplastic.
**Terminals and Slider Contacts:** Copper alloy, plated.
**Insulation:** Series 46000E: Thermoplastic.
Series 46000R: Rigid plastic.
**Temperature Range:** -4°F to +158°F (-20°C to +70°C).
**Dielectric Strength:** 1 kV rms @ sea level.
**Insulation Resistance:** 1 k MΩ minimum.

### SPECIAL ORDER FEATURES

1. .344" (8.74 mm) high knobs are standard; other heights available. See chart on page 283.
2. #6-32 and #4-40 tapped flanges for mounting available (except 46204MBR and 46206MP).
3. P.C. terminals.
4. Plunger length on 46206MP - Other lengths from .125" (3.18 mm) to 1.844" (46.84 mm) long.
5. Series 46000R switches are CSA marked on special order only. See page 282.

### PART NUMBERS

| Series 46200E | Series 46200R | Description | Schematic* |
|---|---|---|---|
| ◊46201ME | 46201MR | SPST NO, Momentary | I |
| ◊46202LE | 46202LR | SPST, Locking | II |
| ◊46202ME | ◊46202MR | SPST NC, Momentary | II |
| 46203LE | 46203LR | SPDT, Locking | III |
| ◊46203LSE | ◊46203LSR | SPDT, Locking | III Shorting |
| ◊46203ME | 46203MR | SPDT, Momentary | III |
| 46204LE | ◊46204LR | DPST, Locking | 2-I |
| ◊46204ME | ◊46204MR | DPST NO, Momentary | 2-I |
| 46206LE | 46206LR | DPDT, Locking | 2-III |
| 46206LFE | 46206LFR | DPDT, Locking (1) | 2-III |
| ◊46206LSE | ◊46206LSR | DPDT, Locking | 2-III Shorting |
| ◊46206ME | ◊46206MR | DPDT, Momentary | 2-III |
| - | ◊46206MP | DPDT, Momentary* | 2-III |
| 46256LFE | 46256LFR | DPDT, Locking (1) (2) | V |
| - | ◊C46203LR** | SPDT , Locking | III |
| - | ◊C46204MR** | DPST NO, Momentary | 2-I |
| - | C46206LR** | DPDT, Locking | 2-III |
| - | C46206LFR** | DPDT, Locking (1) | 2-III |

* Contacts are non-shorting, except as noted.
** "C" prefix specifies .078 inch (1.98) PC terminals, no mounting ears.
(1) Recommended for power selection, 115-230 legend, screwdriver slotted actuator minimizes tampering.
(2) Shorting bars installed.
◊ Special order only; contact Switchcraft

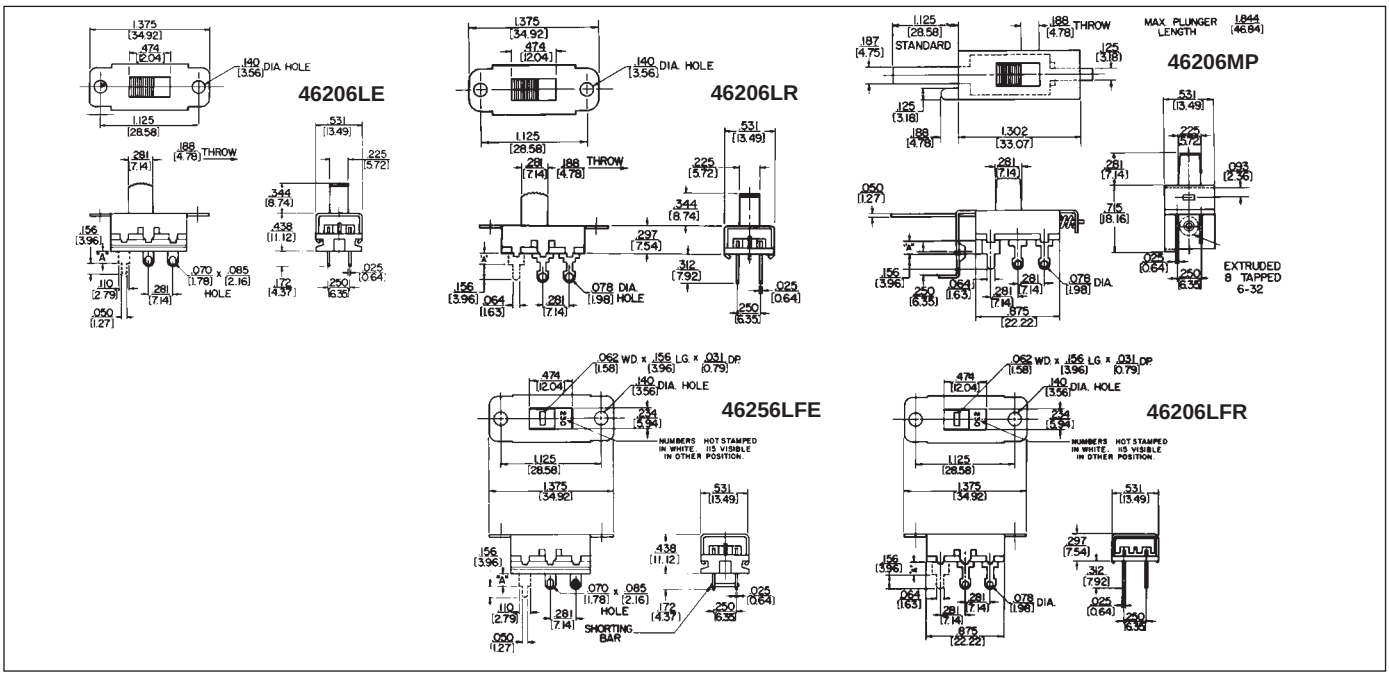


DIMENSIONS ARE FOR REFERENCE ONLY Inch (mm)


® Registered trademark of Switchcraft, Inc.
Note: Contact your Switchcraft Representative for price and delivery

* Please visit the product pages on our website for the most up-to-date product information

# GENERAL PURPOSE SLIDE SWITCHES (continued)

## SERIES 46300R - 3-POSITION

Three-position switches offer locking-locking, momentary-momentary and locking-momentary action for talk-listen applications. All switches have positive center detent and shutter type dust cover to prevent dirt and dust from contaminating switch contacts.

## SPECIFICATIONS

**Contact Ratings:** 0.5A DC and 3A AC, 125V non-inductive.
**Listings:** UL recognized, card E40688 CSA certified (marked) switches available on special order only. See page 282.
**Housing:** Steel, plated.
**Detent Spring:** Music wire.
**Shim:** Black vulcanized fiber.
**Knob:** Black thermoplastic.
**Terminals & Slider Contacts:** Copper alloy, silver-plated.
**Insulation:** Phenolic.
**Temperature Range:** -4°F to +158°F (-20°C to +70°C).
**Dielectric Strength:** 1 kV rms @ sea level.
**Insulation Resistance:** 1 k MΩ minimum.

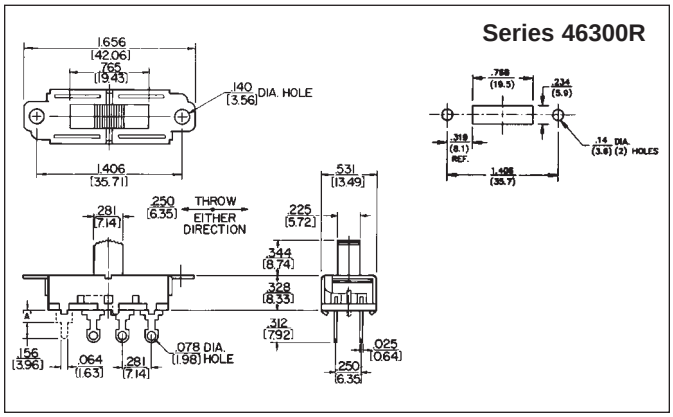


## SPECIAL ORDER FEATURES:

1. .344" (8.74 mm) high knobs are standard; other heights available. See chart on page 283.
2. Series 46000R switches are CSA marked on special order only. See page 282.

## PART NUMBERS

| Part** Number | Circuitry | Action Positions* | | | Schematic |
|---|---|---|---|---|---|
| | | #1 | Center | #2 | |
| **46311LDR** | SPTT | L | L | L | VI |
| **◊46311MDR** | SPTT | M | L | M | VI |
| **◊46311TDR** | SPTT | L | L | M | VI |
| **46313LDR** | DPTT | L | L | L | 2-VI |
| **46313MDR** | DPTT | M | L | M | 2-VI |
| **46313TDR** | DPTT | L | L | M | 2-VI |

◊ Special order only; contact Switchcraft for price and delivery.
* L - Locking; M - Momentary.
** "C" prefix specifies .078" (1.98) PC terminals, no mounting ears.

## SOLDER GUARDS

**Insulating Solder Guards, P-2370** (2-position); and ◊P-2633 (3-position); slip over solder lug terminals and prevent solder splashes from entering interior (contact area) of switch. Made of fishpaper .01" (.25 mm) thick, Solder Guard slips over terminals quickly and easily. Precision punched slots lock onto terminals, and rectangular shape conforms with dimension of switch terminal board. Minimizes costly production line rework.

**Solder Guards can be used on:**

- General Purpose, Series 46000R
- Tandem, Series 47000R.

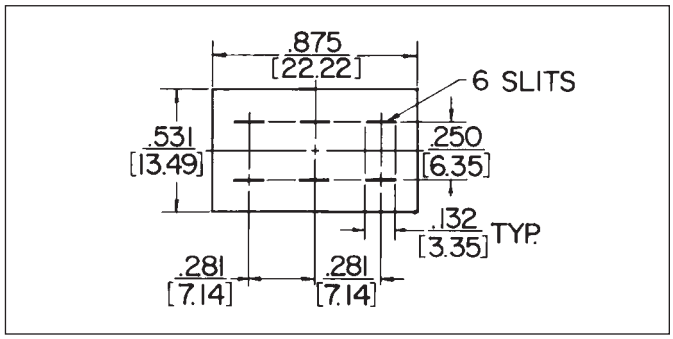


DIMENSIONS ARE FOR REFERENCE ONLY Inch (mm)

* Please visit the product pages on our website for the most up-to-date product information

# GENERAL PURPOSE SWITCHES - TANDEM

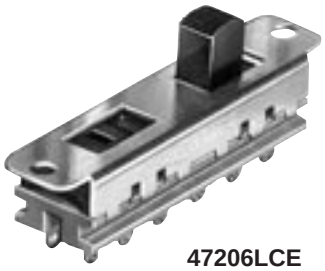

47206LCE

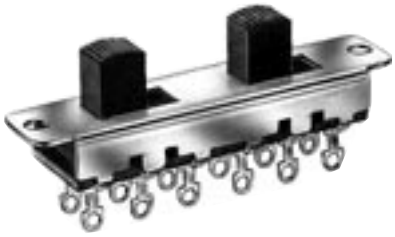

47206LR

47227LFR

## SERIES 47200E, 47200R - 2 POSITION

Space saving, two-gang slide switches are contained in one housing. Switching is locking type with non-shorting contacts.

## SPECIAL ORDER FEATURES

1. .344" (8.74 mm) high knobs or flush knobs are standard, depending on switch selected; other heights available. See chart on page 283.
2. Series 47000R switches are CSA marked on special order only. See page 282.

## SPECIFICATIONS

**Contact Ratings:** 0.5A DC and 3A AC, 125V non-inductive, (Also 1.5A, 250V non-inductive for Series 47000E only.) 47227LFR switches are not designed to switch more than 125V, and must be set to desired position before power is applied to equipment or appliance.
**Listings:** UL recognized, card E40668, and CSA certified (card 28260). Series 47000R switches are CSA certified on special order only. See page 282.
**Housing:** Steel, plated.
**Knob:** Black thermoplastic.
**Terminals and Slider Contacts:** Copper alloy, silver-plated.
**Insulation:** Series 47000E - Thermoplastic.
Series 47000R - Rigid plastic.
**Temperature Range:** -4°F to +158°F (-20°C to +70°C).
**Dielectric Strength:** 1 kV rms @ sea level.
**Insulation Resistance:** 1 k MΩ minimum.

## PART NUMBERS

| Series 47200E | Series 47200R | Description | Schematic | |
|---|---|---|---|---|
| ◊47202LE | ◊47202LR | SPST - SPST | II | II |
| ◊47203LE | ◊47203LR | SPDT - SPDT | III | III |
| ◊47204LE | ◊47204LR | DPST - DPST | 2-I | 2-I |
| ◊47204LCE | ◊47204LCR | DPST - DPST | 2-I | 2-I |
| ◊47206LE | ◊47206LR | DPDT - DPDT | 2-III | 2-III |
| ◊47206LCE | ◊47206LCR | DPDT - DPDT | 2-III | 2-III |
| - | ◊47215LR | SPST - SPDT | II | III |
| - | ◊47215LCR | SPST - SPDT | II | III |
| - | ◊47217LR | SPST - DPST | II | 2-II |
| - | ◊47217LCR | SPST - DPST | II | 2-II |
| - | ◊47221LR | SPDT - DPST | III | 2-II |
| - | ◊47221LCR | SPDT - DPST | III | 2-II |
| | ◊47227LFE | DPDT - DPDT | 2-V | |
| | ◊47227LFR | DPDT - DPDT | 2-V | |

**NOTE:** Series 47200E and 47200R - All switches have two independent knobs, except:
- 47204LE, 47204LCR, 47206LCE and 47206LCR have one knob and one flush actuator.
- 47227LFE and 47227LFR have internal mechanical coupling and two flush, slotted screwdriver actuators.

◊ Special order only; contact Switchcraft

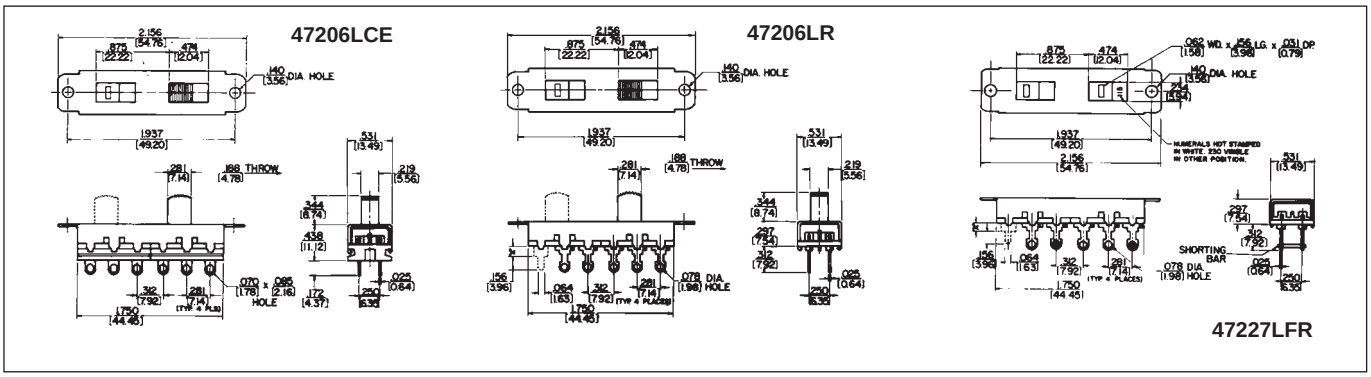


DIMENSIONS ARE FOR REFERENCE ONLY Inch (mm)


® Registered trademark of Switchcraft, Inc.
Note: Contact your Switchcraft Representative for price and delivery

* Please visit the product pages on our website for the most up-to-date product information

# GENERAL PURPOSE SLIDE SWITCHES (continued)

## SERIES 49300 - 3 POSITION

Large, heavy duty, three and four pole slide switches. Standard mounting clearance is .141" (3.58 mm). Series 49300L, non-shorting contacts; Series 49300LS, shorting contacts.

## SPECIFICATIONS

**Contact Ratings:** 0.5A DC and 3A AC, 125V non-inductive.
**Listings:** UL recognized (card E40668); CSA certified (marked) switches available on special order only. See page 282.
**Housing:** Steel, plated.
**Detent Shim:** Copper alloy.
**Knob:** Black thermosetting plastic.
**Terminals and Slider Contacts:** Copper alloy, silver-plated.
**Insulation:** Rigid plastic.
**Temperature Range:** -4°F to +158°F (-20°C to +70°C).
**Dielectric Strength:** 1 kV rms @ sea level.
**Insulation Resistance:** 1 k MΩ minimum.

## SPECIAL ORDER FEATURES

1. .5" (12.7 mm) high knobs are standard; other heights available. See chart on page 283.
2. #4-40 extruded and tapped mounting holes available.
3. Series 49300L switches are CSA marked on special order only. See page 282.

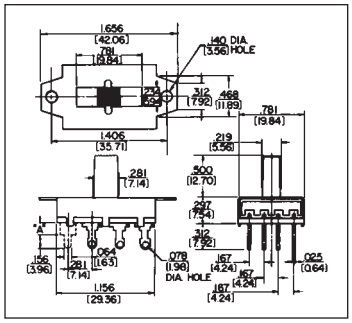

49331L

### PART NUMBERS

| Part Number | UL & CSA Listing | Description | Schematic |
|---|---|---|---|
| ◊49309L | Yes | 3-PDT, Locking* | 3-VII |
| ◊49309LS | No | 3-PDT, Locking* | 3-VII |
| ◊49329L | Yes | 3-PTT, Locking | 3 -VI |
| ◊49329LS | No | 3-PTT, Locking | 3 -VI |
| ◊49312L | Yes | 4-PDT, Locking* | 4-VII |
| ◊49312LS | No | 4-PDT, Locking* | 4-VII |
| ◊49331L | Yes | 4-PTT, Locking | 4 -VI |
| ◊49331LS | No | 4-PTT, Locking | 4 -VI |

* 3rd position is off.
◊ Special order only; contact Switchcraft.

## SERIES 50200 - 2 POSITION

A larger 2 position "double wipe" slide switch offering three and four poles of switching and locking or momentary action. Series 50200L and M, non-shorting; Series 50200LS and MS, with shorting contacts.

## SPECIFICATIONS

**Contact Ratings:** 0.5A DC and 3A AC, 125V non-inductive.
**Listings:** UL recognized (card E40668); CSA certified (card 28260). Series 50200L switches are CSA marked on special order only. See page 282.
**Housing:** Steel, plated.
**Detent Shim:** Copper alloy.
**Knob:** Black thermosetting plastic.
**Terminals and Slider Contacts:** Copper alloy, plated.
**Insulation:** Rigid plastic.
**Temperature Range:** -4°F to +158°F (-20°C to +70°C).
**Dielectric Strength:** 1 kV rms @ sea level.
**Insulation Resistance:** 1 k MΩ minimum.

## SPECIAL ORDER FEATURES

1. .344" (8.74 mm) high knobs are standard; other heights available. See chart on page 283.
2. 50212LF available with flush, screwdriver slotted actuator and has 4 PDT locking action.
3. Extruded and tapped 4-40 or 6-32 holes available.
4. Series 50200L switches are CSA marked on special order only. See page 282.

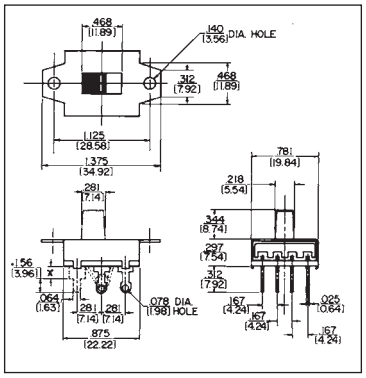

50209L

### PART NUMBERS

| Part Number | Description | Schematic |
|---|---|---|
| ◊50207L | 3PST - Locking | 3-I |
| ◊50207M | 3PST, N.O. Momentary | 3-I |
| ◊50208L | 4PST, Locking | 4-I |
| 50209L<br>◊50209LS | 3PDT, Locking | 3-III |
| ◊50209M<br>◊50209MS | 3PDT, Momentary | 3-II |
| 50212L<br>◊50212LS | 4PDT, Locking | 4-III |

◊ Special order only; contact Switchcraft.

DIMENSIONS ARE FOR REFERENCE ONLY Inch (mm)

* Please visit the product pages on our website for the most up-to-date product information

# MINIATURE SLIDE SWITCHES

SPECIAL ORDER

56206L1

C56206L2

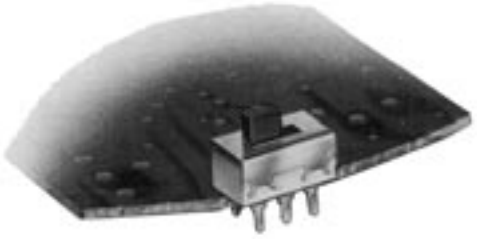

C56206L2

## SERIES 56200, C56200 - 2 POSITION

"Tini-Slide" slide switches have Exclusive SNAP SLIDE lifting and wiping action. This unique, positive action combines the best features of "snap" and "slide" movements into the design of a superior switch. Pitting, burning and contamination are minimized. Contacts lift through an air gap, drop on stationary contacts, and slide, wiping themselves clean. Subminiature size is ideal where useable space is at a premium.

## SPECIFICATIONS

**Contact Ratings:** 0.5A, 125V AC or DC, non-inductive. Minimum life at rated load 6000 cycles. Resistance after 6000 cycles at rated load is 50 milliohms maximum.
**Terminals:** PC Type - silver-plated. Each terminal has standoff shoulder for stable mounting and space for board clearance.
**Mounting:** Flange, (56206L1 and 56206L2) - .1" (2.54 mm) holes for screw or mounting rivet. PC - Direct mounting to PC boards up to .093" (2.36 mm) thick.
**Knob:** Molded thermoplastic (UL 94V-1).
**Terminal Board:** Molded thermoplastic (UL 94V-0).
**Terminals:** Copper alloy, silver-plated.
**Contact Sliders:** Copper alloy.
**Temperature Range:** -4°F to +158°F (-20°C to +70°C).
**Dielectric Strength:** 1 kV rms @ sea level.
**Insulation Resistance:** 1 k MΩ minimum.

## SPECIAL ORDER FEATURES

1. .2" (5.08 mm) high knobs are standard; other heights available on special order. See page 283.
2. Red and white knobs available.
3. Mounting flanges with .1" (2.54 mm) diameter holes on C56206L1 or C56206L2. Flange holes tapped #4-40 on 56206L1 or 56206L2 (where production quantities warrant).
4. UL stamped on special order.

## PART NUMBERS

| Part Number | Dimension "B" Inch (mm) | Description | Schematic |
|---|---|---|---|
| **56206L1** | - | DPDT, Locking | 2-III |
| **56206L2** | - | DPDT, Locking | 2-III |
| **C56206L1** | .573 (14.55) | DPDT, Locking | 2-III |
| **C56206L2** | .352 (8.94) | DPDT, Locking | 2-III |

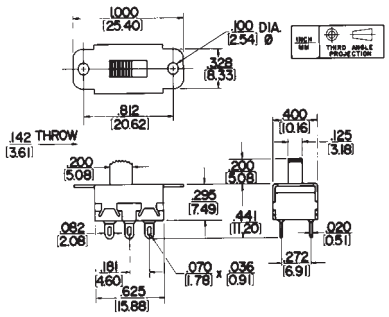


56206L2

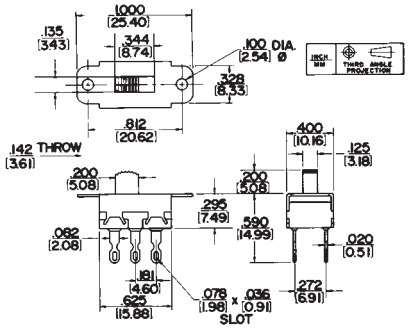


56206L1

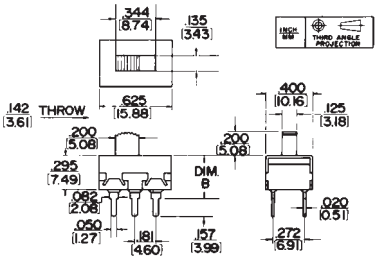


C56206L1 & 2

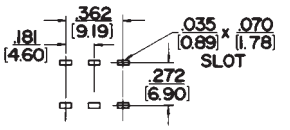


RECOMMENDED PC BOARD LAYOUT (Component Side)

DIMENSIONS ARE FOR REFERENCE ONLY Inch / (mm)



® Registered trademark of Switchcraft, Inc.
Note: Contact your Switchcraft Representative for price and delivery

* Please visit the product pages on our website for the most up-to-date product information

# MINIATURE SLIDE SWITCHES (continued)

56313L1

56313L2

C56313L1

C56313L2

## SERIES 56300,C56300 - 3 POSITION

Series 56300 "Tini-Slide" switches provide ultra-reliable 3-position switching. They afford maximum space savings in military, industrial and consumer applications, such as instrumentation, test and ground support equipment, appliances, computers, and control devices.

## SPECIFICATIONS

**Contact Ratings:** 0.5A, 125V AC or DC, non-inductive. Minimum switch life is 6000 cycles. Resistance after 6000 cycles at rated load is 50 milliohms maximum.
**Terminals:** Solder Lugs - 56313L1 with wrap around notch; 56313L2 with solder lug. PC - .585" (14.68 mm) "B" dimension and .364" (9.24 mm) "B" dimension.
**Mounting:** Mounting ears for mounting to chassis of panels with screws or rivets (not supplied). Switches with PC terminals have stand-off shoulders for solid PC mount.
**Knob:** Molded thermoplastic (UL 94HB).
**Terminal Board:** Molded thermoplastic (UL 94V-0).
**Terminals:** Copper alloy, silver-plated.
**Contact Sliders:** Copper alloy.
**Temperature Range:** -4°F to +158°F (-20°C to +70°C).

**Dielectric Strength:** 1 kV rms @ sea level.
**Insulation Resistance:** 1 k MΩ minimum.

## SPECIAL ORDER FEATURES

1. .187" (4.75 mm) high knob is standard; Other heights available on special order. See page 283.
2. Red and white knobs available.
3. Two mounting variations:
   a. Tapped #4-40 holes on mounting ears for machine screws.
   b. Mounting ears with .1" (2.54 mm) diameter holes on switches with PC terminals.

## PART NUMBERS

| Part Number | Dimension "B" Inch (mm) | Description | Schematic |
|---|---|---|---|
| 56313L1 | - | DPTT, Locking | 2-VI |
| 56313L2 | - | DPTT, Locking | 2-VI |
| C56313L1 | .585(14.85) | DPTT, Locking | 2-VI |
| C56313L2 | .364 (9.24) | DPTT, Locking | 2-VI |

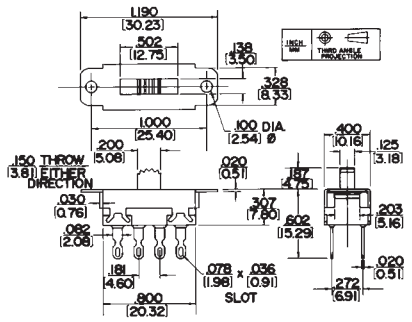


56313L1

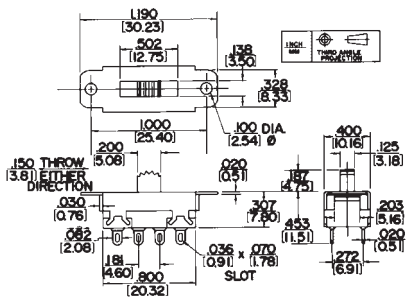


56313L2

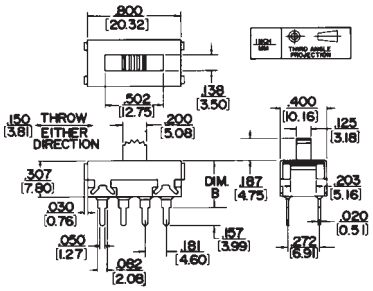


56313L1 & L2

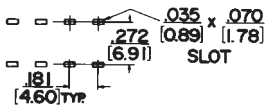


RECOMMENDED PC BOARD LAYOUT (Component Side)

DIMENSIONS ARE FOR REFERENCE ONLY Inch (mm)

* Please visit the product pages on our website for the most up-to-date product information

# SIDE-SLIDE®/MINIATURE SLIDE SWITCHES

62206L

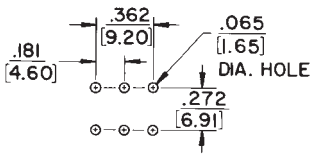


RECOMMENDED PC BOARD LAYOUT (Component Side)

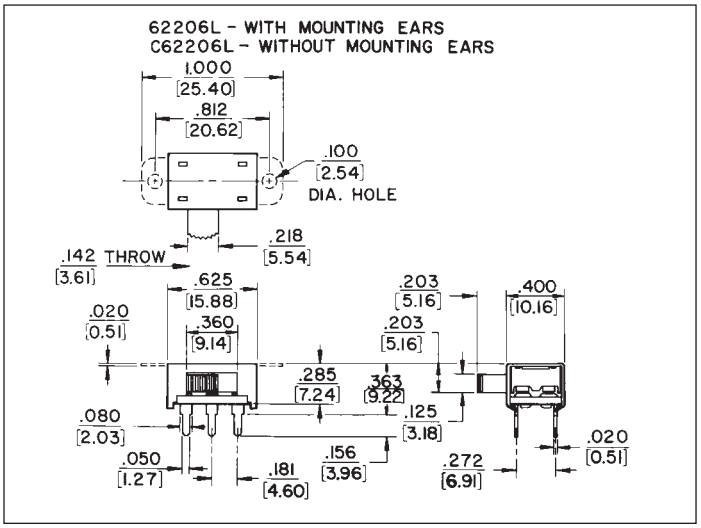


## SERIES 62200 - 2 POSITION

2-position locking action with side knob actuator. Side knob provides low profile, saving space on PC boards.

## SPECIFICATIONS

**Contact Ratings:** 0.5A, 125V AC or DC.
**PC Terminals:** Copper alloy, silver plated.
**Housing:** Steel, plated.
**Knob:** Molded thermoplastic.
**Terminal Board:** Rigid plastic.
**Sliders:** Copper alloy, plated.
**Dielectric Strength:** 1000 V rms.
**Insulation Resistance:** 1 k MΩ minimum.

## SPECIAL ORDER FEATURES

1. Various knob heights available on special order.
2. Various lengths available on special order.

## PART NUMBERS

| Part Number | Description | Schematic |
|---|---|---|
| ◊62206L | DPDT, with mounting ears, Locking | 2-III |
| C62206L | DPDT, without mounting ears, Locking | 2-III |

◊ Special order only; contact Switchcraft.

# MINIATURE SLIDE SWITCHES

## SERIES C63200 - 2 POSITION, 4 POLE

C63200 switches designed for applications, such as: instrumentation, test and ground support equipment, computers, data communications and medical equipment. PC mounting on standard industry .100" (2.54 mm) x .200" (5.08 mm) centers. Mounts on PC boards up to .093" (2.36 mm) thick. Molded black thermoplastic knobs. Terminals are copper alloy, gold-plated on contact area, tinned on terminal end.

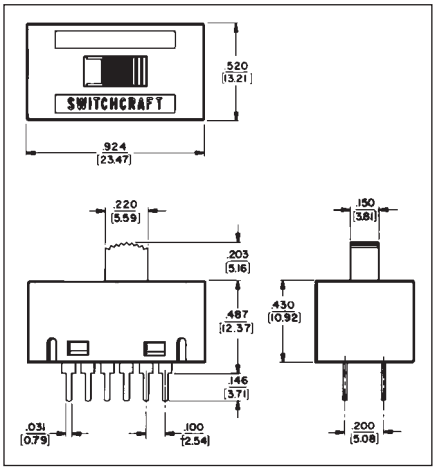


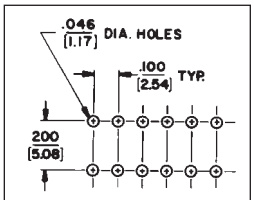


RECOMMENDED PC BOARD LAYOUT (Component Side)

| Part Number | Action | Switching | Ratings | Schematic | Terminals |
|---|---|---|---|---|---|
| C63212L | Locking | 4PDT | 300mA max. 30V AC | 4-III | Copper alloy, gold-plated on contact area, tinned on terminal end |

DIMENSIONS ARE FOR REFERENCE ONLY Inch (mm)


® Registered trademark of Switchcraft, Inc.
Note: Contact your Switchcraft Representative for price and delivery

* Please visit the product pages on our website for the most up-to-date product information

# EUROPEAN LINE VOLTAGE SELECTOR SWITCHES

RED ACTUATOR

RED ACTUATOR

EPS1PC3

EPS2PC2

EPS3SL1

EPS4PC3

## SERIES EPS1, EPS2, EPS3, EPS4 - 2 POSITION

European Power Selector Switches are designed for quick, easy programming/selection of 115V-230V primary power. These switches provide OEM designers with an excellent selection of PC and solder lug terminals and ratings up to 10A, 125V AC rating for electrical/electronic equipment and systems headed for the INTERNATIONAL marketplace.

## HOUSING AND ACTUATOR

Switches have positive, double detents for “sure” locking into position. Screwdriver slot actuator virtually eliminates the possibility of accidental operation and minimizes tampering. Molded-in legends are: 115-230V. Terminals are staked into housing.

## SPECIFICATIONS

**Contact Ratings:** EPS1, EPS2 - 2A, 250V AC and 4A, 125V AC. EPS3, EPS4 - UL and CSA - 10.1A, 125V; 5A, 250V. VDE - 10A, 250V.
**Listings:** UL and CSA recognized, UL card E40668; CSAcard 28260. 2A, 250V AC is VDE listed, VDE #13707 (for European applications). Designed to conform to requirements of CEE (International Commission on Rules for the Approval of Electrical Equipment, Publication 24) and the IEC (International Electrotechnical Commission).
**Housing:** Molded black glass-reinforced plastic.
**Actuator and Cover:** Molded thermoplastic.
**Terminals:** Copper alloy, silver-plated.
**Slider Contacts:** EPS1, EPS2 - Bi-Metal, silver on copper alloy. EPS3, EPS4 - Copper alloy with silver cadmium oxide inlay.
**Temperature Range:** -4°F to +158°F (-20°C to +70°C).
**Dielectric Strength:** 2kV rms @ sea level.
**Insulation Resistance:** 1 k MΩ minimum.

## SPECIAL ORDER FEATURES

Series EPS actuators having legends other than 115V and 230V are available on special order.
**NOTE:** Contact Switchcraft for details.

## PART NUMBERS

### Series EPS1

| Part Number | Terminals | Dimension “B” Inch (mm) | Schematic |
|---|---|---|---|
| ◊EPS1PC1 | Straight PC | .681 (17.297) | 2-III |
| ◊EPS1PC2 | Straight PC | .719 (18.263) | 2-III |
| EPS1PC3 | Right-Angle PC | - | 2-III |
| EPS1SL1 | Solder Lugs | - | 2-III |

◊ Special order only; contact Switchcraft.

### Series EPS2

| Part Number | Description | Dimension “B” Inch (mm) | Schematic |
|---|---|---|---|
| EPS2PC1 | Straight PC | .730 (18.542) | 2-III |
| EPS2PC2 | Straight PC | .768 (19.507) | 2-III |
| EPS2PC3 | Right-Angle PC | - | 2-III |

### Series EPS3

| Part Number | Terminals | Dimension “B” Inch (mm) | Schematic |
|---|---|---|---|
| EPS3PC1 | Straight PC | .681 (17.297) | 2-III |
| EPS3PC2 | Straight PC | .719 (18.263) | 2-III |
| EPS3PC3 | Right-Angle PC | - | 2-III |
| EPS3SL1 | Solder Lugs | - | 2-III |

### Series EPS4

| Part Number | Description | Dimension “B” Inch (mm) | Schematic |
|---|---|---|---|
| EPS4PC1 | Straight PC | .730 (18.542) | 2-III |
| EPS4PC2 | Straight PC | .768 (19.507) | 2-III |
| EPS4PC3 | Right-Angle PC | - | 2-III |

DIMENSIONS ARE FOR REFERENCE ONLY Inch (mm)

* Please visit the product pages on our website for the most up-to-date product information

# EUROPEAN LINE VOLTAGE SELECTOR SWITCHES (continued)

**EUROPEAN LINE VOLTAGE SELECTOR SWITCH**

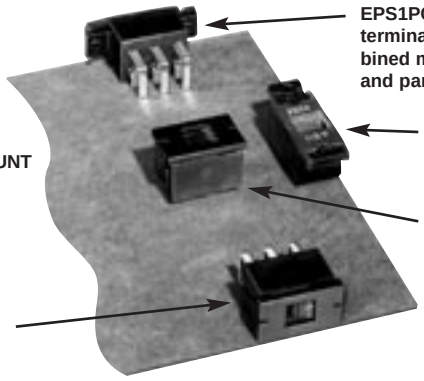

**PC MOUNT**

**EPS1PC3 - Long, right-angle PC terminals and flanges for combined mounting to PC board and panel/chassis.**

**EPS1PC1 - Short, PC terminals and flanges for combined mounting to PC board and panel/chassis.**

**EPS2PC2 - Long, PC terminals for direct mounting to PC board only.**

**EPS2PC3 - Long, right-angle PC terminals for combined PC terminating and mounting.**

**PANEL/CHASSIS MOUNT**

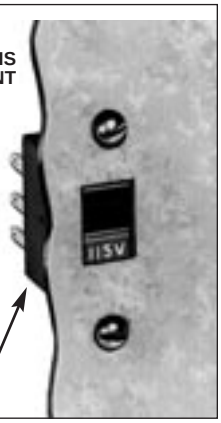

**EPS1SL1 - Solder lug terminals and mounting flanges for panel/chassis mount.**

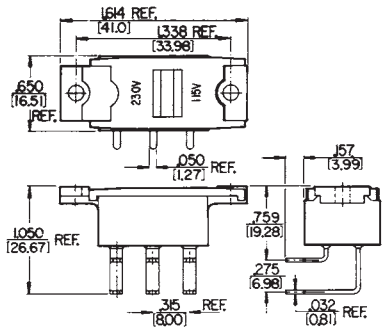


**EPS1PC3**

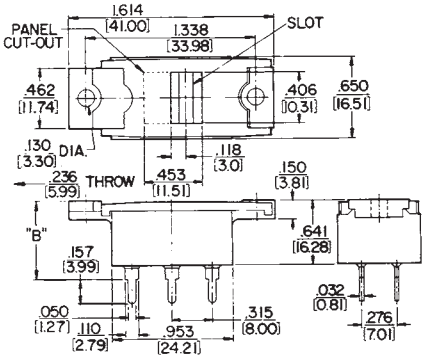


**EPS1PC1 & PC2**

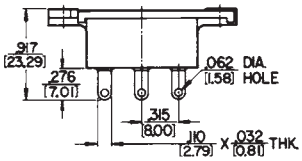


**EPS1SL1**

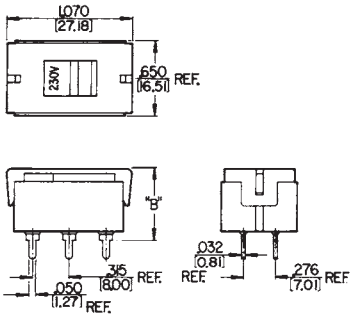


**EPS2PC1 & PC2**

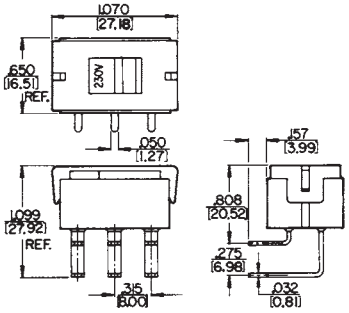


**EPS2PC3**

**PANEL OPENING DATA**

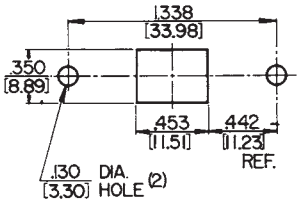


**SERIES EPS1**

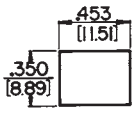


**SERIES EPS2**

**RECOMMENDED PC BOARD LAYOUT (Component Side)**

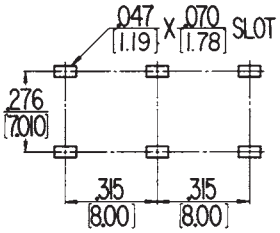


DIMENSIONS ARE FOR REFERENCE ONLY Inch / (mm)



® Registered trademark of Switchcraft, Inc.

Note: Contact your Switchcraft Representative for price and delivery

* Please visit the product pages on our website for the most up-to-date product information

# EUROPEAN LINE VOLTAGE SELECTOR SWITCHES (continued)

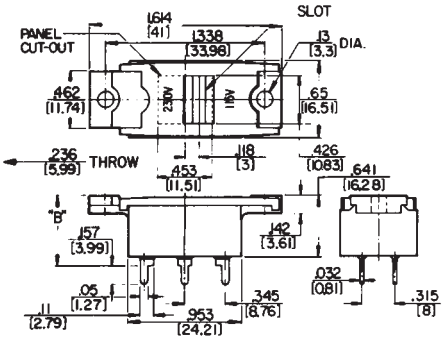


EPS3PC1 & EPS3PC2

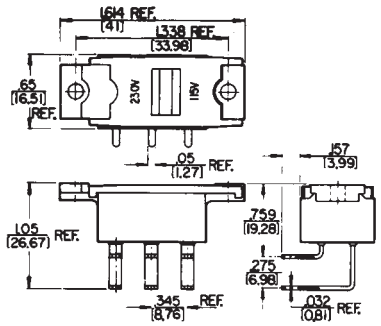


EPS3PC3

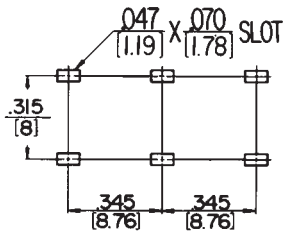


RECOMMENDED PC BOARD LAYOUT (Component Side)

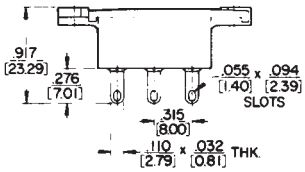


EPS3SL1

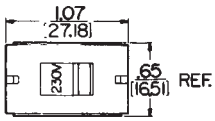


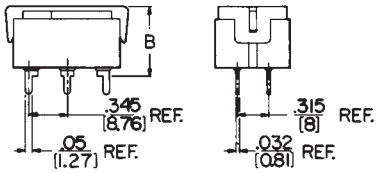


EPS4PC1 & EPS4PC2

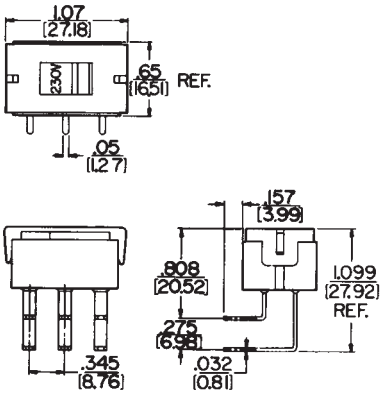


EPS4PC3

PANEL OPENING DATA

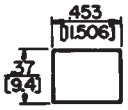


SERIES EPS4

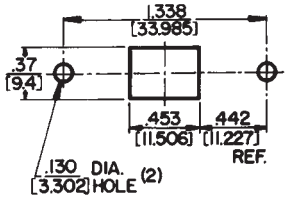


SERIES EPS3

DIMENSIONS ARE FOR REFERENCE ONLY Inch (mm)

* Please visit the product pages on our website for the most up-to-date product information

# LEVER SWITCHES

## DESIGN FEATURES

High quality, field-proven Switchcraft® lever switches are available in a wide selection of illuminated and non-illuminated versions, 2- and 3-position, locking and non-locking functions can be provided. Switchcraft illuminated lever switches feature choice of colors, wide selection of switching circuits, single lamp illumination and ease of mounting and lamp replacement.

All switches utilize nickel silver springs without "form" at point of flexing to insure long spring life. The springs are assembled into a conventional stack assembly, insulated from each other by phenolic spacers with plastic tubing press-fit through each stack, insuring correct alignment of contacts and providing high insulation resistance.

## APPLICATIONS

Various front panel switching applications on computers, telecommunications systems, industrial control equipment, intercoms, ground support systems, medical electronics, scientific instruments, broadcast consoles and test instrumentation.

## CONTACTS

Below are listed the basic contacts available on switches in this catalog:

1. Fine silver contacts rated at 2A, 200W (maximum) AC non-inductive load.
2. Welded cross bar silver contacts rated at 3A, 300W (maximum) AC non-inductive load.
3. Welded cross bar palladium contacts rated at 2A, 200W (maximum) AC non-inductive load.
4. Welded cross bar gold alloy contacts rated at up to 1A, 100W (maximum) AC non-inductive load. (Dry circuit applications.)

## BASIC CONTACT FORMS

Below are the basic contact forms available standard on all Switchcraft Lever Switches. Specify circuits needed by referring to the letter identification and respective location on frame. See dimensional drawings for stack switch location.

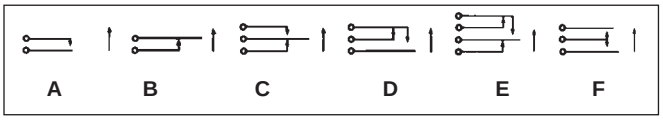


To avoid ordering special switches it is possible to use a larger standard circuit, providing the circuit fulfills your requirements. Circuit Form K is widely used in talk-listen (intercom) function applications. In normal position (neutral), switch does not contact upper or lower contact spring. During typical operation, lever is held in upper (momentary) position while speaking. Releasing lever allows switch to return to neutral. For listening, lever is moved to down (locking) position. Lever is manually returned to neutral when finished.

SCHEMATIC DIAGRAM FORM K

## ORDERING STANDARD SWITCHES

Order lever switches by part number from pages 295 through 298.

## LAMP DATA

Lever-Lite® switches use T-1 3/4 flange base lamps which are available from commercial sources.

## ORDERING SPECIAL SWITCHES

**Lever Switches**

Should you desire a special version of any Switchcraft® lever switch not shown here, we require the following information:

1. Switch series.
2. Number of positions.
3. Mechanical action (locking, non-locking, etc.).
4. Contact configuration for each position.
5. Type of contact material.
6. Color sequence (Lever-Lite III).

## UL RECOGNIZED LEVER SWITCHES

Seven series of Switchcraft lever switches are UL recognized. These switches are available on special order to fulfill your switching requirements which specifically require UL listed switching devices.

1. Series 12000
2. Series 41000

**NOTE:** Refer to switch series in this catalog for full mechanical specifications and additional standard and special features.

DIMENSIONS ARE FOR REFERENCE ONLY Inch (mm)


® Registered trademark of Switchcraft, Inc.
Note: Contact your Switchcraft Representative for price and delivery

* Please visit the product pages on our website for the most up-to-date product information

## LEVER SWITCHES (continued)

### LEVER-LITE® III
### SERIES 84000 - ILLUMINATED LEVER SWITCHES

Lever-Lite® III illuminated lever switches are designed for front-of-panel mounting, relamping, terminating, color changes and removal. A minimum of time is required to install singly, in rows, or in matrix arrays to meet a wide variety of switching applications. 2- and 3-position types are available in non-locking functions. Mounts on .875" (22.22 mm) horizontal centers or 1.5" (38.1 mm) vertical centers. Talk-listen (intercom) function is also available. Illumination technique provides a different color for each lever position.

### LAMPS

Standard T 1-3/4" midget flange-base lamps (not supplied) are available in voltages up to 28V.

### SPECIAL ORDER FEATURES

1. Talk-Listen (Intercom) function.
2. Welded cross bar gold alloy for dry circuit and silver contacts are available. See page 294.

### ILLUMINATION

A single internal lamp provides brilliant lever lighting in any color required. Standard factory installed color filters are provided as follows: Series 84000, Multi-Color Illumination 2-position - Amber (neutral position); green (down position). 3-position - Red (up position); amber (neutral position); green (down position). One-color (all positions) and non-illuminated switches can be specified on special order. Switchcraft will install filters for non-standard illumination requirements at nominal cost on special order.

### MOUNTING

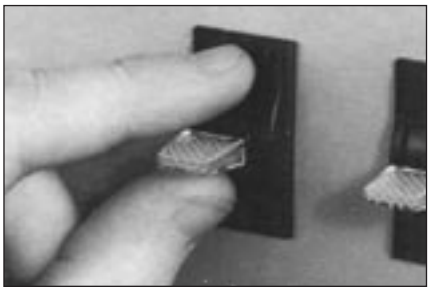

Grasp fingernail slots on opposite sides of escutcheon and snap out. Next, grasp lever and pull lever assembly free. Insert switch into panel hole.

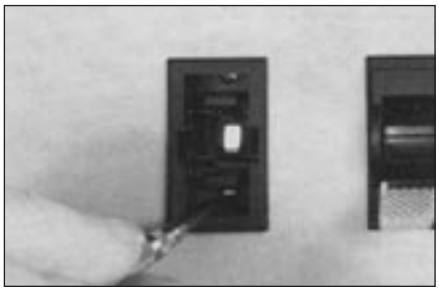

Turn two internal screws clockwise with screwdriver to securely mount switch to panel.

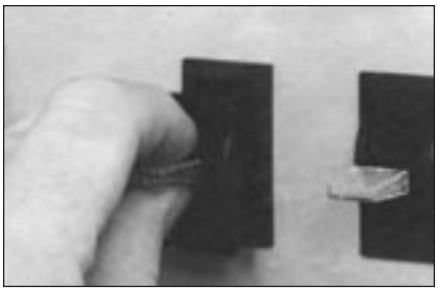

Replace lever assembly and “snap” escutcheon into place. Installation complete!

### RELAMPING/REPLACING COLOR FILTERS

Lever-Lite III switches are designed for simplified lamp installation and replacement, and color filter changes or custom installation in the field or on the OEM production line. Lamps and filters may be changed at any time with ease and without dismounting switch from panel or disturbing wiring.

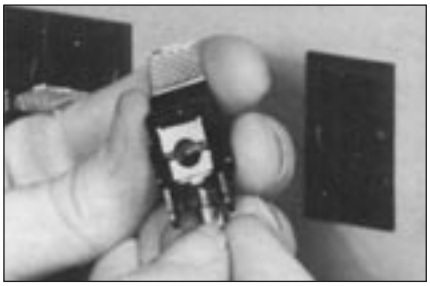

Remove escutcheon and lever assembly. (see “MOUNTING” above) For relamping, pull lamp out of retainer with finger-tip. Replace lamp.

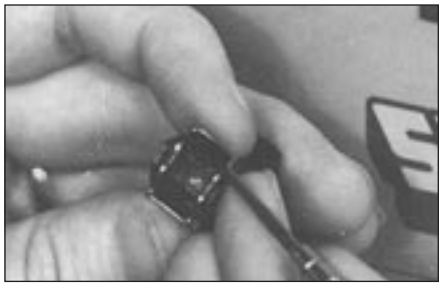

For color filters, use fingernails or small screwdriver to remove. Gently lift (don’t pry) up under edge of filter until it “pops” out.

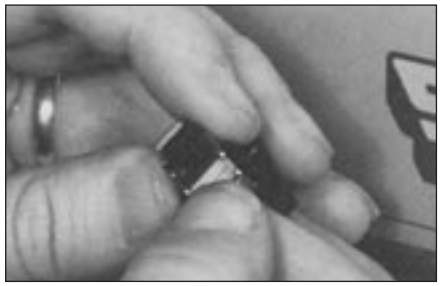

Place new filter in position and press until it “snaps” in. Replace lever assembly and escutcheon. (see “MOUNTING” above)

DIMENSIONS ARE FOR REFERENCE ONLY Inch (mm)

* Please visit the product pages on our website for the most up-to-date product information

# LEVER SWITCHES (continued)

## LEVER-LITE® III SERIES 84000 - ILLUMINATED LEVER SWITCHES

### SPECIFYING LEVER-LITE® III SWITCHES

1. Basic Switch - Refer to Part Number table for ordering switches. For special switches, such as talk-listen (intercom) function, special circuit forms, or non-illuminated switches, contact factory for price and delivery.
2. Illumination - Supplied with standard color filters installed. Switchcraft will install other combinations at nominal extra cost.
3. Lamps - Lamps are not supplied with switches.

### SPECIFICATIONS

**Mounting/Retaining Clips and Covers:** Steel, plated.
**Contact Ratings:** Welded cross bar palladium contacts rated at 1A, 200W maximum AC non-inductive load are standard. Other contacts available. See "SPECIAL ORDER FEATURES" on page 295.
**Springs:** Copper alloy, plated.
**Lamp Terminals:** Copper alloy, plated.
**Lamp Socket:** Zinc, plated.
**Terminals:** Copper alloy, plated, straight solder lugs.
**Housing, Escutcheon, Knob, Actuator and Switching Stacks Insulation:** Molded plastic.
**Temperature Range:** -22°F to 158°F (-30°C to +70°C).
**Dielectric Strength:** 1 kV DC.
**Leakage Resistance:** 1,000 MΩ or greater.

### K-131 COLOR FILTER KIT

Kit is available for changing or replacing color filters to meet illumination requirements. Each kit contains 3 filters of each color: Amber, Blue, Green, Red, White and Yellow.

### SWITCHCRAFT PART NUMBER K-131

### REPLACEMENT LEVERS

**Number G6083** (for locking lever)
**Number G6084** (for non-locking lever)

## PART NUMBERS

### TWO POSITION

| Part Numbers | | Switching |
|---|---|---|
| Non-Locking | Locking | |
| ◊84206 | 84206L | 2-C |
| ◊84212 | ◊84212L | 4-C |

### THREE POSITION

| Part Numbers | | Position 1 | Position 2 |
|---|---|---|---|
| ◊84306 | 84306L | 1-C | 1-C |
| ◊84312 | 84312L | 2-C | 2-C |
| ◊84324 | 84324L | 4-C | 4-C |

◊ Special order only; contact Switchcraft.

LEVER-LITE® SERIES 84000

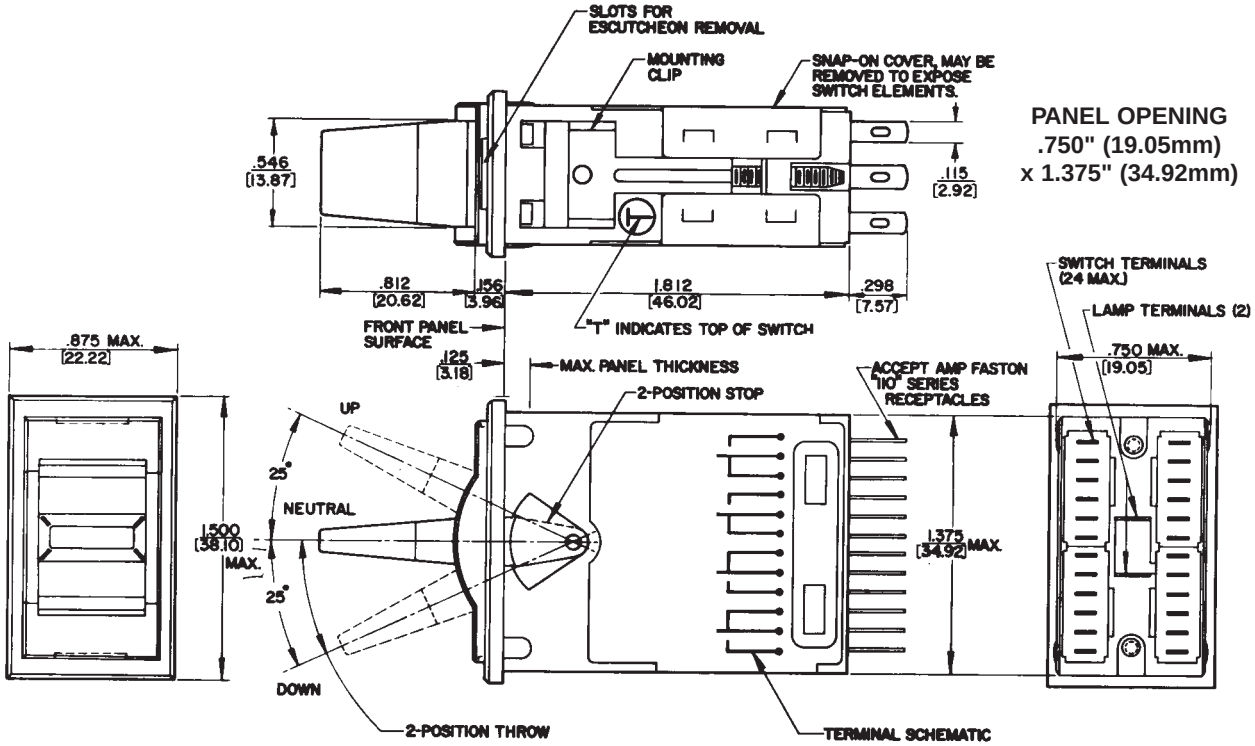


DIMENSIONS ARE FOR REFERENCE ONLY Inch (mm)


® Registered trademark of Switchcraft, Inc.
Note: Contact your Switchcraft Representative for price and delivery

* Please visit the product pages on our website for the most up-to-date product information

# LEVER SWITCHES (CONTINUED)

12010

12011

12012

12013

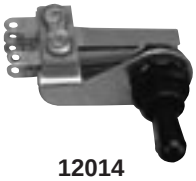
12014

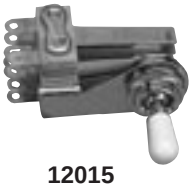
12015

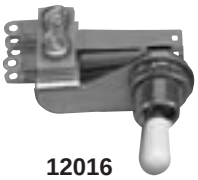
12016

12017

## LEV-R® SWITCH SERIES 12000

### Electrical

**Contact Ratings:** Fine silver contacts rated at 3A, 300W maximum AC non-inductive load standard. Other contacts available

**Leakage Resistance:** 1,000 MΩ or greater

**Dielectric Strength:** 250 VDC

### Material

**Frame:** Copper alloy, plated (3,000, 13,000); Steel, plated (12,000)

**Bushing and Shaft:** Copper alloy, plated

**Springs:** Copper alloy

**Knob:** Black molded thermoplastic

**Mounting Hardware:** Knurled copper alloy locknut T10711, supplied. P10531 hex locknut, special order

**Insulation:** Rigid plastic spacers with plastic tubing through stack. Rigid plastic and/or thermoplastic lifters. Thermoplastic cam on actuator end

## 12000 SERIES RA LEV-R SWITCHES

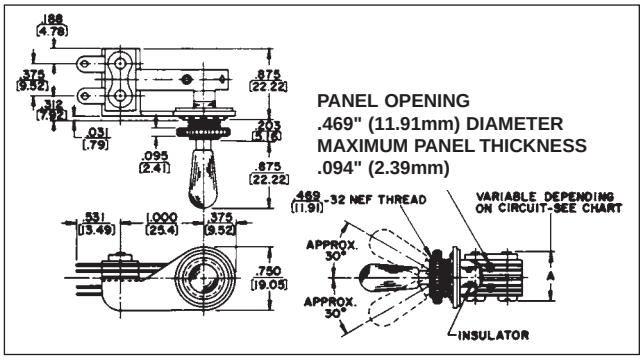


## 12000 SERIES STRAIGHT LEV-R SWITCHES

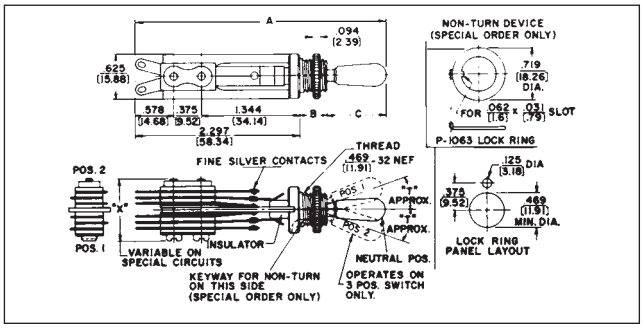


## PART NUMBERS

TWO POSITION NON-LOCKING*+ THREE POSITION NON-LOCKING*

| Part Number | Stack Hgt. "X" & "Y" (max.) | Switching | Part Number | Stack Hgt. "X" & "Y" (max.) | Switching Pos.1 | Switching Pos. 2 |
|---|---|---|---|---|---|---|
| ◊12001 | .719 (18.26) | 1-A | ◊12010 | .703 (17.86) | 1-B | 1-B |
| ◊12002 | .688 (17.48) | 1-B | ◊12011 | .703 (17.86) | 1-B | 1-B |
| ◊12003 | .750 (19.05) | 1-C | ◊12012 | .766 (19.46) | 1-B | 1-B |
| ◊12003D | .813 (20.65) | 1-D | ◊12013 | .703 (17.86) | 1-B | 1-C |
| ◊12004 | .906 (23.01) | 2-A | ◊12014 | .703 (17.86) | 1-B | 1-B |
| ◊12005 | .875 (22.22) | 2-B | ◊12015 | 1.078 (27.49) | 2-B | 2-B |
| ◊12006 | 1.000 (25.40) | 2-C | ◊12016 | .703 (17.86) | 1-B | 1-B |
| ◊12006D | 1.063 (27.00) | 2-D | ◊12017 | .703 (17.86) | 1-B | 1-B |
| | | | ◊12033 | .719 (18.26) | 1-K | |
| | | | ◊12034 | .813 (20.65) | 1-A | 1-A |
| | | | ◊12035 | .750 (19.05) | 1-B | 1-B |
| | | | ◊12036 | .875 (22.22) | 1-C | 1-C |
| | | | ◊12036D | 1.000 (25.40) | 1-D | 1-D |
| | | | ◊12037 | .875 (22.22) | 2-K | |

## INTERCOM SWITCHES

| Part Number | Stack Height "X" &"Y" | Switching |
|---|---|---|
| ◊12033T | .719 (18.26) | 1-K |
| ◊12037T | .875 (22.22) | 2-K |

* Add prefix "R" to part number if non-turn mounting is required. (Special order).
+ Add suffix "L" to part number if locking type is required.
◊ Special order only; contact Switchcraft.

| Knobs | | | |
|---|---|---|---|
| T12742 | Black | T127410 | Ivory |
| T12745 | White | P2912 | Amber |

**Knobs must be ordered separately.**

DIMENSIONS ARE FOR REFERENCE ONLY Inch (mm)

* Please visit the product pages on our website for the most up-to-date product information

## LEVER SWITCHES (CONTINUED)

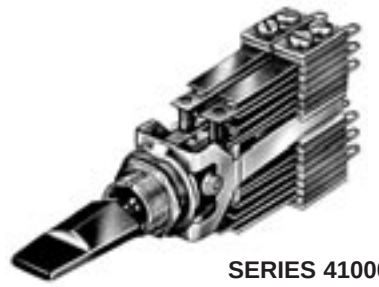

SERIES 41000

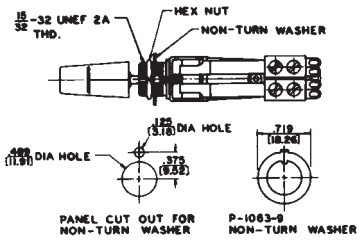


LT® SWITCH SERIES 41000

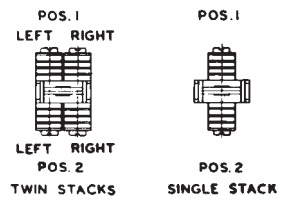


PANEL OPENING
.469" (11.91mm) DIAMETER
MAXIMUM PANEL THICKNESS
.25" (6.35mm)

LT® SWITCH
SERIES 41000

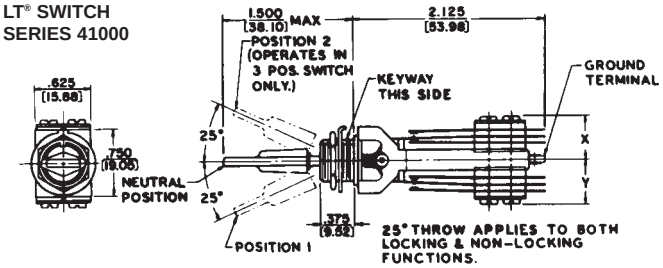


MOLDED DUST COVER

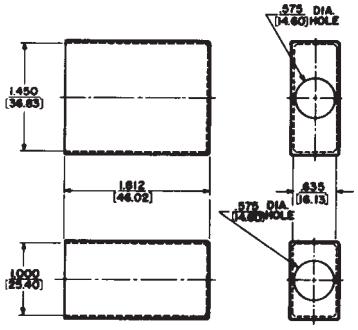


P2362
(up to 4-C per side)

P2360
(up to 2-C per side)

### LT® SWITCH SPECIFICATIONS

**Frame:** Steel, plated.
**Bushing and Actuator:** Copper alloy, plated.
**Springs:** Copper alloy.
**Contact Ratings:** Welded cross bar palladium contacts rated at 2A, 200W maximum, AC non-inductive load are standard. See "SPECIAL ORDER FEATURES".
**Terminals:** Tin dipped solder lugs.
**Mounting Hardware:** Supplied with one copper alloy-plated hex locknut (P10531); and one non-turn washer (P10639).
**Insulation:** Rigid plastic spacers with plastic tubing through
the stack assembly. Lifters of thermoplastic.
**Lifter-Roller Assembly:** Molded plastic.
**Knob:** Supplied with a paddle style, screw-on black plastic knob. See "SPECIAL ORDER FEATURES".
**Temperature Range:** -22°F to 158°F (-30°C to +70°C).
**Leakage Resistance:** 1,000 MΩ or greater.

### MOLDED DUST COVERS

Dust cover is an environment and electrical shield, protecting and improving appearance and increasing switch dependability. Covers enshroud complete switch, preventing build-up of dust, dirt, contamination.

### SPECIAL ORDER FEATURES

1. Talk-Listen (Intercom) function.
2. Fine silver and other alloys available for contacts. See page 294.
3. UL recognized switches. See page 294.

### LT® SWITCH PART NUMBERS

**2 POSITION NON-LOCKING***

| Part Numbers | Switching | Stack Heights Dimension "X" max. |
|---|---|---|
| ◊41203 | 1-C | .531 (13.49) |
| 41206 | 2-C | .531 (13.49) |
| ◊41208 | 4-A | .615 (15.62) |
| 41212 | 4-C | .750 (19.05) |

**3 POSITION NON-LOCKING***

| | Position 1 | Position 2 | Dim. "Y" | Dim. "X" |
|---|---|---|---|---|
| ◊41306 | 1-C | 1-C | .531 (13.49) | .531 (13.49) |
| ◊41308 | 2-A | 2-A | .500 (12.7) | .500 (12.7) |
| 41312 | 2-C | 2-C | .531 (13.49) | .531 (13.49) |
| 41324 | 4-C | 4-C | .750 (19.05) | .750 (19.05) |

*Add suffix "L" to part number for locking type.
To avoid ordering special switches, order a larger standard circuit, providing the circuit meets your requirements.
◊ Special order only; contact Switchcraft.

DIMENSIONS ARE FOR REFERENCE ONLY Inch (mm)


® Registered trademark of Switchcraft, Inc.
Note: Contact your Switchcraft Representative for price and delivery

* Please visit the product pages on our website for the most up-to-date product information

# GENERAL PURPOSE STACK SWITCHES

## GENERAL PURPOSE STACK SWITCHES
**(SPECIAL ORDER ONLY)**

Complete general purpose stack switch assemblies are made from a pile-up of various actuator springs, contact springs and lifters. These stack switch assemblies can be used on manually operated control devices where switching is operated by cams, push-buttons and other similar mechanical devices. The stack switch assembly is made up of an actuator spring and various contact springs. These current carrying members are insulated from each other by phenolic spacers with plastic tubing press fitted through the stack; thereby insuring correct alignment of contacts and providing high insulation resistance when mounted.

The types of General Purpose Stack Switch Components available are:
- .375" (9.52 mm) mounting centers
- .250" (6.35 mm) mounting centers
- "Tini-Stack" Switches .188" (4.78 mm) mounting centers
- Telephone Relay Type Switches .250" (6.25 mm) mounting centers

## STACK SWITCH COMPONENTS
Switchcraft offers various stack switch components, such as contact springs, spacers, lifters, etc., in many lengths, thicknesses, mounting centers and other details.
Switchcraft can assemble components into innumerable different stack switch assemblies. It is impossible to catalog every type of stack that has been manufactured. Stack switch assemblies can be designed to meet UL requirements, but only as part of equipment.

## .375" STACK SWITCHES

Thousands of switching combinations are possible. Switch mounting centers are .375" (9.52 mm) (minimum) with .25" (6.35 mm) wide switch parts. Practical spring length is 2.625" (66.68 mm) (maximum). Contact Switchcraft for selection of contacts and ratings.

## .250" (6.35 MM) STACK SWITCHES

Thousands of switching combinations are possible with slightly smaller parts. Mounting centers are .250" (6.35 mm) (minimum) with .188" (4.78 mm) wide parts. Practical spring length is 2.125" (53.98 mm) (maximum). Contact Switchcraft for selection of contacts and ratings.

## MINIATURE .188" (4.78MM) STACK SWITCHES

Many Tini-Stack® switching combinations are possible. Switch mounting centers are .188" (4.78 mm) (minimum). Practical spring length is 1.750" (44.45 mm) (maximum).

### SPECIFICATIONS
**Springs:** Copper alloy, in most standard gauge thicknesses ranging from .006" (0.15 mm) to .016" (0.41 mm).
**Spacers:** Rigid plastic, available in thickness of .015" (0.38 mm), .032" (0.81 mm) and .046" (1.17 mm).
**Contacts:** Welded cross bar palladium rated at 2A, 200W AC non-inductive load. Gold alloy generally recommended for "dry" circuit applications.
**Tubing:** Thermoplastic.
**Lifters:** Thermoplastic.
**Mounting Hardware:** Pressure plate, twin nut and screws: Steel, plated.

## TELEPHONE RELAY TYPE SWITCHES

Compact stack switches are particularly suitable for low activating force, such as in relay and magnetic operated devices. Contact Switchcraft for selection of contacts and ratings.

### SPECIFICATIONS
**Springs:** Copper alloy, in thicknesses ranging from .006" (0.15 mm) to .012" (0.30 mm).
**Spacers:** Rigid plastic is standard in thickness of .031" (.79 mm), .047" (1.19 mm) and .063" (1.60 mm).
**Contacts:** Fine silver or welded cross bar palladium are standard. Palladium or gold alloy are generally recommended for "dry" circuit applications. Other contacts available for varied customer requirements on special order.
**Tubing:** Thermoplastic.
**Lifters:** Thermoplastic.
**Bracket:** Steel, plated.
**Mounting Hardware:** Pressure plate, twin nut and screws: Steel, plated.

DIMENSIONS ARE FOR REFERENCE ONLY Inch (mm)

* Please visit the product pages on our website for the most up-to-date product information

# GENERAL PURPOSE STACK SWITCHES (continued)

## STACK SWITCH COMPONENT SPECIFICATIONS

**1. SPRINGS -** Copper alloy in most standard gauge thicknesses of .006" (0.15 mm), .008" (0.20 mm), .010" (0.25 mm), .012" (0.30 mm), .016" (0.40 mm) and .020" (0.50 mm), a few designs can be made up to .031" (.079 mm) thick. All or any contact point hole can be provided; spring can be cut at any point.

**2. BRACKETS -** Standard brackets are detailed on drawing. Tools are flexible so that various lengths from same width stock can be provided.

**3. LIFTERS OR PUSHERS -** .125" (3.18 mm) and .188" (4.78 mm) diameter thermoplastic in various lengths staked into one of the contact point holds provides tandem action between blades or to serve as an actuator.

**4. MOUNTING HARDWARE -** Pressure plates (S1293 and S2300) twin nuts (S1008 and S1431) and screws available for mounting.

**5. LEAF INSULATORS -** Punched in same shape as springs in .015" (0.38 mm) thickness of fish paper or mylar.

**6. SPACERS -** Rigid plastic is standard in thicknesses of .015" (0.38 mm), .032" (0.81 mm), .051" (1.30 mm) and .062" (1.57 mm). Thickness of .093" (2.36 mm) is available for .375" (9.52 mm) mounting centers only. For longer surface creepage paths, use both large and standard sized spacers. High temperature insulation also available.

**7. THERMOPLASTIC TUBING -** .375" (9.52 mm) mounting centers pass #5 screw. .250" (6.35 mm) mounting centers pass #3 screw. .188" (4.78 mm) mounting centers pass #2 screw.

**8. CAM FOLLOWERS -** Two roller bracket designs (G1734 and G2298) available for springs .250" (6.35 mm) wide. Copper alloy standard. Can be furnished in various diameters and materials. Thermoplastic rollers also available.

**9. CONTACTS -** Welded cross bar contacts are commonly used for cost savings. However, riveted contacts are available. Size and material depend on circuit requirements (supply complete details). For low level audio circuits, we suggest gold alloy or palladium cross bar contacts. Springs can be bifurcated (two contacts per spring).

## HOW TO ORDER STACK SWITCHES

Careful consideration of the following suggestions will help specify the most economical and expeditious approach to your switching needs. On initial inquiry or order, supply the following information:

1. Simple sketch or drawing. See "Typical Stack Assembly" drawing. Give details checked that are available.
2. Current, voltage and type of switching load (resistive or inductive).
3. Frequency of operation; life requirements.
4. Details of actuator.
5. Maximum and minimum movement of actuator blade.
6. Any other important specifying details.

It is recommended that data indicated above be forwarded to Switchcraft for comments and recommendations before finalizing your design.

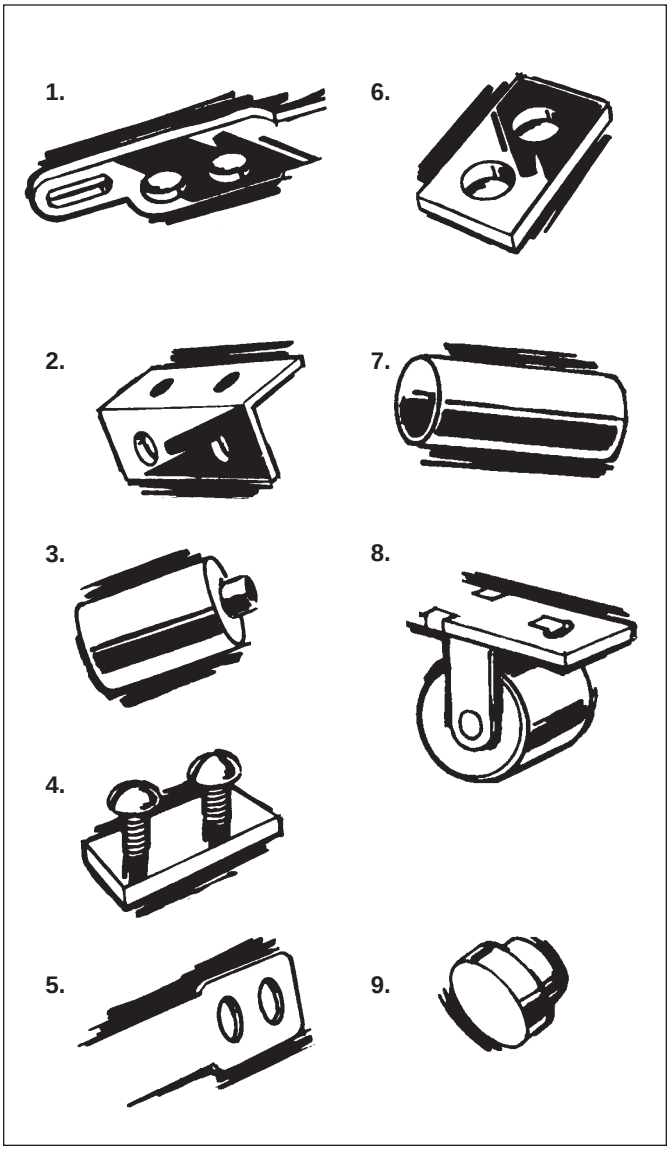


### TYPICAL STACK ASSEMBLY

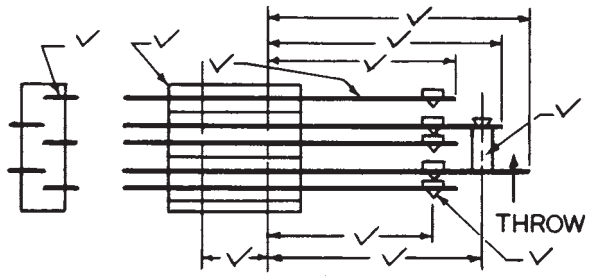


DIMENSIONS ARE FOR REFERENCE ONLY Inch (mm)


® Registered trademark of Switchcraft, Inc.
Note: Contact your Switchcraft Representative for price and delivery

* Please visit the product pages on our website for the most up-to-date product information

# MULTIPLE STATION SWITCHES

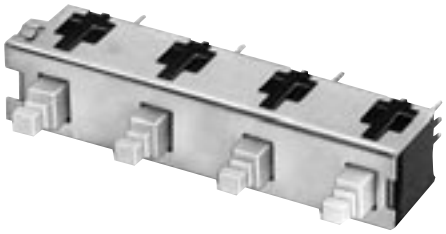

SERIES IBS

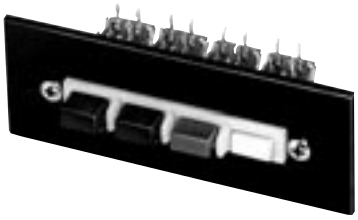

SERIES 65000
DW MULTI-SWITCH

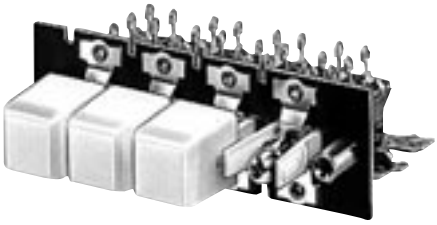

SERIES 66000, 67000
DW MULTI-SWITCH

## FEATURES

Switches are designed to meet performance requirements of sophisticated equipment such as: analog and digital computers, analyzers, transmitters and receivers, intercoms, machine and process controls, ground support systems, scientific instruments and test measurement and instrumentation.

### STANDARD MECHANICAL FUNCTIONS

**INTERLOCK -** actuating a button automatically restores to normal the button previously actuated. Lock-out feature, which prevents the mechanical operation of more than one button at a time, is standard on all interlock switches.

**NON-LOCK -** each button has momentary action. No interaction between buttons. Lock-out available on special order only.

**ALL-LOCK -** all buttons, except release, lock when depressed (accumulative lock). All buttons restored to normal by activating release button which has momentary action.

**PUSH-LOCK/PUSH-RELEASE -** pushbutton locks when depressed and is released when again depressed.

**LOCK-UP -** built-in, electrically operated solenoid locks all stations (in respective positions). Limited to operation of up to 12 stations only and energized from a remote position. Not available in push-lock/push-release.

## SPECIAL ORDER MECHANICAL FUNCTIONS

Mechanical functions on selected series can be intermixed on the same frame on special order only. Contact factory for details and availability.

Multi-Switch switches have been designed to readily accommodate “special” functions at nominal cost. Special functions are described at right.

**Intermixed functions -** the following combinations of standard functions intermixed on the same frame are available:

- Interlock and Non-Lock
- Interlock and Push-Lock/Push-Release
- All-Lock and Non-Lock
- All-Lock and Push-Lock/Push-Release
- Push-Lock/Push-Release and Non-Lock

**Lock-out function -** Refer to above description under “Interlock.”

**Push-release cancelling function -** Speeds programming and reprogramming of equipment.

**Momentary common release function -** Permits one or more momentary common release stations on switch to facilitate special operating and release sequences.

**“Split-interlock” function -** Two separate groups of inter-lock stations on the same frame offers exceptional design latitude and reduces production line time.

## GANGED ASSEMBLIES (Special Order)

Multiple row switching (ganged assemblies) with interaction between rows are available on special order. Space-saving ganged assemblies reduce production line assembly, wiring and testing time. All features of single row switching, including all standard and special features, are available. Contact Switchcraft for specifying assistance.

### PUSHBUTTONS

Illuminated and non-illuminated switches can be specified with standard or special pushbuttons. See coverage on individual series for information.

### LEGENDS

Legends can be supplied on illuminated and non-illuminated pushbuttons. Contact Switchcraft.

DIMENSIONS ARE FOR REFERENCE ONLY Inch (mm)

* Please visit the product pages on our website for the most up-to-date product information

# MULTIPLE-STATION SWITCHES (continued)

**SERIES 90000, 920000**
**TINI DW MULTI-SWITCH**

**SERIES 35000**
**LITTEL® MULTI-SWITCH**

**SERIES 37000, 38000**
**LITTEL® MULTI-SWITCH**

## CHOOSING THE RIGHT MULTIPLE-STATION SWITCH

| Switch Series | Mechanical Functions[1] | Stations (Maximum) | Switching Per Station (Maximum) | Contact Rating[2] | Lighting | Accessories[3] |
|---|---|---|---|---|---|---|
| **35000** | ILO, N, A, PL/PR | 18 | 6PDT | 2A AC, 200W | No | C, G, M, P, S, PC/WW |
| **36000** | ILO, N, A, PL/PR | 18 | 6PDT | 2A AC, 200W | No | C, G, M, P, S, PC/WW, LWO |
| **37000** | | | 4PDT | | Yes | |
| **38000** | | | 3PDT | | Yes | |
| **65000** | ILO, N, A, PL/PR | 18 | 4PDT | 3A AC, 0.5A DC | No | C, G, M, S, PC/WW |
| **66000** | ILO, N, A, PL/PR | 18 | 4PDT | 3A AC, 0.5A DC | No | C, G, M, S, PC/WW |
| **67000** | | | | | Yes | |
| **90000**<br>**92000** | ILO, N, A | 12 - ILO, A<br>18 - N, PL/PR | 8PDT | 0.5A 28V AC or DC | No | M |
| **IBS** | I, N | 12 | 2PDT | .125A, 125 VAC or 28 VDC | No | P, M |

1. I = interlock, ILO = interlock with lockout, N = non-lock (momentary), A = all-lock (special order), PL/PR = push-lock/push-release.
2. Non-inductive load.
3. C = optional switch contact, G = ganged assemblies, M = special/mixed functions, P = optional pushbuttons, S = solenoid release, PC/WW = PC and wire-wrapping terminals, LWO = lighting wiring options.

## ORDERING

Order switches by part number in this section.
For any optional or special order feature, contact Switchcraft.

DIMENSIONS ARE FOR REFERENCE ONLY Inch (mm)



® Registered trademark of Switchcraft, Inc.
Note: Contact your Switchcraft Representative for price and delivery

* Please visit the product pages on our website for the most up-to-date product information

# MULTIPLE-STATION SWITCHES (continued)

## LITTEL® MULTI-SWITCH
### SERIES 35000

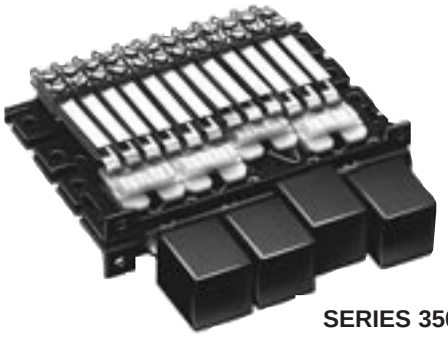

SERIES 35000

Specify 1 to 18 stations (non-illuminated) with a large selection of mechanical functions, choice of pushbuttons, and up to 6 poles of switching per station. Plungers are on .625" (15.88 mm) centers and are made from .050" (1.27 mm) x .187" (4.75 mm) steel. A square black pushbutton, A592, is supplied with each station. A wide variety of special mechanical functions, features and accessories are also available.

## ORDERING INFORMATION
## STANDARD SWITCHES

Order by part number from tables.

## SPECIAL SWITCHES

Many special mechanical functions, features and accessories are available. Contact Switchcraft.

- Ganged Assemblies • Pushbuttons
- Special Mechanical Functions • Legends
- Switch Stacks • Accessories
- PC and Wire-Wrapping Terminals

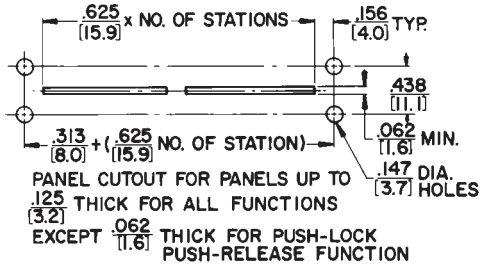


**FIGURE A - PANEL CUTOUT FOR PLUNGER CLEARANCE ONLY**

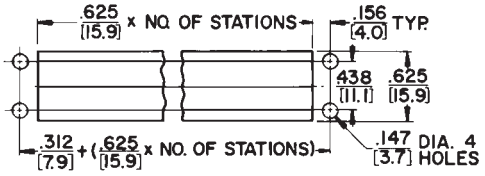


**FIGURE B - PANEL CUTOUT FOR SERIES A590 PUSHBUTTON CLEARANCE ONLY**

## TYPICAL PANELS DIMENSIONS
### SERIES 35000

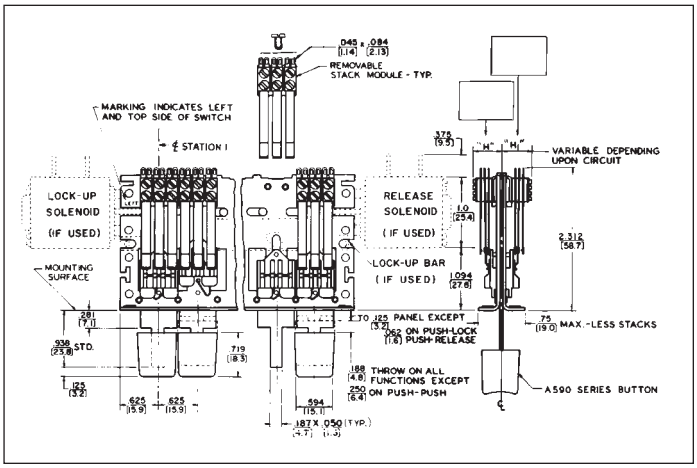


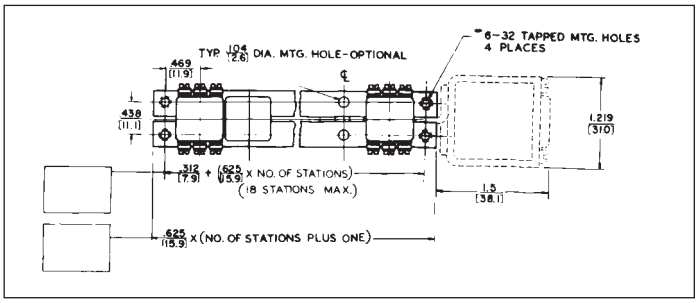


## PART NUMBERS/2-C PER STATION[1]

| Interlock with Lock-Out | Non-Lock | Push-Lock/ Push-Release | Number of Stations[2] |
|---|---|---|---|
| 35021K206 | ◊35022206 | ◊35027206 | 2 |
| 35041K206 | ◊35042206 | ◊35047206 | 4 |
| 35061K206 | ◊35062206 | ◊35067206 | 6 |
| 35081K206 | ◊35082206 | ◊35087206 | 8 |
| 35101K206 | ◊35102206 | ◊35107206 | 10 |
| 35121K206 | ◊35122206 | ◊35127206 | 12 |

## PART NUMBERS/4-C PER STATION[1]

| | | | |
|---|---|---|---|
| ◊35021K212 | ◊35022212 | ◊35027212 | 2 |
| ◊35041K212 | ◊35042212 | ◊35047212 | 4 |
| ◊35061K212 | ◊35062212 | ◊35067212 | 6 |
| ◊35081K212 | ◊35082212 | ◊35087212 | 8 |
| ◊35101K212 | ◊35102212 | ◊35107212 | 10 |
| ◊35121K212 | ◊35122212 | ◊35127212 | 12 |

1. Switches with all-lock function are available on special order. Contact Switchcraft.
2. Odd number of stations (3, 5, 7, 9, 11) are available. Switches with 13 through 18 stations are also available. Contact Switchcraft.

◊ Special order only; Contact Switchcraft for price and delivery information.

DIMENSIONS ARE FOR REFERENCE ONLY Inch (mm)

* Please visit the product pages on our website for the most up-to-date product information

# MULTIPLE-STATION SWITCHES (continued)

## LITTEL® MULTI-SWITCHES
**SERIES 36000, 37000, 38000**

SERIES 36000 - NON-ILLUMINATED

SERIES 37000 - SINGLE LAMP

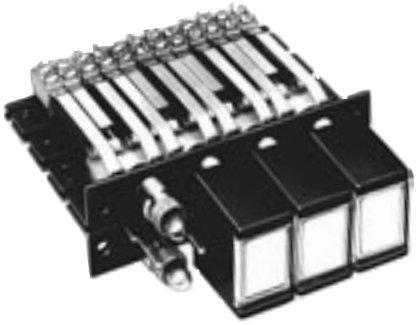

SERIES 38000 - TWIN LAMPS

### SERIES 36000
Identical to Series 37000, except non-illuminated. Pushbuttons match Series 37000 and 38000 Switching up to 6PDT.

### SERIES 37000
Same as Series 35000, but features large, rectangular face pushbuttons, illuminated by one lamp and having large legend area. Switching is up to 4PDT. Switch stations are on .625" (15.88 mm) centers, and depth behind panel is 2.313" (58.75 mm). Black pushbutton housings have white translucent inserts, white legend insert, two support inserts, and transparent display screen. Other pushbuttons and combinations are possible; see pages 316 and 317.

On 2-C per station switches, each station includes two, 83P switch stacks and one H83P lighting stack, and one convenience lighting spring. Contact ratings: 2A, 200W maximum AC non-inductive load.

On 4-C per station switches, each station has 4, 83P switch stacks, one H83P lighting stack, and one convenience lighting spring. “L” and “M” lighting arrangements can be effected by wiring directly to the H83P and H lighting stacks.

Each switch station uses an industry standard T 1-3/4 lamp (not supplied). Special features such as ganged assemblies, solenoid release, and T-1 lamp adapter are available; contact Switchcraft. See pages 316 and 317 for special effects display screen and inserts.

### SERIES 38000
Similar to Series 37000, except features twin lamp illumination at each station for redundant or 2-color, split-face (alternate) lighting.

On 2-C per station switches, each station includes 3, H83P lighting switch stacks and 1 lighting spring. This provides up to 3PDT circuitry (1 pole is needed for lighting lamps; lamps not supplied). Contact ratings: 2A, 200W maximum AC non-inductive load.

On 4-C per station switches, each station has three, H83P, two, 83P switching stacks and one lighting spring. This offers 5PDT circuitry (1 pole is required for lighting lamps). two, T 1-3/4 lamps per station are used (lamps are not supplied). Ganged assemblies and solenoid releases are available; contact Switchcraft. See pages 316 and 317 for special effects display screens and inserts.

### LIGHTING
Series 37000 and 38000 can be used in control systems where the light is either “ON”, or “OFF” or permanently “ON”.

One or any combination of the three lighting arrangements listed below can be specified on a switch. NOTE: Standard switches ordered from tables can be wired for “L”, “M” or “N” type lighting.

| TYPE | DESCRIPTION |
|---|---|
| “L” | Pushbuttons light in the “IN” position. |
| “M” | Pushbuttons light in the “OUT” position. |
| “N” | Pushbuttons light in the “IN” and “OUT” positions. |

### ORDERING
### STANDARD SWITCHES
Order by part number from tables.

### SPECIAL SWITCHES
Many special mechanical functions, features and accessories are available. Contact Switchcraft for special order items.
- Ganged Assemblies • Special Mechanical Functions
- Special Color Displays • Pushbuttons
- Legends • Switch Stacks
- Wiring Lighting Options • PC and Wire-wrapping Terminals
- Accessories

DIMENSIONS ARE FOR REFERENCE ONLY Inch (mm)


® Registered trademark of Switchcraft, Inc.
Note: Contact your Switchcraft Representative for price and delivery

* Please visit the product pages on our website for the most up-to-date product information

# MULTIPLE-STATION SWITCHES (continued)

## LITTEL® MULTI-SWITCHES
**SERIES 36000, 37000, 38000 (continued)**

### SERIES 37000

**PART NUMBERS / 2-C PER STATION[1]**

| Interlock with Lock-Out | Non-Lock | Push-Lock/ Push-Release | Number of Stations[2] |
|---|---|---|---|
| ◊37021K1206 | ◊370221206 | ◊370271206 | 2 |
| ◊37041K1206 | ◊370421206 | ◊370471206 | 4 |
| ◊37061K1206 | ◊370621206 | ◊370671206 | 6 |
| ◊37081K1206 | ◊370821206 | ◊370871206 | 8 |
| ◊37101K1206 | ◊371021206 | ◊371071206 | 10 |
| ◊37121K1206 | ◊371221206 | ◊371271206 | 12 |

**PART NUMBERS / 4-C PER STATION[1]**

| | | | |
|---|---|---|---|
| ◊37021K1212 | ◊370221212 | ◊370271212 | 2 |
| ◊37041K1212 | ◊370421212 | ◊370471212 | 4 |
| ◊37061K1212 | ◊370621212 | ◊370671212 | 6 |
| ◊37081K1212 | ◊370821212 | ◊370871212 | 8 |
| ◊37101K1212 | ◊371021212 | ◊371071212 | 10 |
| ◊37121K1212 | ◊371221212 | ◊371271212 | 12 |

1. Switches with all-lock function are available on special order. Contact Switchcraft.
2. Odd number of stations (3, 5, 7, 9, 11) are available. Switches with 13 through 18 stations also available. Contact Switchcraft.

◊ Special order only; Contact Switchcraft for price and delivery information.

### SERIES 38000

**PART NUMBERS / 2-C PER STATION[1]**

| Interlock with Lock-Out | Non-Lock | Push-Lock/ Push-Release | Number of Stations[2] |
|---|---|---|---|
| ◊38021K1206 | ◊380221206 | ◊380271206 | 2 |
| ◊38041K1206 | ◊380421206 | ◊380471206 | 4 |
| ◊38061K1206 | ◊380621206 | ◊380671206 | 6 |
| ◊38081K1206 | ◊380821206 | ◊380871206 | 8 |
| ◊38101K1206 | ◊381021206 | ◊381071206 | 10 |
| ◊38121K1206 | ◊381221206 | ◊381271206 | 12 |

**PART NUMBERS / 4-C PER STATION[1]**

| | | | |
|---|---|---|---|
| ◊38021K1212 | ◊380221212 | ◊380271212 | 2 |
| ◊38041K1212 | ◊380421212 | ◊380471212 | 4 |
| ◊38061K1212 | ◊380621212 | ◊380671212 | 6 |
| ◊38081K1212 | ◊380821212 | ◊380871212 | 8 |
| ◊38101K1212 | ◊381021212 | ◊381071212 | 10 |
| ◊38121K1212 | ◊381221212 | ◊381271212 | 12 |

1. Switches with all-lock function are available on special order. Contact Switchcraft.
2. Odd number of stations (3, 5, 7, 9, 11) are available. Switches with 13 through 18 stations also available. Contact Switchcraft.

◊ Special order only; Contact Switchcraft for price and delivery information.

### TYPICAL PANEL OPENING

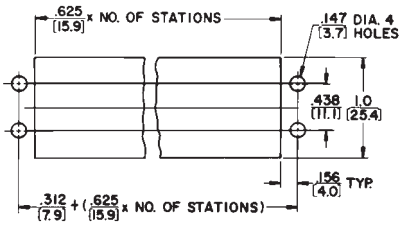


### MATERIAL SPECIFICATIONS

**Frame:** Steel, dry film lubricant.
**Plungers, Stack Switch Mounting Brackets and Screws:** Steel, plated.
**Stack Switches:** Stack switch springs are made of copper alloy. Solder lugs are hot tin-dipped.
**Insulation:** Stack switches: rigid plastic spacers with plastic tubing through stack.
**Lifters:** Thermoplastic.

### SERIES 37000, 38000

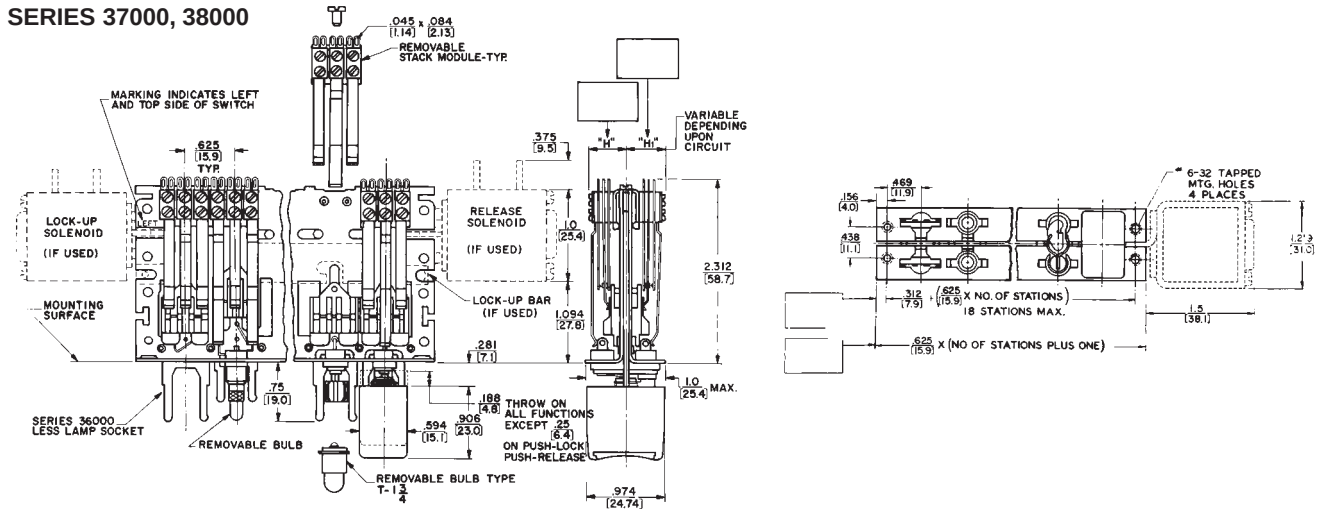


DIMENSIONS ARE FOR REFERENCE ONLY Inch (mm)

* Please visit the product pages on our website for the most up-to-date product information

# MULTIPLE-STATION SWITCHES (continued)

## SPECIAL EFFECTS COLOR DISPLAY SCREENS AND INSERTS

Display screens and inserts are offered in a wide choice of colors for SERIES 37000 and 38000 Littel Multi-Switch switches. Display screens with high-lights are useful in high ambient lighting; or display screens with soft, uniform, and diffused lighting for use under low ambient lighting conditions. Order display screens, inserts and filters separately. See Part Number Chart below.

**A** **Series 401 Display Screen**

**B** **Series 404**
Legend insert recesses into display screen. Omit when split-face inserts are used.
**Part Number 404 05**
White legend insert has a matte finish on one side suitable for in-the-field marking.

**C** **Part Number 404 12 Retaining Insert**
Clear insert snaps into display screen from rear to retain legend inserts. Omit when split-face inserts are used.

**D** **Series 407 Split-Face Insert**
Use with Series 38000

**E** **Series 402 Color Filter Inserts**
White insert used with blue, white and clear display screens; clear insert used with red, green and yellow. All color filters are omitted where split-face insert is used.

**F** **Part Number 402 12 Heat Shield Insert**
Clear filter insert snaps into push-button housing. Must be used in every pushbutton assembly.

**G** **Part Number 406**
Light Divider Recesses into pushbutton housing. For use with Series 38000.

**H** **Series 405 02 Pushbutton Housing.**

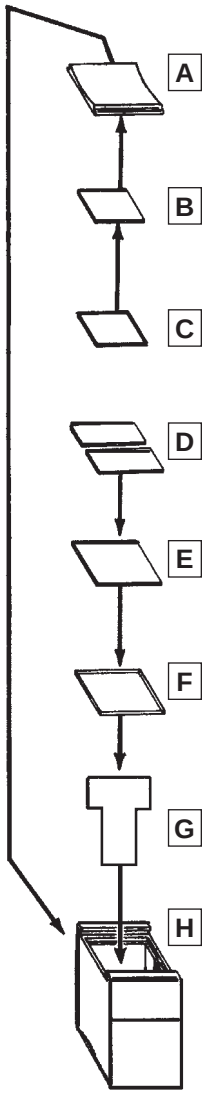


SERIES 401 DISPLAY SCREENS – Display screens with contoured face give a better operation "feel". Rectangular shape provides greater area for engraving legends and symbols. Entire screen is illuminated by single or twin lamp indication. Various brightness and color combinations are possible by use of legend filter and split face inserts.

SERIES 404 LEGEND INSERTS – Small translucent inserts provide special color effects. White colored insert (40405) has a special matte surface for in-the-field identification with ink, pencil or lettering transfers. Special color effects can be accomplished with combination of a colored insert with a clear display screen. IMPORTANT: Order legend insert (40412) with every pushbutton.

SERIES 407 SPLIT-FACE INSERTS – Split-face inserts provide separate control or indicating functions through the use of color. Ideal for use on Series 38000 Littel Multi-Switch switches where each pushbutton can serve as two indicator lights. Up to two lamps can be used per display screen which are split lengthwise by 2-color split-face inserts. Inserts may be hot-stamped. Order (406) light divider when "flip-flop" lighting is specified; or for redundant lighting where a definite visual indication of lamp failure is desired. A frequently used combination is red and green. Red might indicate danger, stop, etc. Green, go, "okay", etc. IMPORTANT: Use (40212) clear insert with a split-face insert.

SERIES 402 FILTER INSERTS – Inserts add greater color definition. Ideal for use under low ambient lighting conditions where brightness of illuminated pushbuttons must be minimized. A white filter insert (40205) is useful in cutting down the brightness of a white color insert and a white or clear display screen. However, it is omitted when color display screen is used. Filters also diffuse light evenly over entire face of display screen with no "hot spots" or darkened corners. IMPORTANT: Order clear insert (40212) for use with every color filter insert. Clear insert snaps in button housing behind a color filter insert and serves as a heat shield.

406 LIGHT DIVIDER – A light divider is used in the standard pushbutton housing to separate the illumination from the twin lamps used in the Series 38000 Littel Multi-Switch switches. Order a light divider for every pushbutton station in the Series 38000 where split-face lighting has been specified.

Series 405 PUSHBUTTON HOUSINGS – One-piece housing for all 37000 and 38000 switches. Accepts Series 401, 402, 404, 406 and 407 components. Standard color is black. Other colors available.

ORDERING – For variations in pushbutton configurations, contact Switchcraft.

| Part No. | Figure | Color |
|---|---|---|
| ◊40101 | A | Red |
| ◊40103 | | Green |
| ◊40104 | | Blue |
| ◊40105 | | White |
| ◊40108 | | Yellow |
| ◊40112 | | Clear |
| ◊40116 | | "Black Screen" |
| ◊40401 | B | Red |

◊ Special order only; Contact Switchcraft for price and delivery information.

| Part No. | Figure | Color |
|---|---|---|
| ◊40403 | B | Green |
| ◊40404 | | Blue |
| ◊40405 | | White |
| ◊40408 | | Yellow |
| ◊40412 | C | Clear (retaining insert) |
| ◊40201 | E | Red |
| ◊40203 | | Green |
| ◊40204 | | Blue |
| ◊40205 | | White |

| Part No. | Figure | Color |
|---|---|---|
| ◊40208 | E | Yellow |
| ◊40212 | F | Clear (heat shield insert) |
| ◊40701 | D | Red |
| ◊40703 | | Green |
| ◊40704 | | Blue |
| ◊40705 | | White |
| ◊40708 | | Yellow |
| ◊406 | G | White (light divider) |
| 40502 | H | Black (housing) |
| 40505 | | White |

DIMENSIONS ARE FOR REFERENCE ONLY Inch (mm)


® Registered trademark of Switchcraft, Inc.
Note: Contact your Switchcraft Representative for price and delivery

* Please visit the product pages on our website for the most up-to-date product information

# MULTIPLE-STATION SWITCHES (continued)

## LITTEL® MULTI-SWITCH ACCESSORIES

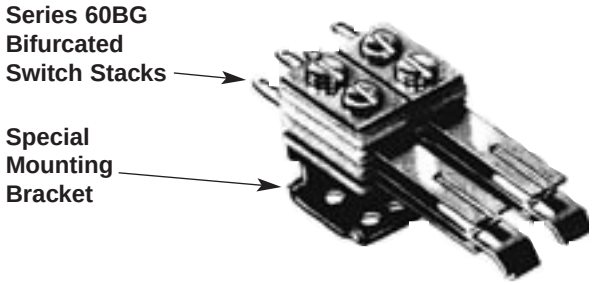


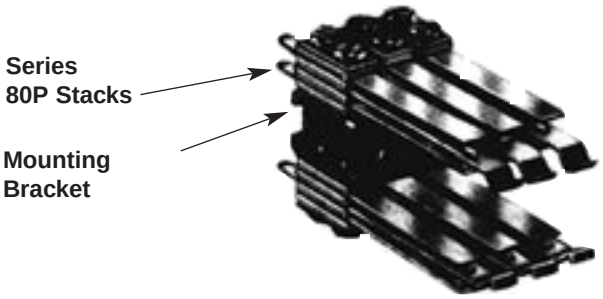


### "TINI-STACK" SWITCHES

Many combinations of stack switches are available on special order. Contact Switchcraft for specifying assistance, including clearances for stack heights.

**SERIES 80P -** Crossbar welded palladium contacts rated: 2A, 200W maximum, AC non-inductive load. For use where contacts of a released station will return to normal before contacts of a newly operated station are actuated. Not recommended for use on push-lock/push/release function.

**SERIES 800P -** Same as Series 80P but can be used on push-lock/push-release function, or on other functions where contacts of a newly operated station must be actuated before contacts of a released station return to normal.

**SERIES 80G -** Same as Series 80P, except includes cross-bar welded gold alloy contacts rated at 1A, 100W maximum, AC non-inductive load.

**SERIES 800G -** Same as Series 80G except for push-lock/push-release and/or other functions as described for Series 800P.

### BIFURCATED "TINI-STACK" SWITCH STACKS

Double reliability through use of bifurcated switch stacks featuring bifurcated leaf springs slotted at the contact end and parallel to the long axis of the leaf spring. Separate crossbar gold alloy contacts are welded to leaf springs on each side, doubling the number of contacts on each spring.

**SERIES 60BG -** Similar to Series 80P, except bifurcated leaf springs with welded crossbar gold alloy contacts rated at 1A, 100W maximum, AC non-inductive load.

**SERIES 600BG -** Same as Series 60BG, except for use on push-lock/push-release function and/or functions as described under Series 800P.

### HIGH CURRENT "TINI-STACK" SWITCH STACKS

Heavy duty switch stacks Series 60W for use in 120V, AC power circuits are available with large, fine silver contacts rated at 5A, non-inductive load. Stack spacer width limits mounting to one stack/station on each side of frame and requires special mounting bracket.
For 10 and 15A switching, contact Switchcraft.

### POSITIONING SWITCH STACKS (SERIES 80P, 800P, 80G AND 800G ONLY)

Refer to chart below for proper balancing of the switch stacks mechanical load at each station, "X" denotes correct positioning of the stack on the removable switch stack bracket.

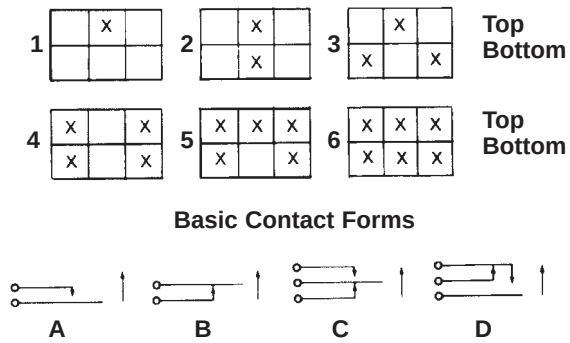


Other contact forms available on special order

### SERIES NJ SOLENOID RELEASE

Solenoid assembly attaches to end of switch frame and provides electrical release of activated stations. Instructions and hardware furnished. Other voltages are available on special order; contact Switchcraft.

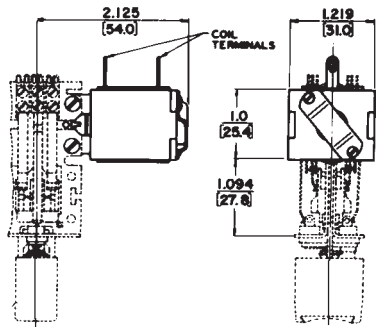


TYPICAL MOUNTING

DIMENSIONS ARE FOR REFERENCE ONLY Inch (mm)

* Please visit the product pages on our website for the most up-to-date product information

# MULTIPLE-STATION SWITCHES (continued)

## LITTEL® MULTI-SWITCH ACCESSORIES

### WIRE-WRAPPING TERMINALS

Special order wire-wrapping terminals optimize use of semi-automated termination equipment to save production line time. Terminal shoulders accommodate 1, 2 or 3 wrapped connections per terminal and prevent wrapping tool from "bottoming" (on first wrapped connection) and possibly shorting against other metal parts on switch stack. 4-C switching per station maximum.

NOTE: Stack height dimension will be greater when wire-wrapping terminals are specified. Stack height for 1-A and 1-B circuit is .516" (13.11 mm). For 1-C height is .594" (15.09 mm).

**ORDERING:** Contact Switchcraft for details.

### RECOMMENDED WIRE-WRAPPING TOOLS

| | (Gardner -Denver Co. Part Numbers) | |
|---|---|---|
| **Wire Gauge** | **Wrapping Bit** | **Sleeve** |
| **#22 & #24** | 500131 | 18840 |
| **#25** | 500131 | 18840 |
| **#26** | 37006 | 17611-2 |

### RECOMMENDED WIRE-WRAPPING PARAMETERS

| Wire Gauge | Number of Connections | Wraps Per Connection | Wire Gauge | Number of Connections | Wraps Per Connection |
|---|---|---|---|---|---|
| #22 | 3 | 4 | #25 | 3 | 4 |
| #24 | 3 | 5 | #26 | 3 | 5 |

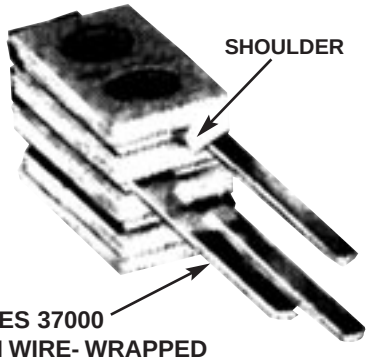


SERIES 37000 WITH WIRE- WRAPPED TERMINALS

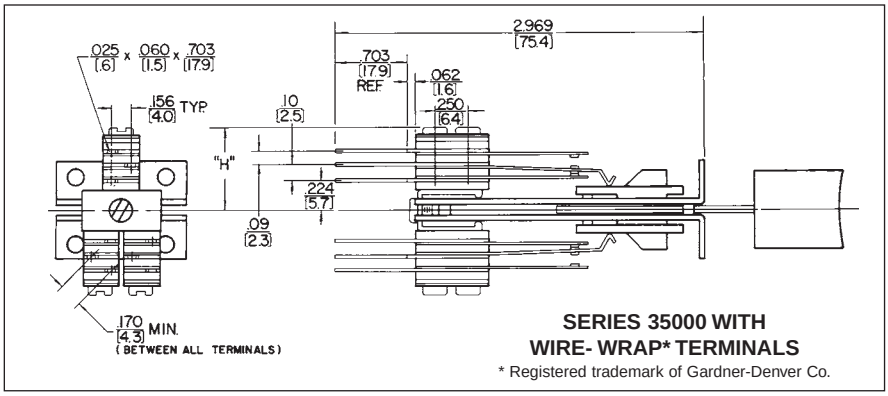


SERIES 35000 WITH WIRE- WRAP* TERMINALS

* Registered trademark of Gardner-Denver Co.

### LAMP SOCKETS AND ADAPTERS

**LAMP SOCKET T10 ◊**

Standard on Series 37000, T10 accepts standard midget flange type T1-3/4 lamps.

**LAMP SOCKET T12 ◊**

Standard on Series 38000, the T12 socket accepts standard midget flange type T1-3/4 lamps.

**LAMP ADAPTER T1**

Converts sockets that accommodate standard T 1-3/4, (P1593) midget flange base lamps to accept T 1 subminiature lamps. Adapter fits T 1-3/4 lamp socket. The 2-piece adapter holds lamp securely in place to assure positive contact of lamp circuit in most environments. If you require extra long-life, specify a T 1 lamp adapter for each T 1-3/4 socket.

**PC TERMINALS**

Copper alloy PC terminals are integral with associated leaf spring and feature shoulders for proper clearance from PC board and for solid mounting. Contact Switchcraft for details.

◊ Available on special order only; Contact factory for price and delivery information.

**LAMP SOCKET T12**

**LAMP ADAPTER T1**

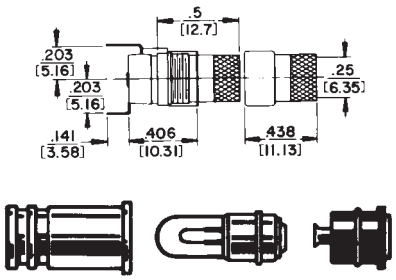


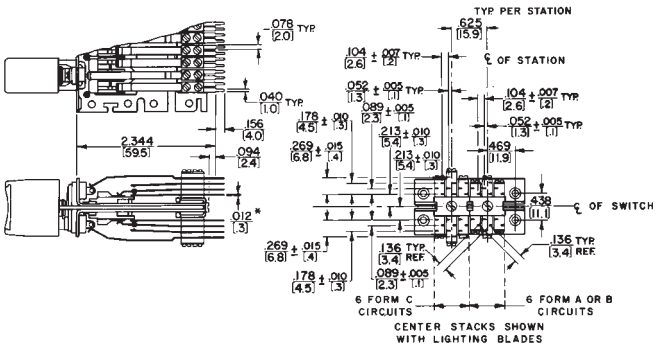


SERIES 37000 WITH PC TERMINALS

DIMENSIONS ARE FOR REFERENCE ONLY Inch (mm)



® Registered trademark of Switchcraft, Inc.
Note: Contact your Switchcraft Representative for price and delivery

* Please visit the product pages on our website for the most up-to-date product information

# MULTIPLE-STATION SWITCHES (continued)

## DW MULTI-SWITCH
### SERIES 65000

Available with up to 18 non-illuminated stations in a single row. Maximum switching per station is 4-C (4PDT). Contacts are rated: 3A, AC, 0.5A DC, 125V, non-inductive load. Integral black button is supplied with each station. Switches mount with #6 screws and nut (not furnished). Contact Switchcraft for special assemblies, with ganged assemblies, solenoid release, PC or wire-wrapping terminals, or escutcheon modules.

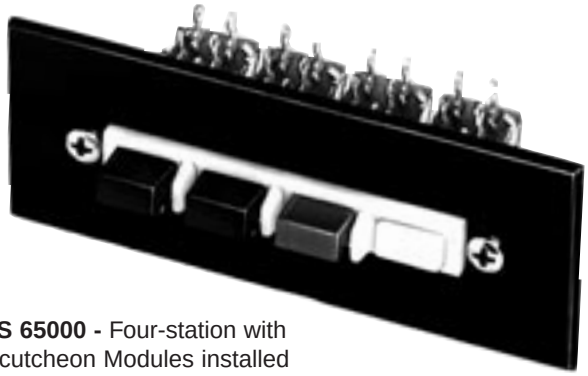

**SERIES 65000 -** Four-station with DW Escutcheon Modules installed

### PART NUMBERS / 2-C PER STATION[1]

| Interlock with Lock-Out | Non-Lock | Push-Lock/ Push-Release | Number of Stations[2] |
|---|---|---|---|
| 65021K206 | ◊65022206 | ◊65027206 | 2 |
| 65041K206 | ◊65042206 | ◊65047206 | 4 |
| 65061K206 | ◊65062206 | ◊65067206 | 6 |
| 65081K206 | ◊65082206 | ◊65087206 | 8 |
| 65101K206 | ◊65102206 | ◊65107206 | 10 |
| 65121K206 | ◊65122206 | ◊65127206 | 12 |

1. Switches with all-lock function are available on special order. Contact Switchcraft.
2. Odd number of stations (3, 5, 7, 9, 11) are available. Switches with 13 through 18 stations also available. Contact Switchcraft.

◊ Special order only; Contact Switchcraft for price and delivery information.

### PART NUMBERS / 4-C PER STATION[1]

| Interlock with Lock-Out | Non-Lock | Push-Lock/ Push-Release | Number of Stations[2] |
|---|---|---|---|
| ◊65021K212 | ◊65022212 | ◊65027212 | 2 |
| ◊65041K212 | ◊65042212 | ◊65047212 | 4 |
| ◊65061K212 | ◊65062212 | ◊65067212 | 6 |
| ◊65081K212 | ◊65082212 | ◊65087212 | 8 |
| ◊65101K212 | ◊65102212 | ◊65107212 | 10 |
| ◊65121K212 | ◊65122212 | ◊65127212 | 12 |

1. Switches with all-lock function are available on special order. Contact Switchcraft.
2. Odd number of stations (3, 5, 7, 9, 11) are available. Switches with 13 through 18 stations also available. Contact Switchcraft.

◊ Special order only; Contact Switchcraft for price and delivery information.

### PANEL CUTOUT DIMENSIONS

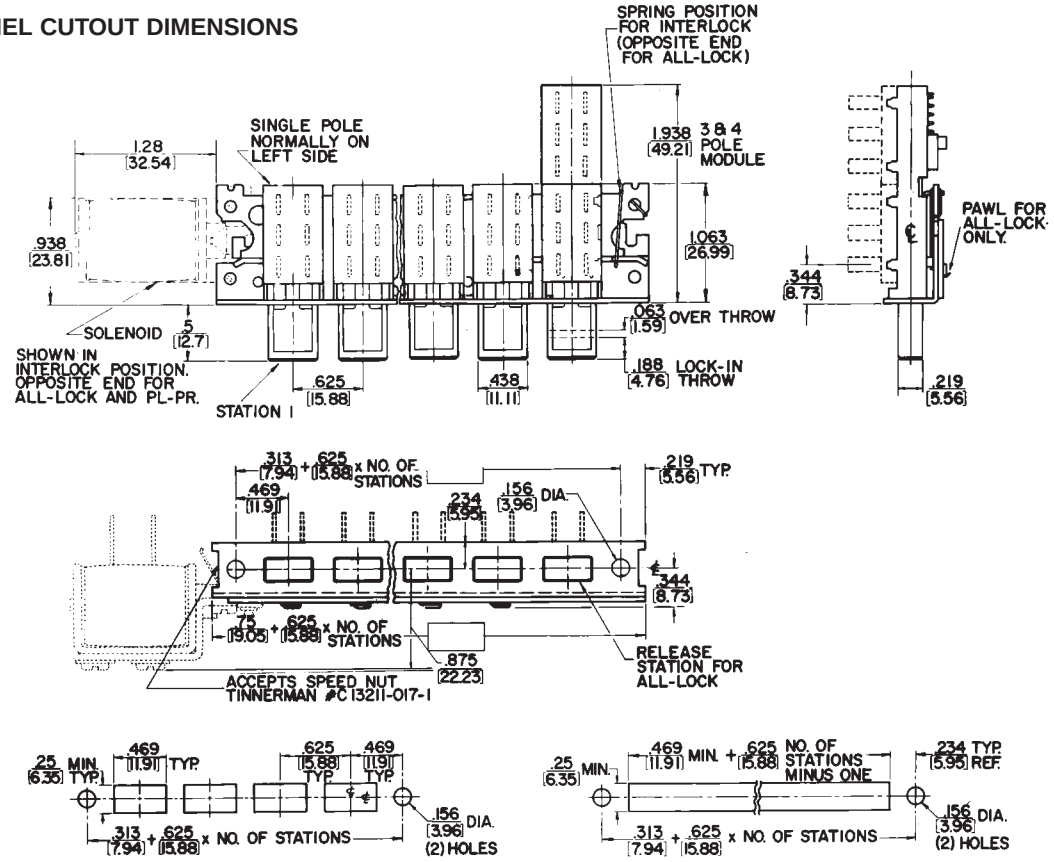


DIMENSIONS ARE FOR REFERENCE ONLY Inch (mm)

* Please visit the product pages on our website for the most up-to-date product information

# MULTIPLE-STATION SWITCHES (continued)

## DW MULTI-SWITCH
**SERIES 66000 and 67000**

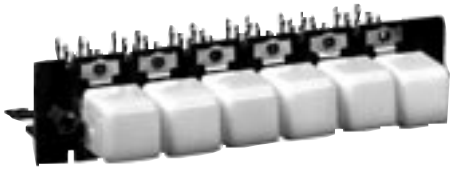

Series 66000 (non-illuminated) and 67000 (illuminated) can be supplied with up to 18 stations, including a square white pushbutton Part Number DW305 at each station. Contacts and ratings are the same as for Series 65000. Lamp sockets (67000) at each station accept 6V to 28V T 1-3/4 flange base lamps (not supplied). Mounts with 2 #6-32 machine screws (not supplied). See page 310 for pushbutton data. Accessories include solenoid release, ganged assemblies, T1 lamp adapter, and metal barriers (between stations). PC and wire-wrapping terminals are also available. Contact Switchcraft.

### NON-ILLUMINATED DW MULTI-SWITCH SWITCHES
Switchcraft offers DW Multi-Switch switches, Series 70000 and 71000 with crossbar plungers which accept a wide variety of Switchcraft and industry pushbuttons. Contact Switchcraft for specifying assistance.

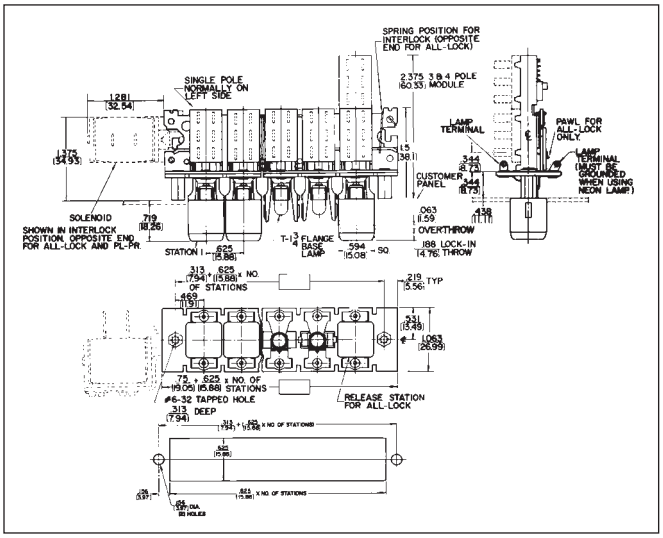


### SERIES DW40 COLOR INSERTS
Many unusual lighting effects can be created using DW40 color inserts. Molded from dimensionally stable, high-temperature plastic in six standard colors, inserts slip into standard Series DW300 pushbuttons providing unusual latitude in custom designing color and legend effects. With no wear from finger-tips, legend life is virtually unlimited.

| Part No. | Color | Part No. | Color | Part No. | Color |
|---|---|---|---|---|---|
| ◊DW41 | Red | ◊DW44 | Blue | ◊DW47 | Orange |
| ◊DW43 | Green | DW45 | White | ◊DW48 | Yellow |

◊ Special order only; Contact Switchcraft for price and delivery information.

### SERIES DW300 PUSHBUTTONS (DW305 supplied standard)

| Part No. | Color[1] | Part No. | Color[1] | Part No. | Color[1] |
|---|---|---|---|---|---|
| DW301 | Red | DW304 | Blue | DW312 | Clear |
| DW302 | Black | DW305 | White | DW313 | Amber |
| DW303 | Green | DW308 | Yellow | DW316 | "Black-Screen" |

1 Other colors available on special order. Buttons are 0.594 (15.09) x 0.594 (15.09)

### PART NUMBERS/2-C PER STATION[1]

| Interlock with Lock-Out | Non-Lock | Push-Lock/ Push-Release | Number of Stations[2] |
|---|---|---|---|
| 67021K506 | ◊67022506 | ◊67027506 | 2 |
| 67041K506 | ◊67042506 | ◊67047506 | 4 |
| 67061K506 | ◊67062506 | ◊67067506 | 6 |
| 67081K506 | ◊67082506 | ◊67087506 | 8 |
| 67101K506 | ◊67102506 | ◊67107506 | 10 |
| 67121K506 | ◊67122506 | ◊67127506 | 12 |

### PART NUMBERS/4-C PER STATION[1]

| | | | |
|---|---|---|---|
| ◊67021K512 | ◊67022512 | ◊67027512 | 2 |
| ◊67041K512 | ◊67042512 | ◊67047512 | 4 |
| ◊67061K512 | ◊67062512 | ◊67067512 | 6 |
| ◊67081K512 | ◊67082512 | ◊67087512 | 8 |
| ◊67101K512 | ◊67102512 | ◊67107512 | 10 |
| ◊67121K512 | ◊67122512 | ◊67127512 | 12 |

1. Switches with all-lock function are available on special order. Contact Switchcraft.
2. Odd number of stations (3, 5, 7, 9, 11) are available. Switches with 13 through 18 stations also available. Contact Switchcraft.

◊ Special order only; Contact Switchcraft for price and delivery information.

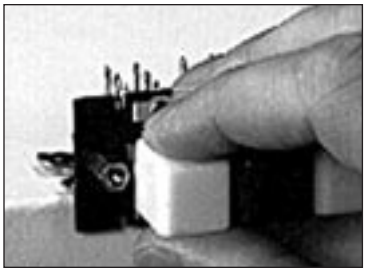

**Squeeze upper and lower surfaces of pushbutton and pull free of plungers.**

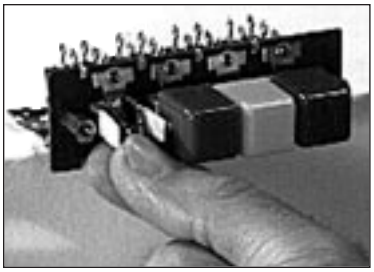

**Next, grasp lamp with lamp removal tool or fingertips and snap-out. Replace lamp and pushbutton. Finished in seconds!**

DIMENSIONS ARE FOR REFERENCE ONLY Inch (mm)


® Registered trademark of Switchcraft, Inc.
Note: Contact your Switchcraft Representative for price and delivery

* Please visit the product pages on our website for the most up-to-date product information

# MULTIPLE-STATION SWITCHES (continued)

## DW MULTI-SWITCH ACCESSORIES

### ESCUTCHEON MODULES, SERIES DW100 AND DW200

Modules are available in colors to match or contrast with Series 65000 pushbutton colors. Modules are simply slipped over the pushbuttons before the switch is mounted on the panel. Flanges on modules overlap the panel cutout and hold modules securely in place while adding only 0.02" (.051 mm) behind panel space.

One module is required for each station. Installation of the Series DW200 Modules (with barrier) is equally simple. First, place one Series DW100 Module over the pushbutton actuator on one end of the row. On the adjacent actuator, place a Series DW200 Module. Position this module so that the barrier overlaps the edge of the Series DW100 Module. Install the remaining Series DW200 modules in the same manner, with the barriers overlapping. The completed escutcheon will have barriers between adjacent pushbutton actuators, but no barriers at the ends of the rows.

| Series DW-100 (without barrier) | Series DW-200 (with barrier) | Color* |
|---|---|---|
| ◊DW101 | ◊DW201 | Red |
| DW102 | DW202 | Black |
| DW05 | DW205 | White |

* Other colors available on special order.
◊ Special order only; Contact Switchcraft for price and delivery information.

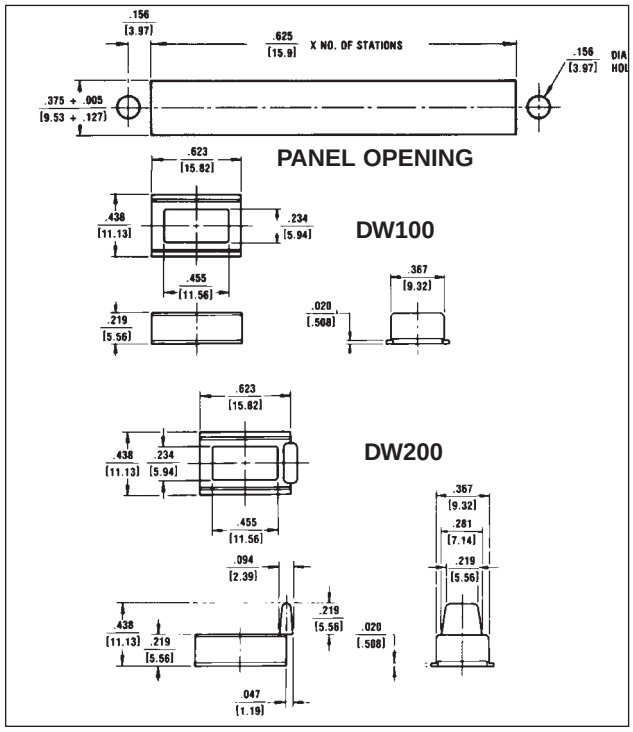

## SPECIAL SWITCHING FORMS

In addition to 2-C and 4-C switching, other circuit forms can be supplied on special order. They are: 1-A, 2-A, 3-A, 4-A, 1-B, 2-B, 3-B, 4-B, 1-C, 3-C, 1-D, 2-D, 3-D, and 4-D.

## BARRIERS (SERIES 67000 ONLY)

As an option, (field installable) barriers can be specified and installed. Sturdy wire barriers fit between pushbuttons and prevent accidental simultaneous actuation of adjacent push-buttons. When a pushbutton is depressed, the fingertip is guided away from adjacent pushbuttons, and all pressure is applied to the correct pushbutton.

**Switchcraft Part Number ◊P2359 Barriers** (package of 25)

## SOLENOID RELEASE

Solenoids provide electromechanical assistance in releasing locked switch stations in switches with up to 12 stations. Release can be effected from a local or remote position. Solenoids are available for use with switches having inter-lock, all-lock, or push-lock/push-release mechanical functions. All solenoids are "pull-type". When ordered separately, solenoids are supplied with all mounting hardware. Brass terminals accept "push-on" type clips (ARK-LES #3500M20C), or wiring can be soldered directly to the lugs.

## SPECIFICATIONS

**Frame, Latch Bar, and Switch Housing:** Steel, plated.
**Mounting Studs (Series 66000 and 67000):**
Same as frame above.
**Pushbutton Actuators (Series 65000):** Molded thermoplastic.
**Pushbuttons (Series 66000 and 67000):**
Molded thermoplastic.
**Terminals:** Copper alloy, silver-plated.
**Contactors:** Copper alloy, plated.
**Terminal Board:** Rigid plastic.
**Lamp Socket (Series 67000):** Copper alloy, plated.

| Part Number | Switch Function | Mounting* | Voltage | Coil Res. (Ohms) | Duty Cycle |
|---|---|---|---|---|---|
| ◊DW1 | Interlock | Left | 115 AC, 60 Hz | 361 | 20% |
| ◊DW3 | All-Lock | Right | 115 AC, 60 Hz | 130 | 10% |
| ◊DW4 | Interlock | Left | 24 DC | 14.2 | 20% |
| ◊DW7 | All-Lock or Push-Lock/Push-Release | Right | 24 DC | 8.96 | 10% |

* Direction indicates side of switch frame solenoid is mounted on (solenoid terminals up).

DIMENSIONS ARE FOR REFERENCE ONLY Inch (mm)

* Please visit the product pages on our website for the most up-to-date product information

# MULTIPLE-STATION SWITCHES (continued)

**SERIES 92000 Switch TDW-F**
**Flip-Flop Pushbutton Installed**

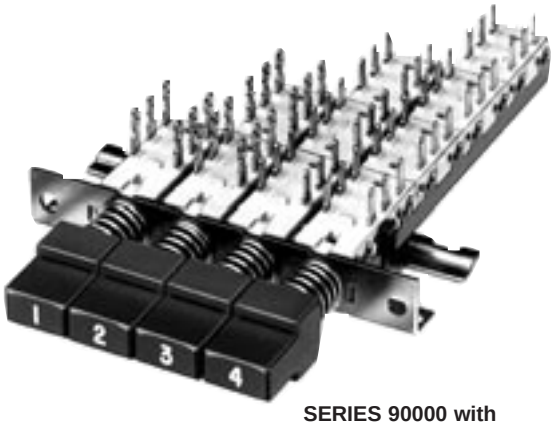


**SERIES 90000 with**
**A-650 Pushbuttons Installed**

## TINI® DW MULTI-SWITCH – SERIES 90000, 92000

Subminiature, multiple station switches have pushbuttons on 0.394" (10mm), 0.590" (15mm), or 0.787" (20mm) centers. Four mechanical functions: Interlock, Non-Lock, All-Lock and Push-Lock/Push-Release. Switches mount in panels up to .343" (8.71mm) thick. Switching per station is 2-C (2PDT), 4-C (4PDT), 6-C (6PDT) or 8-C (8PDT). Contact ratings: 0.5A, 28V AC or DC non-inductive. Solder lug or PC terminals.

**SERIES 90000 -** Up to 18 stations on 0.394" (10mm) centers in a row. Switch mounts with 2, #3 screws (not supplied).

**SERIES 92000 -** 15mm station centers. Wider spacing permits mounting Series TDWF pushbuttons.

## SPECIFICATIONS

### ELECTRICAL

**Switching Module Rating:** 0.5A, 28V AC or DC non-inductive load.
**Initial Contact Resistance:** 10 milliohms.

### MATERIALS

**Frame Switch Housing:** Steel, plated.
**Latch Bar:** Stainless steel on all-lock function; zinc alloy on interlock function.
**Latch Bar Return Spring:** Tinned music wire.
**Plunger:** Molded thermoplastic.
**Plunger Return Spring:** Tinned music wire.
**Terminals/Contacts:** Copper alloy, silver-plated.
**Contact Sliders:** Bifurcated bimetal (silver on copper alloy).
**Terminal Board:** Molded thermoplastic (UL 94V-0).
**Pushbuttons:** Molded thermoplastic.

## PUSHBUTTONS

| Part Number | Color | Part Number | Color |
|---|---|---|---|
| ◊A6501 | Red | ◊A6504 | Blue |
| ◊A6502 | Black | ◊A6505 | White |
| ◊A6503 | Green | ◊A6508 | Yellow |

Buttons are 0.386 (9.80 mm) x 0.386 (9.80 mm).
◊ Special order only; Contact Switchcraft for price and delivery information.

Pushbuttons for Tini DW Multi-Switch switches must be specified separately, below. Refer to page 316 for data on TWDF pushbuttons.

Series A650 pushbuttons can be specified for both Series 90000 and 92000. Legends can be specified; contact Switchcraft.

## PART NUMBERS/2-C PER STATION[1]

| Interlock with Lock-Out | Non-Lock | Push-Lock/ Push-Release | Number of Stations[2] |
|---|---|---|---|
| ◊90024B06 | ◊90022B06 | ◊90027B06 | 2 |
| ◊90044B06 | ◊90042B06 | ◊90047B06 | 4 |
| ◊90064B06 | ◊90062B06 | ◊90067B06 | 6 |
| ◊90084B06 | ◊90082B06 | ◊90087B06 | 8 |
| ◊90104B06 | ◊90102B06 | ◊90117B06 | 10 |
| ◊90124B06 | ◊90122B06 | ◊90127B06 | 12 |

## PART NUMBERS/4-C PER STATION[1]

| | | | |
|---|---|---|---|
| ◊90024B12 | ◊90022B12 | ◊90027B12 | 2 |
| ◊90044B12 | ◊90042B12 | ◊90047B12 | 4 |
| ◊90064B12 | ◊90062B12 | ◊90067B12 | 6 |
| ◊90084B12 | ◊90082B12 | ◊90087B12 | 8 |
| ◊90104B12 | ◊90102B12 | ◊90117B12 | 10 |
| ◊90124B12 | ◊90122B12 | ◊90127B12 | 12 |

1 Switches with all-lock function are available on special order. Contact Switchcraft.
2 Odd number of stations (3, 5, 7, 9, 11) are available. Switches with 13 through 18 stations also available. Contact Switchcraft.
◊ Special order only; Contact Switchcraft for price and delivery information.

## SPECIFYING NOTE:

Series 90000 Part Numbers are given in table. To order Series 92000 switches, substitute “2” for “0” for second digit of Part Number. Example; Part Number 92024B06 in the Series 92000 version 0.590" (15mm centers) of Part Number 90024B06 0.394" (10mm centers) interlock with lock-out, 2-C switching per station.

DIMENSIONS ARE FOR REFERENCE ONLY Inch (mm)


® Registered trademark of Switchcraft, Inc.
Note: Contact your Switchcraft Representative for price and delivery

* Please visit the product pages on our website for the most up-to-date product information

## MULTIPLE-STATION SWITCHES (continued)

### TINI® DW MULTI-SWITCH
**SERIES 90000 and 92000**

**RECOMMENDED PC BOARD LAYOUT (Component Side)**

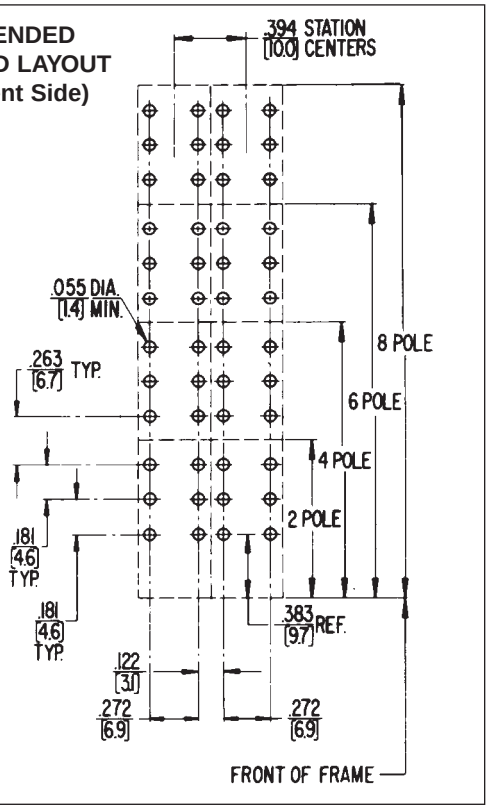


**PANEL OPENING SERIES 90000 WITH SERIES A-650 PUSHBUTTONS**

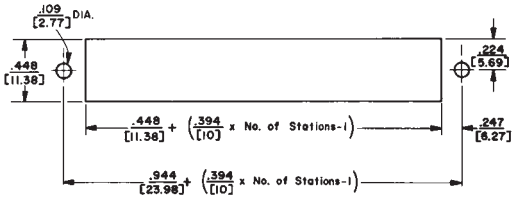


**PANEL OPENING SERIES 92000 WITH SERIES A-650 PUSHBUTTONS**

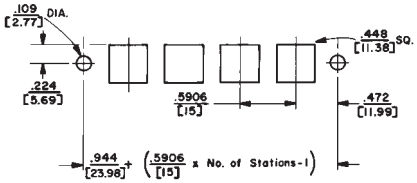


**PANEL OPENING SERIES 92000 WITH TDW-F PUSHBUTTONS**

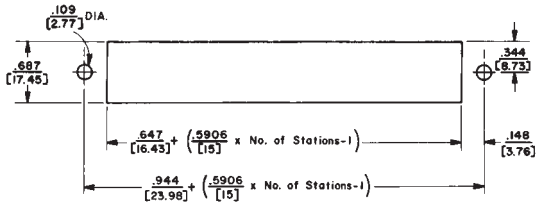


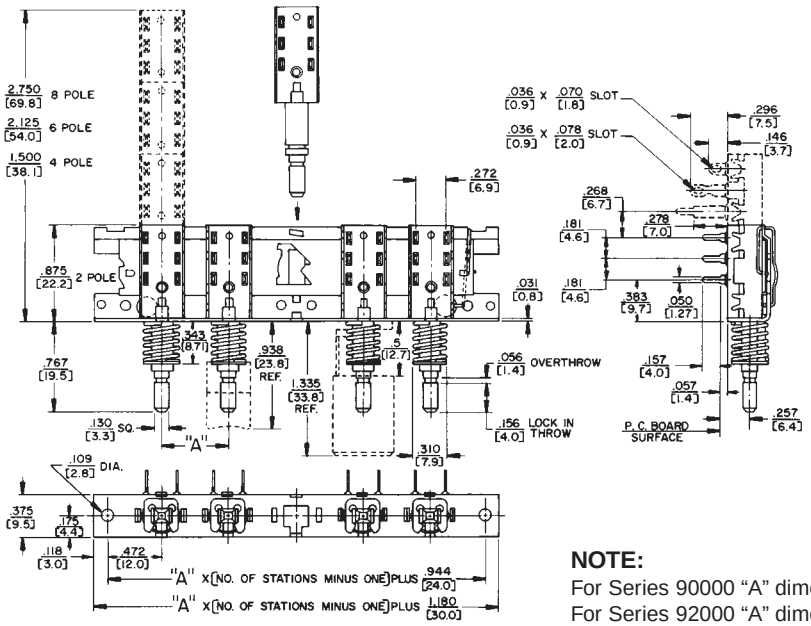


**NOTE:**
For Series 90000 "A" dimension is .394" (10.0mm)
For Series 92000 "A" dimension is .590" (15.0mm)

DIMENSIONS ARE FOR REFERENCE ONLY Inch (mm)

* Please visit the product pages on our website for the most up-to-date product information

# MULTIPLE-STATION SWITCHES (continued)

IBS10B04106AR

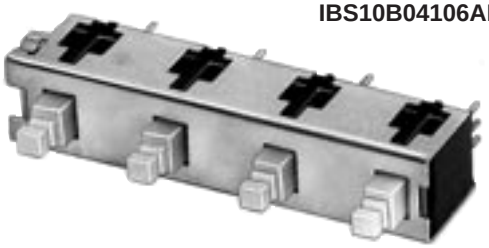

**TYPE I**
0.388 (9.86) x 0.216 (5.49)

**TYPE II**
0.464 (11.79) x 0.288 (7.32)

## IBS MULTI-SWITCH SWITCHES
## SERIES IBS

Series IBS miniature pushbutton switches are mounted on common frames, up to 12 stations long with center-to-center spacing of 0.394" (10mm), 0.590" (15mm) or 0.787" (20mm). Available with interlock, non-lock (momentary) or push-lock/push-release mechanical functions. .130" (3.30mm) x .130" (3.30mm) square plungers accept a full line of industry standard pushbuttons. Switches are stocked without pushbuttons due to wide variety that can be used. Order pushbuttons separately. Switches have .157" (4mm) long PC terminals for mounting single- or double-sided PC boards up to .094" (2.39mm) thick. Close stacking (centers) permits high density within minimum front panel space.

### PUSHBUTTONS

Pushbuttons designed for IBS switches are available in white, black, red, blue and gray. Others colors are available on special order. Pushbutton faces are concave for operator convenience and can be mounted either horizontally or vertically. Pushbuttons must be ordered separately, but may be factory installed, if desired, at nominal extra cost.

## SPECIFICATIONS

### MECHANICAL

**Switch Actuation:** Momentary, interlock and push-lock/push-release.
**Plunger Travel:** .144" (3.66 mm).
**Actuation Force:** At .135" (3.43mm) travel: 12-15 oz.

### ELECTRICAL

0.125A resistive @ 125 V AC, .25 AMP at 28V DC.

### MATERIALS

**Housing:** Thermoplastic 94V-0.
**Plunger:** Thermoplastic UL 94V-0.
**Contactors:** Copper alloy.
**Terminals:** Copper alloy, solder plated. Tin-dipped available on special order.
**Contact Surfaces:** Plated.
**Frame:** Copper alloy.
**Latch Bar:** Thermoplastic.

### PART NUMBERS/0.394" (10MM) CENTERS[1]

| Interlock | Number of Stations[2] |
|---|---|
| ◊IBS10B02106AR | 2 |
| ◊IBS10B04106AR | 4 |
| ◊IBS10B06106AR | 6 |
| ◊IBS10B08106AR | 8 |
| ◊IBS10B10106AR | 10 |
| ◊IBS10B12106AR | 12 |

### PART NUMBERS/0.590" (15MM) CENTERS[1]

| | |
|---|---|
| ◊IBS15B02106AR | 2 |
| ◊IBS15B04106AR | 4 |
| ◊IBS15B06106AR | 6 |
| ◊IBS15B08106AR | 8 |
| ◊IBS15B10106AR | 10 |
| ◊IBS15B12106AR | 12 |

### PART NUMBERS/0.787" (20MM) CENTERS[1]

| | |
|---|---|
| ◊IBS20B02106AR | 2 |
| ◊IBS20B04106AR | 4 |
| ◊IBS20B06106AR | 6 |
| ◊IBS20B08106AR | 8 |
| ◊IBS20B10106AR | 10 |
| ◊IBS20B12106AR | 12 |

1. Switches with all-lock function are available on special order. Contact Switchcraft.
2. Odd number of stations (3, 5, 7, 9, 11) are available. Switches with 13 through 18 stations also available. Contact Switchcraft.

◊ Special order only; Contact Switchcraft for price and delivery information.

### PUSHBUTTON PART NUMBERS

| Type I | Type II | Color |
|---|---|---|
| P2936 | P2951 | White |
| P2937 | P2952 | Black |
| P2938 | P2953 | Red |
| ◊P2939 | ◊P2954 | Yellow |
| ◊P2940 | ◊P2955 | Green |
| P2941 | P2956 | Blue |
| P2942 | P2957 | Gray |
| ◊P2943 | ◊P2958 | Brown |
| - | ◊P2979 | Cream |
| - | ◊P2992 | Tangerine |

◊ Available on special order only; contact Switchcraft for price and delivery.

DIMENSIONS ARE FOR REFERENCE ONLY Inch (mm)


® Registered trademark of Switchcraft, Inc.
Note: Contact your Switchcraft Representative for price and delivery

* Please visit the product pages on our website for the most up-to-date product information

# MULTIPLE-STATION SWITCHES (continued)

## IBS MULTI-SWITCH SWITCHES
## SERIES IBS

### IBS PART NUMBERING CODE

| IBS | XX | X | XX | X | XX[1] | X | R |
|---|---|---|---|---|---|---|---|
| | CENTERS<br>0.394" (10mm)<br>0.590" (15mm)<br>0.787" (20mm) | FRAME STYLE<br>A - Mounting Ears<br>B - No Mounting Ears | STATIONS<br>01 - 12 | MECHANICAL FUNCTION<br>1 - Interlock<br>2 - Non-Lock | CIRCUITS<br>01 - 1A<br>02 - 1B<br>03 - 1C<br>04 - 2A<br>05 - 2B<br>06 - 2C | TERMINAL LENGTH<br>A - 0.157" (4mm) | |

* 8 stations maximum on 0.787" (20mm) centers.
1. See page 269 for individual switch terminal conjunction.

### DIMENSIONS

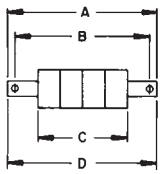


0.394" (10mm)

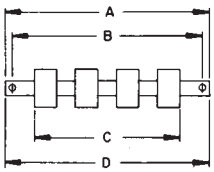


0.590" (15mm)

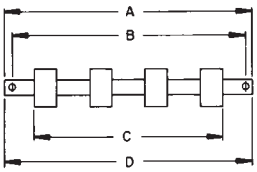


0.787" (20mm)

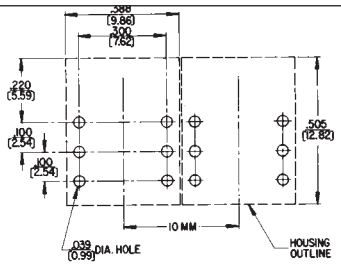


**RECOMMENDED PC BOARD LAYOUT (Component Side)**
(.300 x .100)
(7.62 mm) x (2.54)

### 0.394" (10mm) CENTERS

STATIONS

| | | Dimension | | 2 | 3 | 4 | 5 | 6 | 7 | 8 | 9 | 10 | 11 | 12 |
|---|---|---|---|---|---|---|---|---|---|---|---|---|---|---|
| MTG. EARS | | A | in. | 1.518 | 1.912 | 2.305 | 2.699 | 3.093 | 3.486 | 3.880 | 4.274 | 4.667 | 5.061 | 5.455 |
| | | | (mm) | (38,56) | (48,56) | (58,55) | (68,55) | (78,56) | (88,54) | (98,55) | (108,56) | (118,54) | (128,55) | (138,56) |
| | | B | in. | 1.270 | 1.663 | 2.057 | 2.451 | 2.845 | 3.238 | 3.632 | 4.026 | 4.419 | 4.814 | 5.207 |
| | | | (mm) | (32,26) | (42,24) | (52,25) | (62,26) | (72,26) | (82,25) | (92,25) | (102,26) | (112,24) | (122,28) | (132,26) |
| | NO MTG. EARS | C | in. | .782 | 1.175 | 1.569 | 1.963 | 2.357 | 2.750 | 3.144 | 3.538 | 3.931 | 4.325 | 4.719 |
| | | | (mm) | (19,86) | (29,84) | (39,85) | (49,86) | (59,87) | (69,85) | (79,86) | (89,86) | (99,85) | (109,86) | (119,86) |
| | | D | in. | .876 | 1.269 | 1.663 | 2.057 | 2.451 | 2.844 | 3.238 | 3.632 | 4.025 | 4.419 | 4.813 |
| | | | (mm) | (22,25) | (32,23) | (42,24) | (52,25) | (62,26) | (72,24) | (82,24) | (92,25) | (102,24) | (112,24) | (122,25) |

### 0.590" (15mm) CENTERS

STATIONS

| | | Dimension | | 2 | 3 | 4 | 5 | 6 | 7 | 8 | 9 | 10 | 11 | 12 |
|---|---|---|---|---|---|---|---|---|---|---|---|---|---|---|
| MTG. EARS | | A | in. | 1.715 | 2.305 | 2.896 | 3.486 | 4.077 | 4.667 | 5.258 | 5.848 | 6.439 | 7.030 | 7.620 |
| | | | (mm) | (43,56) | (58,55) | (73,56) | (88,54) | (103,56) | (118,54) | (133,55) | (148,54) | (163,55) | (178,56) | (193,55) |
| | | B | in. | 1.467 | 2.057 | 2.648 | 3.238 | 3.829 | 4.419 | 5.010 | 5.600 | 6.191 | 6.782 | 7.372 |
| | | | (mm) | (37,26) | (52,25) | (67,26) | (82,25) | (97,26) | (112,24) | (127,25) | (142,24) | (157,25) | (172,26) | (187,25) |
| | NO MTG. EARS | C | in. | .979 | 1.569 | 2.160 | 2.750 | 3.341 | 3.932 | 4.522 | 5.112 | 5.703 | 6.294 | 6.884 |
| | | | (mm) | (24,87) | (39,85) | (54,86) | (69,85) | (84,86) | (99,87) | (114,86) | (129,84) | (144,86) | (159,87) | (174,85) |
| | | D | in. | 1.073 | 1.663 | 2.254 | 2.844 | 3.435 | 4.025 | 4.616 | 5.206 | 5.797 | 6.388 | 6.978 |
| | | | (mm) | (27,25) | (42,24) | (57,25) | (72,24) | (87,25) | (102,24) | (117,25) | (132,23) | (147,24) | (162,26) | (177,24) |

### 0.787" (20mm) CENTERS

STATIONS

| | | Dimension | | 2 | 3 | 4 | 5 | 6 | 7 | 8 |
|---|---|---|---|---|---|---|---|---|---|---|
| MTG. EARS | | A | in. | 1.911 | 2.699 | 3.486 | 4.274 | 5.061 | 5.848 | 6.636 |
| | | | (mm) | (48,54) | (68,55) | (88,54) | (108,56) | (128,55) | (148,54) | (168,55) |
| | | B | in. | 1.663 | 2.451 | 3.238 | 4.026 | 4.813 | 5.600 | 6.388 |
| | | | (mm) | (42,24) | (62,26) | (82,24) | (102,26) | (122,25) | (142,24) | (162,25) |
| | NO MTG. EARS | C | in. | 1.175 | 1.963 | 2.750 | 3.538 | 4.325 | 5.112 | 5.900 |
| | | | (mm) | (29,84) | (49,86) | (69,85) | (89,86) | (109,86) | (129,84) | (149,86) |
| | | D | in. | 1.269 | 2.057 | 2.844 | 3.632 | 4.419 | 5.206 | 5.994 |
| | | | (mm) | (32,23) | (52,25) | (72,24) | (92,25) | (112,24) | (132,23) | (152,25) |

DIMENSIONS ARE FOR REFERENCE ONLY Inch (mm)

* Please visit the product pages on our website for the most up-to-date product information

# MULTIPLE-STATION SWITCHES (continued)

## MULTI-SWITCH PUSHBUTTONS

| | Illuminated | | | Non-Illuminated | | | | | |
|---|---|---|---|---|---|---|---|---|---|
| Switch Series | Fig. 1 | Fig. 2 | Fig. 3 | Fig. 4 | Fig. 5 | Fig. 6 | Fig. 7 | Fig. 8 | Fig. 9 |
| | | | | | | | | | |
| Pushbutton Series[1] | 400[4] | 409[5] | DW300[6] | A-590 | E-590[5] | A-650 | TDW-F | Type I | Type II |
| 35000 | | | | X-(Std.) | X | | | | |
| 37000 | X (Std.) | X | | | | | | | |
| 38000 | X (Std.) | X | | | | | | | |
| 65000[2] | | | | | | | | | |
| 67000 | | | X (Std.) | | | | | | |
| 90000[3] | | | | | | X | | | |
| 92000[3] | | | | | | X | X | | |
| IBS[3] | | | | | | | | X | X |

1. Any pushbutton series can be specified with engraved legends.
2. Buttons are an integral part of switch assembly on Series 65000.
3. Switches stocked without pushbuttons due to wide variety that can be used. Order buttons separately.
4. Display screens and inserts are also available in a wide choice of colors; see “SPECIAL EFFECTS COLOR DISPLAY SCREENS AND INSERTS”.
5. Double width button
6. Colored inserts are available in a wide choice of colors; see “SERIES DW40 COLOR INSERTS”.

### SPECIFYING NOTE:

Most pushbuttons can be specified in red, black, green, blue, white or yellow. “Black-Screen”, amber, clear, and other colors are also possible. Contact Switchcraft with your requirements.

## SERIES TDWF - “FLIP-FLOP” PUSHBUTTONS

Unique internal “flip-flop” mechanism permits button face to change colors without electrical energy, lamps or wiring. When pushbutton is operated, highly reflective panels inside housing change position and use ambient light to give a bright illuminated effect. Black pushbuttons are .59" (15mm) high x .63" (16mm) wide. Display window is .315" (8mm) x .374" (9.5mm) wide.

**NOTE:** “FLIP-FLOP” PUSHBUTTONS ARE DESIGNED FOR USE WITH SERIES 92000 SWITCHES ONLY.
Order “flip-flop” pushbuttons with Series 92000 switches.
**TDW-F “Flip-Flop” Pushbutton Part Numbering**

### TDW-F “FLIP-FLOP” PUSHBUTTON PART NUMBERING

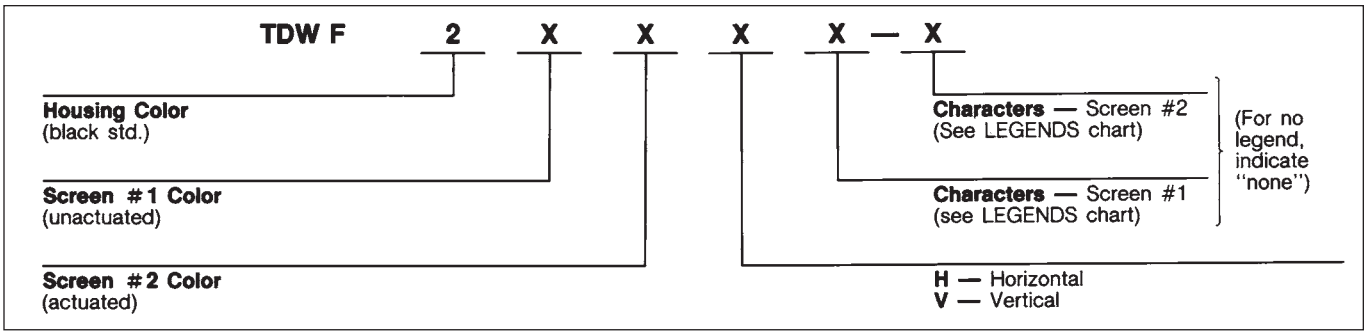


DIMENSIONS ARE FOR REFERENCE ONLY Inch (mm)


® Registered trademark of Switchcraft, Inc.
Note: Contact your Switchcraft Representative for price and delivery

* Please visit the product pages on our website for the most up-to-date product information

# MULTIPLE-STATION SWITCHES (continued)

## MULTI-SWITCH PUSHBUTTONS
**TDWF PUSHBUTTON LEGENDS (special order)**

**Horizontally Mounted Switches:** Three, .125" (3.18 mm) high characters, each pushbutton.
**Vertically Mounted Switches:** Three, .125" (3.18 mm) high characters, each pushbutton.

### LEGEND CHARACTERS AVAILABLE

| | | | |
|---|---|---|---|
| 1 through 999 | | A through ZZZ | |
| . | Period | " | Quotes |
| - | Short Dash | -- | Long Dash |
| ← | Arrow | & | Ampersand |
| # | Number or Pound | / | Slash |
| $ | Dollar | ¢ | Cent |
| \| | Vertical Bar | | |

**NOTE:** Recommended minimum standoff for switches mounted with TDW-F pushbutton is .5" (12.7mm).

## SERIES X, Y AND Z "GLO-BUTTON"
Non-illuminated pushbuttons provide a clearly visible legend like illuminated pushbuttons - without lamps, wiring or power. With button depressed, illuminator moves up behind front screen, and legend "lights up" by efficient reflection of external ambient light. With button in "out" position, illuminator retracts and legend appears non-luminous. Series X - specify for horizontal or vertical mount switches. Series Y - legends marked across .625" (15.88 mm) dimension. For horizontal mount switches. Series Z - legends marked across .75" (19.05 mm) dimension. For vertical mount switches.

| Part Number | Figure | Screen Color | Illuminator Color | Size inches (mm) | |
|---|---|---|---|---|---|
| | | | | Width | Height |
| X21248◊ | 10 | Black | Orange-Red | .5 (12.7) | .5 (12.7) |
| X51248◊ | 10 | White | | | |
| Y21248◊ | 11 | Black | Orange-Red | .625 (15.88) | .75 (19.05) |
| Y28248◊ | 11 | Black | Chartreuse | | |
| Y51248◊ | 11 | White | Orange-Red | | |
| Z21248◊ | 12 | Black | Orange-Red | .75 (19.05) | .625 (15.88) |
| Z28248◊ | 12 | Black | Chartreuse | | |
| Z51248 | 12 | White | Orange-Red | | |

## MULTI-SWITCH PUSHBUTTON PART NUMBERS
Use the information below to specify colors of the pushbutton series desired. Series TDWF must be specified separately (see page 316).

| PART NUMBER | FIGURE | COLOR | Overall Size Inch (mm) | |
|---|---|---|---|---|
| | | | Width | Height |
| ◊40001 | 1 | Red | . | . |
| ◊40002 | | Black | | |
| ◊40003 | | Green | | |
| ◊40004 | | Blue | .594 (15.09) | .974 (24.7) |
| 40005 | | White | | |
| ◊40008 | | Yellow | | |
| 40012 | | Clear | | |
| ◊40901 | 2 | Red | 1.219 (30.96) | .719 (18.26) |
| ◊40902 | | Black | | |
| ◊40903 | | Green | | |
| ◊40904 | | Blue | | |
| ◊40905 | | White | | |
| ◊40908 | | Yellow | | |
| ◊40912 | | Clear | | |
| A591 | 4 | Red | .594 (15.09) | .594 (15.09) |
| A592 | | Black | | |
| ◊A593 | | Green | | |
| ◊A594 | | Blue | | |
| A595 | | White | | |
| ◊A596 | | Brown | | |
| ◊A598 | | Yellow | | |
| ◊E591 | 1 | Red | 1.234 (31.34) | .594 (15.09) |
| ◊E592 | | Black | | |
| ◊E594 | | Blue | | |
| ◊E595 | | White | | |
| ◊E596 | | Brown | | |
| ◊E598 | | Yellow | | |

◊ Available on special order only; contact Switchcraft for price and delivery.

DIMENSIONS ARE FOR REFERENCE ONLY Inch (mm)

* Please visit the product pages on our website for the most up-to-date product information

Switchcraft®



® Registered trademark of Switchcraft, Inc.
Note: Contact your Switchcraft Representative for price and delivery

* Please visit the product pages on our website for the most up-to-date product information

03BL2M....47
05BL3M....47
05BL5M....47
05CL3M....46
05CL5M....46
05DL3M....47
05DL5M....47
05GM3M....46
05GM5M....46
05YL3M....47
05YL5M....47
06AL5F....48
06EL5F....48
09BL4M....47
09CL4M....46
09DL4M....47
09GM4M....46
09YL4M....47
101....274
101S....274
102....274
102S....274
103....274
103S....274
11....94
11001....231
11001L....231
11002....231
11002L....231
11003....231
11003D....231
11003DL....231
11003L....231
11004....231
11004L....231
11005....231
11005L....231
11006....231
11006D....231
11006DL....231
11006L....231
11008....231
11008L....231
11009....231
11009L....231
11012....231
11012L....231
111....98
111PC....98
111PCS....100
11201....231
11201L....231
11202....231
11202L....231
11203....231
11203D....231
11203DL....231
11203L....231
11204....231
11204L....231
11205....231
11205L....231
11206....231
11206D....231
11206DL....231
11206L....231
11208....231
11208L....231
11209....231
11209L....231
11212....231
11212L....231
112A....98
112APC....98
112APCS....100
112B....98
112BPC....98
112BPCS....100
113....98
113B....98
113BPC....98
113BPC1M....98
113BPCS....100
113D....98
113DPC....98
113E....98
113EPC....98
113EPCS....100
113F....98
113FPC....98
113FPCS....100
113PC....98
113PCS....100
114B....98
114BPC....98
114BPC1M....98
114BPCS....100
120....108
1200....203
12001....297
12002....297
12003....297
12003D....297
12004....297
12005....297
12006....297
12006D....297
12010....297
12011....297
12012....297
12013....297
12014....297
12015....297
12016....297
12017....297
12033....297
12033T....297
12034....297
12035....297
12036....297
12036D....297
12037....297
12037T....297
121....108
1230....108
1238....108
125....109
128....108
12A....94
12B....94
12BL5M....47
12BL6M....47
12CL5M....46
12DL5M....47
12DL6M....47
12GM5M....46
12GM6M....46
12YL5M....47
13....94
131....108
133....155
1332A....203
1332B....203
1334B....203
1394RAPC....58
1394SMT....58
13A....94
13AL5F....48
13AL6F....48
13B....94
13E....94
13EL5F....48
1400....203
1400301....203
1400315....203
142A....110
14B....94
151....107
152....107
152B....107
153....107
1532A....203
1532A301....203
1532B....203
1532B301....203
1534B....203
154....107
155....107
15AL7F....48
15AL8F....48
15BL7M....47
15BL8M....47
15CL7M....46
15CL8M....46
15DL7M....47
15EL8F....48
15GM7M....46
15GM8M....46
15J9068....230
15J9076....230
15J9077....230
15J9078....230
160....147
1600....212
1632A....212
1632B....212
1634B....212
16J1055....223
170....147
1700....212
172....148
173....152
174S....152
175....152
176S....152
177S....152
178....152
1789....212
179....152
181....148
182....148
182QB....147
182QBD....147
184....147
184L....147
187....149
187B....149
187BD....149
187BL....149
187D....149
187L....149
188....149
18QA18....262
18QB18....262
18QD18....262
18QF18....262
18QH18....262
18QK18....262
18QN18....262
190....151
190A....151
190B....151
190BL....151
201....274
201S....274
202....274
202S....274
203....274
203S....274
20GM8M....46
20Q*20**....262
220....153
225....153
226....154
227....153
228....153
229....153
22QB22....263
22QD22....263
22QF22....263
22QK22....263
22QN22....263
230....153
2300....86
2331....86
2332A....86
2332B....86
2333....86
235....153
236....154
237....153
238....153
239....153
240....145
2400....205
2432A....205
2432B....205
2434B....205
245....145
24B....109
25....109
250....145
2501F....65
2501M....65
2501MP....65
2532A....205
2532B....205
2533....205
2533B....205
2534B....205
2542B....205
2544B....205
255....145
2588....205
2589....205
260....145
2600....205
2600301....205
2600310....205
267....145
269....145
26U1003....278
26U1004....278
26U1005....278
26U1006....278
26U1007....278
26U1008....278
26U1009....278
26U1010....278
270....145-146
2732A....205
2732A301....205
2732B....205
2732B301....205
2733B....205
2734B....205
2734B301....205
2789....205
280....145-146
281....145-146
282....155
285....145-146
285L....145
288....145-146

* Please visit the product pages on our website for the most up-to-date product information

290 ....145-146
297 ....145-146
298 ....146, 155
299 ....150
2BL6M ....47
2C1072 ....134
2P-1216 ....148
2P1248 ....145
2P1251 ....147
2P1298 ....145
2P1384 ....157
2P1419 ....158
2P1495 ....145
2P1509 ....153
2P1515 ....162
2P1624 ....162
2P2003 ....143
305HJ084184 ....247
305KD084184 ....247
306HK042306 ....247
306HK084306 ....247
321 ....27
322 ....27
323 ....27
324 ....27
32HR*** ....240
330F1 ....161
330F2 ....161
332A ....159
336A ....159
336B ....159
33HR*** ....240
340 ....159
345A ....159
349A ....159
350 ....148
3501F ....123
3501FP ....123
3501FR ....123
3501M ....161
3501MC ....161
3502 ....161
35021K206 ....303
35021K212 ....303
35022206 ....303
35022212 ....303
35027206 ....303
35027212 ....303
3502A ....161
3502AAU ....161
3502ABAU ....161
3502RA ....161
3502RAAU ....161
3502RABAU ....161
3503 ....123
35041K206 ....303
35041K212 ....303
35042206 ....303
35042212 ....303
35047206 ....303
35047212 ....303
3504M ....161
3505F ....123
35061K206 ....303
35061K212 ....303
35062206 ....303
35062212 ....303
35067206 ....303
35067212 ....303
3507 ....161
35081K206 ....303
35081K212 ....303
35082206 ....303
35082212 ....303
35087206 ....303
35087212 ....303
35101K206 ....303
35101K212 ....303
35102206 ....303
35102212 ....303
35107206 ....303
35107212 ....303
35121K206 ....303
35121K212 ....303
35122206 ....303
35122212 ....303
35127206 ....303
35127212 ....303
3514PC ....123
3515PC ....123
3517PC ....123
352A ....159
35581 ....161
35582 ....161
35585 ....161
35HDBAU ....156
35HDBAUS ....156
35HDBN ....156
35HDBNS ....156
35HDNAU ....156
35HDNAUS ....156
35HDNN ....156
35HDNNS ....156
35HDRAAU ....156
35HDRABAU ....156
35HDRANN ....156
35HR*** ....240
35PM1 ....119
35PM2A ....119
35RAPC2AH3 ....114, 116
35RAPC2AHN2 ....114, 116
35RAPC2AHN3 ....114
35RAPC2AV ....114-115
35RAPC2AV4 ....114-115
35RAPC2AVN4 ....114
35RAPC2BH3 ....114, 116
35RAPC2BHN2 ....114, 116
35RAPC2BHN3 ....114
35RAPC2BV4 ....114-115
35RAPC2BVN4 ....114
35RAPC3BH3 ....114, 116
35RAPC3BHN2 ....114, 116
35RAPC3BHN3 ....114
35RAPC3BV4 ....114-115
35RAPC3BVN4 ....114
35RAPC4BH3 ....114, 116
35RAPC4BHN2 ....114, 116
35RAPC4BHN3 ....114
35RAPC4BV4 ....114-115
35RAPC4BVN4 ....114
35RAPC7J ....112
35RAPC7JS ....112
35RASMT ....117
35RASMT2AHNTR ....117
35RASMT2BHNTR ....117
35RASMT3BHNTR ....117
35RASMT4BHNTR ....117
361A ....159, 265
362A ....265
363 ....159
364A ....159
365 ....159
36HR*** ....240
37021K1206 ....305
37021K1212 ....305
370221206 ....305
370221212 ....305
370271206 ....305
370271212 ....305
37041K1206 ....305
37041K1212 ....305
370421206 ....305
370421212 ....305
370471206 ....305
370471212 ....305
37061K1206 ....305
37061K1212 ....305
370621206 ....305
370621212 ....305
370671206 ....305
370671212 ....305
37081K1206 ....305
37081K1212 ....305
370821206 ....305
370821212 ....305
370871206 ....305
370871212 ....305
370A ....159
37101K1206 ....305
37101K1212 ....305
371021206 ....305
371021212 ....305
371071206 ....305
371071212 ....305
37121K1206 ....305
37121K1212 ....305
371221206 ....305
371221212 ....305
371271206 ....305
371271212 ....305
374 ....159
376 ....159
377 ....159
380 ....148
38021K1206 ....305
38021K1212 ....305
380221206 ....305
380221212 ....305
380271206 ....305
380271212 ....305
38041K1206 ....305
38041K1212 ....305
380421206 ....305
380421212 ....305
380471206 ....305
380471212 ....305
38061K1206 ....305
38061K1212 ....305
380621206 ....305
380621212 ....305
380671206 ....305
380671212 ....305
38081K1206 ....305
38081K1212 ....305
380821206 ....305
380821212 ....305
380871206 ....305
380871212 ....305
38101K1206 ....305
38101K1212 ....305
381021206 ....305
381021212 ....305
381071206 ....305
381071212 ....305
38121K1206 ....305
38121K1212 ....305
381221206 ....305
381221212 ....305
381271206 ....305
381271212 ....305
383A ....27
384A ....27
386A ....28
387A ....28
389 ....28
390 ....28
391Q13 ....28
391Q23 ....28
391Q33 ....28
391Q43 ....28
391Q53 ....28
391Q63 ....28
40 ....147
40001 ....317
40002 ....317
40003 ....317
40004 ....317
40005 ....317
40008 ....317
40012 ....317
40101 ....306
40103 ....306
40104 ....306
40105 ....306
40108 ....306
40112 ....306
40116 ....306
40201 ....306
40203 ....306
40204 ....306
40205 ....306
40208 ....306
40212 ....306
40401 ....306
40403 ....306
40404 ....306
40405 ....306
40408 ....306
40412 ....306
40502 ....306
40505 ....306
406 ....306
40701 ....306
40703 ....306
40704 ....306
40705 ....306
40708 ....306
40901 ....317
40902 ....317
40903 ....317
40904 ....317
40905 ....317
40908 ....317
40912 ....317
41 ....110
411 ....141
412 ....141
41203 ....298
41206 ....298
41208 ....298
41212 ....298
41306 ....298
41308 ....298
41312 ....298
41324 ....298
414 ....141
415 ....141
420 ....138
425 ....138
42A ....110
43A ....110
44 ....65
46201ME ....284
46201MR ....284
46202LE ....284
46202LR ....284
46202ME ....284
46202MR ....284
46203LE ....284
46203LR ....284
46203LSE ....284
46203LSR ....284
46203ME ....284
46203MR ....284





® Registered trademark of Switchcraft, Inc.

* Please visit the product pages on our website for the most up-to-date product information

46204LE....284
46204LR....284
46204ME....284
46204MR....284
46206LE....284
46206LFE....284
46206LFR....284
46206LR....284
46206LSE....284
46206LSR....284
46206ME....284
46206MP....284
46206MR....284
46256LFR....284
46311LDR....285
46311MDR....285
46311TDR....285
46313LDR....285
46313MDR....285
46313TDR....285
47202LE....286
47202LR....286
47203LE....286
47203LR....286
47204LCE....286
47204LCR....286
47204LE....286
47204LR....286
47206LCE....286
47206LCR....286
47206LE....286
47206LR....286
47215LCR....286
47215LR....286
47217LCR....286
47217LR....286
47221LCR....286
47221LR....286
47227LFE....286
47227LFR....286
482....140
482N....140
482NC....140
483N....140
483NC....140
49101....232
49102....232
49105....232
49201....232
49202....232
49205....232
49301....232
49302....232
49305....232
49309L....287
49309LS....287
49312L....287
49312LS....287
49329L....287
49329LS....287
49331L....287
49331LS....287
50207L....287
50207M....287
50208L....287
50209L....287
50209LS....287
50209M....287
50209MS....287
50212L....287
50212LS....287
510....106
512....106
515....106
516-090-000-301....178
516-090-000-302....178
516-120-000-101....178
516-120-000-102....178
516-290-500....178
516-290-590....178
520....106
53B....109
54A....109
54B....109
55....109
5501F....65
5501M....65
5501MF....65
5501MP....65
55HA2F....50
56206L1....288
56206L2....288
56313L1....289
56313L2....289
570....146
57GB3F....49
57GB5F....49
57HB3F....50
57HB5F....50
57KD3M....48
57NC5F....50
57PC3F....51
57PC3FS....52
57PC5F....51
57PC5FS....52
580....146
581....146
585....146
588....146
58NC3F....50
590....146
597....146
598....146
59GB3F....49
60....151
60GB4F....49
60HA4F....50
60NC4F....50
60PC4F....51
60PC4FS....52
610....106
612....106
615....106
61GB5F....49
61GB6F....49
61HA5F....50
61NC5F....50
61PC5F....51
61PC5FS....52
61PC6F....51
61PC6FS....52
620....106
62206L....290
62GB7F....49
62GB8F....49
62HB7F....50
62HB8F....50
62NC7F....50
62NC8F....50
62PC7F....51
62PC7FS....52
62PC8F....51
62PC8FS....52
65021K206....309
65021K212....309
65022206....309
65022212....309
65027206....309
65027212....309
65041K206....309
65041K212....309
65042206....309
65042212....309
65047206....309
65047212....309
65061K206....309
65061K212....309
65062206....309
65062212....309
65067206....309
65067212....309
65081K206....309
65081K212....309
65082206....309
65082212....309
65087206....309
65087212....309
65101K206....309
65101K212....309
65102206....309
65102212....309
65107206....309
65107212....309
65121K206....309
65121K212....309
65122206....309
65122212....309
65127206....309
65127212....309
67021K506....310
67021K512....310
67022506....310
67022512....310
67027506....310
67027512....310
67041K506....310
67041K512....310
67042506....310
67042512....310
67047506....310
67047512....310
67061K506....310
67061K512....310
67062506....310
67062512....310
67067506....310
67067512....310
67081K506....310
67081K512....310
67082506....310
67082512....310
67087506....310
67087512....310
67101K506....310
67101K512....310
67102506....310
67102512....310
67107506....310
67107512....310
67121K506....310
67121K512....310
67122506....310
67122512....310
67127506....310
67127512....310
70....147
712A....134
712RA....134
722A....134
722RA....134
732A....134
732RA....134
740....157
745....157
750....157
755....157
760....162
760K....162
761K....162
765....162
765K....162
766K....162
770....157
780....157
80....108
820....142
830....108
838....108
84206....296
84206L....296
84212....296
84212L....296
84306....296
84306L....296
84312....296
84312L....296
84324....296
84324L....296
850....121, 158
851....158
852....158
853....158
855....158
856....158
857....158
858....158
860....162
865....162
88....108
880....158
881....158
882....158
883....158
90....151
90022B06....312
90022B12....312
90024B06....312
90024B12....312
90027B06....312
90027B12....312
90042B06....312
90042B12....312
90044B06....312
90044B12....312
90047B06....312
90047B12....312
90062B06....312
90062B12....312
90064B06....312
90064B12....312
90067B06....312
90067B12....312
90082B06....312
90082B12....312
90084B06....312
90084B12....312
90087B06....312
90087B12....312
90102B06....312
90102B12....312
90104B06....312
90104B12....312
90117B06....312
90117B12....312
90122B06....312
90122B12....312
90124B06....312
90124B12....312
90127B06....312
90127B12....312
903....273
903D....273
9115....30
9129....30

* Please visit the product pages on our website for the most up-to-date product information

913....273
913D....273
9144....30
921....245, 276
921K....245, 276
923....273
923D....273
9244....30
933....273
933D....273
951....273
952....273
953....273
961....273
962....273
963....273
97GV***....244
982A01R....269
982A03R....269
982A06R....269
99GD0726....244
99GV***....244
A1600....212
A1632B....212
A1634B....212
A3F....4-5
A3F01....5
A3F02....5
A3F03....5
A3F04....5
A3F05....5
A3F06....5
A3F07....5
A3F08....5
A3F09....5
A3FB....4
A3FBAU....4
A3FD....4
A3FL....4
A3FS....4
A3M....4-5
A3M01....5
A3M02....5
A3M03....5
A3M04....5
A3M05....5
A3M06....5
A3M07....5
A3M08....5
A3M09....5
A3MB....4
A3MBAU....4
A3ML....4
A3MS....4
A4F....4
A4FB....4
A4FBAU....4
A4FD....4
A4FL....4
A4M....4
A4MB....4
A4MBAU....4
A4ML....4
A591....317
A592....317
A593....317
A594....317
A595....317
A596....317
A598....317
A5F....4
A5FB....4
A5FBAU....4
A5FD....4
A5FL....4
A5M....4
A5MB....4
A5MBAU....4
A5ML....4
A6501....312
A6502....312
A6503....312
A6504....312
A6505....312
A6508....312
A6F....4
A6FB....4
A6FBAU....4
A6M....4
A6MBAU....4
A7F....4
A7FB....4
A7FBAU....4
A7M....4
A7MBAU....4
AA3F....4
AA3FB....4
AA3FBAU....4
AA3FD....4
AA3FL....4
AA3FLD....4
AA3M....4
AA3MB....4
AA3MBAU....4
AA3ML....4
AA4F....4
AA4FB....4
AA4FD....4
AA4FL....4
AA4M....4
AA4ML....4
AA5F....4
AA5FB....4
AA5FD....4
AA5FL....4
AA5M....4
AA5MB....4
AA5ML....4
AA6F....4
AA6FB....4
AA6FD....4
AA6FL....4
AA6M....4
AA6ML....4
AA7F....4
AA7FB....4
AA7FD....4
AA7FL....4
AA7M....4
AA7ML....4
AAA*F....6
AAA*M....6
AD1600....212
AD1632B....212
AD1634....212
AQGP322....4
AQGP323....4
B1600....212
B1632B....212
B1634B....212
B1650....212
B1700....212
B1795....212
B1796....212
B3F....10
B3FB....10
B3M....10
B3MB....10
B4F....10
B4M....10
B5F....10
B5M....10
B6F....10
B6M....10
B7F....10
B7M....10
BD1600....212
BD1632B....212
BD1634B....212
BD1650....212
BD1700....212
BD1795....212
BD1796....212
BPJF01....123
BPJF01AU....123
BPJF02....123
BPJF02AU....123
BPJF03....123
BPJF03AU....123
BPJF04....123
BPJF04AU....123
BPJF05....123
BPJF05AU....123
BPJF06....123
BPJF06AU....123
BPJJ01....123
BPJJ01AU....123
BPJJ02....123
BPJJ02AU....123
BPJJ03....123
BPJJ03AU....123
BPJJ04....123
BPJJ04AU....123
BPJJ05....123
BPJJ05AU....123
BPJJ06....123
BPJJ06AU....123
BPJR01....123
BPJR01AU....123
BPJR02....123
BPJR02AU....123
BPJR03....123
BPJR03AU....123
BPJR04....123
BPJR04AU....123
BPJR05....123
BPJR05AU....123
BPJR06....123
BPJR06AU....123
BXR011....272
BXR0110....272
BXR011PC....272
BXR013....272
BXR013P....272
BXR016....272
BXR016P....272
BXR021....272
BXR0210....272
BXR021PC....272
BXR023....272
BXR023P....272
BXR026....272
BXR026PC....272
BXR03....272
BXR0310....272
BXR0310PC....272
BXR031PC....272
BXR033....272
BXR033PC....272
BXR036....272
BXR036PC....272
BXR051....272
BXR0510....272
BXR051PC....272
BXR053....272
BXR053PC....272
BXR056....272
BXR056PC....272
C11....94
C12A....94
C12B....94
C1600....212
C1634B....212
C240....145
C245....145
C270....145
C3F....10
C3M....10
C46203LR....284
C46204MR....284
C46206LFR....284
C46206LR....284
C4F....10
C4M....10
C55B....109
C56206L1....288
C56206L2....288
C56313L1....289
C56313L2....289
C5F....10
C5M....10
C62206L....290
C63212L....290
C6F....10
C6M....10
C7F....10
C7M....10
CB3F....65
CB3M....65
CD1600....212
CD1634B....212
CMT331....83
CMT332....83
CMT332A....83
CMT332B....83
CMT332C....84
CMT333....83
CMT333A....83
CMT333B....84
CMT334-B....83
CMT334A....83
CMT334C....83
CMT334E....83
CMT334F....83
CMT335....83
CMT335A....84
CMT336....83
CMT336A....83
CMT336B....83
CMT336C....83
CMT336D....83
CMT336E....83
CMT337....83
CMT338....83
CMT339....83
CMT341....84
CMT342B....84
CMT344B....84
CMT346....83
CMT346C....84
CMT351C....83
CMT354F....83
CMT356C....83
CMT358....83
CMT359....83
CN11....109
CN12A....109
CN12B....109
CN13B....109
CPC102A....263
CPC102D....263
CPC102F....263
CPC102K....263
CPC102N....263



® Registered trademark of Switchcraft, Inc.

Note: Contact your Switchcraft Representative for price and delivery

* Please visit the product pages on our website for the most up-to-date product information

CPC102R....263
CPC102T....263
CPC102U....263
D1600....212
D1632A....212
D1632B....212
D1634B....212
D1700....212
D1789....212
D3F....9
D3FB....9
D3FBAU....9
D3FD....9
D3FDB....9
D3M....9
D3MB....9
D3MBAU....9
D4F....9
D4FB....9
D4FBAU....9
D4M....9
D4MB....9
D4MBAU....9
D5F....9
D5FB....9
D5FBAU....9
D5M....9
D5MB....9
D5MBAU....9
D6F....9
D6FB....9
D6FBAU....9
D6FDB....9
D6M....9
D6MB....9
D6MBAU....9
D7F....9
D7FB....9
D7FBAU....9
D7M....9
D7MB....9
D7MBAU....9
DA013....275
DA023....275
DA033....275
DA043....275
DA053....275
DA083....275
DMD*FRA***....53
DS301....236
DS302....236
DS303....236
DS306....236
DS307....236
DS308....236
DS311....237
DS312....237
DS313....237
DS316....236
DS317....236
DS318....236
DS321....238
DS322....238
DS323....238
DS350....238
DS351....238
DS352....238
DS353....238
DUSB....56
DW05....311
DW1....311
DW101....311
DW102....311
DW201....311
DW202....311
DW205....311
DW3....311
DW301....310
DW302....310
DW303....310
DW304....310
DW305....310
DW308....310
DW312....310
DW313....310
DW316....310
DW4....311
DW41....310
DW43....310
DW44....310
DW45....310
DW47....310
DW48....310
DW7....311
E*F....12
E*M....12
E111L....107
E112BL....107
E591....317
E592....317
E594....317
E595....317
E596....317
E598....317
E903....276
E903D....276
E913....276
E913D....276
EAC225....71
EAC227....70
EAC233....70
EAC233S....70
EAC305....70
EAC309....70
EAC311....70
EAC315....70
EAC319....70
EAC323....70
EAC325....70
EAC327....70
EAC333....70
EAC333S....70
EAC405....70
EAC409....70
EAC411....70
EAC413....70
EAC451....70
EAC453....70
EAC455....70
EAC457....70
ED903....276
ED903D....276
ED913....276
ED913D....276
EH13942....16
EHBNC2....16
EHBNCSC....16
EHCAT62....16
EHRCA2....16
EHRCABNC....16
EHUSB2....16
EN3C**....43
EN3CR....42
EN3CRAUTO....42
EN3I**....45
EN3INS16....42
EN3INS20....42
EN3P**....44
EN3POS16....42
EN3POS20....42
EP903....276
EP903D....276
EP913....276
EP913D....276
EPS1PC1....291
EPS1PC2....291
EPS1PC3....291
EPS1SL1....291
EPS2PC1....291
EPS2PC2....291
EPS2PC3....291
EPS3PC1....291
EPS3PC2....291
EPS3PC3....291
EPS3SL1....291
EPS4PC1....291
EPS4PC2....291
EPS4PC3....291
F3FRAF....23
F3FSTF....23
F3MRAF....23
F3SM3F....23
FA11....94
FAL11....94
G3MS....26
G4MS....26
G6083....296
G6084....296
H101....275
H101PC....275
H102....275
H102PC....275
H103....275
H103D....275
H103PC....275
H201....275
H201PC....275
H202....275
H202PC....275
H203....275
H203D....275
H203PC....275
H3MS....26
H4MS....26
HP75BNC1....66
HP75BNC10....66
HP75BNC12....66
HP75BNC2....66
HP75BNC6....66
HP75BNC7....66
HP75BNC9....66
HPCC4F....38
HPCC4FRA....38
HPCI4F....38
HPCP*4....40
HPCPK112F....190
HPCPK112F1....190
HPCPK1B....190
HPCPK324F....190
HPCPK324F1....190
HPCPK3B....190
IBS10B02106AR....314
IBS10B04106AR....314
IBS10B06106AR....314
IBS10B08106AR....314
IBS10B10106AR....314
IBS10B12106AR....314
IBS15B02106AR....314
IBS15B04106AR....314
IBS15B06106AR....314
IBS15B08106AR....314
IBS15B10106AR....314
IBS15B12106AR....314
IBS20B02106AR....314
IBS20B04106AR....314
IBS20B06106AR....314
IBS20B08106AR....314
IBS20B10106AR....314
IBS20B12106AR....314
J3FS....26
J4MS....26
JP012000....207
JP012S32A....207
JP012S32B1....207
JP012S34B1....207
JP022000....207
JP022S32A....207
JP022S32B....207
JP022S34B....207
JP032000....207
JP032S32A....207
JP032S32B....207
JP032S34B....207
JP042000....207
JP042S32A....207
JP042S32B....207
JP042S34B....207
JP052000....207
JP052S32A....207
JP052S32B....207
JP052S34B....207
JP062000....207
JP062S32A....207
JP062S32B....207
JP062S34B....207
JP072000....207
JP072S32A....207
JP072S32B....207
JP072S34B....207
JP082000....207
JP082S32A....207
JP082S32B....207
JP082S34B....207
JP092000....207
JP092S32A....207
JP092S32B....207
JP092S34B....207
JP102000....207
JP102S32A....207
JP102S32B....207
JP102S34B....207
JP112000....207
JP112S32A....207
JP112S32B....207
JP112S34B....207
JP122000....207
JP122S32A....207
JP122S32B....207
JP122S34B....207
JP312000....210
JP322000....210
JP9902....207
JP9922....207
JP9942....207
JPD312000....210
JPD322000....210
K131....296
K255....5
K3FS....26
K459....163
K460....163
K4FS....26
L11....94
L112A....98
L112APC....98
L112B....98
L113B....98
L114B....98
L114BPC....98
L12A....94
L12B....94
L3MN....30
L4MN....30
L5MN....30

* Please visit the product pages on our website for the most up-to-date product information

L712A....134
L712RA....134
L722A....134
L722RA....134
LUS001....271
LUS001PC....271
LUS001ST....271
M111....97
M112A....97
M112APC....97
M112B....97
M112BPC....97
M113B....97
M113E....97
M113PPC1M....97
M114B....97
M114BPC....97
M114BPC1M....97
M3M....30
M4M....30
M5M....30
MBPK175T....201
MD10....249
MD15....249
MD3....249
MD6....249
MDPC2A....121
MDPC2AR....121
MDPC2ARA....121
MDSL2A....121
MDSL2ARA....121
MDSMT2ARATR....120
MDSMT2BRATR....120
MDSMT3BRATR....120
MDSMT4BRATR....120
ML112B....97
MN111....97
MN112A....97
MN112APC....97
MN112B....97
MN112BPC....97
MN113B....97
MN113BPC....97
MN113E....97
MN114B....97
MN114BPC....97
MN122A....97
MNL112B....97
MNL113B....97
MT331....83
MT332....83
MT332A....83
MT332B....83
MT332C....83
MT333....83
MT333A....84
MT333B....83
MT333E....83
MT334A....83
MT334B....83
MT334C....83
MT334E....83
MT334F....83
MT335....83
MT335A....84
MT336....83
MT336A....83
MT336B....83
MT336C....83
MT336D....83
MT336E....83
MT337....83
MT338....83
MT339....83
MT342B....83
MT343B....84
MT344B....83
MT346....83
MT346A....84
MT346B....84
MT346C....84
MT352A....83
MT354B....83
MT355....83
MT356C....83
MT357....83
MT388....85
MT389....85
MT48FN....184
MT48HN....184
MT48K1FN....182
MT48K1HN....182
MT48K1NN....182
MT48K1NS....182
MT48K3FN....182
MT48K3HN....182
MT48K3NN....182
MT48NN....184
MT48NS....184
MT52FN....184
MT52HN....184
MT52K1FN....182
MT52K1HN....182
MT52K1NN....182
MT52K1NS....182
MT52K3FN....182
MT52K3HN....182
MT52K3NN....182
MT52NN....184
MT52NS....184
MTP24K7....174
MTP48K1NO....166
MTP48K1NS....166
MTP48K3BPNS....174
MTP48K3NO....166
MTP48K3NS....166
MTP48K3PBNO....174
MTP48K3SNO....166
MTP52K3BPNO....174
MTPFA48K1NO....164
MTPFA48K1NS....164
MTPH48K1NO....171
MTPH48K1NS....171
MTPH48K3NO....171
MTPH48K3NS....171
MTPH48K3SNO....171
MVJ*75T....137
MVJ*NT....137
MVP32K1*75T....196
MVP32K1*NT....196
MVP32K3*75T....196
MVP32K3*NT....196
N111....98
N111PC....98
N111PCS....100
N112A....98
N112APC....98
N112APCS....100
N112B....98
N112BPC....98
N112BPCS....100
N113....98
N113B....98
N113BPC....98
N113BPCS....100
N114B....98
N114BPC....98
N114BPCS....100
N3MS....25
NL111....98
NL112A....98
NL112B....98
NL113B....98
NL114B....98
NL114BPC....98
NL114BPCS....100
P2290....230
P2315....230
P2316....230
P23491....271
P234913....271
P23492....271
P23493....271
P23494....271
P23495....271
P23497....271
P23498....271
P2456....230
P286301....91
P286302....91
P286304....91
P286305....91
P286307....91
P286308....91
P286401....91
P286402....91
P286404....91
P286405....91
P286407....91
P286408....91
P2912....297
P2936....270, 314
P2937....270, 314
P2938....270, 314
P2939....270, 314
P2940....270, 314
P2941....270, 314
P2942....270, 314
P2943....270, 314
P2951....270, 314
P2952....270, 314
P2953....270, 314
P2954....270, 314
P2955....270, 314
P2956....270, 314
P2957....270, 314
P2958....270, 314
P2979....314
P2992....314
P3F....8
P3M....8
P4F....8
P4M....8
P5F....8
P5M....8
PC12A....94
PC142A....110
PC712A....134
PC722A....134
PC732A....134
PCL712A....134
PCL722A....134
PD3F***....20
PD3M***....20
PJRAN1X1U01....126
PJRAN1X1U02....126
PJRAN1X1U03....126
PJRAN1X1U04....126
PJRAN2X1U01....126
PJRAN2X1U02....126
PJRAN3X1U01....126
PJRAN3X1U02....126
PJRAS1X1S01....126
PJRAS1X1S02....126
PJRAS1X1S03....126
PJRAS1X1S04....126
PJRAS1X2S01....126
PJRAS1X2S02....126
PJRAS1X3S01....126
PJRAS1X3S02....126
PJRAS1X3U01....126
PJRAS2X1S01....126
PJRAS2X1S02....126
PJRAS2X2S01....126
PJRAS3X1S01....126
PJRAS3X1S02....126
PJRAS3X2S01....126
PJRAS3X2S02....126
PJRAS4X2U01....126
PL102....278
PL103205....277
PL103705....277
PL106205....277
PL106705....277
PL111....278
PL112205....277
PL112705....277
PL123705....277
PL126205....277
PL126705....277
PL202....278
PL203205....277
PL203705....277
PL206205....277
PL206705....277
PL211....278
PL212205....277
PL212705....277
PL226205....277
PL226705....277
PL303....278
PL305....278
PL308....278
PL403205....277
PL403705....277
PL406205....277
PL406705....277
PL412205....277
PL412705....277
PL501....278
PL503....278
PL503205....277
PL504....278
PL505....278
PL506205....277
PL506705....277
PL508....278
PL512....278
PL512205....277
PL512705....277
PL513....278
PL703705....277
PL706205....277
PL706705....277
PL712205....277
PL712705....277
PL803205....277
PL803705....277
PL806205....277
PL806705....277
PL812205....277
PL812705....277
PL9105....278
PL9205....278
PPT....163
PQG3F***....18
PQG3M***....18
PT1LA....163
PT2B....163
QG3F....25
QG3FD....25
QG3FDPC....25
QG3M....25
QG4F....25





® Registered trademark of Switchcraft, Inc.

* Please visit the product pages on our website for the most up-to-date product information

QG4FD....25
QG4M....25
QG5F....25
QG5FD....25
QG5M....25
QG6F....25
QG6FD....25
QG6M....25
QG7F....25
QG7FD....25
QG7M....25
QGP322....4
QGP323....4
QGP326....10
QGP327....10
QGP362....9
QGP363....9
QGPK116FB....188
QGPK116MB....188
QGPK18M8FB....188
QGPK1B....188
QGPK332MFB....188
QGPK3B....188
R3FZ....8
R3MZ....8
R4FZ....8
R4MZ....8
R5FZ....8
R5MZ....8
R6FZ....8
R6MZ....8
R7FZ....8
R7MZ....8
RA200....256
RA202....257
RA205....256
RA207....257
RA208....257
RA217....257
RA35....255
RA353....247
RA354....247
RA355....247
RA356....246-247
RA357....247
RA358....247
RA359....247
RA373....247
RA374....246-247
RA375....247
RA376....247
RA377....247
RA378....247
RA379....247
RA40....255
RA41....255
RA49B11....103
RA49B12A....103
RA49B12B....103
RA49B14B....103
RA49C11....103
RA49C12A....103
RA49C12B....103
RA49C14B....103
RA700....254
RA70B11....103
RA70B12A....103
RA70B12B....103
RA70B14B....103
RA70C11....103
RA70C12A....103
RA70C12B....103
RA70C14B....103
RA710....254
RA712A....241
RA722A....241
RA760....241
RA765....241
RA850....253
RAPC322....78
RAPC712....130
RAPC722....130
RAPC732....130
RAPC732OF....130
RAPC742....130
RAPC742OF....130
RAPC752....130
RAPC752S....130
RASH712....130
RASH722....130
RASH732....130
RASM712....130
RASM722....130
RASM732....130
RASM742TR....130
RASM752STR....130
RASM752TR....130
RN111PC....103
RN112APC....103
RN112BPC....103
RN113BPC....103
RN113FPC....103
RN114BPC....103
RS422H48N081....191
RS422H4N081....192
RS422H4N161....191
RS422H4N162....191-192
RS422H4N242....191-192
RS422PH4N081....191-192
RS422PH4N161....191
RS422PH4N162....191-192
RS422PH4N242....191-192
RS422PV4N081....191-192
RS422PV4N161....191
RS422PV4N162....191-192
RS422PV4N242....191-192
RS422PV4N322....191-192
RS422V4N081....191-192
RS422V4N161....191
RS422V4N162....191-192
RS422V4N242....191-192
RS422V4N322....191-192
RTT34B01....91
RTT34B02....91
RTT34B04....91
RTT34B05....91
RTT34B07....91
RTT34B08....91
RTT8701....91
RTT8702....91
RTT8704....91
RTT8705....91
RTT8707....91
RTT8708....91
S11....94
S112BPC....98
S112BPCS....100
S12A....94
S12B....94
S13B....94
S230....153
S250....151
S260....151
S267....151
S280....146, 151
S3F5M....29
S3FM....28
S4FM....28
S580....146
S5F3M....29
S5FM....28
S760....162
S760K....162
S761K....162
S765....162
S765K....162
S766K....162
S830....108
SL01....61
SL02....61
SL03....61
SL04....61
SL05....61-62
SL102F....63
SL102M....63
SL103F....63
SL103M....63
SL104F....63
SL104M....63
SL105F....63
SL105M....63
SL172F....63
SL173F....63
SL173M....63
SL174F....63
SL174M....63
SL175F....63
SL175M....63
SL18....64
SL182F....64
SL182M....64
SL183F....64
SL183M....64
SL184F....64
SL184M....64
SL185F....64
SL185M....64
SL402F....62
SL402M....62
SL403F....62
SL403M....62
SL404F....62
SL404M....62
SL405F....62
SL405M....62
SL412F....62
SL413F....62
SL413M....62
SL414F....62
SL414M....62
SL415F....62
SL415M....62
SMD*FRA***....53
SN37A11....103
SN37A12A....103
SN37A12B....103
SN37A14B....103
SN49A11....103
SN49A12A....103
SN49A12B....103
SN49A14B....103
SN49B11....103
SN49B12A....103
SN49B12B....103
SN49B14B....103
SN49C11....103
SN49C12A....103
SN49C12B....103
SN49C14B....103
SN70B11....103
SN70B12A....103
SN70B12B....103
SN70B14B....103
SN70C11....103
SN70C12A....103
SN70C12B....103
SN70C14B....103
SR00....5
SR01....5
SR02....5
SR03....5
SR04....5
SR05....5
SR06....5
SR07....5
SR08....5
SR09....5
ST121....257
ST125....256
ST131....257
ST200....257
ST230....257
ST303....247
ST304....247
ST305....247
ST306....247
ST307....246-247
ST308....247
ST309....247
ST323....247
ST324....246-247
ST325....247
ST326....247
ST327....247
ST328....247
ST329....247
ST35....255
ST40....255
ST60....255
ST600....250
ST603....250
ST604....250
ST605....250
ST626....250
ST700....254
ST710....254
ST740....254
ST750....254
ST760....241
ST765....241
ST850....253
ST90....258
ST900....245
ST900F....245
ST91....258
SUSB....56
T127410....297
T12742....297
T12745....297
T3F....9
T3FL....9
T3FLM....9
T3FM....9
T4F....9
T4FL....9
T4FLM....9
T4FM....9
TA01....31
TA02....31
TA03....31
TA04....31
TA05....31
TA06....31
TA3F....31-32
TA3FB....32
TA3FL....32
TA3FLB....32
TA3M....31-32
TA3MB....32
TA3ML....32
TA4F....32
TA4FB....32
TA4FL....32
TA4FLB....32

* Please visit the product pages on our website for the most up-to-date product information

TA4M ....32
TA4MB ....32
TA4ML ....32
TA5F ....32
TA5FL ....32
TA5FLB ....32
TA5M ....32
TA5ML ....32
TA5MLB ....32
TA6FL ....32
TA6ML ....32
TA7FL ....32
TA7ML ....32
TA8FL ....32
TA8ML ....32
TAD2 ....142
TAD3 ....142
TB3M ....33
TB3MB ....33
TB4M ....33
TB4MB ....33
TB5M ....33
TB5MB ....33
TB6M ....33
TB7M ....33
TB8M ....33
TBA03 ....37
TBA04 ....37
TBA05 ....37
TBA06 ....37
TLP4 ....33
TLP6 ....33
TQG3F ....37
TQG3M ....37
TQG4F ....37
TQG4M ....37
TQG5F ....37
TQG5M ....37
TQG6F ....37
TQG6M ....37
TR1PC ....121
TR2A ....121
TRA**M ....34
TRA3M ....34
TRA6M ....34
TRA6MF ....34
TRG4M ....33
TRGS4F ....33
TT** ....267
TT101 ....265
TT102 ....265
TT103 ....265
TT104 ....265
TT105 ....265
TT106 ....265
TT107 ....265
TT108 ....265
TT109 ....265
TT110 ....265
TT111 ....265
TT112 ....265
TT113 ....265
TT114 ....265
TT115 ....265
TT121 ....265
TT122 ....265
TT123 ....265
TT124 ....265
TT125 ....265
TT126 ....265
TT127 ....265
TT128 ....265
TT129 ....265
TT130 ....265
TT131 ....265
TT132 ....265
TT133 ....265
TT134 ....265
TT135 ....265
TT141 ....265
TT142 ....265
TT143 ....265
TT144 ....265
TT145 ....265
TT146 ....265
TT147 ....265
TT148 ....265
TT149 ....265
TT150 ....265
TT151 ....265
TT152 ....265
TT153 ....265
TT154 ....265
TT155 ....265
TT161 ....265
TT162 ....265
TT163 ....265
TT164 ....265
TT165 ....265
TT166 ....265
TT167 ....265
TT168 ....265
TT169 ....265
TT170 ....265
TT171 ....265
TT172 ....265
TT173 ....265
TT174 ....265
TT175 ....265
TT201 ....234
TT202 ....234
TT203 ....234
TT204 ....234
TT205 ....234
TT206 ....234
TT207 ....234
TT208 ....234
TT209 ....234
TT210 ....234
TT251 ....143
TT252 ....143
TT253 ....90, 143
TT253N ....143
TT253NC ....143
TT254 ....143
TT254N ....143
TT254NC ....143
TT261 ....144
TT263 ....90, 144
TT281 ....265
TT282 ....265
TT283 ....265
TT284 ....265
TT289 ....265
TT2W48MCF1 ....223
TT2W48MCN1 ....223
TT2W48VCF1 ....223
TT2W48VCN1 ....223
TT30 ....87
TT30FM ....87
TT31 ....87
TT31DC ....87
TT31FM ....87
TT31FMDC ....87
TT32A ....87
TT32ADC ....87
TT32AFM ....87
TT32AFMDC ....87
TT32B ....87
TT32BDC ....87
TT32BFM ....87
TT32BFMDC ....87
TT32C ....87
TT32CDC ....87
TT32CFM ....87
TT32CFMDC ....87
TT33 ....87
TT33B ....87
TT33BDC ....87
TT33BFM ....87
TT33BFMDC ....87
TT33DC ....87
TT33FM ....87
TT33FMDC ....87
TT34A ....87
TT34ADC ....87
TT34AFM ....87
TT34AFMDC ....87
TT34B ....87
TT34BDC ....87
TT34BFM ....87
TT34BFMDC ....87
TT34C ....87
TT34CDC ....87
TT34CFM ....87
TT34CFMDC ....87
TT34F ....87
TT34FDC ....87
TT35 ....87
TT35DC ....87
TT35FM ....87
TT35FMDC ....87
TT36 ....87
TT36A ....87
TT36ADC ....87
TT36AFM ....87
TT36AFMDC ....87
TT36B ....87
TT36BDC ....87
TT36C ....87
TT36CDC ....87
TT36CFM ....87
TT36CFMDC ....87
TT36DC ....87
TT36FM ....87
TT36FMDC ....87
TT401 ....230
TT403 ....230
TT404 ....230
TT405 ....230
TT408 ....230
TT413 ....230
TT4506 ....230
TT45106 ....230
TT45124 ....230
TT45148 ....230
TT45206 ....230
TT45224 ....230
TT45248 ....230
TT45306 ....230
TT45324 ....230
TT45348 ....230
TT45406 ....230
TT45424 ....230
TT45448 ....230
TT45524 ....230
TT45548 ....230
TT45806 ....230
TT45824 ....230
TT45848 ....230
TT4W24MCF1 ....223
TT4W24MCN1 ....223
TT4W24VCF1 ....223
TT4W24VCN1 ....223
TT501 ....236
TT502 ....236
TT503 ....236
TT504 ....236
TT505 ....212
TT506 ....212
TT507 ....212
TT508 ....212
TT509 ....212
TT51 ....215, 218
TT510 ....230, 234
TT5102000 ....217
TT5102S31 ....217
TT5102S32A ....217
TT5102S32B ....217
TT5102S33B ....217
TT5102S34B ....217
TT5102W31 ....217
TT5102W32A ....217
TT5102W32B ....217
TT5102W33B ....217
TT5102W34B ....217
TT511 ....212
TT5121 ....233
TT5122 ....233
TT5123 ....233
TT5124 ....233
TT5125 ....233
TT5128 ....233
TT5131 ....233
TT5132 ....233
TT5133 ....233
TT5134 ....233
TT5135 ....233
TT5138 ....233
TT5141 ....233
TT5142 ....233
TT5143 ....233
TT5144 ....233
TT5145 ....233
TT5148 ....233
TT5151 ....234
TT5152 ....234
TT5155 ....234
TT516 ....237
TT517 ....237
TT518 ....237
TT519 ....236
TT52 ....218
TT520 ....236
TT5202000 ....217
TT5202S31 ....217
TT5202W34B ....217
TT521 ....236
TT53 ....215, 220
TT5302000 ....219
TT5302S95 ....219
TT5302S96 ....219
TT5302W95 ....219
TT5302W96 ....219
TT54 ....215, 220
TT5402000 ....219
TT5402S95 ....219
TT5402W96 ....219
TT55 ....215, 218
TT5502S31 ....217
TT5502W34B ....217
TT552000 ....217
TT56 ....215, 218
TT5602000 ....217
TT5602S31 ....217
TT5602W34B ....217
TT57 ....220
TT58 ....215, 220
TT59 ....215, 220
TT5902000 ....219
TT5902S89 ....219
TT5902W89 ....219
TT60 ....215, 220
TT6002000 ....219





® Registered trademark of Switchcraft, Inc.
Note: Contact your Switchcraft Representative for price and delivery

* Please visit the product pages on our website for the most up-to-date product information

TT6002S89....219
TT6002W89....219
TT61....215, 220
TT6102000....219
TT6102S89....219
TT6102W89....219
TT62....215, 220
TT6202000....219
TT6202S89....219
TT6202W89....219
TT631....87
TT632A....87
TT632B....87
TT632C....87
TT633....87
TT633B....87
TT634A....87
TT634B....87
TT634C....87
TT635....87
TT636....87
TT636A....87
TT636C....87
TT6W48MCF1....223
TT6W48MCN1....223
TT6W48VCF1....223
TT6W48VCN1....223
TT722....264
TT724....264
TT726....264
TT727....264
TT728....264
TT729....264
TT741....264
TT741N0....264
TT742....264
TT742N0....264
TT744....264
TT744N0....264
TT746....264
TT746N0....264
TT747....264
TT747N0....264
TT748....264
TT749....264
TT861....264
TT862....264
TT864....264
TT866....264
TT867....264
TT868....264
TT869....264
TT89....89
TT89DC....89
TT89FM....89
TT89FMDC....89
TT91001....216
TT91002....216
TT91003....216
TT91004....216
TT91005....216
TT91008....216
TT91011....216
TT91201....216
TT91202....216
TT91203....216
TT91204....216
TT91205....216
TT91208....216
TT91211....216
TT91401....216
TT91402....216
TT91403....216
TT91404....216
TT91405....216
TT91408....216
TT91411....216
TT92001....216
TT92002....216
TT92003....216
TT92004....216
TT92005....216
TT92008....216
TT92011....216
TT92201....216
TT92202....216
TT92203....216
TT92204....216
TT92205....216
TT92208....216
TT92211....216
TT92401....216
TT92402....216
TT92403....216
TT92404....216
TT92405....216
TT92408....216
TT92411....216
TT93001....216
TT93002....216
TT93003....216
TT93004....216
TT93005....216
TT93008....216
TT93011....216
TT93301....216
TT93302....216
TT93303....216
TT93304....216
TT93305....216
TT93308....216
TT93311....216
TT93601....216
TT93602....216
TT93603....216
TT93604....216
TT93605....216
TT93608....216
TT93611....216
TT95....90
TT95DC....90
TT95FM....90
TT95FMDC....90
TT96EDACNO....178
TT96EDACNS....178
TT96FM....90
TT96FMDC....90
TTD**....267
TTD5102000....217
TTD5102S31....217
TTD5102W34B....217
TTD5202000....217
TTD520231....217
TTD5202W34B....217
TTD5302000....219
TTD5302S95....219
TTD5302W96....219
TTD5402000....219
TTD5402S95....219
TTD5402W96....219
TTD5902000....219
TTD5902S89....219
TTD5902W89....219
TTD6002000....219
TTD6002S89....219
TTD6002W89....219
TTEZN***....177
TTP96ASFN....186
TTP96ASHN....186
TTP96ASNN....186
TTP96K1FN....180
TTP96K1HN....180
TTP96K1NN....180
TTP96K3BPNS....174
TTP96K3FN....180
TTP96K3HN....180
TTP96K3NN....180
TTP96K3NS....168
TTP96K5BPNS....174
TTPFA96K1NO....164
TTPFA96K1NS....164
TTPH96K1NO....171
TTPH96K1NS....171
TTPH96K3NO....171
TTPH96K3NS....171
TY3F....37
TY3FPC....37
TY4F....37
TY4FPC....37
TY5F....37
TY5FPC....37
TYEF01....37
TYEF02....37
TYEF03....37
TYEF04....37
TYEF05....37
TYEF08....37
TYEF11....37
UJ1....93
UJ2A....93
UJ2B....93
UJ4B....93
US001....271
US001PC....271
US001ST....271
VAPK1HD*75T....199-200
VAPK1HD*NT....199
VAPK1SD*75T....199
VAPK1SD*NT....199
VAPK3HD*75T....199-200
VAPK3HD*NT....199
VAPK3SD*75T....199
VAPK3SD*NT....199
VJHD*75T....136
VJHD*75TX....195
VJHD*NT....136
VJHD*NTX....195
VJSD*75T....136
VJSD*75TX....195
VJSD*NT....136
VJSD*NTX....195
VMAFN....199
VMP**....266
VMVHD*75T....199
VMVHD*NT....199
VMVSD*75T....199
VMVSD*NT....199
VP**....266
VPP24K1HD*75T....193
VPP24K1HD*NT....193
VPP24K1SD*75T....193
VPP24K1SD*NT....193
VPP24K3HD*75T....193
VPP24K3HD*NT....193
VPP24K3SD*75T....193
VPP24K3SD*NT....193
VPP26K1HD*75T....193
VPP26K1HD*NT....193
VPP26K1SD*75T....193
VPP26K1SD*NT....193
VPP26K3HD*75T....193
VPP26K3HD*NT....193
VPP26K3SD*75T....193
VPP26K3SD*NT....193
W11003....231
W11003L....231
W11006....231
W11006L....231
W11012....231
W11012L....231
W11203....231
W11203L....231
W11206....231
W11206L....231
W11212....231
W11212L....231
W1332A....203
W1334B....203
W1532A301....203
W1532B301....203
W1534B....203
W1534B301....203
W1632B....212
W1634B....212
W1789....212
W2532A....205
W2533B....205
W2732A301....205
W2732B....205
W2732B301....205
W2734B301....205
W2789....205
W3M....25
W4M....25
WA1634B....212
WAD1634B....212
WB1650....212
WB1795....212
WB1796....212
WBD1634B....212
WBD1650....212
WBD1795....212
WC1634B....212
WCD1634B....212
WCMT331....83
WCMT332A....84
WCMT332B....83
WCMT333....84
WCMT334B....83
WCMT335....84
WCMT335A....84
WCMT336....83
WCMT336A....83
WCMT336B....84
WCMT336C....83
WCMT336D....83
WCMT336E....84
WD1632B....212
WD1634B....212
WD1789....212
WMT331....83
WMT332A....84
WMT332B....83
WMT332C....84
WMT333....84
WMT333B....84
WMT333E....84
WMT334A....84
WMT334B....83
WMT334C....84
WMT334E....84
WMT334F....84
WMT335....84
WMT335A....84
WMT336....83
WMT336A....83
WMT336B....84
WMT336C....83
WMT336D....83
WMT336E....84
WMT342B....83
WMT344B....84
WMT388....85
WMT389....85

* Please visit the product pages on our website for the most up-to-date product information

WTT31 ....87
WTT31DC ....87
WTT31FM ....87
WTT31FMDC ....87
WTT32A ....87
WTT32ADC ....87
WTT32AFM ....87
WTT32AFMDC ....87
WTT32B ....87
WTT32BDC ....87
WTT32BFM ....87
WTT32BFMDC ....87
WTT32C ....87
WTT32CDC ....87
WTT32CFM ....87
WTT32CFMDC ....87
WTT33 ....87
WTT33B ....87
WTT33BDC ....87
WTT33BFM ....87
WTT33BFMDC ....87
WTT33DC ....87
WTT33FM ....87
WTT33FMDC ....87
WTT34A ....87
WTT34ADC ....87
WTT34AFM ....87
WTT34AFMDC ....87
WTT34B ....87
WTT34BDC ....87
WTT34BFM ....87
WTT34BFMDC ....87
WTT35 ....87
WTT35DC ....87
WTT35FM ....87
WTT35FMDC ....87
WTT36 ....87
WTT36A ....87
WTT36ADC ....87
WTT36AFM ....87
WTT36AFMDC ....87
WTT36C ....87
WTT36CDC ....87
WTT36CFM ....87
WTT36CFMDC ....87
WTT36DC ....87
WTT36FM ....87
WTT36FMDC ....87
WTT631 ....87
WTT632A ....87
WTT632B ....87
WTT632C ....87
WTT633 ....87
WTT633B ....87
WTT634A ....87
WTT634B ....87
WTT634C ....87
WTT635 ....87
WTT636 ....87
WTT636A ....87
WTT636C ....87
WTT89 ....89
WTT89DC ....89
WTT89FM ....89
WTT89FMDC ....89
WTT95 ....90
WTT95DC ....90
WTT95FM ....90
WTT95FMDC ....90
WTT96FM ....90
WTT96FMDC ....90
X1332A ....203
X1332B ....203
X1334B ....203
X1532A ....203
X1532B301 ....203
X1534B ....203
X1542B315 ....203
X21248 ....317
X2432A ....205
X2432B ....205
X2434B ....205
X2532A ....205
X2532B ....205
X2534B ....205
X2732A ....205
X2732A301 ....205
X2732B ....205
X2732B301 ....205
X2734B ....205
X2734B301 ....205
X2832A ....205
X2932A ....205
X51248 ....317
XMT332A ....84
XMT332B ....84
XMT334B ....84
Y21248 ....317
Y28248 ....317
Y3F ....22
Y3FD ....22
Y3FPC ....22
Y3MPC ....22
Y51248 ....317
YEF01 ....22
YEF02 ....22
YEF03 ....22
YEF04 ....22
YEF05 ....22
YEF08 ....22
YMT332A ....84
YMT332B ....84
YMT334B ....84
Z15J ....108
Z21248 ....317
Z28248 ....317
Z51248 ....317





® Registered trademark of Switchcraft, Inc.
Note: Contact your Switchcraft Representative for price and delivery

ООО «ЛайфЭлектроникс» “LifeElectronics” LLC

ИНН 7805602321 КПП 780501001 Р/С 40702810122510004610 ФАКБ "АБСОЛЮТ БАНК" (ЗАО) в г.Санкт-Петербурге К/С 30101810900000000703 БИК 044030703

*Компания «Life Electronics» занимается поставками электронных компонентов импортного и отечественного производства от производителей и со складов крупных дистрибьюторов Европы, Америки и Азии.*

*С конца 2013 года компания активно расширяет линейку поставок компонентов по направлению коаксиальный кабель, кварцевые генераторы и конденсаторы (керамические, пленочные, электролитические), за счёт заключения дистрибьюторских договоров*

*Мы предлагаем:*

- *Конкурентоспособные цены и скидки постоянным клиентам.*
- *Специальные условия для постоянных клиентов.*
- *Подбор аналогов.*
- *Поставку компонентов в любых объемах, удовлетворяющих вашим потребностям.*

- *Приемлемые сроки поставки, возможна ускоренная поставка.*
- *Доставку товара в любую точку России и стран СНГ.*
- *Комплексную поставку.*
- *Работу по проектам и поставку образцов.*
- *Формирование склада под заказчика.*

- *Сертификаты соответствия на поставляемую продукцию (по желанию клиента).*
- *Тестирование поставляемой продукции.*
- *Поставку компонентов, требующих военную и космическую приемку.*
- *Входной контроль качества.*
- *Наличие сертификата ISO.*

*В составе нашей компании организован Конструкторский отдел, призванный помогать разработчикам, и инженерам.*

*Конструкторский отдел помогает осуществить:*

- *Регистрацию проекта у производителя компонентов.*
- *Техническую поддержку проекта.*
- *Защиту от снятия компонента с производства.*
- *Оценку стоимости проекта по компонентам.*
- *Изготовление тестовой платы монтаж и пусконаладочные работы.*

*Тел: +7 (812) 336 43 04 (многоканальный)*
*Email: org@lifeelectronics.ru*

***www.lifeelectronics.ru***