Data Sheet
FlatPAC™
50 to 600 Watts Autoranging AC-DC Switchers

Features

- RoHS compliant (VE versions)
- Microcontroller architecture
- Inputs: 115/230 Vac autoranging
- Meets FCC Part 15, EN55022, Class B conducted emissions
- 80 – 90% efficiency
- Any output: 1 to 95 Vdc
- Module enable/disable (except LU series)
- UL, TÜV, CE marked
- Remote sense and current limit
- BUS OK and AC OK (except LU series)
- 40 ms ride-through time
- OVP and thermal shutdown
- 1 output; up to 200 W
- 1 or 2 outputs; up to 400 W
- 1, 2, or 3 outputs; up to 600 W

Product Highlights

If you're looking for the convenience of a complete, low profile, agency-approved switching power supply, look no further. The FlatPAC combines Vicor's workhorse VI-200 family of DC-DC converters with a modular package and front-end subassembly to provide from 50 to 600 W of output power from one to three outputs.

A flat plate heat sink for use in conduction cooled applications may be specified as an alternate to the standard finned version by adding "CC" to the end of the model number.

Vicor's FlatPAC is also available with a current controlled output using BatMod converter modules of 12, 24, or 48 Vdc outputs. This option is specified by appending "BM" or "BC" (for conduction cooled versions) to the end of the FlatPAC model number.

Mixing VI-200 and BatMods in a single FlatPAC is not permissible.

The FlatPAC's contemporary design allows us to configure your order quickly and provide rapid turnaround on standard models. It is truly a complete power solution, enabling you to spend more time designing your system and less time worrying about how to power it.

Configuration Chart

Typical Model: VI-RU 0 1 1 - E U U U - ⁝⁝ ⁝⁝

Input	Output	Input Characteristics
115/230 Vac	**1:** 5 Vdc at 200 W **2:** 12 Vdc at 200 W **3:** 12 Vdc at 200 W	**90–132/180–264 Vac** **U** = Autoranging

Substitute VE– for VI– for RoHS compliant versions

Configuration	Total Power	# of Converters	Dimensions
Single Output			
VI-LU • - •· ·•	50 – 200 W	1	9.25" x 2.5" x 1.37" (234,8 x 124,5 x 34,8 mm)
VI-MU • - •· ⁝⁝	200 – 400 W	2	9.25" x 4.9" x 1.37" (234,8 x 124,5 x 34,8 mm)
VI-NU • - •· ⁝·	300 – 600 W	3	9.25" x 7.3" x 1.37" (234,8 x 185,4 x 34,8 mm)
Dual Output			
VI-PU • • - ·• ⁝· ··	100 – 400 W	2	9.25" x 4.9" x 1.37" (234,8 x 124,5 x 34,8 mm)
VI-QU • • - ·• ⁝⁝ ··	150 – 600 W	3	9.25" x 7.3" x 1.37" (234,8 x 185,4 x 34,8 mm)
Triple Output			
VI-RU • • • - ·• ·· ·· ··	150 – 600 W	3	9.25" x 7.3" 1.37" (234,8 x 185,4 x 34,8 mm)

• Output Voltage

Z = 2 V	**W** = 5.5 V	**M** = 10 V	**N** = 18.5 V	**K** = 40 V	**D** = 85 V
Y = 3.3 V	**V** = 5.8 V	**1** = 12 V	**3** = 24 V	**4** = 48 V	**B** = 95 V
0 = 5 V	**T** = 6.5 V	**P** = 13.8 V	**L** = 28 V	**H** = 52 V	
X = 5.2 V	**R** = 7.5 V	**2** = 15 V	**J** = 36 V	**F** = 72 V	

·• Product Grade Temps. °C

Grade	Operating	Storage
E =	0 to +85	–20 to +100
C =	0 to +85	–20 to +100
I =	–30 to +85	–55 to +100

Temperatures apply to product case.

·· Output Power/Current

VOUT ≥5 V	VOUT < 5 V
Y = 50 W	**Y** = 10 A
X = 75 W	**X** = 15 A
W = 100 W	**W** = 20 A
V = 150 W	**V** = 30 A
U = 200 W	**U** = 40 A

⁝⁝ Output Power/Current

VOUT ≥5 V	VOUT < 5 V
W = 100 W	**W** = 20 A
V = 150 W	**V** = 30 A
U = 200 W	**U** = 40 A
S = 300 W	**S** = 60 A
Q = 400 W	**Q** = 80 A

⁝· Output Power/Current

VOUT ≥5 V	VOUT < 5 V
S = 300 W	**S** = 60 A
P = 450 W	**P** = 90 A
M = 600 W	**M** = 120 A

⁝⁝ Options

BC = BatMod/Conduction Cooled **BM** = BatMod **CC** = Conduction Cooled

Set your site on VICOR at vicorpower.com

SPECIFICATIONS

(typical at 25°C, nominal line and 75% load, unless otherwise specified)

■ INPUT SPECIFICATIONS

Parameter	Min	Typ	Max	Unit	Notes
AC line input					
Autoranging		90 – 132/180 – 264		Vac	
Line frequency		47 – 63		Hz	(C-Grade and E-Grade)
		47 – 440		Hz	(I-Grade)
Inrush current: 115 Vac operation:					
1 converter		16		A	@ peak line
2 converters		23		A	@ peak line
3 converters		39		A	@ peak line
Inrush current: 230 Vac operation					
1 converter		32		A	@ peak line
2 converters		47		A	@ peak line
3 converters		78		A	@ peak line
Ride-through time (full load)					
90/180 Vac low line		5		ms	minimum
115/230 Vac nominal line		40		ms	minimum
AC fail warning time		5		ms	minimum (low line, full load)
AC and BUS OK (2 and 3 converter models only)					
Off state – Vce			70	V	
On state – Vcesat			0.4	V	@ 1 mA (1.5 mA max.)
Module disable (2 and 3 converter models only, optically isolated LED input)					
Continuous forward current		1 – 30		mA	
Forward voltage			1.65	V	@ 30 mA
Dielectric withstand					
Primary to chassis GND		2,121		Vdc	
Primary to secondary		4,242		Vdc	
Secondary to chassis GND		707		Vdc	

■ OUTPUT SPECIFICATIONS

	E-Grade			C-, I-Grade				
Parameter	Min	Typ	Max	Min	Typ	Max	Unit	Notes
Set point accuracy		1%	2%		0.5%	1%	V_{NOM}	
Load/line regulation			0.5%		0.05%	0.2%	V_{NOM}	LL to HL, 10% to Full Load
			1%		0.2%	0.5%	V_{NOM}	LL to HL, No Load to full load
Output temperature drift		0.02			0.01	0.02	%/°C	Over rated temperature
Long term drift		0.02			0.02		%/1 k hours	
Output ripple								
2 V			150 mV		60 mV	100 mV	p-p	20 MHz bandwidth
5 V			5%		2%	3%	p-p	20 MHz bandwidth
10 – 48 V			3%		0.75%	1.5%	p-p	20 MHz bandwidth
Output voltage trimming[1]	50%		110%	50%		110%		
Total remote sense compensation	0.5			0.5			Volts	0.25 V max. neg. leg
OVP set point		125%		115%	125%	135%	V_{NOM}	Recycle power
Current limit	105%		135%	105%		125%	I_{NOM}	Automatic restart
Short circuit current[2]	20%		140%	20%		130%	I_{NOM}	

Set your site on VICOR at vicorpower.com

THERMAL CHARACTERISTICS

	E-Grade			C-, I- Grade				
Parameter	**Min**	**Typ**	**Max**	**Min**	**Typ**	**Max**	**Units**	**Test Conditions**
Efficiency		78 – 88%			80 – 90%			@5 V and higher
Shut down temp. — case	90	95	105	90	95	105	°C	Cool and recycle power to restart
Operating temp. — case			85			85	°C	See Thermal Curves

MECHANICAL SPECIFICATIONS

	E-Grade			C-, I- Grade				
Parameter	**Min**	**Typ**	**Max**	**Min**	**Typ**	**Max**	**Units**	**Test Conditions**
Weight[3]		22.4 (652)			22.4 (652)		Ounces (Grams)	

AGENCY APPROVALS

Safety Standards	Markings	Notes
UL1604, UL60950-1	cURus	
UL / CSA / EN / IEC 60950-1	cTÜVus, CE Mark	Low Voltage Directive (73/23/EEC)

EMI / EMC Characteristics (Performed on selected samples representative of the U Series FlatPac product family.)

Parameter	Notes
Conducted emissions, LISN	EN 55022 and FCC R&R, Part 15, Subpart B, Class B
Radiated emissions, 10 meters	EN 55022; 1998 and FCC R&R, Part 15, Subpart B, Class A
Electrostatic discharge	IEC 61000-4-2: 1995, Level 4; ±8 kV Contact, ± 15 kV Air Discharge
RF radiated immunity, E-field	IEC 61000-4-3: 1997; 80 MHz to 1.0 GHz, 3 V/M, CW
Electrical fast transients/burst	EN 61000-4-4: 1995, Level 3; ±2 kV,
Surge immunity	EN 61000-4-5: 1996 Class 3; ±2 kV Line to Ground, ±1 kV Line to Line
RF conducted immunity	IEC 61000-4-6: 1996, class 3, 10 Vrms, 150 kHz to 80 MHz
Power frequency magnetic field immunity	IEC 61000-4-8: 1994, 30 to 300 A/M, 50Hz
Voltage dips and interrupts	IEC 61000-4-11: 1994

[1] 10 V, 12 V and 15 V outputs, trim range ± 10%. Consult factory for wider trim range.
[2] Output voltages of 5 V or less incorporate foldback current limiting, outputs greater than 5 V incorporate straight line current limiting.
[3] For MU, PU series, multiply value by 2; for NU, QU, RU series, multiply value by 3.

Set your site on VICOR at vicorpower.com

THERMAL CURVES

FREE AIR — 50 LFM — 100 LFM — 250 LFM — 500 LFM — 750 LFM — 1000 LFM

5 V Output

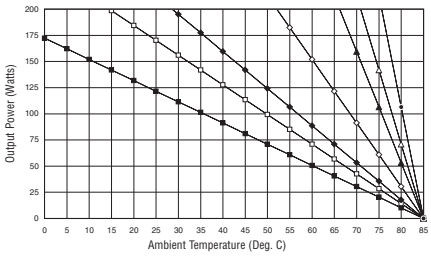

LU Series

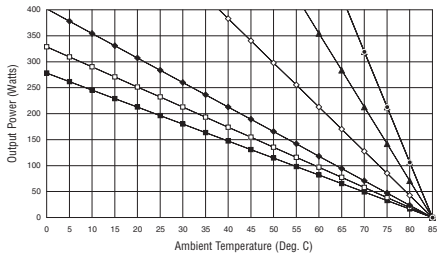

MU, PU Series

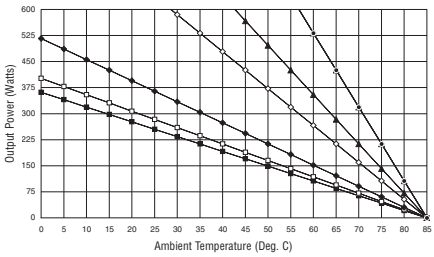

NU, QU, RU Series

10 to 48 V Output

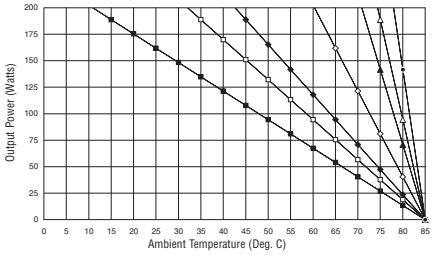

LU Series

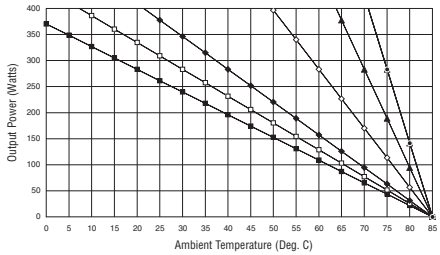

MU, PU Series

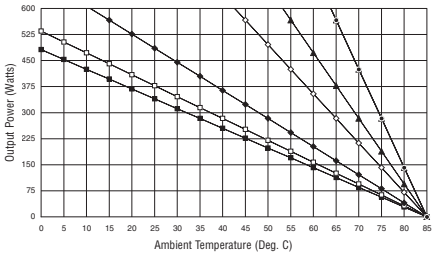

NU, QU, RU Series

APPLICATION CIRCUITS

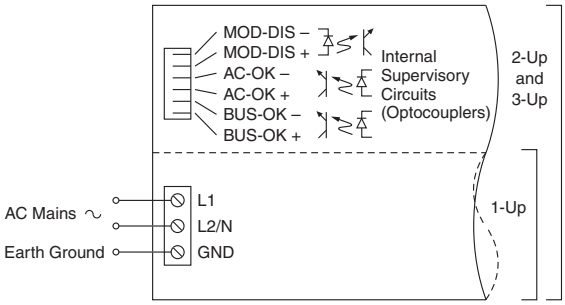

AC Mains Connections

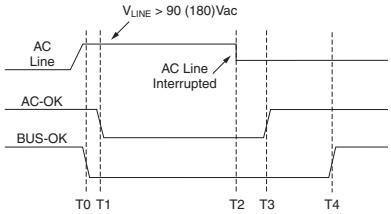

Conditions: Full Load 90 (180)Vac, AC Line

Time Interval	Min	Typ	Max	Units	Notes
T0-T1	0	0.1	1.0	ms	
T2-T3	0	40	–	ms	Ride-through time
T2-T4	5	–	–	ms	Hold-up time
T3-T4	5	–	–	ms	AC fail warning time

Power Up and Power Down Sequencing

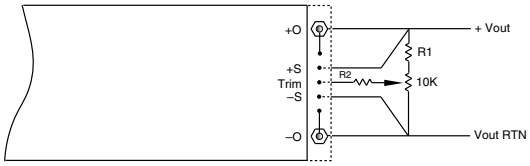

Resistor Values for Trimming Standard Output Voltages

Nom. Output Voltage	5 V	12 V	15 V	24 V	28 V	48 V	Trim Range
R1(kΩ)	0.953	15.8	22.1	41.2	48.7	90.9	+10%, -10%
R2(kΩ)	90	90	90	90	90	90	

Output Trimming

Set your site on VICOR at vicorpower.com

MECHANICAL DRAWINGS

Inputs

1 MOD DIS–
2 MOD DIS+
3 AC OK–
4 AC OK+
5 BUS OK–
6 BUS OK+

Input connector, Amp P/N 644488-6; mating connector, MTA-100 IDC Series

7 AC IN L1
8 AC IN L2/N
9 CHASSIS GND

Terminals for #16-12 AWG wire

Outputs

10 +OUT (#10-32 Stud)
11 +OUT
12 +SENSE (V_{TRIM}*)
13 TRIM (I_{TRIM}*)
14 –SENSE (I_{MON}*)
15 –OUT
16 –OUT (#10-32 Stud)

Output connector, Amp P/N 644486-5; mating connector, MTA-100 IDC Series

*On FlatPACs with BatMODs only.

STANDARD MODELS

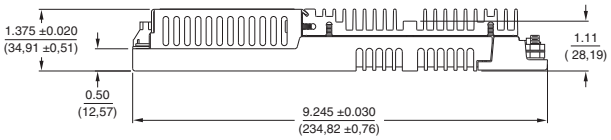

CONDUCTION COOLED MODELS "–CC"

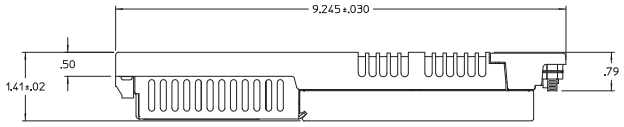

LU SERIES

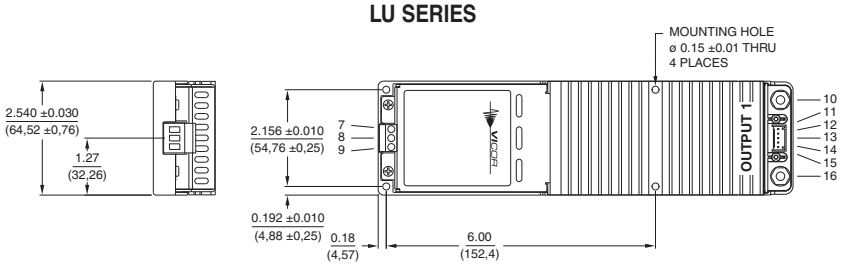

MU SERIES

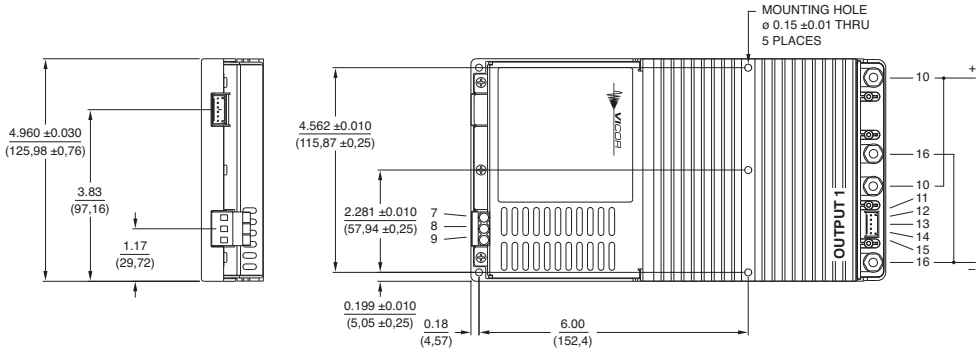

PU SERIES

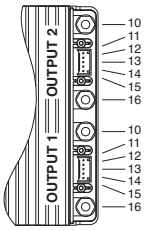

NU SERIES

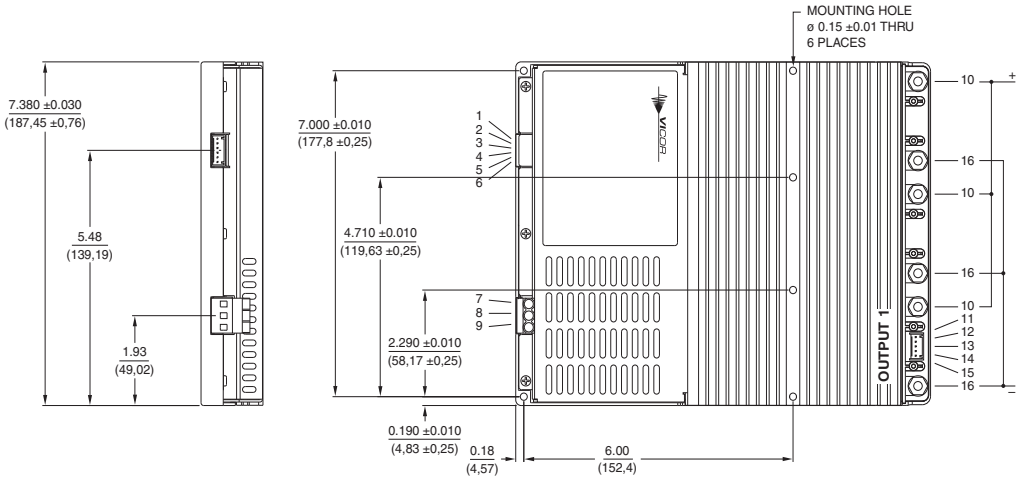

QU SERIES

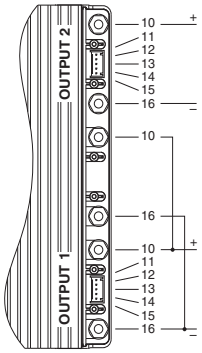

RU SERIES

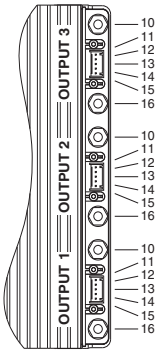

Set your site on VICOR at vicorpower.com

Warranty

Vicor products are guaranteed for two years from date of shipment against defects in material or workmanship when in normal use and service. This warranty does not extend to products subjected to misuse, accident, or improper application or maintenance. Vicor shall not be liable for collateral or consequential damage. This warranty is extended to the original purchaser only.

EXCEPT FOR THE FOREGOING EXPRESS WARRANTY, VICOR MAKES NO WARRANTY, EXPRESS OR IMPLIED, INCLUDING, BUT NOT LIMITED TO, THE WARRANTY OF MERCHANTABILITY OR FITNESS FOR A PARTICULAR PURPOSE.

Vicor will repair or replace defective products in accordance with its own best judgement. For service under this warranty, the buyer must contact Vicor to obtain a Return Material Authorization (RMA) number and shipping instructions. Products returned without prior authorization will be returned to the buyer. The buyer will pay all charges incurred in returning the product to the factory. Vicor will pay all reshipment charges if the product was defective within the terms of this warranty.

Information published by Vicor has been carefully checked and is believed to be accurate; however, no responsibility is assumed for inaccuracies. Vicor reserves the right to make changes to any products without further notice to improve reliability, function, or design. Vicor does not assume any liability arising out of the application or use of any product or circuit; neither does it convey any license under its patent rights nor the rights of others. Vicor general policy does not recommend the use of its components in life support applications wherein a failure or malfunction may directly threaten life or injury. Per Vicor Terms and Conditions of Sale, the user of Vicor components in life support applications assumes all risks of such use and indemnifies Vicor against all damages.

Vicor's comprehensive line of power solutions includes high density AC-DC and DC-DC modules and accessory components, fully configurable AC-DC and DC-DC power supplies, and complete custom power systems.

Information furnished by Vicor is believed to be accurate and reliable. However, no responsibility is assumed by Vicor for its use. Vicor components are not designed to be used in applications, such as life support systems, wherein a failure or malfunction could result in injury or death. All sales are subject to Vicor's Terms and Conditions of Sale, which are available upon request.

Specifications are subject to change without notice.

Intellectual Property Notice

Vicor and its subsidiaries own Intellectual Property (including issued U.S. and Foreign Patents and pending patent applications) relating to the products described in this data sheet. Interested parties should contact Vicor's Intellectual Property Department.

Vicor Corporation
25 Frontage Road
Andover, MA, USA 01810
Tel: 800-735-6200
Fax: 978-475-6715

email
Customer Service: custserv@vicorpower.com
Technical Support: apps@vicorpower.com

Set your site on VICOR at vicorpower.com

ООО «ЛайфЭлектроникс» “LifeElectronics” LLC

ИНН 7805602321 КПП 780501001 Р/С 40702810122510004610 ФАКБ "АБСОЛЮТ БАНК" (ЗАО) в г.Санкт-Петербурге К/С 30101810900000000703 БИК 044030703

Компания «Life Electronics» занимается поставками электронных компонентов импортного и отечественного производства от производителей и со складов крупных дистрибьюторов Европы, Америки и Азии.

С конца 2013 года компания активно расширяет линейку поставок компонентов по направлению коаксиальный кабель, кварцевые генераторы и конденсаторы (керамические, пленочные, электролитические), за счёт заключения дистрибьюторских договоров

Мы предлагаем:

- *Конкурентоспособные цены и скидки постоянным клиентам.*
- *Специальные условия для постоянных клиентов.*
- *Подбор аналогов.*
- *Поставку компонентов в любых объемах, удовлетворяющих вашим потребностям.*

- *Приемлемые сроки поставки, возможна ускоренная поставка.*
- *Доставку товара в любую точку России и стран СНГ.*
- *Комплексную поставку.*
- *Работу по проектам и поставку образцов.*
- *Формирование склада под заказчика.*

- *Сертификаты соответствия на поставляемую продукцию (по желанию клиента).*
- *Тестирование поставляемой продукции.*
- *Поставку компонентов, требующих военную и космическую приемку.*
- *Входной контроль качества.*
- *Наличие сертификата ISO.*

В составе нашей компании организован Конструкторский отдел, призванный помогать разработчикам, и инженерам.

Конструкторский отдел помогает осуществить:

- *Регистрацию проекта у производителя компонентов.*
- *Техническую поддержку проекта.*
- *Защиту от снятия компонента с производства.*
- *Оценку стоимости проекта по компонентам.*
- *Изготовление тестовой платы монтаж и пусконаладочные работы.*

Тел: +7 (812) 336 43 04 (многоканальный)
Email: org@lifeelectronics.ru

www.lifeelectronics.ru