molex
one company › a world of innovation

This document was generated on 05/24/2010

PLEASE CHECK WWW.MOLEX.COM FOR LATEST PART INFORMATION

Part Number: 0432550059

Status: Active

Overview: mlx

Description: 6.35mm (.250") Pitch MLX™ Power Connector Header, Vertical, with Plastic Polarizing Peg, 2 Circuits, Polyester 94V-0, Tin (Sn) Plating, White

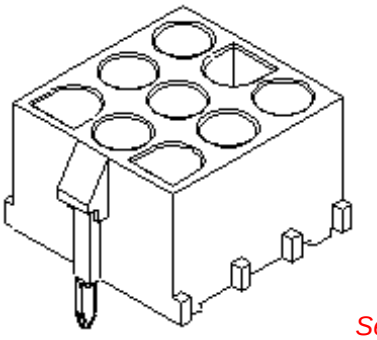

Series image - Reference only

Documents:

3D Model
Drawing (PDF)
Product Specification PSX-42002-0001 (PDF)
RoHS Certificate of Compliance (PDF)

Agency Certification

CSA	LR19980
UL	E29179

General

Product Family	PCB Headers
Series	43255
Application	Wire-to-Board
Comments	High Vibration Application
Overview	mlx
Product Name	MLX™

Physical

Breakaway	No
Circuits (Loaded)	2
Circuits (maximum)	2
Color - Resin	Natural
Durability (mating cycles max)	50
First Mate / Last Break	No
Flammability	94V-2
Glow-Wire Compliant	No
Guide to Mating Part	Yes
Keying to Mating Part	Yes
Lock to Mating Part	Yes
Mated Height (in)	0.400 In
Mated Height (mm)	10.16 mm
Material - Metal	Phosphor Bronze
Material - Plating Mating	Tin
Material - Plating Termination	Tin
Material - Resin	Polyester
Number of Rows	1
Orientation	Vertical
PC Tail Length (in)	0.169 In
PC Tail Length (mm)	4.30 mm
PCB Locator	Yes
PCB Retention	Yes
PCB Thickness Recommended (in)	0.062 In
PCB Thickness Recommended (mm)	1.60 mm
Packaging Type	Bag
Pitch - Mating Interface (in)	0.250 In
Pitch - Mating Interface (mm)	6.35 mm
Pitch - Term. Interface (in)	0.250 In
Pitch - Term. Interface (mm)	6.35 mm
Plating min: Mating (µin)	140
Plating min: Mating (µm)	3.5
Polarized to Mating Part	Yes

EU RoHS
ELV and RoHS Compliant

China RoHS

REACH SVHC
Contains SVHC: No

Halogen-Free Status
Not Reviewed

Need more information on product environmental compliance?

Email productcompliance@molex.com
For a multiple part number RoHS Certificate of Compliance, click here

Please visit the Contact Us section for any non-product compliance questions.

Search Parts in this Series
43255Series

Mates With
42021 MLX™ Power Crimp Housing Plug. 42023 MLX Crimp Terminal. 42024 MLX Crimp Terminal

Polarized to PCB	Yes
Shrouded	Fully
Stackable	No
Surface Mount Compatible (SMC)	No
Temperature Range - Operating	-55°C to +105°C
Termination Interface: Style	Through Hole

Electrical

Current - Maximum per Contact	12A
Voltage - Maximum	600V

Solder Process Data

Duration at Max. Process Temperature (seconds)	10
Lead-free Process Capability	Wave Capable (TH only)
Process Temperature max. C	260

Material Info

Reference - Drawing Numbers

Packaging Specification	PK-43255-001
Product Specification	PSX-42002-0001
Sales Drawing	SDA-43255-00**

This document was generated on 05/24/2010

PLEASE CHECK WWW.MOLEX.COM FOR LATEST PART INFORMATION

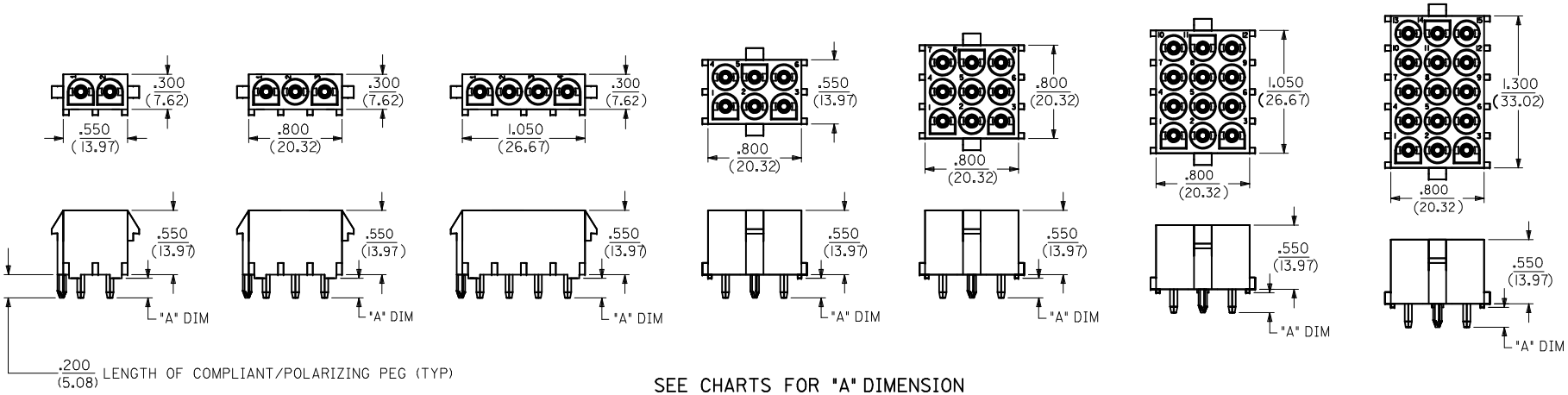

SEE CHARTS FOR "A" DIMENSION

(THE "A" DIMENSION APPLIES TO THE LENGTH OF THE TERMINAL ONLY)

P.C. BOARD MOUNTING DIMENSIONS

2, 3, & 4 POSITION HEADER ASSEMBLIES

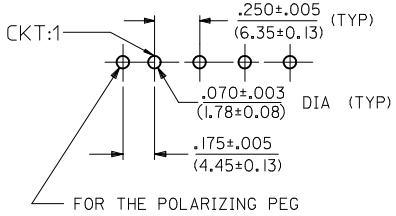

6, 9, 12 & 15 POSITION HEADER ASSEMBLIES

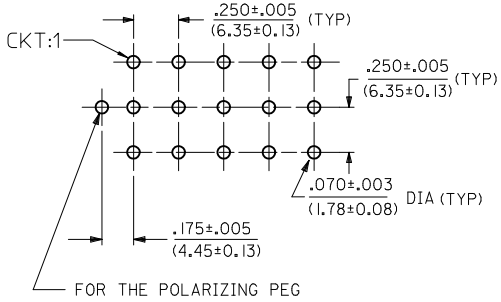

NOTES:

1) MATERIAL CODES:
   "A"= UNREINFORCED POLYESTER, 94V-0. COLOR: WHITE
   "C"= NYLON (PA66), UL94V-2. COLOR: NATURAL-TRANSLUCENT
   "D"= NYLON, V-2, COLOUR: BLACK (ZYTEL 101F)
   "E"= PA6, SCHULAMID V-2 GRADE, CTI=325V,
   GLOW WIRE COMPATIBLE
   COLOUR: NATURAL-WHITE
2) PLATING CODES:
   "A" = TIN 140 m.I(3.50 MICRONS) TO 240 m.I (6.00 MICRONS)
3) TERMINAL LENGTH CODES:
   I= TERMINAL FOR .062/(1.57) THICK PC BOARD
4) DIMENSIONS ARE FOR REFERENCE ONLY UNLESS INDICATED OTHERWISE.
5) HEADER ASSEMBLY HOUSINGS MATE WITH :
   - PLUG HOUSINGS, .084/(2.13) DIA. SERIES: (42021-**)
6) CONTACTS ARE ON .250/(6.35) GRID CENTERLINESPACING.
7) PACKAGING SPECIFICATION:
   'A' - PK-43255-001, PK-43255-002, PK-43255-003
   'B' - PK-36518-292

RoHS COMPLIANT

ENTER DESCRIPTION EC NO: 12010-0191 DRWN:HMR01 2009/12/31 CHKD:KPRASAD 2010/01/05 APPR:KPRASAD 2010/01/13 DESCRIPTION REV E2	QUALITY SYMBOLS ▼=0 Ⓒ=0	GENERAL TOLERANCES (UNLESS SPECIFIED) mm / INCH 4 PLACES ± --- / ± --- 3 PLACES ± --- / ± 0.005 2 PLACES ± 0.13 / ± 0.01 1 PLACE ± 0.25 / ± --- ANGULAR ±1/2° DRAFT WHERE APPLICABLE MUST REMAIN WITHIN DIMENSIONS	DIMENSION STYLE IN/MM DRAWN BY SUDHIR DATE 2004/06/08 CHECKED BY GJLOWE DATE 2004/06/08 APPROVED BY GJLOWE DATE 2004/06/08 MATERIAL NO. SEE CHART SIZE A2	SCALE 1:1 DESIGN UNITS INCH THIRD ANGLE PROJECTION TITLE HEADER HOUSING ASSEMBLY .084/(2.13) SERIES COMPLIANT-POLARIZING PEG molex MOLEX INCORPORATED DOCUMENT NO. SDA-43255-00**	SHEET NO. 1 OF 2	THIS DRAWING CONTAINS INFORMATION THAT IS PROPRIETARY TO MOLEX INCORPORATED AND SHOULD NOT BE USED WITHOUT WRITTEN PERMISSION

tb_frame_A2_P_AM_T
Rev. E 2006/04/15

ITEM NO.	CIRCUIT SIZE	MATERIAL COLOR (SEE NOTE 1)	PIN (1) OR SOCKET (2) TERMINALS	TERMINAL PLATING (SEE NOTE 2)	TERMINAL LENGTH (SEE NOTE 3)	"A" DIM ±.015	PACKAGING (SEE NOTE 7)
43255-0003	2	A	2	A	1	.17/(4.3)	A
43255-0059		A	1	A	1		A
43255-0113		C	1	A	1		A
43255-0115		C	2	A	1		A
36759-0021		D	1	A	1		A
36759-0061		D	2	A	1		A
36757-0021		E	1	A	1		A
36757-0061		E	2	A	1		A
43255-0011	3	A	2	A	1	.17/(4.3)	A
43255-0067		A	1	A	1		A
43255-0121		C	1	A	1		A
43255-0123		C	2	A	1		A
36759-0022		D	1	A	1		A
36759-0062		D	2	A	1		A
36757-0022		E	1	A	1		A
36757-0062		E	2	A	1		A
43255-0019	4	A	2	A	1	.17/(4.3)	A
43255-0075		A	1	A	1		A
43255-0129		C	1	A	1		A
43255-0131		C	2	A	1		A
36759-0023		D	1	A	1		A
36759-0063		D	2	A	1		A
36757-0023		E	1	A	1		A
36757-0063		E	2	A	1		A
43255-0027	6	A	2	A	1	.17/(4.3)	A
43255-0083		A	1	A	1		A
43255-0137		C	1	A	1		A
43255-0139		C	2	A	1		A
36759-0024		D	1	A	1		A
36759-0064		D	2	A	1		A
36757-0024		E	1	A	1		A
36757-0064		E	2	A	1		A
43255-0035	9	A	2	A	1	.17/(4.3)	A
43255-0091		A	1	A	1		A
43255-0145		C	1	A	1		A
43255-0147		C	2	A	1		A
36759-0025		D	1	A	1		A
36759-0065		D	2	A	1		A
36757-0025		E	1	A	1		A
36757-0065		E	2	A	1		A
43255-0043	12	A	2	A	1	.17/(4.3)	A
43255-0099		A	1	A	1		A
43255-0153		C	1	A	1		A
43255-0155		C	2	A	1		A
36759-0026		D	1	A	1		A
36759-0066		D	2	A	1		A
36757-0026		E	1	A	1		A
36757-0066		E	2	A	1		A
43255-0051	15	A	2	A	1	.17/(4.3)	A
43255-0107		A	1	A	1		A
43255-0161		C	1	A	1		A
43255-0163		C	2	A	1		A
36759-0027		D	1	A	1		A
36759-0067		D	2	A	1		A
36757-0027		E	1	A	1		A
36757-0067		E	2	A	1		A
36766-0001	2	C	1	A	1	.17/(4.3)	B
36766-0002	3	C	1	A	1		B
36766-0003	4	C	1	A	1		B

RoHS COMPLIANT

ENTER DESCRIPTION
EC NO: 12010-0191 2009/12/31
DRWN:HMR01 2010/01/05
CHKD:KPRASAD 2010/01/13
APPR:KPRASAD
DESCRIPTION
REV
E2

QUALITY SYMBOLS
▼=0
(C)=0

GENERAL TOLERANCES (UNLESS SPECIFIED)

	mm	INCH
4 PLACES	±---	±---
3 PLACES	±---	±0.005
2 PLACES	±0.13	±0.01
1 PLACE	±0.25	±---
ANGULAR ±1/2°		

DRAFT WHERE APPLICABLE MUST REMAIN WITHIN DIMENSIONS

DIMENSION STYLE: IN/MM
SCALE
DESIGN UNITS: INCH
THIRD ANGLE PROJECTION

DRAWN BY: SUDHIR DATE: 2004/06/08
CHECKED BY: GJLOWE DATE: 2004/06/08
APPROVED BY: GJLOWE DATE: 2004/06/08

TITLE: HEADER HOUSING ASSEMBLY .084/(2.13) SERIES COMPLIANT-POLARIZING PEG

molex MOLEX INCORPORATED

MATERIAL NO.: SEE CHART
DOCUMENT NO.: SDA-43255-00**
SHEET NO.: 2 OF 2
SIZE: A1

THIS DRAWING CONTAINS INFORMATION THAT IS PROPRIETARY TO MOLEX INCORPORATED AND SHOULD NOT BE USED WITHOUT WRITTEN PERMISSION

ООО «ЛайфЭлектроникс» “LifeElectronics” LLC

ИНН 7805602321 КПП 780501001 Р/С 40702810122510004610 ФАКБ "АБСОЛЮТ БАНК" (ЗАО) в г.Санкт-Петербурге К/С 30101810900000000703 БИК 044030703

Компания «Life Electronics» занимается поставками электронных компонентов импортного и отечественного производства от производителей и со складов крупных дистрибьюторов Европы, Америки и Азии.

С конца 2013 года компания активно расширяет линейку поставок компонентов по направлению коаксиальный кабель, кварцевые генераторы и конденсаторы (керамические, пленочные, электролитические), за счёт заключения дистрибьюторских договоров

Мы предлагаем:

- *Конкурентоспособные цены и скидки постоянным клиентам.*
- *Специальные условия для постоянных клиентов.*
- *Подбор аналогов.*
- *Поставку компонентов в любых объемах, удовлетворяющих вашим потребностям.*

- *Приемлемые сроки поставки, возможна ускоренная поставка.*
- *Доставку товара в любую точку России и стран СНГ.*
- *Комплексную поставку.*
- *Работу по проектам и поставку образцов.*
- *Формирование склада под заказчика.*

- *Сертификаты соответствия на поставляемую продукцию (по желанию клиента).*
- *Тестирование поставляемой продукции.*
- *Поставку компонентов, требующих военную и космическую приемку.*
- *Входной контроль качества.*
- *Наличие сертификата ISO.*

В составе нашей компании организован Конструкторский отдел, призванный помогать разработчикам, и инженерам.

Конструкторский отдел помогает осуществить:

- *Регистрацию проекта у производителя компонентов.*
- *Техническую поддержку проекта.*
- *Защиту от снятия компонента с производства.*
- *Оценку стоимости проекта по компонентам.*
- *Изготовление тестовой платы монтаж и пусконаладочные работы.*

Тел: +7 (812) 336 43 04 (многоканальный)
Email: org@lifeelectronics.ru

www.lifeelectronics.ru