Hyperfast Rectifier, 2 x 10 A FRED Pt™

20CTH03 **20CTH03FP**

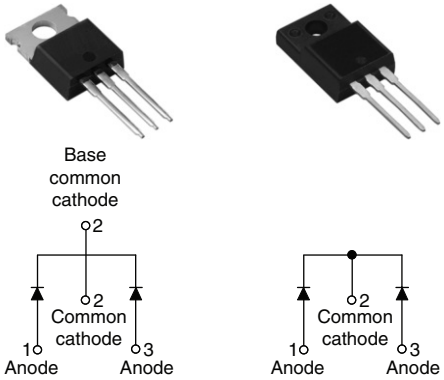

TO-220AB **TO-220 FULL-PAK**

FEATURES

- Hyperfast recovery time
- Low forward voltage drop
- Low leakage current
- 175 °C operating junction temperature
- Fully isolated package (V_{INS} = 2500 V_{RMS})
- TO-220 designed and qualified for AEC Q101 level
- TO-220FP designed and qualified for industrial level

DESCRIPTION/APPLICATIONS

300 V series are the state of the art hyperfast recovery rectifiers designed with optimized performance of forward voltage drop and hyperfast recovery time.
The planar structure and the platinum doped life time control, guarantee the best overall performance, ruggedness and reliability characteristics.
These devices are intended for use in the output rectification stage of SMPS, UPS, dc-to-dc converters as well as freewheeling diodes in low voltage inverters and chopper motor drives.
Their extremely optimized stored charge and low recovery current minimize the switching losses and reduce over dissipation in the switching element and snubbers.

PRODUCT SUMMARY	
t_{rr} (maximum)	35 ns
$I_{F(AV)}$	2 x 10 A
V_R	300 V

ABSOLUTE MAXIMUM RATINGS					
PARAMETER		SYMBOL	TEST CONDITIONS	VALUES	UNITS
Peak repetitive reverse voltage		V_{RRM}		300	V
Average rectified forward current	per diode	$I_{F(AV)}$	T_C = 160 °C	10	A
	(FULL-PAK) per diode		T_C = 135 °C		
	per device			20	
Non-repetitive peak surge current		I_{FSM}	T_J = 25 °C	120	
Operating junction and storage temperatures		T_J, T_{Stg}		- 65 to 175	°C

ELECTRICAL SPECIFICATIONS (T_J = 25 °C unless otherwise specified)						
PARAMETER	SYMBOL	TEST CONDITIONS	MIN.	TYP.	MAX.	UNITS
Breakdown voltage, blocking voltage	V_{BR}, V_R	I_R = 100 µA	300	-	-	V
Forward voltage	V_F	I_F = 10 A	-	1.05	1.25	
		I_F = 10 A, T_J = 125 °C	-	0.85	0.95	
Reverse leakage current	I_R	V_R = V_R rated	-	-	20	µA
		T_J = 125 °C, V_R = V_R rated	-	6	200	
Junction capacitance	C_T	V_R = 300 V	-	30	-	pF
Series inductance	L_S	Measured lead to lead 5 mm from package body	-	8	-	nH

DYNAMIC RECOVERY CHARACTERISTICS (T_C = 25 °C unless otherwise specified)							
PARAMETER	SYMBOL	TEST CONDITIONS		MIN.	TYP.	MAX.	UNITS
Reverse recovery time	t_{rr}	I_F = 1 A, dI_F/dt = 50 A/µs, V_R = 30 V		-	-	35	ns
		I_F = 1 A, dI_F/dt = 100 A/µs, V_R = 30 V		-	-	30	
		T_J = 25 °C	I_F = 10 A dI_F/dt = 200 A/µs V_R = 200 V	-	31	-	
		T_J = 125 °C		-	42	-	
Peak recovery current	I_{RRM}	T_J = 25 °C		-	2.4	-	A
		T_J = 125 °C		-	5.6	-	
Reverse recovery charge	Q_{rr}	T_J = 25 °C		-	36	-	nC
		T_J = 125 °C		-	120	-	

THERMAL - MECHANICAL SPECIFICATIONS							
PARAMETER		SYMBOL	TEST CONDTIONS	MIN.	TYP.	MAX.	UNITS
Maximum junction and storage temperature range		T_J, T_{Stg}		- 65	-	175	°C
Thermal resistance, junction to case	per diode	R_{thJC}	Mounting surface, flat, smooth and greased	-	-	1.5	°C/W
	(FULL-PAK) per diode			-	-	3.9	
Marking device			Case style TO-220AB	20CTH03			
			Case style TO-220 FULL-PAK	20CTH03FP			

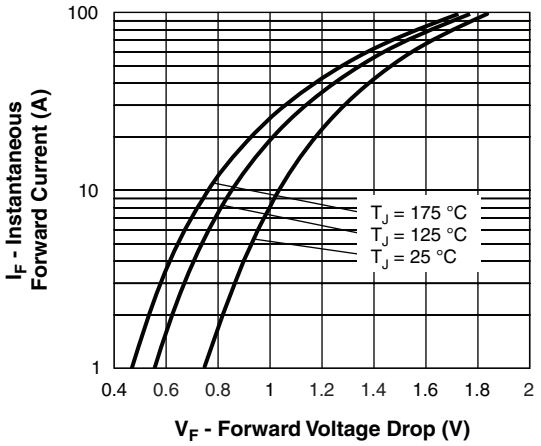

Fig. 1 - Typical Forward Voltage Drop Characteristics

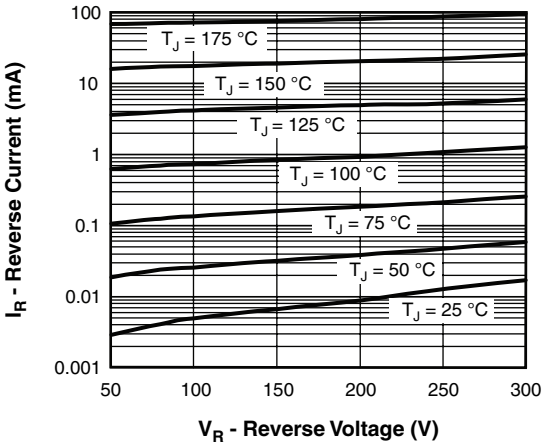

Fig. 2 - Typical Values of Reverse Current vs. Reverse Voltage

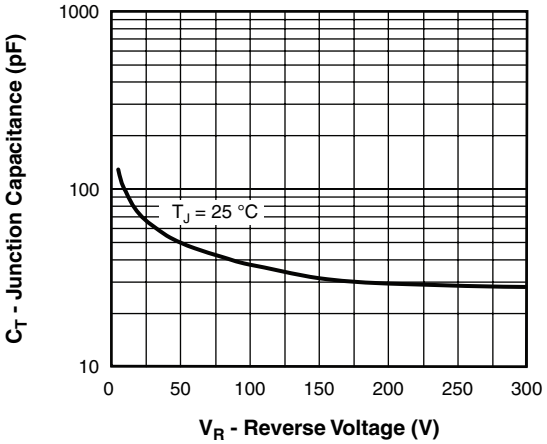

Fig. 3 - Typical Junction Capacitance vs. Reverse Voltage

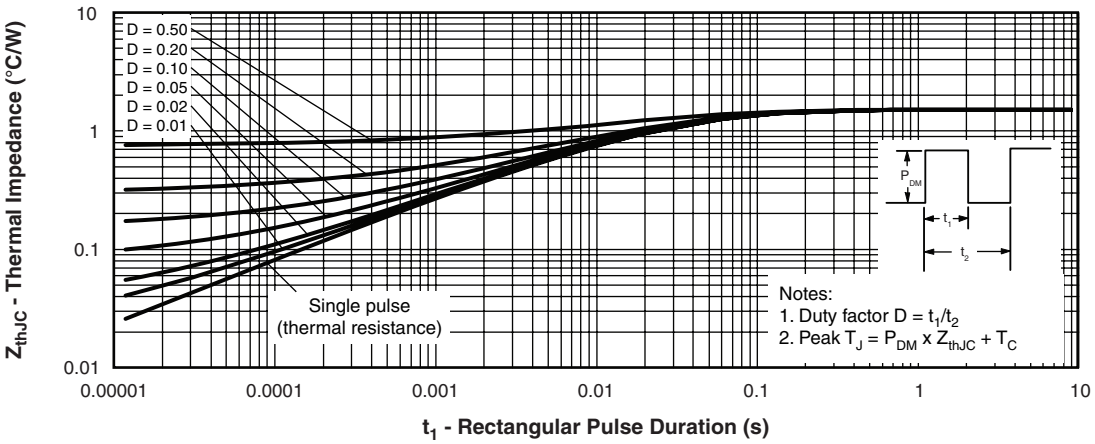

Fig. 4 - Maximum Thermal Impedance Z_{thJC} Characteristics

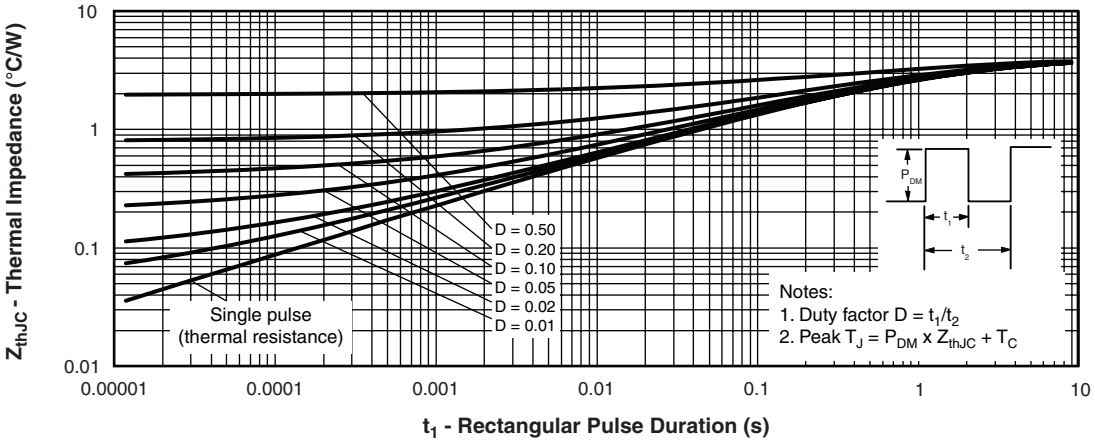

Fig. 5 - Maximum Thermal Impedance Z_{thJC} Characteristics (FULL-PAK)

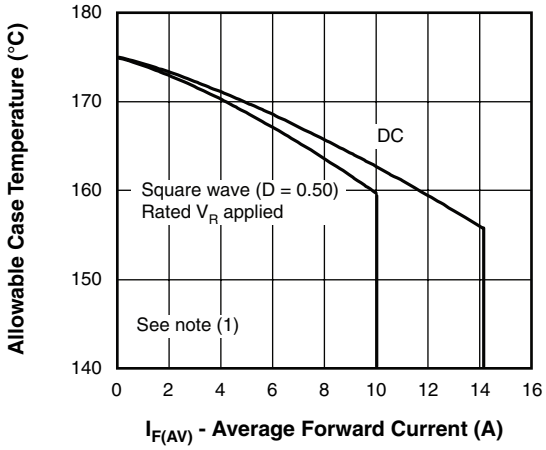

Fig. 6 - Maximum Allowable Case Temperature vs. Average Forward Current

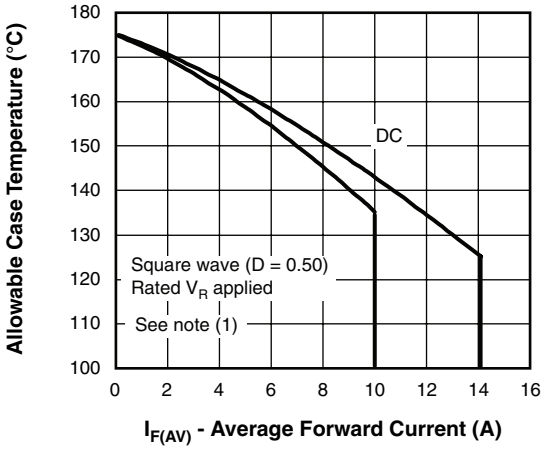

Fig. 7 - Maximum Allowable Case Temperature vs. Average Forward Current (FULL-PAK)

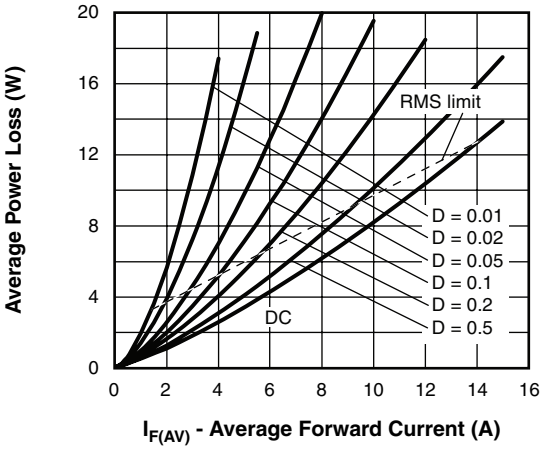

Fig. 8 - Forward Power Loss Characteristics

Note

(1) Formula used: $T_C = T_J - (Pd + Pd_{REV}) \times R_{thJC}$;
Pd = Forward power loss = $I_{F(AV)} \times V_{FM}$ at ($I_{F(AV)}/D$) (see fig. 8);
Pd_{REV} = Inverse power loss = $V_{R1} \times I_R (1 - D)$; I_R at V_{R1} = Rated V_R

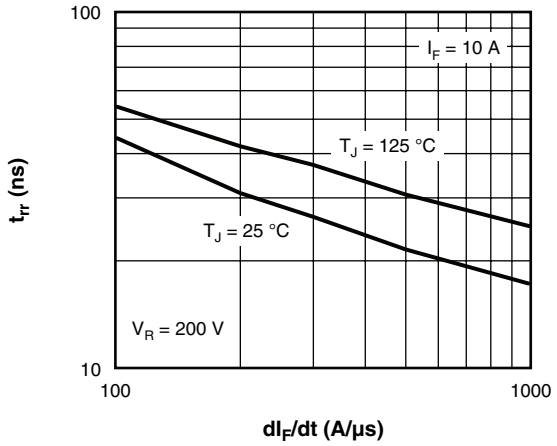

Fig. 9 - Typical Reverse Recovery Time vs. dI_F/dt

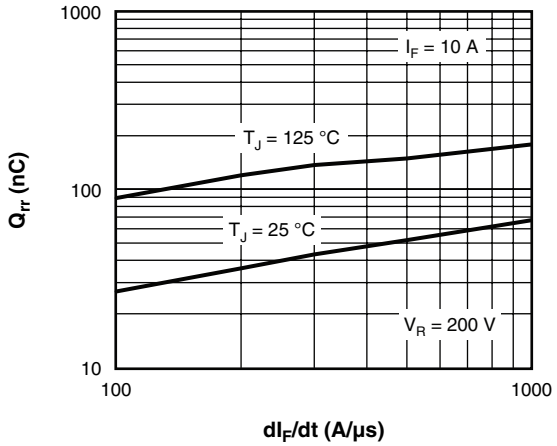

Fig. 10 - Typical Stored Charge vs. dI_F/dt

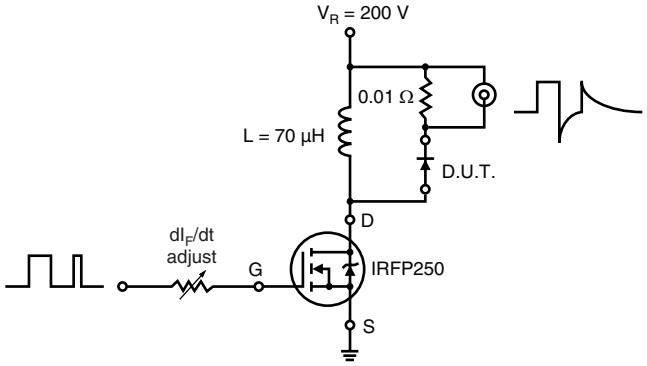

Fig. 11 - Reverse Recovery Parameter Test Circuit

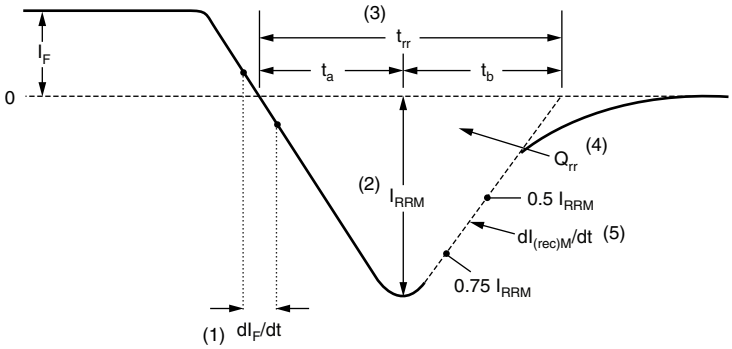

(1) dI_F/dt - rate of change of current through zero crossing

(2) I_{RRM} - peak reverse recovery current

(3) t_{rr} - reverse recovery time measured from zero crossing point of negative going I_F to point where a line passing through 0.75 I_{RRM} and 0.50 I_{RRM} extrapolated to zero current.

(4) Q_{rr} - area under curve defined by t_{rr} and I_{RRM}

$$Q_{rr} = \frac{t_{rr} \times I_{RRM}}{2}$$

(5) $dI_{(rec)M}/dt$ - peak rate of change of current during t_b portion of t_{rr}

Fig. 12 - Reverse Recovery Waveform and Definitions

ORDERING INFORMATION TABLE

Device code

20	C	T	H	03	FP	-
1	2	3	4	5	6	7

1 - Current rating (20 = 20 A)
2 - C = Common cathode
3 - T = TO-220, D^2PAK
4 - H = Hyperfast recovery
5 - Voltage rating (03 = 300 V)
6 - • None = TO-220AB
• FP = TO-220 FULL-PAK
7 - • None = Standard production
• PbF = Lead (Pb)-free

Tube standard pack quantity: 50 pieces

LINKS TO RELATED DOCUMENTS	
Dimensions	http://www.vishay.com/doc?95040
Part marking information	http://www.vishay.com/doc?95042

Disclaimer

All product specifications and data are subject to change without notice.

Vishay Intertechnology, Inc., its affiliates, agents, and employees, and all persons acting on its or their behalf (collectively, “Vishay”), disclaim any and all liability for any errors, inaccuracies or incompleteness contained herein or in any other disclosure relating to any product.

Vishay disclaims any and all liability arising out of the use or application of any product described herein or of any information provided herein to the maximum extent permitted by law. The product specifications do not expand or otherwise modify Vishay’s terms and conditions of purchase, including but not limited to the warranty expressed therein, which apply to these products.

No license, express or implied, by estoppel or otherwise, to any intellectual property rights is granted by this document or by any conduct of Vishay.

The products shown herein are not designed for use in medical, life-saving, or life-sustaining applications unless otherwise expressly indicated. Customers using or selling Vishay products not expressly indicated for use in such applications do so entirely at their own risk and agree to fully indemnify Vishay for any damages arising or resulting from such use or sale. Please contact authorized Vishay personnel to obtain written terms and conditions regarding products designed for such applications.

Product names and markings noted herein may be trademarks of their respective owners.

ООО «ЛайфЭлектроникс» “LifeElectronics” LLC

ИНН 7805602321 КПП 780501001 Р/С 40702810122510004610 ФАКБ "АБСОЛЮТ БАНК" (ЗАО) в г.Санкт-Петербурге К/С 30101810900000000703 БИК 044030703

Компания «Life Electronics» занимается поставками электронных компонентов импортного и отечественного производства от производителей и со складов крупных дистрибьюторов Европы, Америки и Азии.

С конца 2013 года компания активно расширяет линейку поставок компонентов по направлению коаксиальный кабель, кварцевые генераторы и конденсаторы (керамические, пленочные, электролитические), за счёт заключения дистрибьюторских договоров

Мы предлагаем:

- *Конкурентоспособные цены и скидки постоянным клиентам.*
- *Специальные условия для постоянных клиентов.*
- *Подбор аналогов.*
- *Поставку компонентов в любых объемах, удовлетворяющих вашим потребностям.*

- *Приемлемые сроки поставки, возможна ускоренная поставка.*
- *Доставку товара в любую точку России и стран СНГ.*
- *Комплексную поставку.*
- *Работу по проектам и поставку образцов.*
- *Формирование склада под заказчика.*

- *Сертификаты соответствия на поставляемую продукцию (по желанию клиента).*
- *Тестирование поставляемой продукции.*
- *Поставку компонентов, требующих военную и космическую приемку.*
- *Входной контроль качества.*
- *Наличие сертификата ISO.*

В составе нашей компании организован Конструкторский отдел, призванный помогать разработчикам, и инженерам.

Конструкторский отдел помогает осуществить:

- *Регистрацию проекта у производителя компонентов.*
- *Техническую поддержку проекта.*
- *Защиту от снятия компонента с производства.*
- *Оценку стоимости проекта по компонентам.*
- *Изготовление тестовой платы монтаж и пусконаладочные работы.*

Тел: +7 (812) 336 43 04 (многоканальный)
Email: org@lifeelectronics.ru

www.lifeelectronics.ru