RICOH

RN5RF SERIES

LOW RIPPLE VOLTAGE REGULATOR WITH EXTERNAL TRANSISTOR

NO. EA-043-111116

OUTLINE

The RN5RF Series are CMOS-based voltage regulator ICs which control external driver transistors with high ripple rejection, high accuracy output voltage, low supply current. Each of these voltage regulator ICs consists of a voltage reference unit, an error amplifier, output voltage setting resistor, short circuit current limiting circuit and chip enable circuit. These ICs are suitable for constructing regulators with ultra low dropout voltage and an output current in the range of several tens of mA and several hundreds mA. In addition to low supply current by CMOS process, chip enable function can be used to conserve battery life during standby.

Furthermore, a supreme ripple rejection and a transient response are suitable for portable communicator such as cell phones, PDAs, walky talkies. SOT23-5 (Mini Mold) package is available.

FEATURES

- Supply Current ..... Typ. 30μA
- Supply Current (Standby) ..... Typ. 0.1μA
- Output Voltage Accuracy..... ±2%
- Ripple Rejection ..... Typ. 60dB (f=1kHz)
- Dropout Voltage ..... Typ. 0.1V (I_{OUT}=100mA, dependent on External Tr.)
- Temperature-Drift Coefficient of Output Voltage ..... Typ. ± 100ppm/°C
- Line Regulation ..... Typ. 0.05%/V
- Output Voltage Range..... 1.2V to 6.0V (0.1V steps)
  (For other voltages, please refer to MARK INFORMATIONS.)
- Package SOT-23-5
- Current Limit for external Tr. ..... Current limit Typ. 8mA

APPLICATIONS

- Power source for battery-powered equipment
- Power source for hand-held communication equipment, cameras, and VCRs
- Power source for home appliances

BLOCK DIAGRAMS

RN5RFxxA

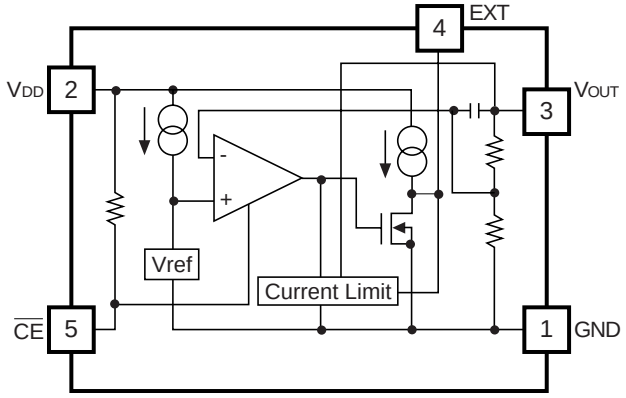

RN5RFxxB

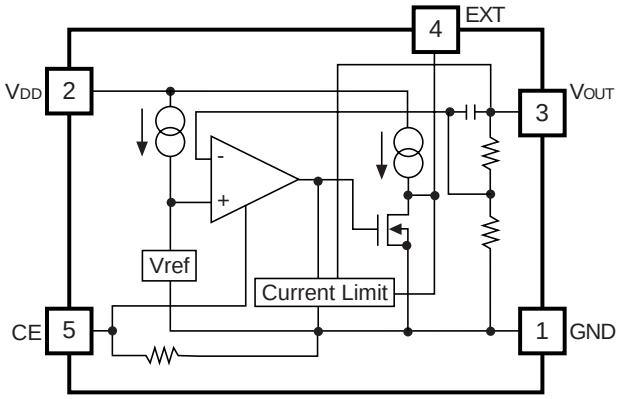

SELECTION GUIDE

The output voltage and CE pin polarity for the ICs can be selected at the user's request.

Product Name	Package	Quantity per Reel	Pb Free	Halogen Free
RN5RFxx∗A-TR-FE	SOT-23-5	3,000 pcs	Yes	Yes

xx: The output voltage can be designated in the range from 1.2V (12) to 6.0V (60) in 0.1V steps.
(For other voltages, please refer to MARK INFORMATIONS.)

∗ : CE pin polarity are options as follows
(A) "L" active
(B) "H" active

PIN CONFIGURATION

● **SOT-23-5**

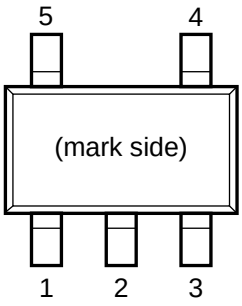

PIN DESCRIPTION

● **SOT-23-5**

Pin No	Symbol	Pin Description
1	GND	Ground Pin
2	V_{DD}	Input Pin
3	V_{OUT}	Output Pin
4	EXT	External Transistor Drive Pin (CMOS Output)
5	$\overline{CE}$ or CE	Chip Enable Pin

ABSOLUTE MAXIMUM RATINGS

Symbol	Item	Rating	Unit
V_{IN}	Input Voltage	12.0	V
V_{CE}	Input Voltage ($\overline{CE}$ or CE)	–0.3 to V_{IN}+0.3	V
V_{EXT}	EXT Output Voltage	–0.3 to V_{IN}+0.3	V
I_{EXT}	EXT Output Current	50	mA
P_D	Power Dissipation* (SOT-23-5)	420	mW
Topt	Operating Temperature Range	–40 to 85	°C
Tstg	Storage Temperature Range	–55 to 125	°C

*) For Power Dissipation, please refer to PACKAGE INFORMATION.

ABSOLUTE MAXIMUM RATINGS

Electronic and mechanical stress momentarily exceeded absolute maximum ratings may cause the permanent damages and may degrade the life time and safety for both device and system using the device in the field.
The functional operation at or over these absolute maximum ratings is not assured.

RECOMMENDED OPERATING CONDITIONS (ELECTRICAL CHARACTERISTICS)

All of electronic equipment should be designed that the mounted semiconductor devices operate within the recommended operating conditions. The semiconductor devices cannot operate normally over the recommended operating conditions, even if when they are used over such conditions by momentary electronic noise or surge. And the semiconductor devices may receive serious damage when they continue to operate over the recommended operating conditions.

ELECTRICAL CHARACTERISTICS

- **RN5RFxxA**

Topt=25°C

Symbol	Item	Conditions	Min.	Typ.	Max.	Unit
V_{OUT}	Output Voltage	V_{IN}-V_{OUT}=1.0V I_{OUT}=50mA	V_{OUT} ×0.98		V_{OUT} ×1.02	V
I_{OUT}	Output Current	V_{IN}-V_{OUT}=1.0V		1.0*1		A
I_{EXT}	EXT Current	V_{IN}=4.0V, V_{EXT}=2.0V	5	8	15	mA
$\Delta V_{OUT}/\Delta I_{OUT}$	Load Regulation	V_{IN}-V_{OUT}=1.0V 1mA≤I_{OUT}≤100mA	-60		60	mV
V_{DIF}	Dropout Voltage	I_{OUT}=100mA, I_{OUT}=0mA		0.1	0.2	V
I_{SS}	Supply Current	V_{IN}-V_{OUT}=1.0V		30	50	μA
Istandby	Standby Current	V_{IN}=10.0V	0.01	0.10	1.00	μA
$I_{EXTleak}$	EXT Leakage Current				0.5	μA
$\Delta V_{OUT}/\Delta V_{IN}$	Line Regulation	I_{OUT}=50mA V_{OUT}+0.5V≤V_{IN}≤10V	0.00	0.05	0.30	%/V
R_R	Ripple Rejection	f=1kHz, sinusoidal 0.5Vp-p V_{IN}-V_{OUT}=1.0V		60		dB
V_{IN}	Input Voltage				10	V
V_{EXT}	EXT Output Voltage				10	V
$\Delta V_{OUT}/\Delta Topt$	Output Voltage Temperature Coefficient	I_{OUT}=10mA -40°C≤Topt≤85°C		±100		ppm/°C
R_{PU}	Pull up resistance for CE pin			4		MΩ
V_{CEH}	$\overline{CE}$ Input Voltage "H"		1.5		V_{IN}	V
V_{CEL}	$\overline{CE}$ Input Voltage "L"		0.00		0.25	V

*1) The output current depends on the performance of external PNP transistor. Use External PNP transistor of a low saturation type, with an h_{FE} between 100 and 300.

*) With respect to Test Circuit, refer to Typical Application.

- **RN5RFxxB**

Topt=25°C

Symbol	Item	Conditions	Min.	Typ.	Max.	Unit
V_{OUT}	Output Voltage	V_{IN}-V_{OUT}=1.0V I_{OUT}=50mA	V_{OUT} ×0.98		V_{OUT} ×1.02	V
I_{OUT}	Output Current	V_{IN}-V_{OUT}=1.0V		1.0*1		A
I_{EXT}	EXT Current	V_{IN}=4.0V, V_{EXT}=2.0V	5	8	15	mA
$\Delta V_{OUT}/\Delta I_{OUT}$	Load Regulation	V_{IN}-V_{OUT}=1.0V 1mA≤I_{OUT}≤100mA	-60		60	mV
V_{DIF}	Dropout Voltage	I_{OUT}=100mA		0.1	0.2	V
I_{SS}	Supply Current	V_{IN}–V_{OUT}=1.0V I_{OUT}=0mA		30	50	μA
Istandby	Standby Current	V_{IN}=10.0V	0.01	0.10	1.00	μA
$I_{EXTleak}$	EXT Leakage Current				0.5	μA
$\Delta V_{OUT}/\Delta V_{IN}$	Line Regulation	I_{OUT}=50mA V_{OUT}+0.5V≤V_{IN}≤10V	0.00	0.05	0.30	%/V
R_R	Ripple Rejection	f=1kHz, sinusoidal 0.5Vp-p V_{IN}–V_{OUT}=1.0V		60		dB
V_{IN}	Input Voltage				10	V
V_{EXT}	EXT Output Voltage				10	V
$\Delta V_{OUT}/\Delta Topt$	Output Voltage Temperature Coefficient	I_{OUT}=10mA -40°C≤Topt≤85°C		±100		ppm/°C
R_{PD}	Pull down resistance for CE pin			4		MΩ
V_{CEH}	CE Input Voltage "H"		1.5		V_{IN}	V
V_{CEL}	CE Input Voltage "L"		0.00		0.25	V

*1) The output current depends on the performance of external PNP transistor. Use External PNP transistor of a low saturation type, with an h_{FE} between 100 and 300.

*) With respect to Test Circuit, refer to Typical Application.

OPERATION

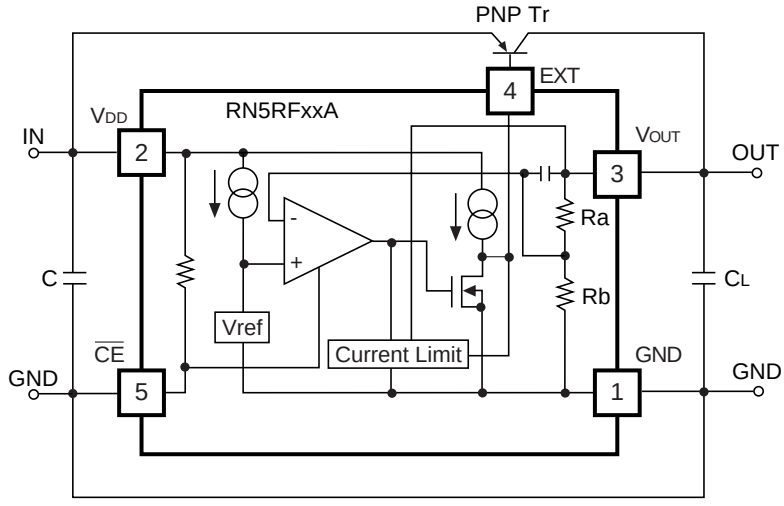

In these ICs, Output Voltage V_{OUT} is detected by feed-back resistors, R_A and R_B and the detected output voltage is com-pared with a reference voltage by the error amplifier so that the base current of an external PNP Transistor can be adjusted and the output voltage V_{OUT} is able to be regulated.

The base current of an external Tr. is monitored and controlled by an internal base current limit circuit to keep current within a proper range. Furthermore, the other current limit circuit prevents a problem which is that a base current increases sharply when an input voltage, V_{IN} becomes lower than set output voltage.

Notes on selecting external components
(1) On external PNP transistor Be careful of output current, input voltage and power dissipation of an external PNP Transistor. External PNP Transistor with a low V_{CE} (sat) and an h_{FE} between 100 and 300 is suitable.
(2) On phase compensation in these ICs, phase compensation is made for securing stable operation even if the load current is varied. For this purpose, be sure to use a capacitor C_L (tantalum type) with a capacitance of 10μF of more. There may be the case the loop oscillation takes place when a tantalum capacitor C_L with a large ESR is used, so select the C_L carefully with considering the frequency characteristics also.

TEST CIRCUITS

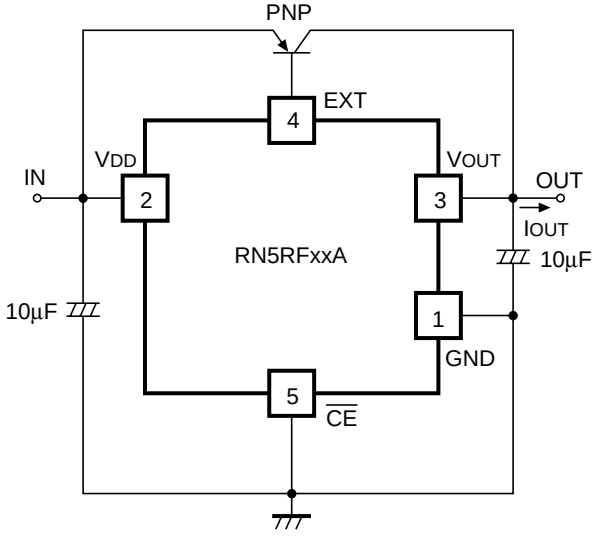

Basic Test Circuit

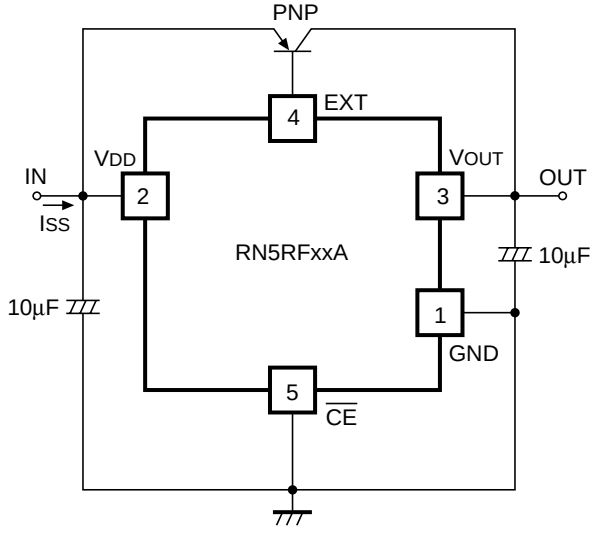

Test Circuit for Supply Current

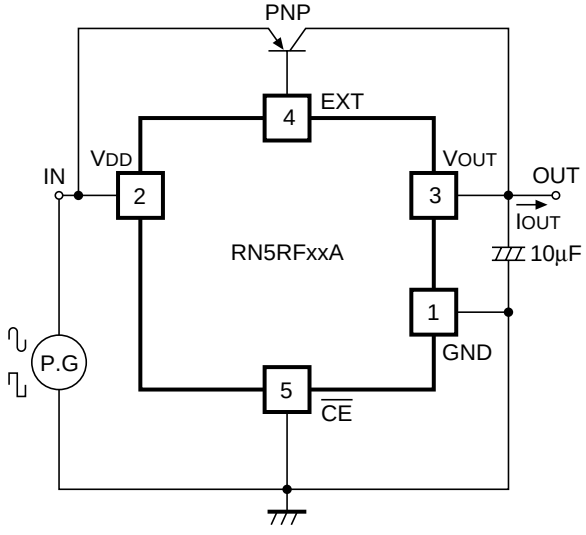

Test Circuit for Ripple Rejection and Line Transient Response

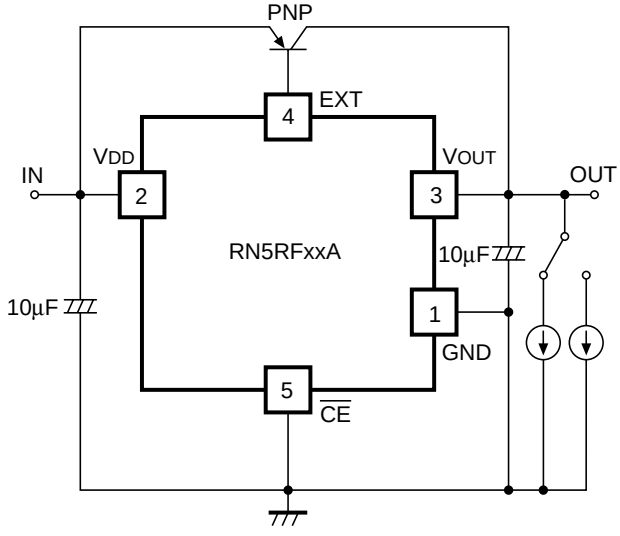

Test Circuit for Load Transient Response

TYPICAL CHARACTERISTICS

1) Output Voltage vs. Input Voltage (Topt=25°C)

RN5RF30A

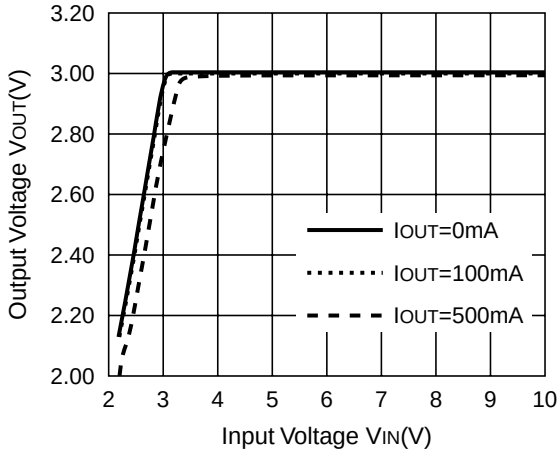

RN5RF50A

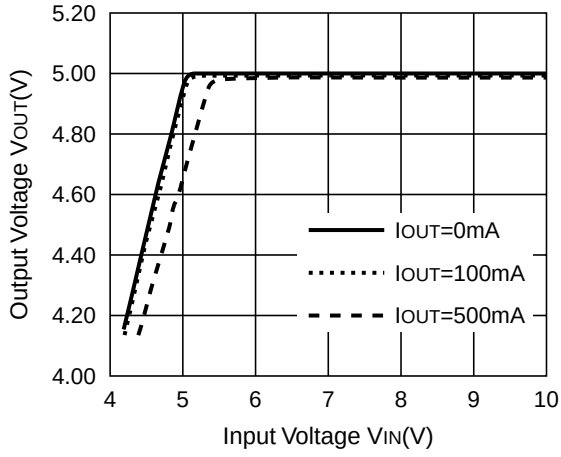

2) Output Voltage vs. Output Current (Topt=25°C)

RN5RF30A

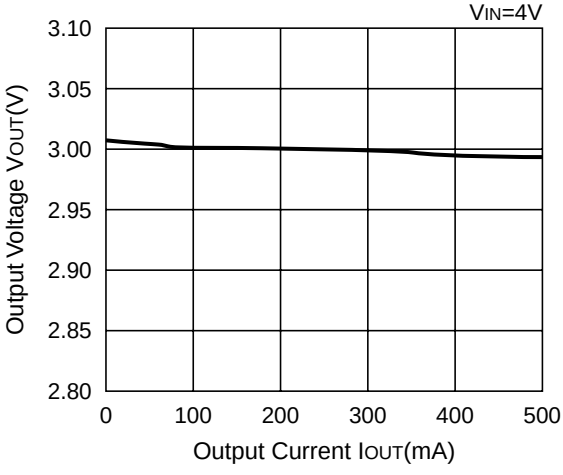

RN5RF50A

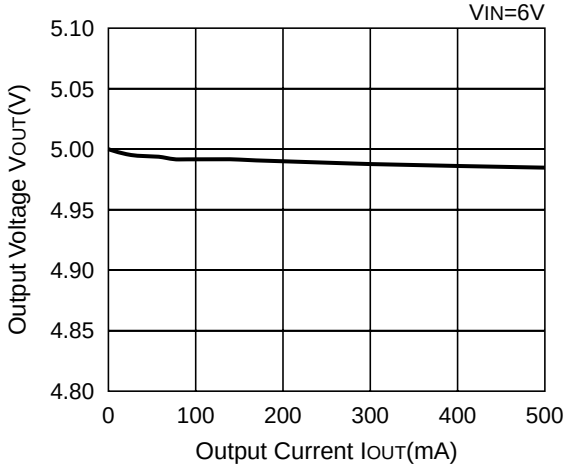

3) Dropout Voltage vs. Output Current

RN5RF30A

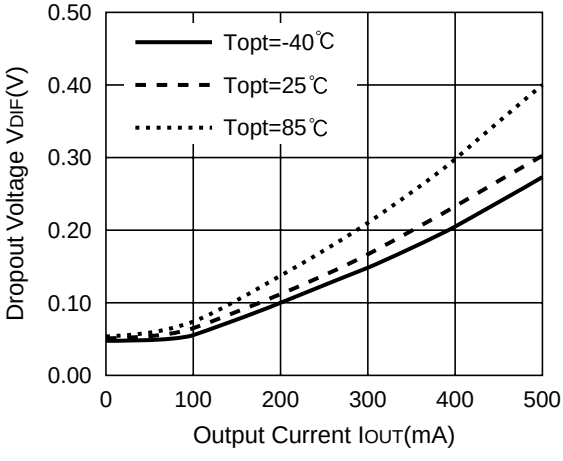

RN5RF50A

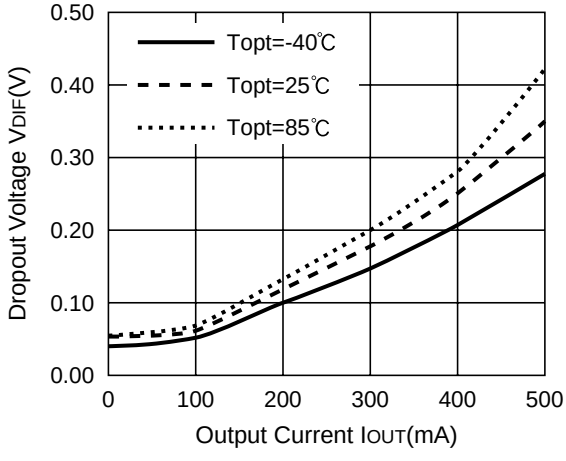

4) Output Voltage vs. Temperature

RN5RF30A

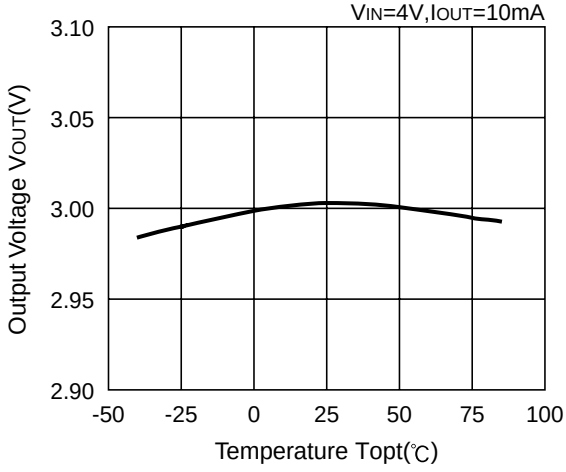

RN5RF50A

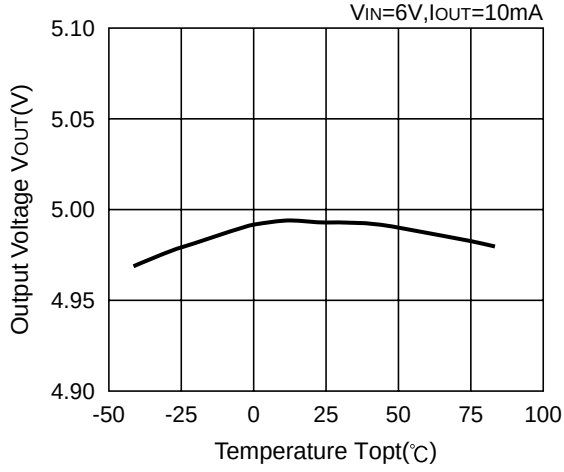

5) Supply Current vs. Input Voltage (Topt=25°C)

RN5RF30A

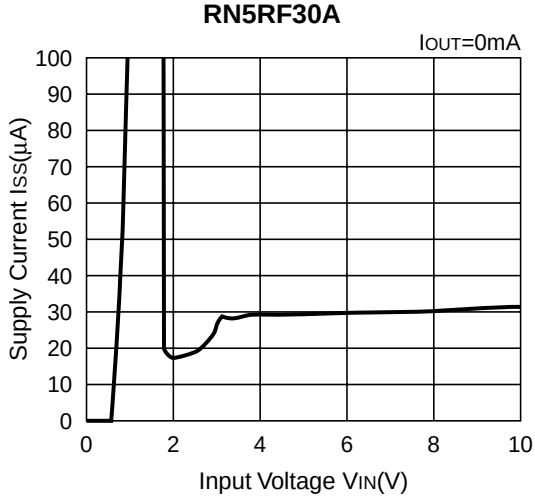

RN5RF50A

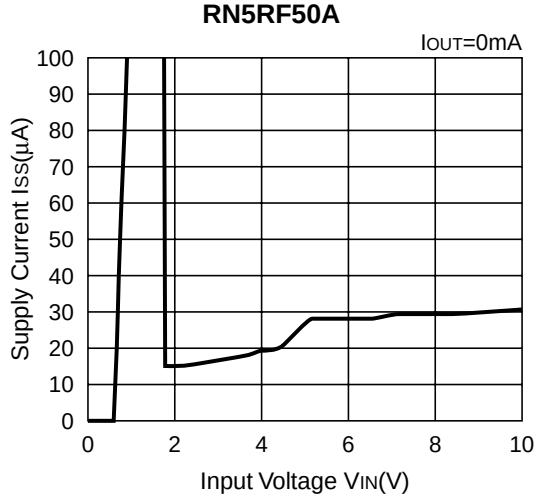

6) Supply Current vs. Temperature

RN5RF30A

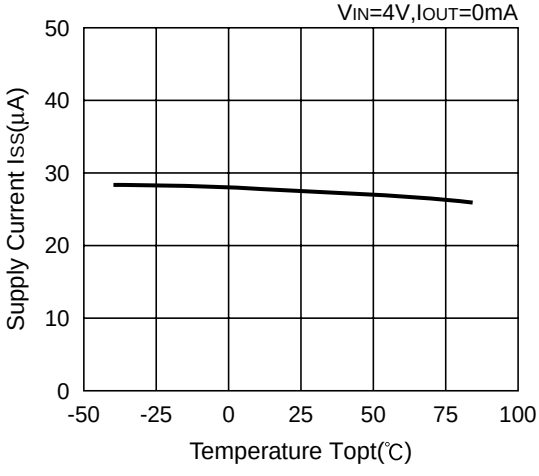

RN5RF50A

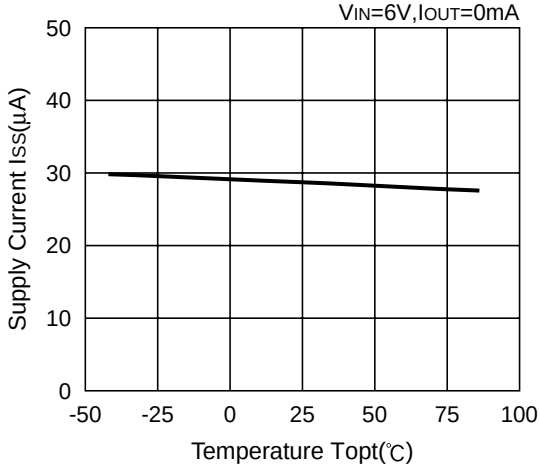

7) Ripple Rejection vs. Frequency (Topt=25°C)

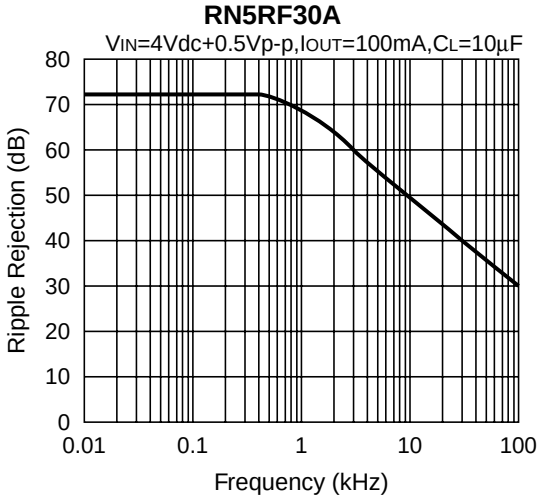

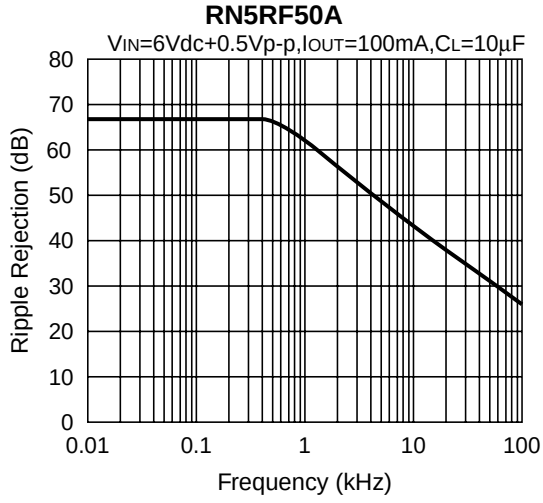

8) Line Transient Response (Topt=25°C)

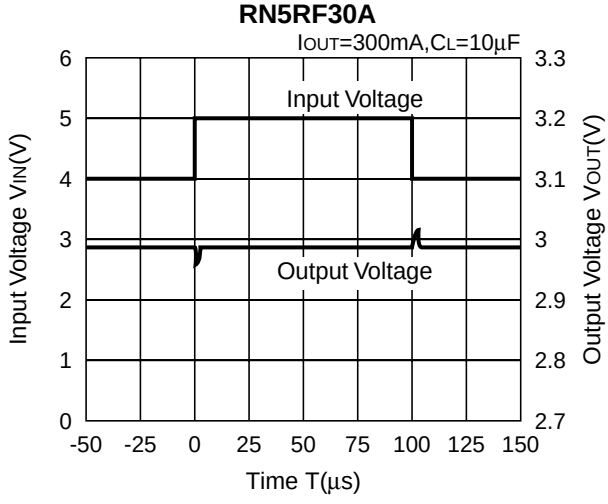

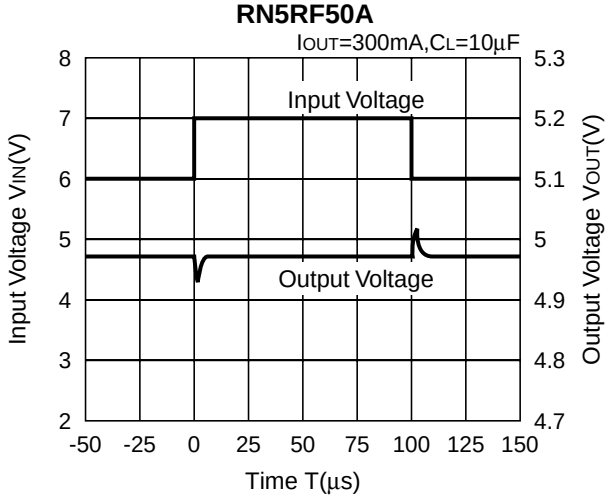

9) Load Transient Response (Topt=25°C)

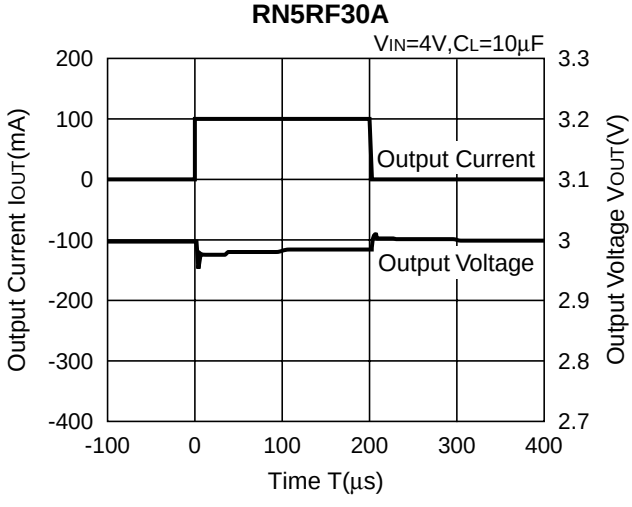

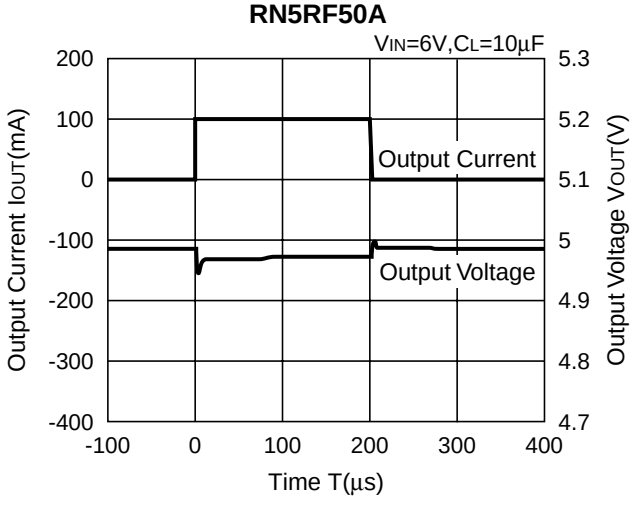

TYPICAL APPLICATION

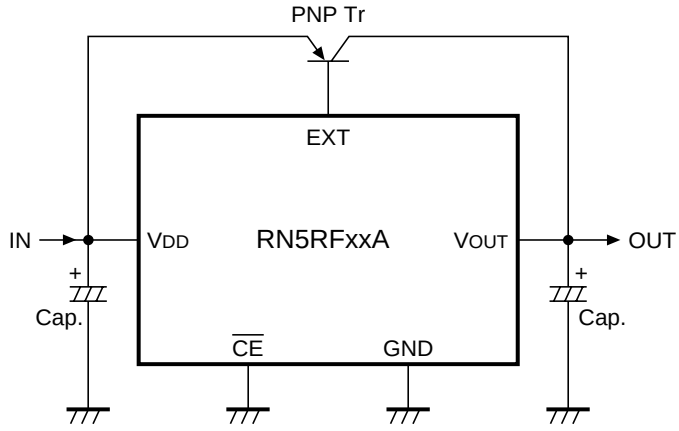

Components

Transistor: 2SB766A

Capacitor: 10µF (Tantalum type)

1. The products and the product specifications described in this document are subject to change or discontinuation of production without notice for reasons such as improvement. Therefore, before deciding to use the products, please refer to Ricoh sales representatives for the latest information thereon.
2. The materials in this document may not be copied or otherwise reproduced in whole or in part without prior written consent of Ricoh.
3. Please be sure to take any necessary formalities under relevant laws or regulations before exporting or otherwise taking out of your country the products or the technical information described herein.
4. The technical information described in this document shows typical characteristics of and example application circuits for the products. The release of such information is not to be construed as a warranty of or a grant of license under Ricoh's or any third party's intellectual property rights or any other rights.
5. The products listed in this document are intended and designed for use as general electronic components in standard applications (office equipment, telecommunication equipment, measuring instruments, consumer electronic products, amusement equipment etc.). Those customers intending to use a product in an application requiring extreme quality and reliability, for example, in a highly specific application where the failure or misoperation of the product could result in human injury or death (aircraft, spacevehicle, nuclear reactor control system, traffic control system, automotive and transportation equipment, combustion equipment, safety devices, life support system etc.) should first contact us.
6. We are making our continuous effort to improve the quality and reliability of our products, but semiconductor products are likely to fail with certain probability. In order to prevent any injury to persons or damages to property resulting from such failure, customers should be careful enough to incorporate safety measures in their design, such as redundancy feature, fire containment feature and fail-safe feature. We do not assume any liability or responsibility for any loss or damage arising from misuse or inappropriate use of the products.
7. Anti-radiation design is not implemented in the products described in this document.
8. Please contact Ricoh sales representatives should you have any questions or comments concerning the products or the technical information.

RoHS Compliant
Halogen Free

Ricoh is committed to reducing the environmental loading materials in electrical devices with a view to contributing to the protection of human health and the environment.
Ricoh has been providing RoHS compliant products since April 1, 2006 and Halogen-free products since April 1, 2012.

RICOH RICOH ELECTRONIC DEVICES CO., LTD.

http://www.e-devices.ricoh.co.jp/en/

Sales & Support Offices

RICOH ELECTRONIC DEVICES CO., LTD.
Higashi-Shinagawa Office (International Sales)
3-32-3, Higashi-Shinagawa, Shinagawa-ku, Tokyo 140-8655, Japan
Phone: +81-3-5479-2857 Fax: +81-3-5479-0502

RICOH EUROPE (NETHERLANDS) B.V.
Semiconductor Support Centre
Prof. W.H. Keesomlaan 1, 1183 DJ Amstelveen, The Netherlands
Phone: +31-20-5474-309

RICOH ELECTRONIC DEVICES KOREA CO., LTD.
3F, Haesung Bldg, 504, Teheran-ro, Gangnam-gu, Seoul, 135-725, Korea
Phone: +82-2-2135-5700 Fax: +82-2-2051-5713

RICOH ELECTRONIC DEVICES SHANGHAI CO., LTD.
Room 403, No.2 Building, No.690 Bibo Road, Pu Dong New District, Shanghai 201203, People's Republic of China
Phone: +86-21-5027-3200 Fax: +86-21-5027-3299

RICOH ELECTRONIC DEVICES CO., LTD.
Taipei office
Room 109, 10F-1, No.51, Hengyang Rd., Taipei City, Taiwan (R.O.C.)
Phone: +886-2-2313-1621/1622 Fax: +886-2-2313-1623

Mouser Electronics

Authorized Distributor

Click to View Pricing, Inventory, Delivery & Lifecycle Information:

Ricoh Electronics:

RN5RF46AA-TR-FE RN5RF50AA-TR-FE RN5RF33BA-TR-FE RN5RF50BA-TR-FE RN5RF23AA-TR-FE RN5RF43AA-TR-FE RN5RF40BA-TR-FE

ООО «ЛайфЭлектроникс» “LifeElectronics” LLC

ИНН 7805602321 КПП 780501001 Р/С 40702810122510004610 ФАКБ "АБСОЛЮТ БАНК" (ЗАО) в г.Санкт-Петербурге К/С 30101810900000000703 БИК 044030703

Компания «Life Electronics» занимается поставками электронных компонентов импортного и отечественного производства от производителей и со складов крупных дистрибьюторов Европы, Америки и Азии.

С конца 2013 года компания активно расширяет линейку поставок компонентов по направлению коаксиальный кабель, кварцевые генераторы и конденсаторы (керамические, пленочные, электролитические), за счёт заключения дистрибьюторских договоров

Мы предлагаем:

- *Конкурентоспособные цены и скидки постоянным клиентам.*
- *Специальные условия для постоянных клиентов.*
- *Подбор аналогов.*
- *Поставку компонентов в любых объемах, удовлетворяющих вашим потребностям.*

- *Приемлемые сроки поставки, возможна ускоренная поставка.*
- *Доставку товара в любую точку России и стран СНГ.*
- *Комплексную поставку.*
- *Работу по проектам и поставку образцов.*
- *Формирование склада под заказчика.*

- *Сертификаты соответствия на поставляемую продукцию (по желанию клиента).*
- *Тестирование поставляемой продукции.*
- *Поставку компонентов, требующих военную и космическую приемку.*
- *Входной контроль качества.*
- *Наличие сертификата ISO.*

В составе нашей компании организован Конструкторский отдел, призванный помогать разработчикам, и инженерам.

Конструкторский отдел помогает осуществить:

- *Регистрацию проекта у производителя компонентов.*
- *Техническую поддержку проекта.*
- *Защиту от снятия компонента с производства.*
- *Оценку стоимости проекта по компонентам.*
- *Изготовление тестовой платы монтаж и пусконаладочные работы.*

Тел: +7 (812) 336 43 04 (многоканальный)
Email: org@lifeelectronics.ru

www.lifeelectronics.ru