512K x 36, 1M x 18
2.5V Synchronous ZBT™ SRAMs
2.5V I/O, Burst Counter
Pipelined Outputs

IDT71T75602
IDT71T75802

Features

- 512K x 36, 1M x 18 memory configurations
- Supports high performance system speed - 200 MHz (3.2 ns Clock-to-Data Access)
- ZBT™ Feature - No dead cycles between write and read cycles
- Internally synchronized output buffer enable eliminates the need to control $\overline{OE}$
- Single R/$\overline{W}$ (READ/WRITE) control pin
- Positive clock-edge triggered address, data, and control signal registers for fully pipelined applications
- 4-word burst capability (interleaved or linear)
- Individual byte write ($\overline{BW}_1$ - $\overline{BW}_4$) control (May tie active)
- Three chip enables for simple depth expansion
- 2.5V power supply (±5%)
- 2.5V I/O Supply (V_{DDQ})
- Power down controlled by ZZ input
- Boundary Scan JTAG Interface (IEEE 1149.1 Compliant)
- Packaged in a JEDEC standard 100-pin plastic thin quad flatpack (TQFP), 119 ball grid array (BGA)
- Green parts available, see Ordering Information

Functional Block Diagram - 512K x 36

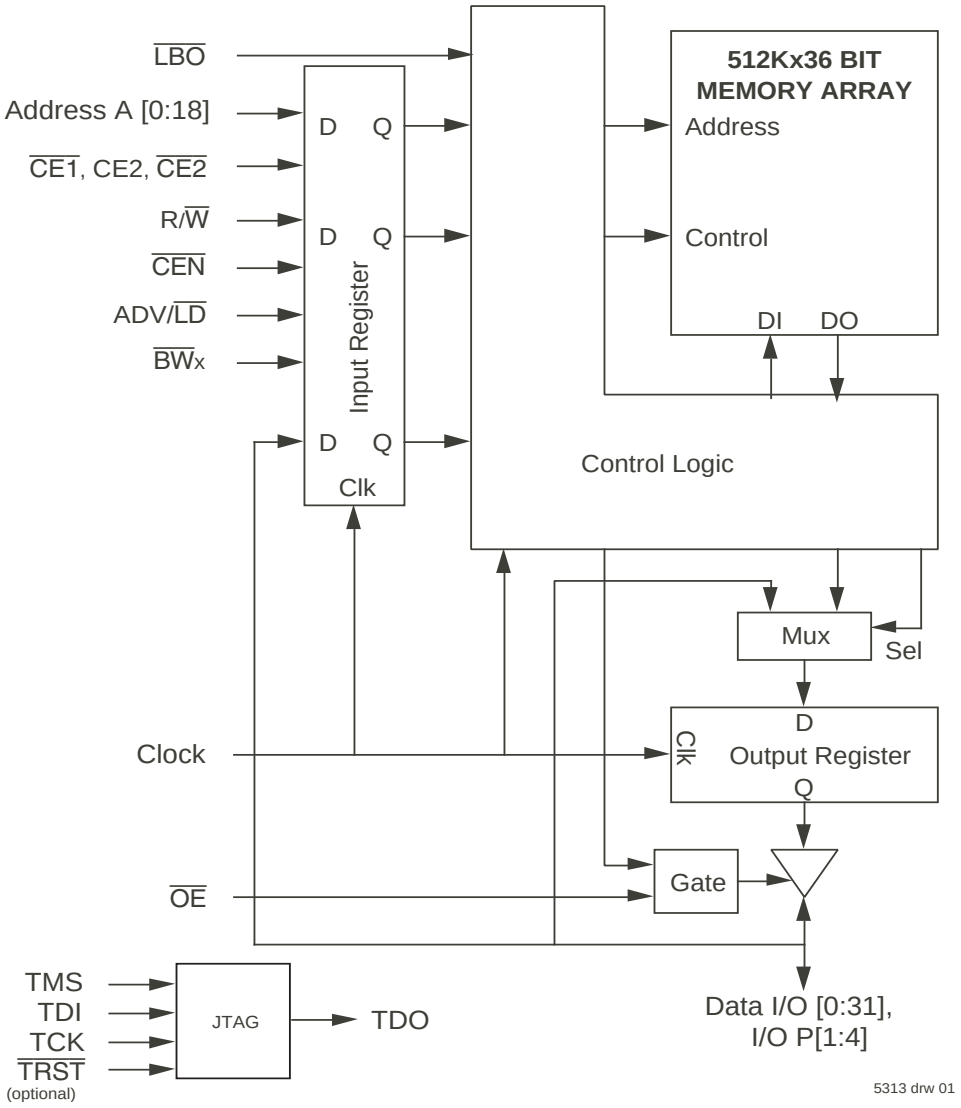

OCTOBER 2017

©2017 Integrated Device Technology, Inc.

Description

The IDT71T75602/802 are 2.5V high-speed 18,874,368-bit (18 Mega-bit) synchronous SRAMs. They are designed to eliminate dead bus cycles when turning the bus around between reads and writes, or writes and reads. Thus, they have been given the name ZBT™, or Zero Bus Turnaround.

Address and control signals are applied to the SRAM during one clock cycle, and two cycles later the associated data cycle occurs, be it read or write.

The IDT71T75602/802 contain data I/O, address and control signal registers. Output enable is the only asynchronous signal and can be used to disable the outputs at any given time.

A Clock Enable $\overline{CEN}$ pin allows operation of the IDT71T75602/802 to be suspended as long as necessary. All synchronous inputs are ignored when ($\overline{CEN}$) is high and the internal device registers will hold their previous values.

There are three chip enable pins ($\overline{CE}_1$, CE_2, $\overline{CE}_2$) that allow the user to deselect the device when desired. If any one of these three is not asserted when ADV/$\overline{LD}$ is low, no new memory operation can be initiated.

However, any pending data transfers (reads or writes) will be completed. The data bus will tri-state two cycles after the chip is deselected or a write is initiated.

The IDT71T75602/802 have an on-chip burst counter. In the burst mode, the IDT71T75602/802 can provide four cycles of data for a single address presented to the SRAM. The order of the burst sequence is defined by the $\overline{LBO}$ input pin. The $\overline{LBO}$ pin selects between linear and interleaved burst sequence. The ADV/$\overline{LD}$ signal is used to load a new external address (ADV/$\overline{LD}$ = LOW) or increment the internal burst counter (ADV/$\overline{LD}$ = HIGH).

The IDT71T75602/802 SRAMs utilize a high-performance 2.5V CMOS process, and are packaged in a JEDEC Standard 14mm x 20mm 100pin thin plastic quad flatpack (TQFP) as well as a 119 ball grid array (BGA).

Functional Block Diagram - 1M x 18

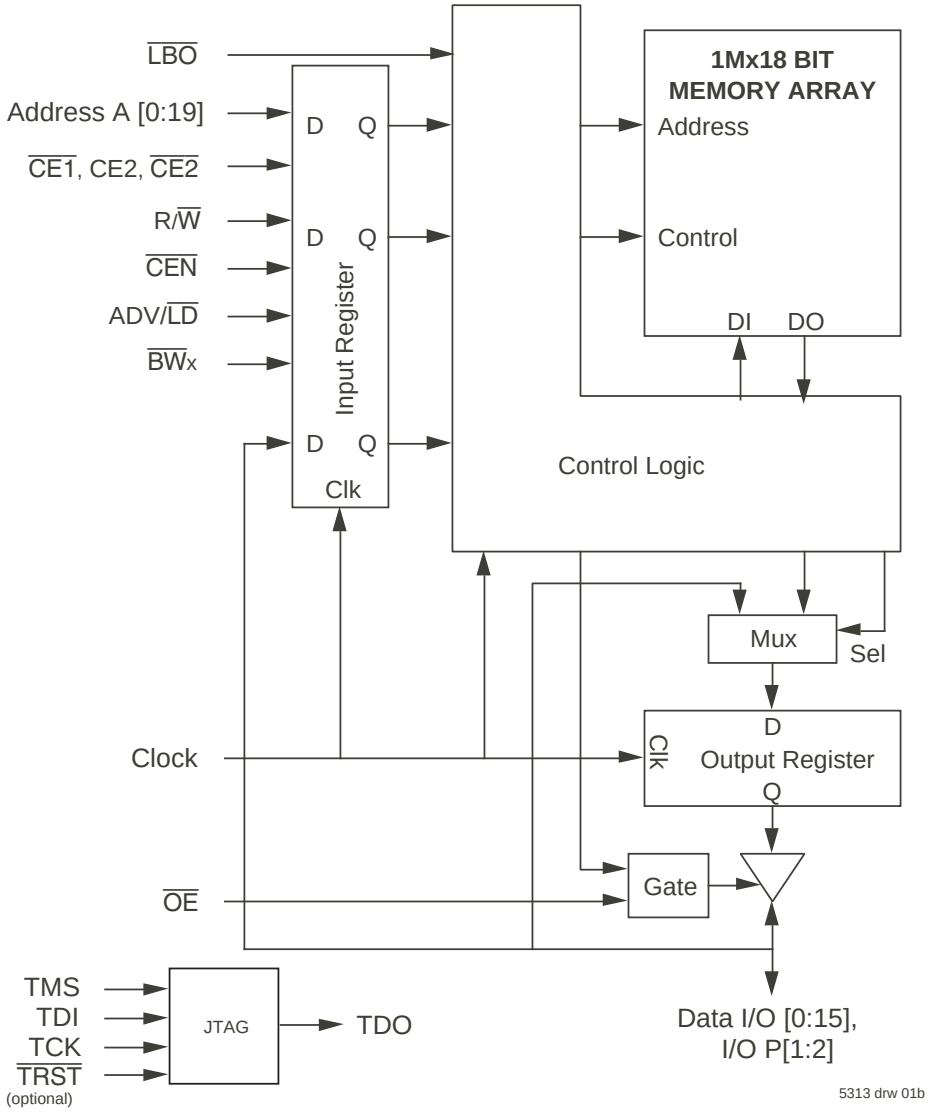

Pin Description Summary

A_0-A_{19}	Address Inputs	Input	Synchronous
$\overline{CE}_1$, CE_2, $\overline{CE}_2$	Chip Enables	Input	Synchronous
$\overline{OE}$	Output Enable	Input	Asynchronous
R/$\overline{W}$	Read/Write Signal	Input	Synchronous
$\overline{CEN}$	Clock Enable	Input	Synchronous
$\overline{BW}_1$, $\overline{BW}_2$, $\overline{BW}_3$, $\overline{BW}_4$	Individual Byte Write Selects	Input	Synchronous
CLK	Clock	Input	N/A
ADV/$\overline{LD}$	Advance burst address / Load new address	Input	Synchronous
$\overline{LBO}$	Linear / Interleaved Burst Order	Input	Static
TMS	Test Mode Select	Input	N/A
TDI	Test Data Input	Input	N/A
TCK	Test Clock	Input	N/A
TDO	Test Data Input	Output	N/A
$\overline{TRST}$	JTAG Reset (Optional)	Input	Asynchronous
ZZ	Sleep Mode	Input	Synchronous
I/O_0-I/O_{31}, I/O_{P1}-I/O_{P4}	Data Input / Output	I/O	Synchronous
V_{DD}, V_{DDQ}	Core Power, I/O Power	Supply	Static
V_{SS}	Ground	Supply	Static

5313 tbl 01

Pin Definitions(1)

Symbol	Pin Function	I/O	Active	Description
A_0-A_{19}	Address Inputs	I	N/A	Synchronous Address inputs. The address register is triggered by a combination of the rising edge of CLK, ADV/$\overline{LD}$ low, $\overline{CEN}$ low, and true chip enables.
ADV/$\overline{LD}$	Advance / Load	I	N/A	ADV/$\overline{LD}$ is a synchronous input that is used to load the internal registers with new address and control when it is sampled low at the rising edge of clock with the chip selected. When ADV/$\overline{LD}$ is low with the chip deselected, any burst in progress is terminated. When ADV/$\overline{LD}$ is sampled high then the internal burst counter is advanced for any burst that was in progress. The external addresses are ignored when ADV/$\overline{LD}$ is sampled high.
R/$\overline{W}$	Read / Write	I	N/A	R/$\overline{W}$ signal is a synchronous input that identifies whether the current load cycle initiated is a Read or Write access to the memory array. The data bus activity for the current cycle takes place two clock cycles later.
$\overline{CEN}$	Clock Enable	I	LOW	Synchronous Clock Enable Input. When $\overline{CEN}$ is sampled high, all other synchronous inputs, including clock are ignored and outputs remain unchanged. The effect of $\overline{CEN}$ sampled high on the device outputs is as if the low to high clock transition did not occur. For normal operation, $\overline{CEN}$ must be sampled low at rising edge of clock.
$\overline{BW}_1$-$\overline{BW}_4$	Individual Byte Write Enables	I	LOW	Synchronous byte write enables. Each 9-bit byte has its own active low byte write enable. On load write cycles (when R/$\overline{W}$ and ADV/$\overline{LD}$ are sampled low) the appropriate byte write signal ($\overline{BW}_1$-$\overline{BW}_4$) must be valid. The byte write signal must also be valid on each cycle of a burst write. Byte Write signals are ignored when R/$\overline{W}$ is sampled high. The appropriate byte(s) of data are written into the device two cycles later. $\overline{BW}_1$-$\overline{BW}_4$ can all be tied low if always doing write to the entire 36-bit word.
$\overline{CE}_1$, $\overline{CE}_2$	Chip Enables	I	LOW	Synchronous active low chip enable. $\overline{CE}_1$ and $\overline{CE}_2$ are used with CE_2 to enable the IDT71T75602/802 ($\overline{CE}_1$ or $\overline{CE}_2$ sampled high or CE_2 sampled low) and ADV/$\overline{LD}$ low at the rising edge of clock, initiates a deselect cycle. The ZBT™ has a two cycle deselect, i.e., the data bus will tri-state two clock cycles after deselect is initiated.
CE_2	Chip Enable	I	HIGH	Synchronous active high chip enable. CE_2 is used with $\overline{CE}_1$ and $\overline{CE}_2$ to enable the chip. CE_2 has inverted polarity but otherwise identical to $\overline{CE}_1$ and $\overline{CE}_2$.
CLK	Clock	I	N/A	This is the clock input to the IDT71T75602/802. Except for $\overline{OE}$, all timing references for the device are made with respect to the rising edge of CLK.
I/O_0-I/O_{31} I/O_{P1}-I/O_{P4}	Data Input/Output	I/O	N/A	Synchronous data input/output (I/O) pins. Both the data input path and data output path are registered and triggered by the rising edge of CLK.
$\overline{LBO}$	Linear Burst Order	I	LOW	Burst order selection input. When $\overline{LBO}$ is high the Interleaved burst sequence is selected. When $\overline{LBO}$ is low the Linear burst sequence is selected. $\overline{LBO}$ is a static input and it must not change during device operation.
$\overline{OE}$	Output Enable	I	LOW	Asynchronous output enable. $\overline{OE}$ must be low to read data from the 71T75602/802. When $\overline{OE}$ is high the I/O pins are in a high-impedance state.$\overline{OE}$ does not need to be actively controlled for read and write cycles. In normal operation, $\overline{OE}$ can be tied low.
TMS	Test Mode Select	I	N/A	Gives input command for TAP controller. Sampled on rising edge of TDK. This pin has an internal pullup.
TDI	Test Data Input	I	N/A	Serial input of registers placed between TDI and TDO. Sampled on rising edge of TCK. This pin has an internal pullup.
TCK	Test Clock	I	N/A	Clock input of TAP controller. Each TAP event is clocked. Test inputs are captured on rising edge of TCK, while test outputs are driven from the falling edge of TCK. This pin has an internal pullup.
TDO	Test Data Output	O	N/A	Serial output of registers placed between TDI and TDO. This output is active depending on the state of the TAP controller.
$\overline{TRST}$	JTAG Reset (Optional)	I	LOW	Optional asynchronous JTAG reset. Can be used to reset the TAP controller, but not required. JTAG reset occurs automatically at power up and also resets using TMS and TCK per IEEE 1149.1. If not used $\overline{TRST}$ can be left floating. This pin has an internal pullup. Only available in BGA package.
ZZ	Sleep Mode	I	HIGH	Synchronous sleep mode input. ZZ HIGH will gate the CLK internally and power down the IDT71T75602/802 to its lowest power consumption level. Data retention is guaranteed in Sleep Mode. This pin has an internal pulldown.
V_{DD}	Power Supply	N/A	N/A	2.5V core power supply.
V_{DDQ}	Power Supply	N/A	N/A	2.5V I/O Supply.
V_{SS}	Ground	N/A	N/A	Ground.

5313 tbl 02

NOTE:

1. All synchronous inputs must meet specified setup and hold times with respect to CLK.

Recommended DC Operating Conditions

Symbol	Parameter	Min.	Typ.	Max.	Unit
V_{DD}	Core Supply Voltage	2.375	2.5	2.625	V
V_{DDQ}	I/O Supply Voltage	2.375	2.5	2.625	V
V_{SS}	Ground	0	0	0	V
V_{IH}	Input High Voltage - Inputs	1.7	—	V_{DD} +0.3	V
V_{IH}	Input High Voltage - I/O	1.7	—	V_{DDQ}+0.3	V
V_{IL}	Input Low Voltage	-0.3[1]	—	0.7	V

5313 tbl 03

NOTE:
1. V_{IL} (min.) = –0.8V for pulse width less than t_{CYC}/2, once per cycle.

Recommended Operating Temperature and Supply Voltage

Grade	Ambient Temperature[1]	VSS	VDD	VDDQ
Commercial	0° C to +70° C	OV	2.5V ± 5%	2.5V ± 5%
Industrial	-40° C to +85° C	OV	2.5V ± 5%	2.5V ± 5%

5313 tbl 05

NOTE:
1. During production testing, the case temperature equals the ambient temperature.

Pin Configuration — 512K x 36

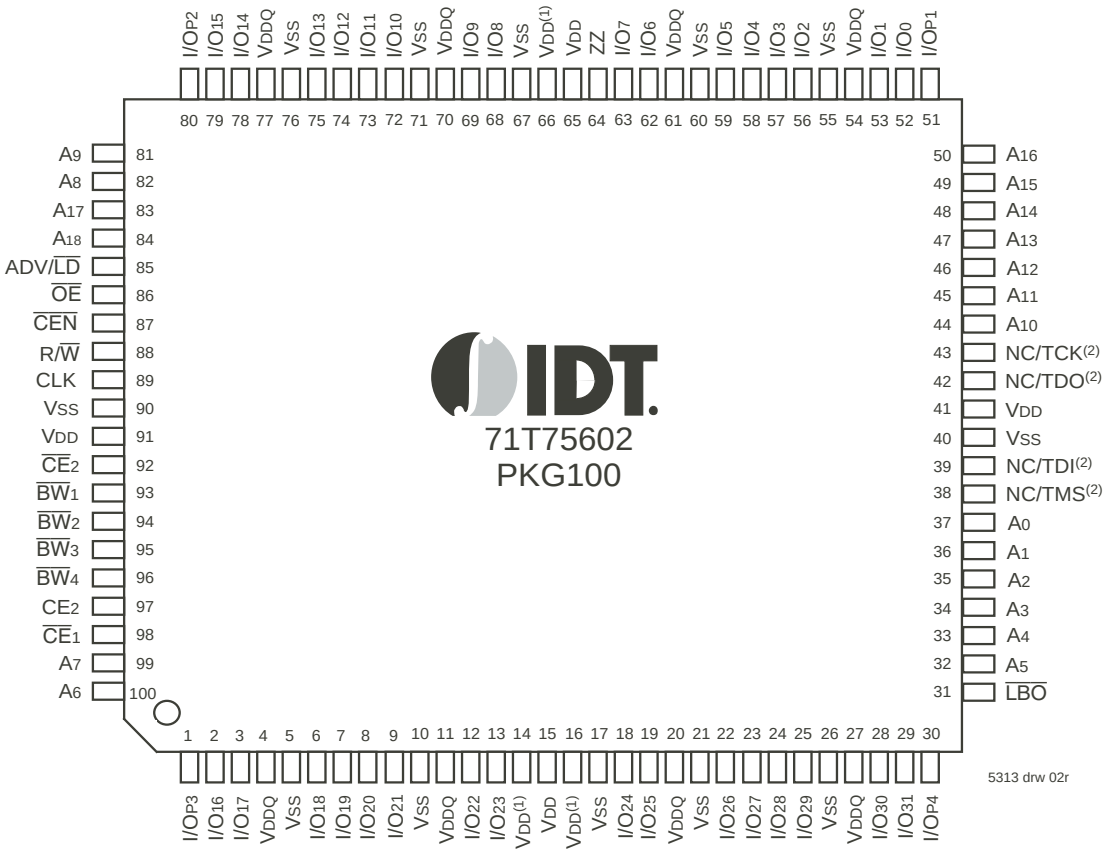

Top View
100 TQFP

NOTES:
1. Pins 14, 16, and 66 do not have to be connected directly to V_{DD} as long as the input voltage is $\geq V_{IH}$.
2. Pins 38, 39 and 43 will be pulled internally to V_{DD} if not actively driven. To disable the TAP controller without interfering with normal operation, several settings are possible. Pins 38, 39 and 43 could be tied to V_{DD} or V_{SS} and pin 42 should be left unconnected. Or all JTAG inputs (TMS, TDI and TCK) pins 38, 39 and 43 could be left unconnected "NC" and the JTAG circuit will remain disabled from power up.

Pin Configuration — 1Mx 18

Top View
100 TQFP

NOTES:

1. Pins 14, 16, and 66 do not have to be connected directly to V_{DD} as long as the input voltage is $\geq V_{IH}$.
2. Pins 38, 39 and 43 will be pulled internally to V_{DD} if not actively driven. To disable the TAP controller without interfering with normal operation, several settings are possible. Pins 38, 39 and 43 could be tied to V_{DD} or V_{SS} and pin 42 should be left unconnected. Or all JTAG inputs (TMS, TDI and TCK) pins 38, 39 and 43 could be left unconnected "NC" and the JTAG circuit will remain disabled from power up.

Pin Configuration — 512K X 36, 119 BGA(1,2)
Top View

	1	2	3	4	5	6	7
A	V_{DDQ}	A_6	A_4	A_{18}	A_8	A_{16}	V_{DDQ}
B	NC	CE_2	A_3	ADV/$\overline{LD}$	A_9	$\overline{CE}_2$	NC
C	NC	A_7	A_2	V_{DD}	A_{12}	A_{15}	NC
D	I/O_{16}	I/O_{P3}	V_{SS}	NC	V_{SS}	I/O_{P2}	I/O_{15}
E	I/O_{17}	I/O_{18}	V_{SS}	$\overline{CE}_1$	V_{SS}	I/O_{13}	I/O_{14}
F	V_{DDQ}	I/O_{19}	V_{SS}	$\overline{OE}$	V_{SS}	I/O_{12}	V_{DDQ}
G	I/O_{20}	I/O_{21}	$\overline{BW}_3$	A_{17}	$\overline{BW}_2$	I/O_{11}	I/O_{10}
H	I/O_{22}	I/O_{23}	V_{SS}	R/$\overline{W}$	V_{SS}	I/O_9	I/O_8
J	V_{DDQ}	V_{DD}	V_{DD}(1)	V_{DD}	V_{DD}(1)	V_{DD}	V_{DDQ}
K	I/O_{24}	I/O_{26}	V_{SS}	CLK	V_{SS}	I/O_6	I/O_7
L	I/O_{25}	I/O_{27}	$\overline{BW}_4$	NC	$\overline{BW}_1$	I/O_4	I/O_5
M	V_{DDQ}	I/O_{28}	V_{SS}	$\overline{CEN}$	V_{SS}	I/O_3	V_{DDQ}
N	I/O_{29}	I/O_{30}	V_{SS}	A_1	V_{SS}	I/O_2	I/O_1
P	I/O_{31}	I/O_{P4}	V_{SS}	A_0	V_{SS}	I/O_{P1}	I/O_0
R	NC	A_5	$\overline{LBO}$	V_{DD}	V_{DD}(1)	A_{13}	NC
T	NC	NC	A_{10}	A_{11}	A_{14}	NC	ZZ
U	V_{DDQ}	NC/TMS(2)	NC/TDI(2)	NC/TCK(2)	NC/TDO(2)	NC/$\overline{TRST}$(2,3)	V_{DDQ}

5313 tbl 25b

Pin Configuration — 1M X 18, 119 BGA(1,2)
Top View

	1	2	3	4	5	6	7
A	V_{DDQ}	A_6	A_4	A_{19}	A_8	A_{16}	V_{DDQ}
B	NC	CE_2	A_3	ADV/$\overline{LD}$	A_9	$\overline{CE}_2$	NC
C	NC	A_7	A_2	V_{DD}	A_{13}	A_{17}	NC
D	I/O_8	NC	V_{SS}	NC	V_{SS}	I/O_{P1}	NC
E	NC	I/O_9	V_{SS}	$\overline{CE}_1$	V_{SS}	NC	I/O_7
F	V_{DDQ}	NC	V_{SS}	$\overline{OE}$	V_{SS}	I/O_6	V_{DDQ}
G	NC	I/O_{10}	$\overline{BW}_2$	A_{18}	V_{SS}	NC	I/O_5
H	I/O_{11}	NC	V_{SS}	R/$\overline{W}$	V_{SS}	I/O_4	NC
J	V_{DDQ}	V_{DD}	V_{DD}(1)	V_{DD}	V_{DD}(1)	V_{DD}	V_{DDQ}
K	NC	I/O_{12}	V_{SS}	CLK	V_{SS}	NC	I/O_3
L	I/O_{13}	NC	V_{SS}	NC	$\overline{BW}_1$	I/O_2	NC
M	V_{DDQ}	I/O_{14}	V_{SS}	$\overline{CEN}$	V_{SS}	NC	V_{DDQ}
N	I/O_{15}	NC	V_{SS}	A_1	V_{SS}	I/O_1	NC
P	NC	I/O_{P2}	V_{SS}	A_0	V_{SS}	NC	I/O_0
R	NC	A_5	$\overline{LBO}$	V_{DD}	V_{DD}(1)	A_{12}	NC
T	NC	A_{10}	A_{15}	NC	A_{14}	A_{11}	ZZ
U	V_{DDQ}	NC/TMS(2)	NC/TDI(2)	NC/TCK(2)	NC/TDO(2)	NC/$\overline{TRST}$(2,3)	V_{DDQ}

5313 tbl 25c

NOTES:

1. J3, R5, and J5 do not have to be directly connected to V_{DD} as long as the input voltage is $\geq V_{IH}$.
2. U2, U3, U4 and U6 will be pulled internally to V_{DD} if not actively driven. To disable the TAP controller without interfering with normal operation, several settings are possible. U2, U3, U4 and U6 could be tied to VDD or VSS and U5 should be left unconnected. Or all JTAG inputs(TMS, TDI, and TCK and $\overline{TRST}$) U2, U3, U4 and U6 could be left unconnected "NC" and the JTAG circuit will remain disabled from power up.
3. $\overline{TRST}$ is offered as an optional JTAG reset if required in the application. If not needed, can be left floating and will internally be pulled to V_{DD}.

Absolute Maximum Ratings(1)

Symbol	Rating	Commercial	Industrial	Unit
V_{TERM}(2)	Terminal Voltage with Respect to GND	-0.5 to +3.6	-0.5 to +3.6	V
V_{TERM}(3,6)	Terminal Voltage with Respect to GND	-0.5 to V_{DD}	-0.5 to V_{DD}	V
V_{TERM}(4,6)	Terminal Voltage with Respect to GND	-0.5 to V_{DD} +0.5	-0.5 to V_{DD} +0.5	V
V_{TERM}(5,6)	Terminal Voltage with Respect to GND	-0.5 to V_{DDQ} +0.5	-0.5 to V_{DDQ} +0.5	V
T_A(7)	Operating Ambient Temperature	0 to +70	-40 to +85	°C
T_{BIAS}	Temperature Under Bias	-55 to +125	-55 to +125	°C
T_{STG}	Storage Temperature	-55 to +125	-55 to +125	°C
P_T	Power Dissipation	2.0	2.0	W
I_{OUT}	DC Output Current	50	50	mA

5313 tbl 06

NOTES:

1. Stresses greater than those listed under ABSOLUTE MAXIMUM RATINGS may cause permanent damage to the device. This is a stress rating only and functional operation of the device at these or any other conditions above those indicated in the operational sections of this specification is not implied. Exposure to absolute maximum rating conditions for extended periods may affect reliability.
2. V_{DD} terminals only.
3. V_{DDQ} terminals only.
4. Input terminals only.
5. I/O terminals only.
6. This is a steady-state DC parameter that applies after the power supply has reached its nominal operating value. Power sequencing is not necessary; however, the voltage on any input or I/O pin cannot exceed V_{DDQ} during power supply ramp up.
7. During production testing, the case temperature equals T_A.

100-Pin TQFP Capacitance

(T_A = +25°C, f = 1.0MHz)

Symbol	Parameter(1)	Conditions	Max.	Unit
C_{IN}	Input Capacitance	V_{IN} = 3dV	5	pF
$C_{I/O}$	I/O Capacitance	V_{OUT} = 3dV	7	pF

5313 tbl 07

119 BGA Capacitance

(T_A = +25°C, f = 1.0MHz)

Symbol	Parameter(1)	Conditions	Max.	Unit
C_{IN}	Input Capacitance	V_{IN} = 3dV	7	pF
$C_{I/O}$	I/O Capacitance	V_{OUT} = 3dV	7	pF

5313 tbl 07a

NOTE:

1. This parameter is guaranteed by device characterization, but not production tested.

Synchronous Truth Table(1)

$\overline{CEN}$	R/$\overline{W}$	Chip(5) Enable	ADV/$\overline{LD}$	$\overline{BW}$x	ADDRESS USED	PREVIOUS CYCLE	CURRENT CYCLE	I/O (2 cycles later)
L	L	Select	L	Valid	External	X	LOAD WRITE	D(7)
L	H	Select	L	X	External	X	LOAD READ	Q(7)
L	X	X	H	Valid	Internal	LOAD WRITE / BURST WRITE	BURST WRITE (Advance burst counter)(2)	D(7)
L	X	X	H	X	Internal	LOAD READ / BURST READ	BURST READ (Advance burst counter)(2)	Q(7)
L	X	Deselect	L	X	X	X	DESELECT or STOP(3)	HiZ
L	X	X	H	X	X	DESELECT / NOOP	NOOP	HiZ
H	X	X	X	X	X	X	SUSPEND(4)	Previous Value

5313 tbl 08

NOTES:
1. L = V_{IL}, H = V_{IH}, X = Don't Care.
2. When ADV/$\overline{LD}$ signal is sampled high, the internal burst counter is incremented. The R/$\overline{W}$ signal is ignored when the counter is advanced. Therefore the nature of the burst cycle (Read or Write) is determined by the status of the R/$\overline{W}$ signal when the first address is loaded at the beginning of the burst cycle.
3. Deselect cycle is initiated when either ($\overline{CE}_1$, or $\overline{CE}_2$ is sampled high or CE_2 is sampled low) and ADV/$\overline{LD}$ is sampled low at rising edge of clock. The data bus will tri-state two cycles after deselect is initiated.
4. When $\overline{CEN}$ is sampled high at the rising edge of clock, that clock edge is blocked from propagating through the part. The state of all the internal registers and the I/Os remains unchanged.
5. To select the chip requires $\overline{CE}_1$ = L, $\overline{CE}_2$ = L, CE_2 = H on these chip enables. Chip is deselected if any one of the chip enables is false.
6. Device Outputs are ensured to be in High-Z after the first rising edge of clock upon power-up.
7. Q - Data read from the device, D - data written to the device.

Partial Truth Table for Writes(1)

OPERATION	R/$\overline{W}$	$\overline{BW}_1$	$\overline{BW}_2$	$\overline{BW}_3$(3)	$\overline{BW}_4$(3)
READ	H	X	X	X	X
WRITE ALL BYTES	L	L	L	L	L
WRITE BYTE 1 (I/O[0:7], I/O_{P1})(2)	L	L	H	H	H
WRITE BYTE 2 (I/O[8:15], I/O_{P2})(2)	L	H	L	H	H
WRITE BYTE 3 (I/O[16:23], I/O_{P3})(2,3)	L	H	H	L	H
WRITE BYTE 4 (I/O[24:31], I/O_{P4})(2,3)	L	H	H	H	L
NO WRITE	L	H	H	H	H

5313 tbl 09

NOTES:
1. L = V_{IL}, H = V_{IH}, X = Don't Care.
2. Multiple bytes may be selected during the same cycle.
3. N/A for X18 configuration.

Interleaved Burst Sequence Table ($\overline{LBO}$=VDD)

	Sequence 1		Sequence 2		Sequence 3		Sequence 4	
	A1	A0	A1	A0	A1	A0	A1	A0
First Address	0	0	0	1	1	0	1	1
Second Address	0	1	0	0	1	1	1	0
Third Address	1	0	1	1	0	0	0	1
Fourth Address(1)	1	1	1	0	0	1	0	0

5313 tbl 10

NOTE:
1. Upon completion of the Burst sequence the counter wraps around to its initial state and continues counting.

Linear Burst Sequence Table ($\overline{LBO}$=VSS)

	Sequence 1		Sequence 2		Sequence 3		Sequence 4	
	A1	A0	A1	A0	A1	A0	A1	A0
First Address	0	0	0	1	1	0	1	1
Second Address	0	1	1	0	1	1	0	0
Third Address	1	0	1	1	0	0	0	1
Fourth Address(1)	1	1	0	0	0	1	1	0

5313 tbl 11

NOTE:
1. Upon completion of the Burst sequence the counter wraps around to its initial state and continues counting.

Functional Timing Diagram(1)

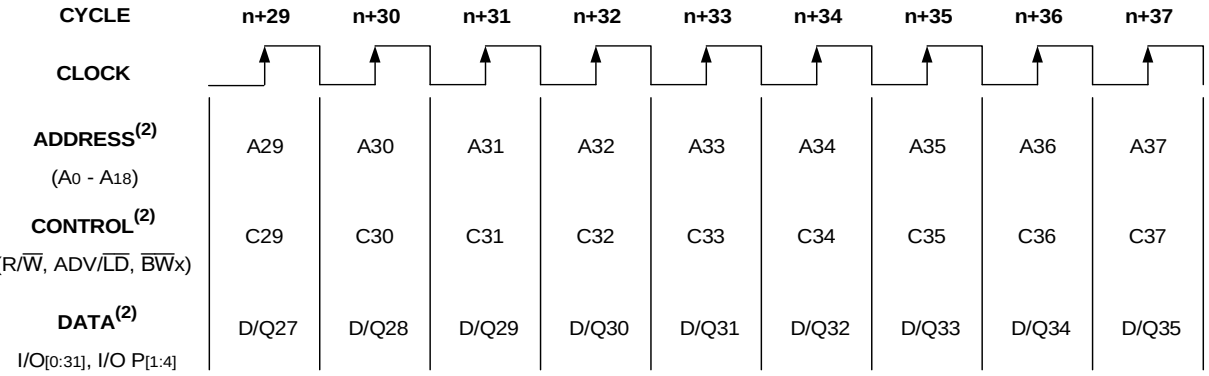

5313drw 03

NOTES:
1. This assumes $\overline{CEN}$, $\overline{CE}_1$, CE_2, $\overline{CE}_2$ are all true.
2. All Address, Control and Data_In are only required to meet set-up and hold time with respect to the rising edge of clock. Data_Out is valid after a clock-to-data delay from the rising edge of clock.

Device Operation - Showing Mixed Load, Burst, Deselect and NOOP Cycles(2)

Cycle	Address	R/$\overline{W}$	ADV/$\overline{LD}$	$\overline{CE}$(1)	$\overline{CEN}$	$\overline{BW}$x	$\overline{OE}$	I/O	Comments
n	A_0	H	L	L	L	X	X	X	Load read
n+1	X	X	H	X	L	X	X	X	Burst read
n+2	A_1	H	L	L	L	X	L	Q_0	Load read
n+3	X	X	L	H	L	X	L	Q_{0+1}	Deselect or STOP
n+4	X	X	H	X	L	X	L	Q_1	NOOP
n+5	A_2	H	L	L	L	X	X	Z	Load read
n+6	X	X	H	X	L	X	X	Z	Burst read
n+7	X	X	L	H	L	X	L	Q_2	Deselect or STOP
n+8	A_3	L	L	L	L	L	L	Q_{2+1}	Load write
n+9	X	X	H	X	L	L	X	Z	Burst write
n+10	A_4	L	L	L	L	L	X	D_3	Load write
n+11	X	X	L	H	L	X	X	D_{3+1}	Deselect or STOP
n+12	X	X	H	X	L	X	X	D_4	NOOP
n+13	A_5	L	L	L	L	L	X	Z	Load write
n+14	A_6	H	L	L	L	X	X	Z	Load read
n+15	A_7	L	L	L	L	L	X	D_5	Load write
n+16	X	X	H	X	L	L	L	Q_6	Burst write
n+17	A_8	H	L	L	L	X	X	D_7	Load read
n+18	X	X	H	X	L	X	X	D_{7+1}	Burst read
n+19	A_9	L	L	L	L	L	L	Q_8	Load write

5313 tbl 12

NOTES:
1. $\overline{CE}$ = L is defined as $\overline{CE}_1$ = L, $\overline{CE}_2$ = L and CE_2 = H. $\overline{CE}$ = H is defined as $\overline{CE}_1$ = H, $\overline{CE}_2$ = H or CE_2 = L.
2. H = High; L = Low; X = Don't Care; Z = High Impedance.

Read Operation(1)

Cycle	Address	R/$\overline{W}$	ADV/$\overline{LD}$	$\overline{CE}$(2)	$\overline{CEN}$	$\overline{BW}$x	$\overline{OE}$	I/O	Comments
n	A_0	H	L	L	L	X	X	X	Address and Control meet setup
n+1	X	X	X	X	L	X	X	X	Clock Setup Valid
n+2	X	X	X	X	X	X	L	Q_0	Contents of Address A_0 Read Out

5313 tbl 13

NOTES:
1. H = High; L = Low; X = Don't Care; Z = High Impedance.
2. $\overline{CE}$ = L is defined as $\overline{CE}_1$ = L, $\overline{CE}_2$ = L and CE_2 = H. $\overline{CE}$ = H is defined as $\overline{CE}_1$ = H, $\overline{CE}_2$ = H or CE_2 = L.

Burst Read Operation(1)

Cycle	Address	R/$\overline{W}$	ADV/$\overline{LD}$	$\overline{CE}$(2)	$\overline{CEN}$	$\overline{BW}$x	$\overline{OE}$	I/O	Comments
n	A_0	H	L	L	L	X	X	X	Address and Control meet setup
n+1	X	X	H	X	L	X	X	X	Clock Setup Valid, Advance Counter
n+2	X	X	H	X	L	X	L	Q_0	Address A_0 Read Out, Inc. Count
n+3	X	X	H	X	L	X	L	Q_{0+1}	Address A_{0+1} Read Out, Inc. Count
n+4	X	X	H	X	L	X	L	Q_{0+2}	Address A_{0+2} Read Out, Inc. Count
n+5	A_1	H	L	L	L	X	L	Q_{0+3}	Address A_{0+3} Read Out, Load A_1
n+6	X	X	H	X	L	X	L	Q_0	Address A_0 Read Out, Inc. Count
n+7	X	X	H	X	L	X	L	Q_1	Address A_1 Read Out, Inc. Count
n+8	A_2	H	L	L	L	X	L	Q_{1+1}	Address A_{1+1} Read Out, Load A_2

5313 tbl 14

NOTES:
1. H = High; L = Low; X = Don't Care; Z = High Impedance.
2. $\overline{CE}$ = L is defined as $\overline{CE}_1$ = L, $\overline{CE}_2$ = L and CE_2 = H. $\overline{CE}$ = H is defined as $\overline{CE}_1$ = H, $\overline{CE}_2$ = H or CE_2 = L.

Write Operation(1)

Cycle	Address	R/$\overline{W}$	ADV/$\overline{LD}$	$\overline{CE}$(2)	$\overline{CEN}$	$\overline{BW}$x	$\overline{OE}$	I/O	Comments
n	A_0	L	L	L	L	L	X	X	Address and Control meet setup
n+1	X	X	X	X	L	X	X	X	Clock Setup Valid
n+2	X	X	X	X	L	X	X	D_0	Write to Address A_0

5313 tbl 15

NOTES:
1. H = High; L = Low; X = Don't Care; Z = High Impedance.
2. $\overline{CE}$ = L is defined as $\overline{CE}_1$ = L, $\overline{CE}_2$ = L and CE_2 = H. $\overline{CE}$ = H is defined as $\overline{CE}_1$ = H, $\overline{CE}_2$ = H or CE_2 = L.

Burst Write Operation(1)

Cycle	Address	R/$\overline{W}$	ADV/$\overline{LD}$	$\overline{CE}$(2)	$\overline{CEN}$	$\overline{BW}$x	$\overline{OE}$	I/O	Comments
n	A_0	L	L	L	L	L	X	X	Address and Control meet setup
n+1	X	X	H	X	L	L	X	X	Clock Setup Valid, Inc. Count
n+2	X	X	H	X	L	L	X	D_0	Address A_0 Write, Inc. Count
n+3	X	X	H	X	L	L	X	D_{0+1}	Address A_{0+1} Write, Inc. Count
n+4	X	X	H	X	L	L	X	D_{0+2}	Address A_{0+2} Write, Inc. Count
n+5	A_1	L	L	L	L	L	X	D_{0+3}	Address A_{0+3} Write, Load A_1
n+6	X	X	H	X	L	L	X	D_0	Address A_0 Write, Inc. Count
n+7	X	X	H	X	L	L	X	D_1	Address A_1 Write, Inc. Count
n+8	A_2	L	L	L	L	L	X	D_{1+1}	Address A_{1+1} Write, Load A_2

5313 tbl 16

NOTES:
1. H = High; L = Low; X = Don't Care; Z = High Impedance.
2. $\overline{CE}$ = L is defined as $\overline{CE}_1$ = L, $\overline{CE}_2$ = L and CE_2 = H. $\overline{CE}$ = H is defined as $\overline{CE}_1$ = H, $\overline{CE}_2$ = H or CE_2 = L.

Read Operation with Clock Enable Used(1)

Cycle	Address	R/$\overline{W}$	ADV/$\overline{LD}$	$\overline{CE}$(2)	$\overline{CEN}$	$\overline{BWx}$	$\overline{OE}$	I/O	Comments
n	A_0	H	L	L	L	X	X	X	Address and Control meet setup
n+1	X	X	X	X	H	X	X	X	Clock n+1 Ignored
n+2	A_1	H	L	L	L	X	X	X	Clock Valid
n+3	X	X	X	X	H	X	L	Q_0	Clock Ignored. Data Q_0 is on the bus.
n+4	X	X	X	X	H	X	L	Q_0	Clock Ignored. Data Q_0 is on the bus.
n+5	A_2	H	L	L	L	X	L	Q_0	Address A_0 Read out (bus trans.)
n+6	A_3	H	L	L	L	X	L	Q_1	Address A_1 Read out (bus trans.)
n+7	A_4	H	L	L	L	X	L	Q_2	Address A_2 Read out (bus trans.)

5313 tbl 17

NOTES:
1. H = High; L = Low; X = Don't Care; Z = High Impedance.
2. $\overline{CE}$ = L is defined as $\overline{CE}_1$ = L, $\overline{CE}_2$ = L and CE_2 = H. $\overline{CE}$ = H is defined as $\overline{CE}_1$ = H, $\overline{CE}_2$ = H or CE_2 = L.

Write Operation with Clock Enable Used(1)

Cycle	Address	R/$\overline{W}$	ADV/$\overline{LD}$	$\overline{CE}$(2)	$\overline{CEN}$	$\overline{BWx}$	$\overline{OE}$	I/O	Comments
n	A_0	L	L	L	L	L	X	X	Address and Control meet setup.
n+1	X	X	X	X	H	X	X	X	Clock n+1 Ignored.
n+2	A_1	L	L	L	L	L	X	X	Clock Valid.
n+3	X	X	X	X	H	X	X	X	Clock Ignored.
n+4	X	X	X	X	H	X	X	X	Clock Ignored.
n+5	A_2	L	L	L	L	L	X	D_0	Write Data D_0
n+6	A_3	L	L	L	L	L	X	D_1	Write Data D_1
n+7	A_4	L	L	L	L	L	X	D_2	Write Data D_2

5313 tbl 18

NOTES:
1. H = High; L = Low; X = Don't Care; Z = High Impedance.
2. $\overline{CE}$ = L is defined as $\overline{CE}_1$ = L, $\overline{CE}_2$ = L and CE_2 = H. $\overline{CE}$ = H is defined as $\overline{CE}_1$ = H, $\overline{CE}_2$ = H or CE_2 = L.

Read Operation with Chip Enable Used(1)

Cycle	Address	R/$\overline{W}$	ADV/$\overline{LD}$	$\overline{CE}$(2)	$\overline{CEN}$	$\overline{BWx}$	$\overline{OE}$	I/O(3)	Comments
n	X	X	L	H	L	X	X	?	Deselected.
n+1	X	X	L	H	L	X	X	?	Deselected.
n+2	A_0	H	L	L	L	X	X	Z	Address and Control meet setup.
n+3	X	X	L	H	L	X	X	Z	Deselected or STOP.
n+4	A_1	H	L	L	L	X	L	Q_0	Address A_0 Read out. Load A_1.
n+5	X	X	L	H	L	X	X	Z	Deselected or STOP.
n+6	X	X	L	H	L	X	L	Q_1	Address A_1 Read out. Deselected.
n+7	A_2	H	L	L	L	X	X	Z	Address and control meet setup.
n+8	X	X	L	H	L	X	X	Z	Deselected or STOP.
n+9	X	X	L	H	L	X	L	Q_2	Address A_2 Read out. Deselected.

5313 tbl 19

NOTES:
1. H = High; L = Low; X = Don't Care; ? = Don't Know; Z = High Impedance.
2. $\overline{CE}$ = L is defined as $\overline{CE_1}$ = L, $\overline{CE_2}$ = L and CE_2 = H. $\overline{CE}$ = H is defined as $\overline{CE_1}$ = H, $\overline{CE_2}$ = H or CE_2 = L.
3. Device Outputs are ensured to be in High-Z after the first rising edge of clock upon power-up.

Write Operation with Chip Enable Used(1)

Cycle	Address	R/$\overline{W}$	ADV/$\overline{LD}$	$\overline{CE}$(2)	$\overline{CEN}$	$\overline{BWx}$	$\overline{OE}$	I/O	Comments
n	X	X	L	H	L	X	X	?	Deselected.
n+1	X	X	L	H	L	X	X	?	Deselected.
n+2	A_0	L	L	L	L	L	X	Z	Address and Control meet setup.
n+3	X	X	L	H	L	X	X	Z	Deselected or STOP.
n+4	A_1	L	L	L	L	L	X	D_0	Address D_0 Write in. Load A_1.
n+5	X	X	L	H	L	X	X	Z	Deselected or STOP.
n+6	X	X	L	H	L	X	X	D_1	Address D_1 Write in. Deselected.
n+7	A_2	L	L	L	L	L	X	Z	Address and control meet setup.
n+8	X	X	L	H	L	X	X	Z	Deselected or STOP.
n+9	X	X	L	H	L	X	X	D_2	Address D_2 Write in. Deselected.

5313 tbl 20

NOTES:
1. H = High; L = Low; X = Don't Care; ? = Don't Know; Z = High Impedance.
2. $\overline{CE}$ = L is defined as $\overline{CE_1}$ = L, $\overline{CE_2}$ = L and CE_2 = H. $\overline{CE}$ = H is defined as $\overline{CE_1}$ = H, $\overline{CE_2}$ = H or CE_2 = L.

DC Electrical Characteristics Over the Operating Temperature and Supply Voltage Range (V_{DD} = 2.5V±5%)

Symbol	Parameter	Test Conditions	Min.	Max.	Unit
$\|I_{LI}\|$	Input Leakage Current	V_{DD} = Max., V_{IN} = 0V to V_{DD}	—	5	µA
$\|I_{LI}\|$	$\overline{LBO}$, JTAG and ZZ Input Leakage Current (1)	V_{DD} = Max., V_{IN} = 0V to V_{DD}	—	30	µA
$\|I_{LO}\|$	Output Leakage Current	V_{OUT} = 0V to V_{DDQ}, Device Deselected	—	5	µA
V_{OL}	Output Low Voltage	I_{OL} = +6mA, V_{DD} = Min.	—	0.4	V
V_{OH}	Output High Voltage	I_{OH} = -6mA, V_{DD} = Min.	2.0	—	V

5313 tbl 21

NOTE:
1. The $\overline{LBO}$, TMS, TDI, TCK and $\overline{TRST}$ pins will be internally pulled to V_{DD}, and the ZZ pin will be internally pulled to V_{SS} if they are not actively driven in the application.

DC Electrical Characteristics Over the Operating Temperature and Supply Voltage Range(1) (V_{DD} = 2.5V±5%)

Symbol	Parameter	Test Conditions	200MHz(4)		166MHz		150MHz		133MHz		100MHz		Unit
			Com'l	Ind	Com'l	Ind	Com'l	Ind	Com'l	Ind	Com'l	Ind	
I_{DD}	Operating Power Supply Current	Device Selected, Outputs Open, ADV/$\overline{LD}$ = X, V_{DD} = Max., $V_{IN} \geq V_{IH}$ or $\leq V_{IL}$, f = f_{MAX}(2)	275	295	245	265	215	235	195	215	175	195	mA
I_{SB1}	CMOS Standby Power Supply Current	Device Deselected, Outputs Open, V_{DD} = Max., $V_{IN} \geq V_{HD}$ or $\leq V_{LD}$, f = 0(2,3)	40	60	40	60	40	60	40	60	40	60	mA
I_{SB2}	Clock Running Power Supply Current	Device Deselected, Outputs Open, V_{DD} = Max., $V_{IN} \geq V_{HD}$ or $\leq V_{LD}$, f = f_{MAX}(2,3)	80	100	70	90	60	80	50	70	45	65	mA
I_{SB3}	Idle Power Supply Current	Device Selected, Outputs Open, $\overline{CEN} \geq V_{IH}$, V_{DD} = Max., $V_{IN} \geq V_{HD}$ or $\leq V_{LD}$, f = f_{MAX}(2,3)	60	80	60	80	60	80	60	80	60	80	mA
I_{ZZ}	Full Sleep Mode Supply Current	Device Selected, Outputs Open, $\overline{CEN} \leq V_{IH}$, V_{DD} = Max., $V_{IN} \geq V_{HD}$ or $\leq V_{LD}$, f = f_{MAX}(2,3), ZZ $\geq V_{HD}$	40	60	40	60	40	60	40	60	40	60	mA

5313 tbl 22

NOTES:
1. All values are maximum guaranteed values.
2. At f = f_{MAX}, inputs are cycling at the maximum frequency of read cycles of 1/t_{CYC}; f=0 means no input lines are changing.
3. For I/Os V_{HD} = V_{DDQ} – 0.2V, V_{LD} = 0.2V. For other inputs V_{HD} = V_{DD} – 0.2V, V_{LD} = 0.2V.
4. 200MHz is for 71T75802 only.

AC Test Load

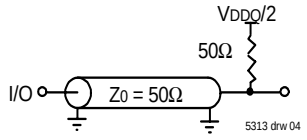

Figure 1. AC Test Load

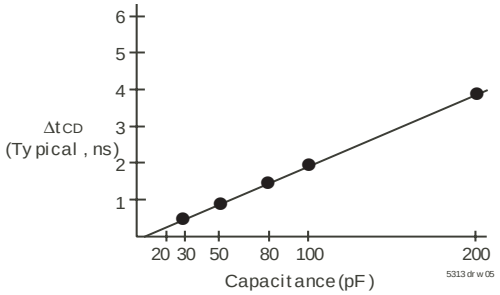

Figure 2. Lumped Capacitive Load, Typical Derating

AC Test Conditions

Input Pulse Levels	0 to 2.5V
Input Rise/Fall Times	2ns
Input Timing Reference Levels	(V_{DDQ}/2)
Output Timing Reference Levels	(V_{DDQ}/2)
AC Test Load	See Figure 1

5313 tbl 23

AC Electrical Characteristics

(VDD = 2.5V +/-5%, Commercial and Industrial Temperature Ranges)

Symbol	Parameter	200MHz(6)		166MHz		150MHz		133MHz		100MHz		Unit
		Min.	Max.	Min.	Max.	Min.	Max.	Min.	Max.	Min.	Max.	
t_{CYC}	Clock Cycle Time	5	—	6	—	6.7	—	7.5	—	10	—	ns
t_F(1)	Clock Frequency	—	200	—	166	—	150	—	133	—	100	MHz
t_{CH}(2)	Clock High Pulse Width	1.8	—	1.8	—	2.0	—	2.2	—	3.2	—	ns
t_{CL}(2)	Clock Low Pulse Width	1.8	—	1.8	—	2.0	—	2.2	—	3.2	—	ns
Output Parameters												
t_{CD}	Clock High to Valid Data	—	3.2	—	3.5	—	3.8	—	4.2	—	5	ns
t_{CDC}	Clock High to Data Change	1.0	—	1.0	—	1.5	—	1.5	—	1.5	—	ns
t_{CLZ}(3,4,5)	Clock High to Output Active	1.0	—	1.0	—	1.5	—	1.5	—	1.5	—	ns
t_{CHZ}(3,4,5)	Clock High to Data High-Z	1.0	3	1.0	3	1.5	3	1.5	3	1.5	3.3	ns
t_{OE}	Output Enable Access Time	—	3.2	—	3.5	—	3.8	—	4.2	—	5	ns
t_{OLZ}(3,4)	Output Enable Low to Data Active	0	—	0	—	0	—	0	—	0	—	ns
t_{OHZ}(3,4)	Output Enable High to Data High-Z	—	3.2	—	3.5	—	3.8	—	4.2	—	5	ns
Set Up Times												
t_{SE}	Clock Enable Setup Time	1.4	—	1.5	—	1.5	—	1.7	—	2.0	—	ns
t_{SA}	Address Setup Time	1.4	—	1.5	—	1.5	—	1.7	—	2.0	—	ns
t_{SD}	Data In Setup Time	1.4	—	1.5	—	1.5	—	1.7	—	2.0	—	ns
t_{SW}	Read/Write (R/$\overline{W}$) Setup Time	1.4	—	1.5	—	1.5	—	1.7	—	2.0	—	ns
t_{SADV}	Advance/Load (ADV/$\overline{LD}$) Setup Time	1.4	—	1.5	—	1.5	—	1.7	—	2.0	—	ns
t_{SC}	Chip Enable/Select Setup Time	1.4	—	1.5	—	1.5	—	1.7	—	2.0	—	ns
t_{SB}	Byte Write Enable ($\overline{BW}$x) Setup Time	1.4	—	1.5	—	1.5	—	1.7	—	2.0	—	ns
Hold Times												
t_{HE}	Clock Enable Hold Time	0.4	—	0.5	—	0.5	—	0.5	—	0.5	—	ns
t_{HA}	Address Hold Time	0.4	—	0.5	—	0.5	—	0.5	—	0.5	—	ns
t_{HD}	Data In Hold Time	0.4	—	0.5	—	0.5	—	0.5	—	0.5	—	ns
t_{HW}	Read/Write (R/$\overline{W}$) Hold Time	0.4	—	0.5	—	0.5	—	0.5	—	0.5	—	ns
t_{HADV}	Advance/Load (ADV/$\overline{LD}$) Hold Time	0.4	—	0.5	—	0.5	—	0.5	—	0.5	—	ns
t_{HC}	Chip Enable/Select Hold Time	0.4	—	0.5	—	0.5	—	0.5	—	0.5	—	ns
t_{HB}	Byte Write Enable ($\overline{BW}$x) Hold Time	0.4	—	0.5	—	0.5	—	0.5	—	0.5	—	ns

5313 tbl 24

NOTES:

1. tF = 1/tCYC.
2. Measured as HIGH above 0.6VDDQ and LOW below 0.4VDDQ.
3. Transition is measured ±200mV from steady-state.
4. These parameters are guaranteed with the AC load (Figure 1) by device characterization. They are not production tested.
5. To avoid bus contention, the output buffers are designed such that tCHZ (device turn-off) is faster than tCLZ (device turn-on) at a given temperature and voltage. The specs as shown do not imply bus contention because tCLZ is a Min. parameter that is worse case at totally different test conditions (0 deg. C, 2.625V) than tCHZ, which is a Max. parameter (worse case at 70 deg. C, 2.375V)
6. 200MHz is for 71T75802 only.

Timing Waveform of Read Cycle(1,2,3,4)

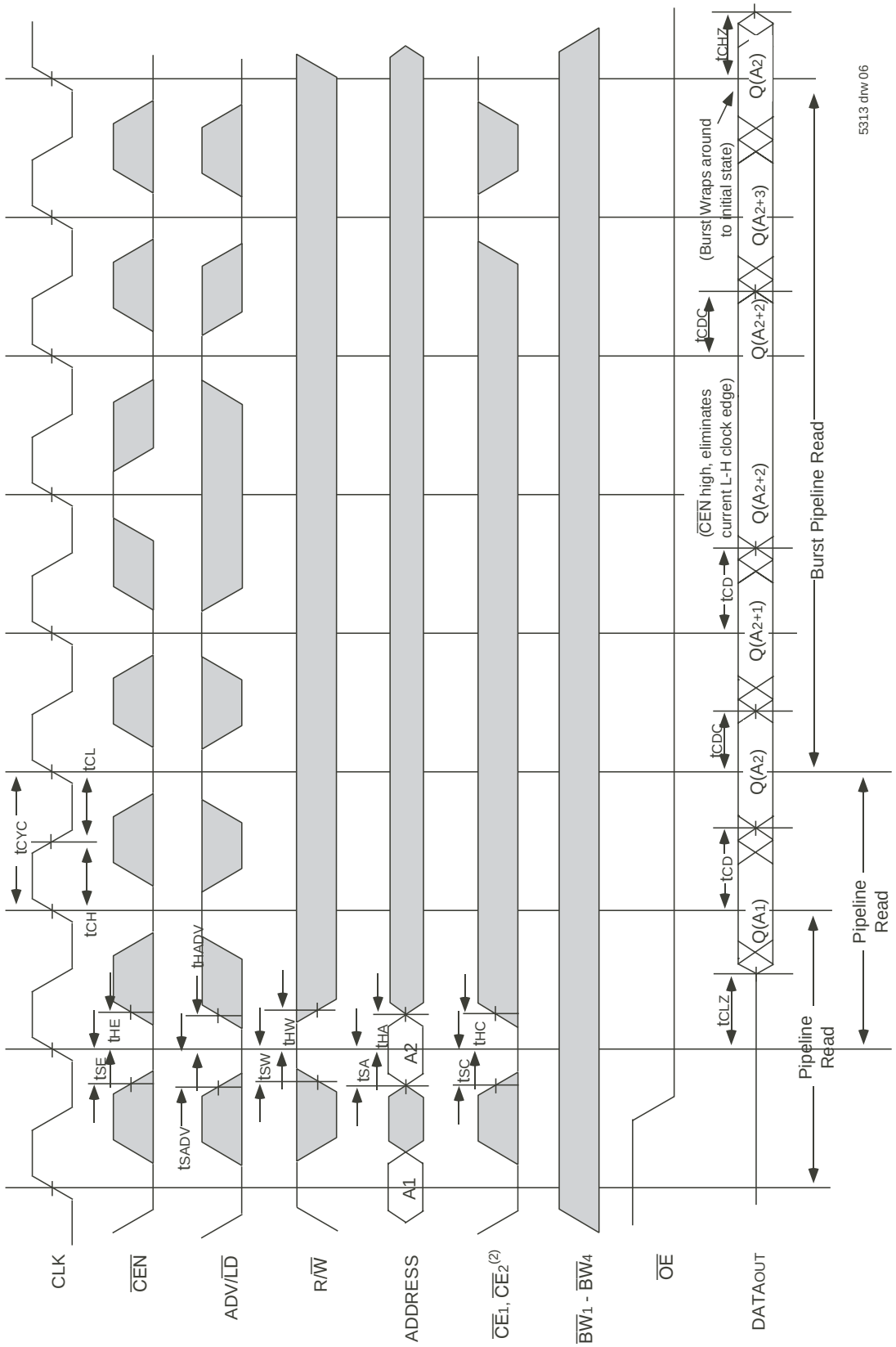

NOTES:

1. Q (A_1) represents the first output from the external address A_1. Q (A_2) represents the first output from the external address A_2; Q (A_{2+1}) represents the next output data in the burst sequence of the base address A_2, etc. where address bits A_0 and A_1 are advancing for the four word burst in the sequence defined by the state of the $\overline{LBO}$ input.
2. CE_2 timing transitions are identical but inverted to the $\overline{CE}_1$ and $\overline{CE}_2$ signals. For example, when $\overline{CE}_1$ and $\overline{CE}_2$ are LOW on this waveform, CE_2 is HIGH.
3. Burst ends when new address and control are loaded into the SRAM by sampling ADV/$\overline{LD}$ LOW.
4. R/$\overline{W}$ is don't care when the SRAM is bursting (ADV/$\overline{LD}$ sampled HIGH). The nature of the burst access (Read or Write) is fixed by the state of the R/$\overline{W}$ signal when new address and control are loaded into the SRAM.

Timing Waveform of Write Cycles(1,2,3,4,5)

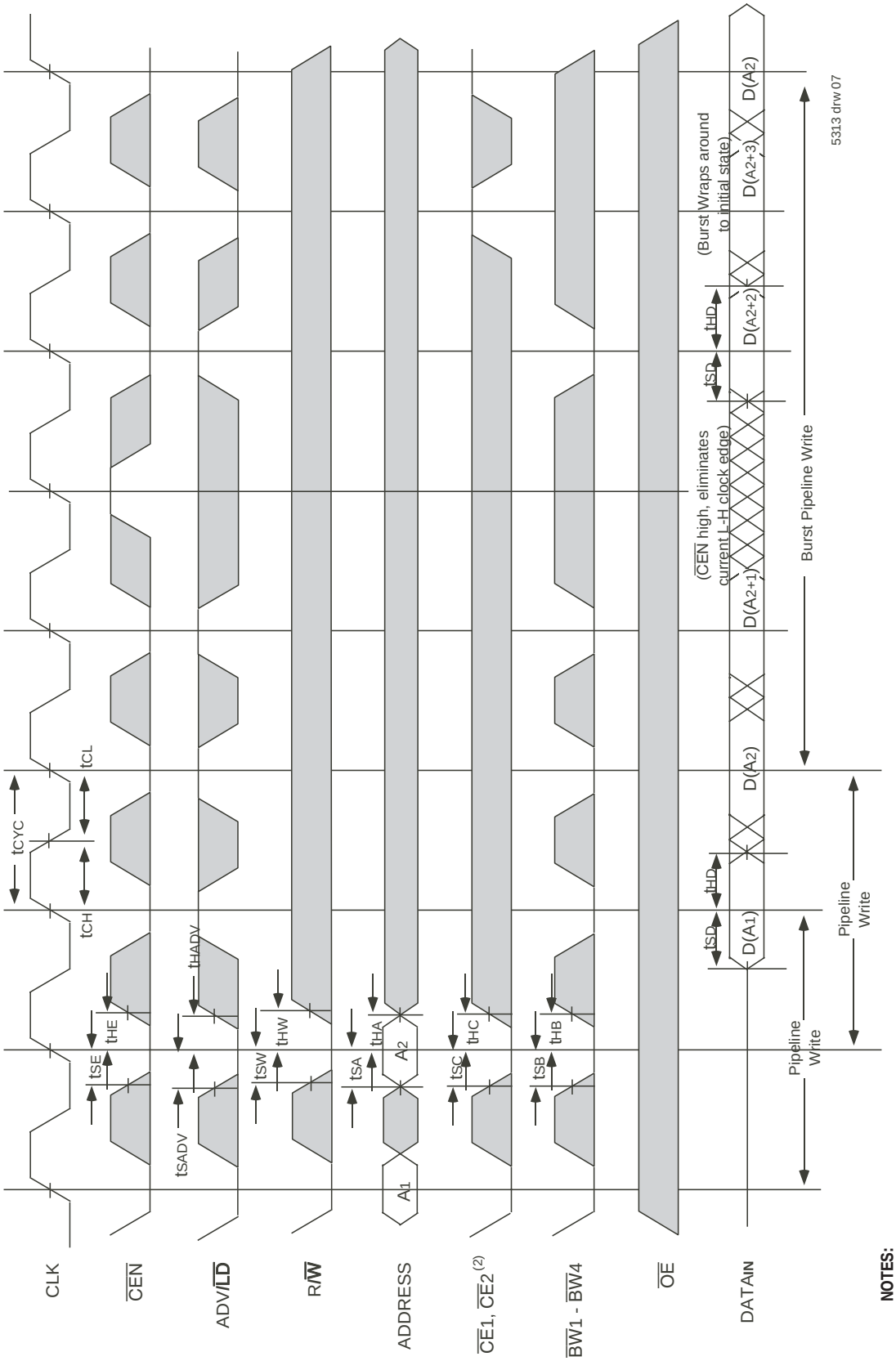

NOTES:

1. D (A_1) represents the first input to the external address A_1. D (A_2) represents the first input to the external address A_2; D (A_{2+1}) represents the next input data in the burst sequence of the base address A_2, etc. where address bits A_0 and A_1 are advancing for the four word burst in the sequence defined by the state of the $\overline{LBO}$ input.
2. CE_2 timing transitions are identical but inverted to the $\overline{CE}_1$ and $\overline{CE}_2$ signals. For example, when $\overline{CE}_1$ and $\overline{CE}_2$ are LOW on this waveform, CE_2 is HIGH.
3. Burst ends when new address and control are loaded into the SRAM by sampling ADV/$\overline{LD}$ LOW.
4. R/$\overline{W}$ is don't care when the SRAM is bursting (ADV/$\overline{LD}$ sampled HIGH). The nature of the burst access (Read or Write) is fixed by the state of the R/$\overline{W}$ signal when new address and control are loaded into the SRAM.
5. Individual Byte Write signals ($\overline{BW}$x) must be valid on all write and burst-write cycles. A write cycle is initiated when R/$\overline{W}$ signal is sampled LOW. The byte write information comes in two cycles before the actual data is presented to the SRAM.

Timing Waveform of Combined Read and Write Cycles(1,2,3)

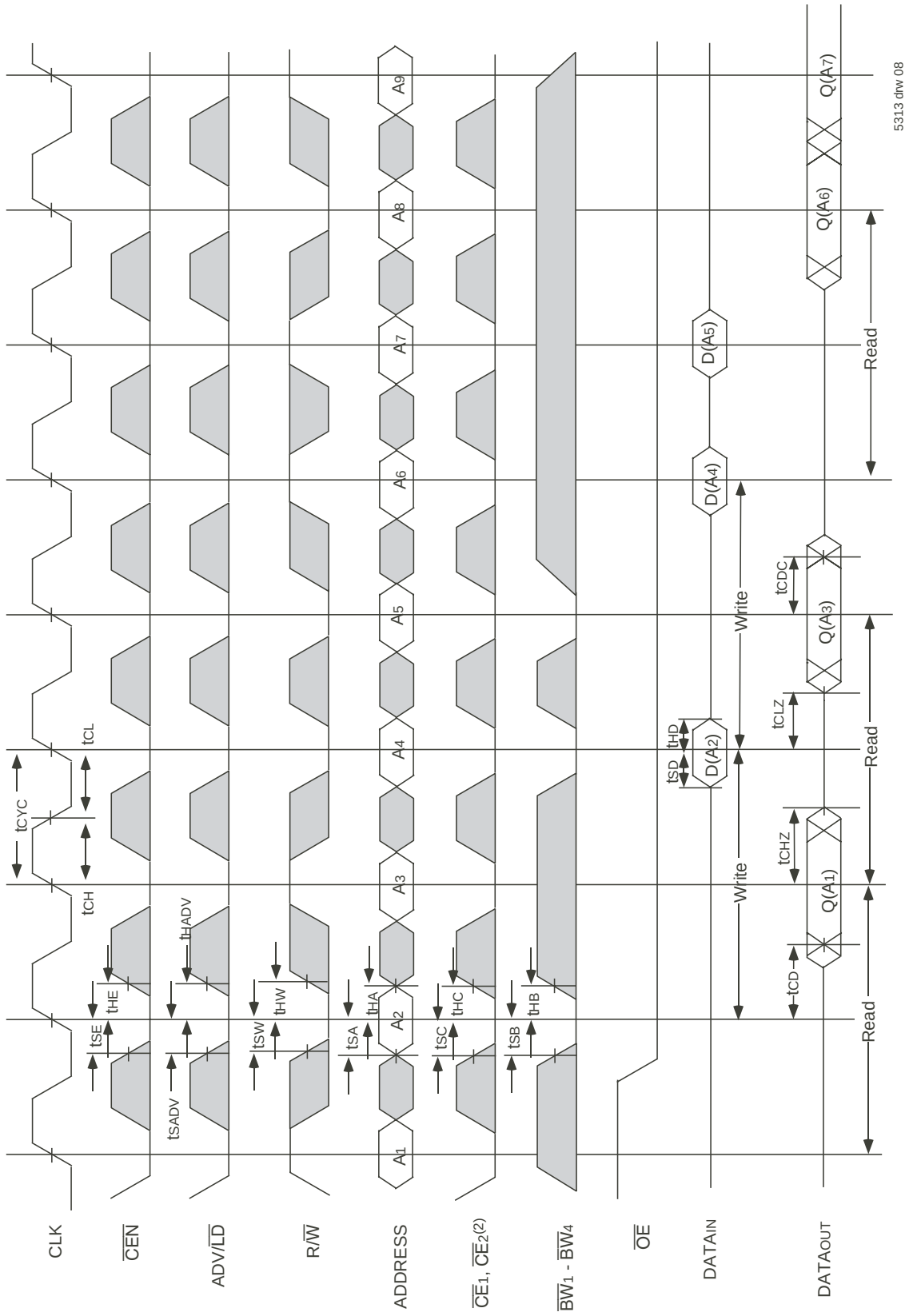

NOTES:
1. Q (A1) represents the first output from the external address A1. D (A2) represents the input data to the SRAM corresponding to address A2.
2. CE2 timing transitions are identical but inverted to the CE1 and CE2 signals. For example, when CE1 and CE2 are LOW on this waveform, CE2 is HIGH.
3. Individual Byte Write signals (BWx) must be valid on all write and burst-write cycles. A write cycle is initiated when R/W signal is sampled LOW. The byte write information comes in two cycles before the actual data is presented to the SRAM.

Timing Waveform of $\overline{CEN}$ Operation(1,2,3,4)

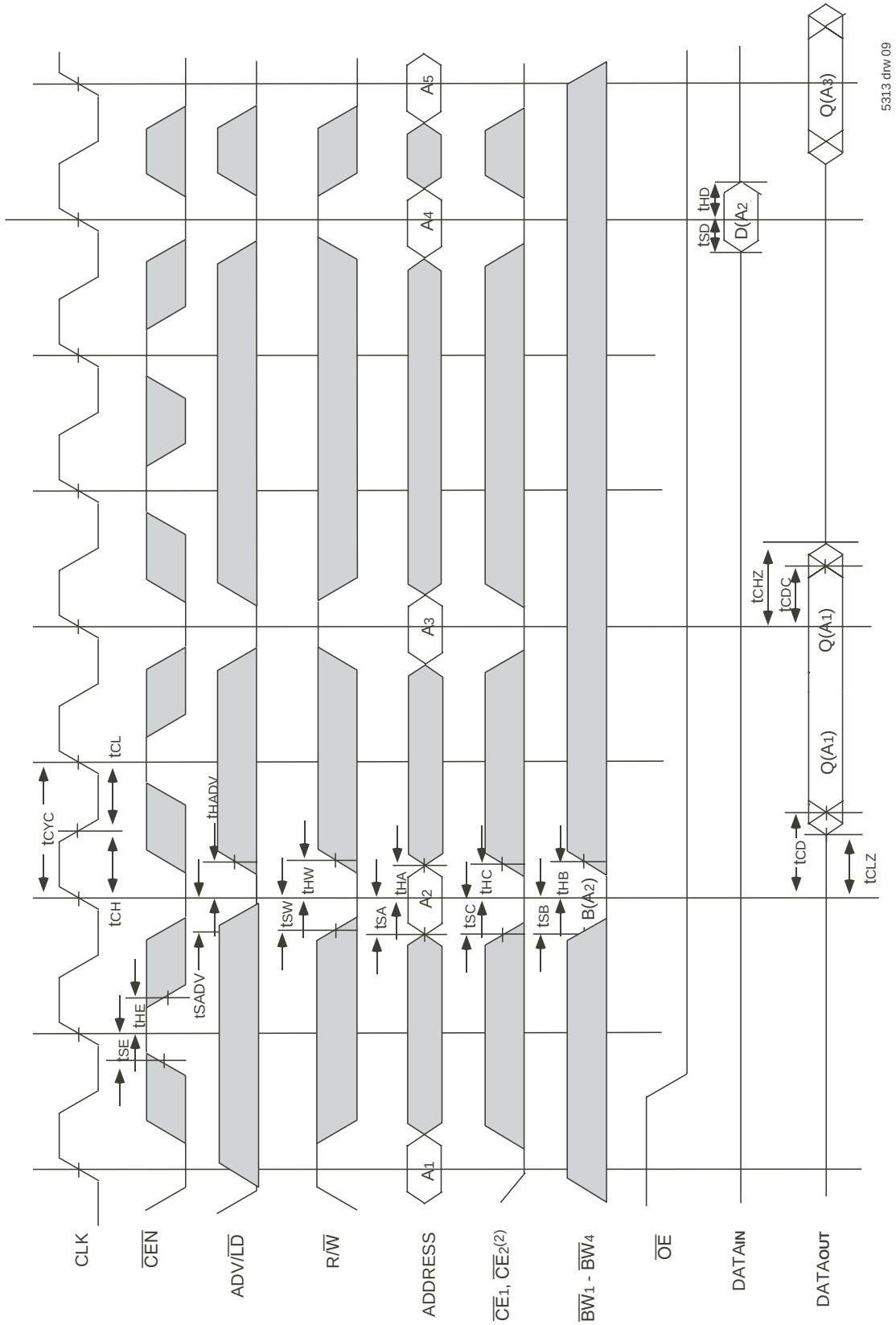

NOTES:
1. Q (A_1) represents the first output from the external address A_1. D (A_2) represents the input data to the SRAM corresponding to address A_2.
2. CE_2 timing transitions are identical but inverted to the $\overline{CE}_1$ and $\overline{CE}_2$ signals. For example, when $\overline{CE}_1$ and $\overline{CE}_2$ are LOW on this waveform, CE_2 is HIGH.
3. $\overline{CEN}$ when sampled high on the rising edge of clock will block that L-H transition of the clock from propagating into the SRAM. The part will behave as if the L-H clock transition did not occur. All internal registers in the SRAM will retain their previous state.
4. Individual Byte Write signals ($\overline{BWx}$) must be valid on all write and burst-write cycles. A write cycle is initiated when R/$\overline{W}$ signal is sampled LOW. The byte write information comes in two cycles before the actual data is presented to the SRAM.

Timing Waveform of $\overline{CS}$ Operation(1,2,3,4)

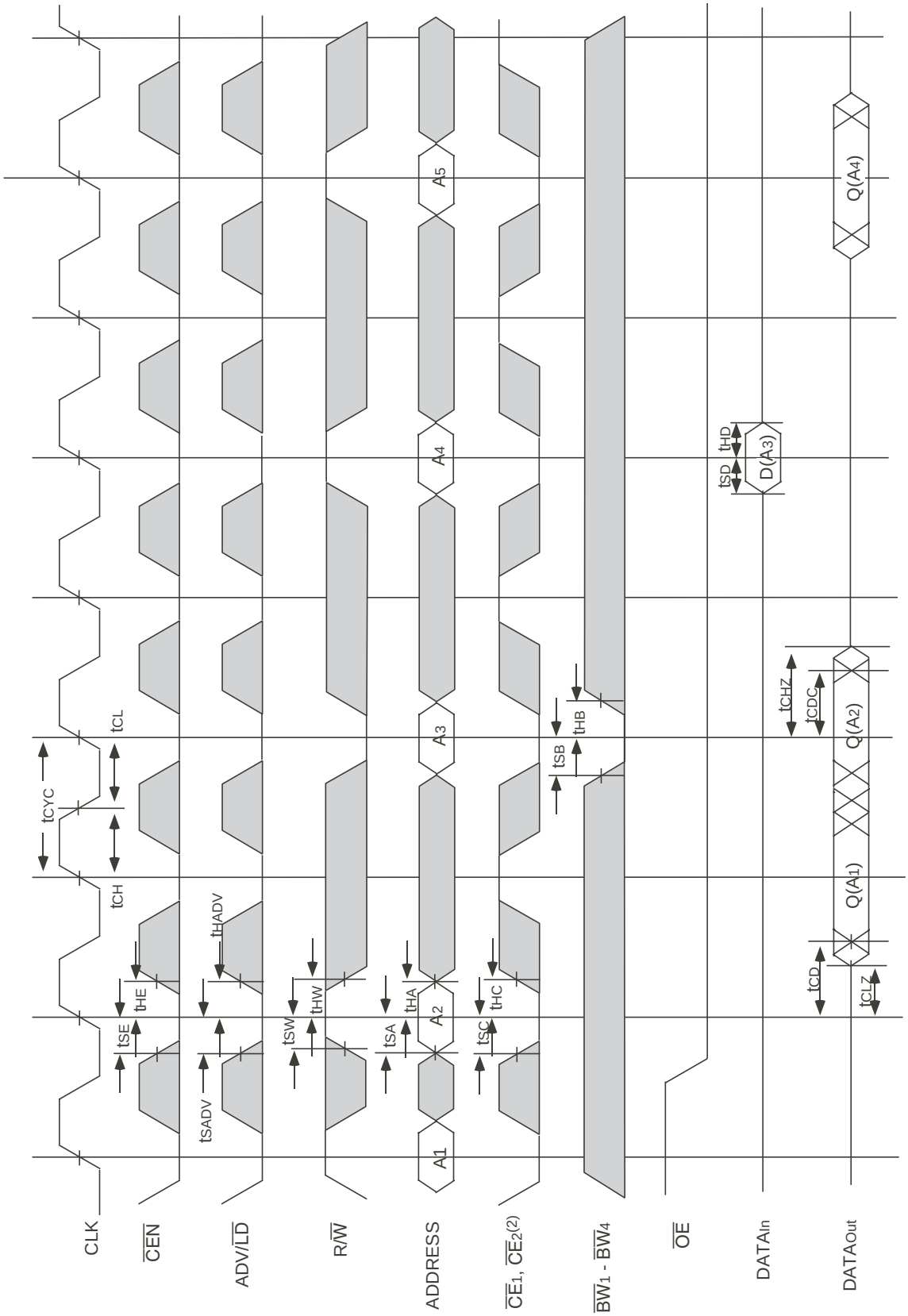

NOTES:

1. Q (A_1) represents the first output from the external address A_1. D (A_3) represents the input data to the SRAM corresponding to address A_3.
2. CE_2 timing transitions are identical but inverted to the $\overline{CE_1}$ and $\overline{CE_2}$ signals. For example, when $\overline{CE_1}$ and $\overline{CE_2}$ are LOW on this waveform, CE_2 is HIGH.
3. $\overline{CEN}$ when sampled high on the rising edge of clock will block that L-H transition of the clock from propagating into the SRAM. The part will behave as if the L-H clock transition did not occur. All internal registers in the SRAM will retain their previous state.
4. Individual Byte Write signals ($\overline{BW}$x) must be valid on all write and burst-write cycles. A write cycle is initiated when R/$\overline{W}$ signal is sampled LOW. The byte write information comes in two cycles before the actual data is presented to the SRAM.

JTAG Interface Specification

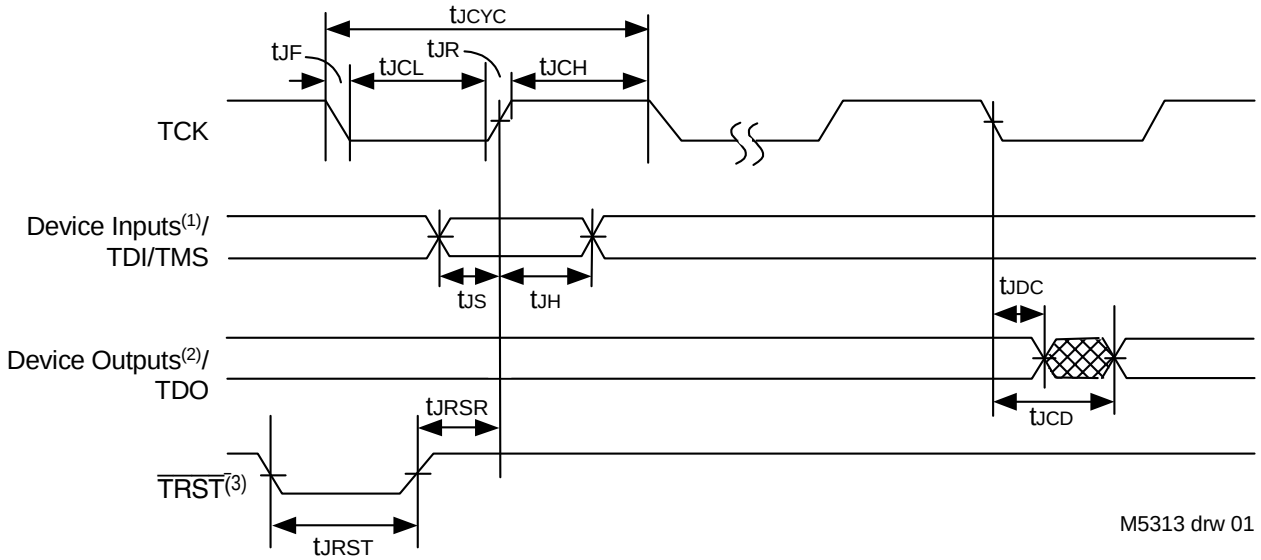

NOTES:
1. Device inputs = All device inputs except TDI, TMS and $\overline{TRST}$.
2. Device outputs = All device outputs except TDO.
3. During power up, $\overline{TRST}$ could be driven low or not be used since the JTAG circuit resets automatically. $\overline{TRST}$ is an optional JTAG reset.

JTAG AC Electrical Characteristics(1,2,3,4)

Symbol	Parameter	Min.	Max.	Units
t_{JCYC}	JTAG Clock Input Period	100	—	ns
t_{JCH}	JTAG Clock HIGH	40	—	ns
t_{JCL}	JTAG Clock Low	40	—	ns
t_{JR}	JTAG Clock Rise Time	—	5(1)	ns
t_{JF}	JTAG Clock Fall Time	—	5(1)	ns
t_{JRST}	JTAG Reset	50	—	ns
t_{JRSR}	JTAG Reset Recovery	50	—	ns
t_{JCD}	JTAG Data Output	—	20	ns
t_{JDC}	JTAG Data Output Hold	0	—	ns
t_{JS}	JTAG Setup	25	—	ns
t_{JH}	JTAG Hold	25	—	ns

I5313 tbl 01

NOTES:

1. Guaranteed by design.
2. AC Test Load (Fig. 1) on external output signals.
3. Refer to AC Test Conditions stated earlier in this document.
4. JTAG operations occur at one speed (10MHz). The base device may run at any speed specified in this datasheet.

Scan Register Sizes

Register Name	Bit Size
Instruction (IR)	4
Bypass (BYR)	1
JTAG Identification (JIDR)	32
Boundary Scan (BSR)	Note (1)

I5313 tbl 03

NOTE:
1. The Boundary Scan Descriptive Language (BSDL) file for this device is available by contacting your local IDT sales representative.

JTAG Identification Register Definitions

Instruction Field	Value	Description
Revision Number (31:28)	0x2	Reserved for version number.
IDT Device ID (27:12)	0x220, 0x222	Defines IDT part number 71T75602 and 71T75802, respectively.
IDT JEDEC ID (11:1)	0x33	Allows unique identification of device vendor as IDT.
ID Register Indicator Bit (Bit 0)	1	Indicates the presence of an ID register.

I5313 tbl 02

Available JTAG Instructions

Instruction	Description	OPCODE
EXTEST	Forces contents of the boundary scan cells onto the device outputs(1). Places the boundary scan register (BSR) between TDI and TDO.	0000
SAMPLE/PRELOAD	Places the boundary scan register (BSR) between TDI and TDO. SAMPLE allows data from device inputs(2) and outputs(1) to be captured in the boundary scan cells and shifted serially through TDO. PRELOAD allows data to be input serially into the boundary scan cells via the TDI.	0001
DEVICE_ID	Loads the JTAG ID register (JIDR) with the vendor ID code and places the register between TDI and TDO.	0010
HIGHZ	Places the bypass register (BYR) between TDI and TDO. Forces all device output drivers to a High-Z state.	0011
RESERVED	Several combinations are reserved. Do not use codes other than those identified for EXTEST, SAMPLE/PRELOAD, DEVICE_ID, HIGHZ, CLAMP, VALIDATE and BYPASS instructions.	0100
RESERVED		0101
RESERVED		0110
RESERVED		0111
CLAMP	Uses BYR. Forces contents of the boundary scan cells onto the device outputs. Places the bypass register (BYR) between TDI and TDO.	1000
RESERVED	Same as above.	1001
RESERVED		1010
RESERVED		1011
RESERVED		1100
VALIDATE	Automatically loaded into the instruction register whenever the TAP controller passes through the CAPTURE-IR state. The lower two bits '01' are mandated by the IEEE std. 1149.1 specification.	1101
RESERVED	Same as above.	1110
BYPASS	The BYPASS instruction is used to truncate the boundary scan register as a single bit in length.	1111

I5313 tbl 04

NOTES:
1. Device outputs = All device outputs except TDO.
2. Device inputs = All device inputs except TDI, TMS, and $\overline{TRST}$.

Timing Waveform of $\overline{OE}$ Operation(1)

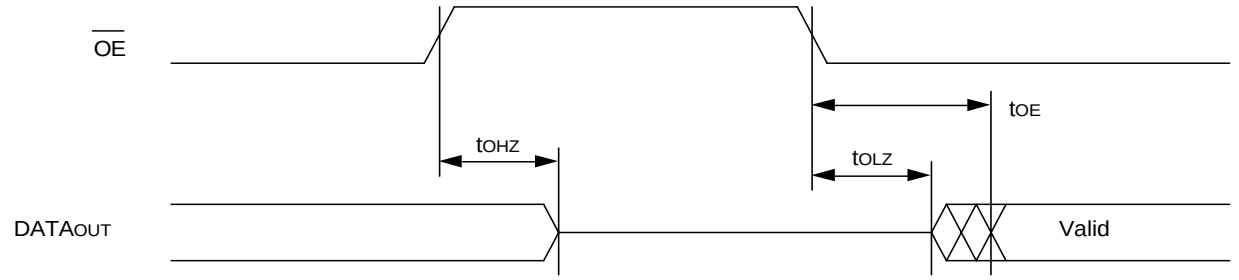

NOTE:
1. A read operation is assumed to be in progress.

5313 drw 11

Ordering Information

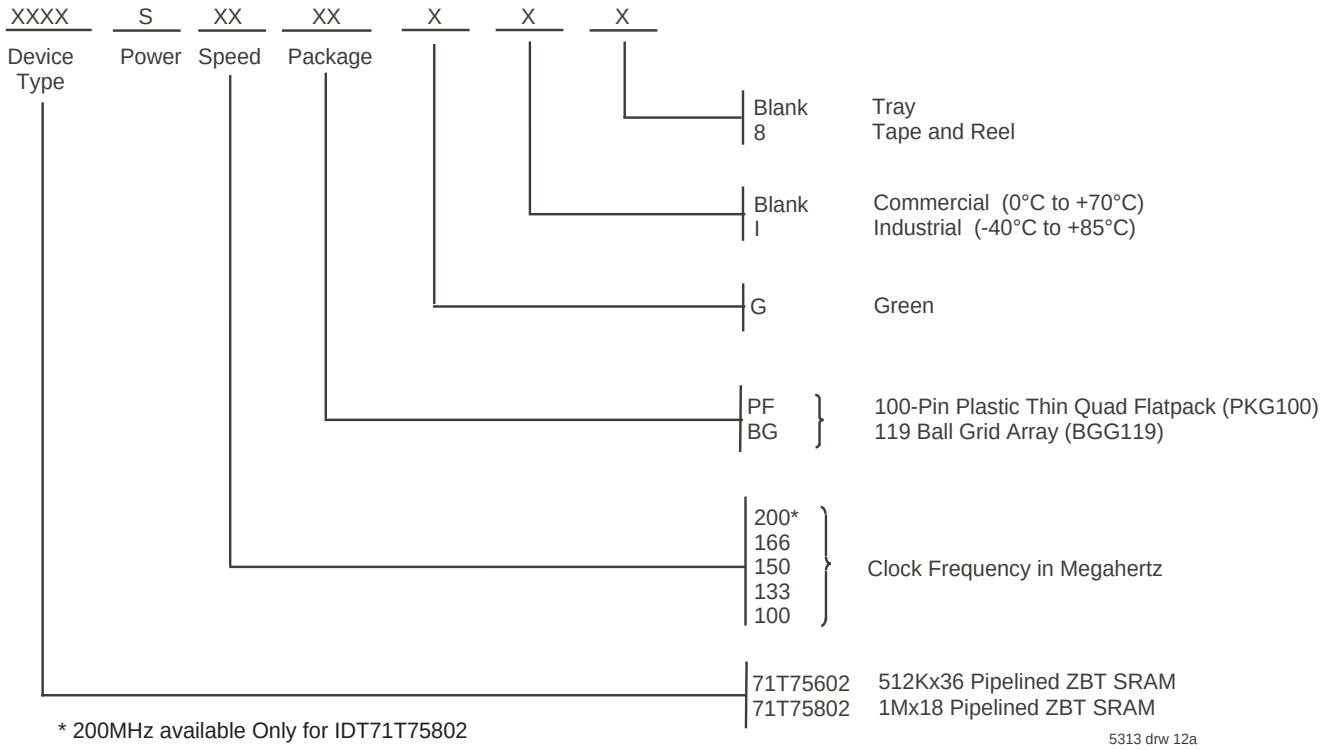

* 200MHz available Only for IDT71T75802

5313 drw 12a

Orderable Part Information

Speed (ns)	Orderable Part ID	Pkg. Code	Pkg. Type	Temp. Grade
100	71T75602S100BG	BG119	PBGA	C
	71T75602S100BG8	BG119	PBGA	C
	71T75602S100BGG	BGG119	PBGA	C
	71T75602S100BGG8	BGG119	PBGA	C
	71T75602S100BGGI	BGG119	PBGA	I
	71T75602S100BGGI8	BGG119	PBGA	I
	71T75602S100BGI	BG119	PBGA	I
	71T75602S100BGI8	BG119	PBGA	I

5313 tbl 27

Speed (ns)	Orderable Part ID	Pkg. Code	Pkg. Type	Temp. Grade
100	71T75802S100BG	BG119	PBGA	C
	71T75802S100BG8	BG119	PBGA	C
	71T75802S100BGGI	BGG119	PBGA	I
	71T75802S100BGGI8	BGG119	PBGA	I
	71T75802S100BGI	BG119	PBGA	I
	71T75802S100BGI8	BG119	PBGA	I

5313 tbl 28

Orderable Part Information (con't)

Speed (ns)	Orderable Part ID	Pkg. Code	Pkg. Type	Temp. Grade
133	71T75602S133BG	BG119	PBGA	C
	71T75602S133BG8	BG119	PBGA	C
	71T75602S133BGG	BGG119	PBGA	C
	71T75602S133BGG8	BGG119	PBGA	C
	71T75602S133BGGI	BGG119	PBGA	I
	71T75602S133BGGI8	BGG119	PBGA	I
	71T75602S133BGI	BG119	PBGA	I
	71T75602S133BGI8	BG119	PBGA	I
	71T75602S133PFG	PKG100	TQFP	C
	71T75602S133PFG8	PKG100	TQFP	C
	71T75602S133PFGI	PKG100	TQFP	I
	71T75602S133PFGI8	PKG100	TQFP	I
150	71T75602S150BG	BG119	PBGA	C
	71T75602S150BG8	BG119	PBGA	C
	71T75602S150BGG	BGG119	PBGA	C
	71T75602S150BGG8	BGG119	PBGA	C
	71T75602S150BGGI	BGG119	PBGA	I
	71T75602S150BGGI8	BGG119	PBGA	I
	71T75602S150BGI	BG119	PBGA	I
	71T75602S150BGI8	BG119	PBGA	I
	71T75602S150PFG	PKG100	TQFP	C
	71T75602S150PFG8	PKG100	TQFP	C
	71T75602S150PFGI	PKG100	TQFP	I
	71T75602S150PFGI8	PKG100	TQFP	I
166	71T75602S166BG	BG119	PBGA	C
	71T75602S166BG8	BG119	PBGA	C
	71T75602S166BGG	BGG119	PBGA	C
	71T75602S166BGG8	BGG119	PBGA	C
	71T75602S166BGGI	BGG119	PBGA	I
	71T75602S166BGGI8	BGG119	PBGA	I
	71T75602S166BGI	BG119	PBGA	I
	71T75602S166BGI8	BG119	PBGA	I
	71T75602S166PFG	PKG100	TQFP	C
	71T75602S166PFG8	PKG100	TQFP	C
	71T75602S166PFGI	PKG100	TQFP	I
	71T75602S166PFGI8	PKG100	TQFP	I

5313 tbl 27a

Speed (ns)	Orderable Part ID	Pkg. Code	Pkg. Type	Temp. Grade
133	71T75802S133BG	BG119	PBGA	C
	71T75802S133BG8	BG119	PBGA	C
	71T75802S133BGG	BGG119	PBGA	C
	71T75802S133BGG8	BGG119	PBGA	C
	71T75802S133BGGI	BGG119	PBGA	I
	71T75802S133BGGI8	BGG119	PBGA	I
	71T75802S133BGI	BG119	PBGA	I
	71T75802S133BGI8	BG119	PBGA	I
	71T75802S133PFG	PKG100	TQFP	C
	71T75802S133PFG8	PKG100	TQFP	C
	71T75802S133PFGI	PKG100	TQFP	I
	71T75802S133PFGI8	PKG100	TQFP	I
150	71T75802S150BG	BG119	PBGA	C
	71T75802S150BG8	BG119	PBGA	C
	71T75802S150BGG	BGG119	PBGA	C
	71T75802S150BGG8	BGG119	PBGA	C
	71T75802S150BGGI	BGG119	PBGA	I
	71T75802S150BGGI8	BGG119	PBGA	I
	71T75802S150BGI	BG119	PBGA	I
	71T75802S150BGI8	BG119	PBGA	I
	71T75802S150PFG	PKG100	TQFP	C
	71T75802S150PFG8	PKG100	TQFP	C
166	71T75802S166BG	BG119	PBGA	C
	71T75802S166BG8	BG119	PBGA	C
	71T75802S166BGG	BGG119	PBGA	C
	71T75802S166BGG8	BGG119	PBGA	C
	71T75802S166BGGI	BGG119	PBGA	I
	71T75802S166BGGI8	BGG119	PBGA	I
	71T75802S166BGI	BG119	PBGA	I
	71T75802S166BGI8	BG119	PBGA	I
	71T75802S166PFG	PKG100	TQFP	C
	71T75802S166PFG8	PKG100	TQFP	C
	71T75802S166PFGI	PKG100	TQFP	I
	71T75802S166PFGI8	PKG100	TQFP	I
200	71T75802S200BG	BG119	PBGA	C
	71T75802S200BG8	BG119	PBGA	C
	71T75802S200BGG	BGG119	PBGA	C
	71T75802S200BGG8	BGG119	PBGA	C
	71T75802S200BGI	BG119	PBGA	I
	71T75802S200BGI8	BG119	PBGA	I
	71T75802S200PFG	PKG100	TQFP	C
	71T75802S200PFG8	PKG100	TQFP	C
	71T75802S200PFGI	PKG100	TQFP	I
	71T75802S200PFGI8	PKG100	TQFP	I

5313 tbl 28a

Datasheet Document History

Rev	Date	Pages	Description
0	04/20/00		Created New Datasheet
1	05/25/00	Pg.1,14,15,25	Added 166MHz speed grade offering
		Pg. 1,2,14	Corrected error in ZZ Sleep Mode
		Pg. 23	AddBQ165 Package Diagram Outline
		Pg. 24	Corrected 119BGA Package Diagram Outline.
		Pg. 25	Corrected topmark on ordering information
2	08/23/01	Pg. 1,2,24	Removed reference of BQ165 Package
		Pg. 7	Removed page of the 165 BGA pin configuration
		Pg. 23	Removed page of the 165 BGA package diagram outline
3	10/16/01	Pg. 6	Corrected 3.3V to 2.5V in Note 2
	10/29/01	Pg. 13	Improved DC Electrical characteristics-parameters improved: Icc, ISB2, ISB3, IZZ.
4	12/21/01	Pg. 4-6	Added clarification to JTAG pins, allow for NC. Added 36M address pin locations.
		Pg. 14	Revised 166MHz t_{CDC}(min), t_{CLZ}(min) and t_{CHZ}(min) to 1.0ns
5	06/07/02	Pg. 1-3,6,13,20,21	Added complete JTAG functionality.
		Pg. 2,13	Added notes for ZZ pin internal pulldown and ZZ leakage current.
		Pg. 13,14,24	Added 200MHz and 225MHz to DC and AC Electrical Characteristics. Updated supply current for Idd, ISB1, ISB3 and Izz.
6	11/19/02	Pg.1-24	Changed datasheet from Advanced Information to final release.
		Pg.13	Updated DC Electrical characteristics temperature and voltage range table.
7	05/23/03	Pg.4,5,13,14,24	Added I-temp to the datasheet.
		Pg.5	Updated 165 BGA Capacitance table.
8	04/01/04	Pg. 1	Updated logo with new design.
		Pg. 4,5	Clarified ambient and case operating temperatures.
		Pg. 6	Updated pin I/O number order for the 119 BGA.
		Pg. 23	Updated 119BGA Package Diagram Drawing.
9	10/01/08	Pg. 1,13,14,24	Deleted 225MHz part, added 200MHz Industrial grade and added green packages. Updated the ordering information by removing the "IDT" notation.
10	04/04/12	Pg. 2,22	Updated text on Page 2 last paragraph. Added Note to ordering information and updated to include tube or tray and tape & reel.
11	10/04/17	Pg. 1 & 26	Updated IDT logo from Trademark to Registered
		Pg. 1- 4	In Features: Added text: "Green parts available, see Ordering Information" Moved the 512Kx36 FBD from page 3 to page 1, moved the 1Mx18 FBD from page 3 to page 2, moved the Pin Description Summary from page 1 to page 3 and moved the Pin Definitions from page 2 to page 4 in accordance with our standard datasheet format
		Pg. 5 & 6	Updated the TQFP pin configurations for the 512kx36 and 1Mx18 by rotating package pin labels and pin numbers 90 degrees counter clockwise, added IDT logo & in accordance with the packaging code, changed the PK100 designation to PKG100 , changed the text to be in alignment with new diagram marking specs
		Pg. 6	Removed fBGA capacitance table as this package is no longer offered for this device
		Pg. 12	Removed "? = don't know" from Burst Write Operation footnote 1 as it does not apply to this table
		Pg. 15	Updated DC Chars table added footnote 4 & reference 4 for the 512K x 36, 119 BGA 200Mhz speed offered only for the 71T75802 device
		Pg. 16	Updated AC Chars table added footnote 6 & reference 6 for the 1M x 18, 119 BGA 200Mhz speed offered only for the 71T75802 device
		Pg. 24	Ordering Information updated to Tray and Green indicator Updated package codes TQFP to PKG100 and BGA to BGG119
		Pg. 24-25	Added Orderable Part Information from idt.com

CORPORATE HEADQUARTERS
6024 Silver Creek Valley Rd
San Jose, CA 95138

for SALES:
800-345-7015 or 408-284-8200
fax: 408-284-2775
www.idt.com

for Tech Support:
sramhelp@idt.com
408-284-4532

The IDT logo is a registered trademark of Integrated Device Technology, Inc. All brands or products are the trademarks or registered trademarks of their respective owners.
ZBT® and Zero Bus Turnaround are trademarks of Integrated Device Technology, Inc. and the architecture is supported by Micron Technology and Motorola Inc.

Mouser Electronics

Authorized Distributor

Click to View Pricing, Inventory, Delivery & Lifecycle Information:

IDT (Integrated Device Technology):

71T75802S200BGG8 71T75802S166BGGI8 71T75802S166BG8 71T75802S100BGGI 71T75802S133PFG8 71T75802S166BGGI 71T75602S150BG 71T75802S150BG 71T75602S150PFG8 71T75802S133PFGI8 71T75602S166PFG8 71T75802S200PFG8 71T75802S150BGGI 71T75802S133BGGI 71T75602S133BGGI8 71T75802S150BG8 71T75602S150PFG 71T75602S150BGI 71T75602S133BGGI 71T75602S150BGG 71T75602S150BG8 71T75802S166BG 71T75602S166BG 71T75602S100BGG8 71T75602S100BGI8 71T75602S150BGG8 71T75602S150BGI8 71T75802S133PFG 71T75802S133BGG 71T75802S133BGI 71T75802S133PFGI 71T75802S200PFGI8 71T75802S133BGI8 71T75802S133BGG8 71T75602S133BGI 71T75602S133BGG 71T75602S133PFG 71T75802S200PFGI 71T75802S166BGI 71T75802S166BGG 71T75602S166BGG8 71T75602S166BGI8 71T75602S100BGGI8 71T75602S150BGGI8 71T75602S133BG 71T75802S166PFGI 71T75802S133BG 71T75602S166PFG 71T75602S166BGG 71T75602S166BGI 71T75802S200BGG 71T75802S200BGI 71T75802S200PFG 71T75602S166BG8 71T75802S200BGI8 71T75802S166PFG 71T75802S100BGI8 71T75802S100BG 71T75602S100BG 71T75802S166BGI8 71T75802S166BGG8 71T75602S100BGGI 71T75602S166PFGI8 71T75802S150PFG8 71T75802S166PFGI8 71T75602S133BGG8 71T75602S133BGI8 71T75602S166BGGI 71T75602S133PFG8 71T75802S150BGGI8 71T75802S100BGGI8 71T75602S133PFGI 71T75602S150PFGI8 71T75802S100BGI 71T75802S200BG 71T75602S100BGI 71T75602S100BGG 71T75602S150PFGI 71T75602S166PFGI 71T75602S166BGGI8 71T75802S166PFG8 71T75802S200BG8 71T75802S133BGGI8 71T75602S150BGGI 71T75802S150PFG 71T75802S100BG8 71T75802S133BG8 71T75602S100BG8 71T75602S133PFGI8 71T75802S150BGG 71T75802S150BGI 71T75602S133BG8 71T75802S150BGI8 71T75802S150BGG8 71T75802S200BGGI8

ООО «ЛайфЭлектроникс» “LifeElectronics” LLC

ИНН 7805602321 КПП 780501001 Р/С 40702810122510004610 ФАКБ "АБСОЛЮТ БАНК" (ЗАО) в г.Санкт-Петербурге К/С 30101810900000000703 БИК 044030703

Компания «Life Electronics» занимается поставками электронных компонентов импортного и отечественного производства от производителей и со складов крупных дистрибьюторов Европы, Америки и Азии.

С конца 2013 года компания активно расширяет линейку поставок компонентов по направлению коаксиальный кабель, кварцевые генераторы и конденсаторы (керамические, пленочные, электролитические), за счёт заключения дистрибьюторских договоров

Мы предлагаем:

- *Конкурентоспособные цены и скидки постоянным клиентам.*
- *Специальные условия для постоянных клиентов.*
- *Подбор аналогов.*
- *Поставку компонентов в любых объемах, удовлетворяющих вашим потребностям.*

- *Приемлемые сроки поставки, возможна ускоренная поставка.*
- *Доставку товара в любую точку России и стран СНГ.*
- *Комплексную поставку.*
- *Работу по проектам и поставку образцов.*
- *Формирование склада под заказчика.*

- *Сертификаты соответствия на поставляемую продукцию (по желанию клиента).*
- *Тестирование поставляемой продукции.*
- *Поставку компонентов, требующих военную и космическую приемку.*
- *Входной контроль качества.*
- *Наличие сертификата ISO.*

В составе нашей компании организован Конструкторский отдел, призванный помогать разработчикам, и инженерам.

Конструкторский отдел помогает осуществить:

- *Регистрацию проекта у производителя компонентов.*
- *Техническую поддержку проекта.*
- *Защиту от снятия компонента с производства.*
- *Оценку стоимости проекта по компонентам.*
- *Изготовление тестовой платы монтаж и пусконаладочные работы.*

Тел: +7 (812) 336 43 04 (многоканальный)
Email: org@lifeelectronics.ru

www.lifeelectronics.ru