NTC thermistors for inrush current limiting

Leaded and coated disks

Series/Type: **B57238S0***M0****

Date: October 2011

© EPCOS AG 2011. Reproduction, publication and dissemination of this publication, enclosures hereto and the information contained therein without EPCOS' prior express consent is prohibited.

Applications

- Switch-mode power supplies
- Soft-start motors, e.g. in vacuum cleaners

Features

- Useable in series connections up to 265 V_{RMS}
- Coated thermistor disk for line applications
- Kinked leads of tinned copper wire
- Wide resistance range
- UL approval (E69802)

Options

Resistance tolerance <20% and alternative lead configurations available on request

Delivery mode

Bulk (standard) or with cardboard tape on 500-mm reel

Dimensional drawing

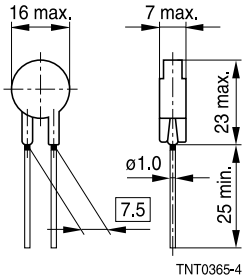

Dimensions in mm
Approx. weight 3 g

General technical data

Climatic category	(IEC 60068-1)		55/170/21	
Max. power	(at 25 °C)	P_{max}	3.9	W
Resistance tolerance		$\Delta R_R/R_R$	±20	%
Rated temperature		T_R	25	°C
Dissipation factor	(in air)	δ_{th}	approx. 20	mW/K
Thermal cooling time constant	(in air)	τ_c	approx. 80	s
Heat capacity		C_{th}	approx. 1600	mJ/K

Electrical specification and ordering codes

R_{25} Ω	I_{max} (0...65 °C) A	$B_{25/100}$ K	C_{test} 1) 230 V AC µF	C_{test} 1) 110 V AC µF	Param. for R(I) 1) k	Param. for R(I) 1) n	Ordering code
2.5	8.4	2800	700	2800	0.984	−1.36	B57238S0259M0**
3	7.4	2900	700	2800	1.04	−1.36	B57238S0309M0**
4.7	6.6	2965	700	2800	1.20	−1.37	B57238S0479M0**
5	6.4	2965	700	2800	1.23	−1.37	B57238S0509M0**
7	6.0	2965	700	2800	1.34	−1.38	B57238S0709M0**
8	5.5	3065	700	2800	1.40	−1.39	B57238S0809M0**
10	5.0	3065	700	2800	1.50	−1.39	B57238S0100M0**
15	4.4	3165	700	2800	1.67	−1.40	B57238S0150M0**
16	4.0	3165	700	2800	1.69	−1.39	B57238S0160M0**

** = Delivery mode
00 = Bulk
51 = Reel packing

1) For details on the capacitance C_{test} as well as on the parameters k and n refer to "Application notes", chapters 1.6 and 1.7.

Reliability data

Test	Standard	Test conditions	$\Delta R_{25}/R_{25}$ (typical)	Remarks
Storage in dry heat	IEC 60068-2-2	Storage at upper category temperature T: 170 °C t: 1000 h	< 10%	No visible damage
Storage in damp heat, steady state	IEC 60068-2-78	Temperature of air: 40 °C Relative humidity of air: 93% Duration: 21 days	< 5%	No visible damage
Rapid temperature cycling	IEC 60068-2-14	Lower test temperature: −55 °C Upper test temperature: 170 °C Number of cycles: 10	< 10%	No visible damage
Endurance		$I = I_{max}$ t: 1000 h	< 10%	No visible damage
Cyclic endurance		$I = I_{max}$, 1000 cycles On-time = 1 min Cooling time = 6 min	< 10%	No visible damage
Transient load		Capacitance = C_{test} Number of cycles: 1000	< 5%	No visible damage

Note

- The self-heating of a thermistor during operation depends on the load applied and the applicable dissipation factor.
- When loaded with maximum allowable current/power and the specified dissipation factor is taken as a basis, the NTC thermistor may reach a mean temperature of up to 250 °C.
- The heat developed during operation will also be dissipated through the lead wires. So the contact areas, too, may become quite hot at maximum load.
- When mounting NTC thermistors you have to ensure that there is an adequate distance between the thermistor and all parts which are sensitive to heat or combustible.

Taping and packing

1 Taping of radial leaded ICL NTC thermistors according to the specified lead spacing

Dimensions and tolerances

Lead spacing F = 5.0 mm (taping to IEC 60286-2)

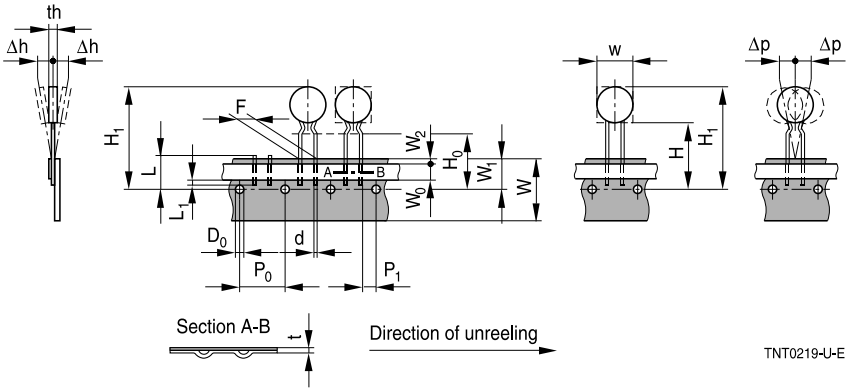

Lead spacing F = 7.5 mm (taping based on IEC 60286-2)

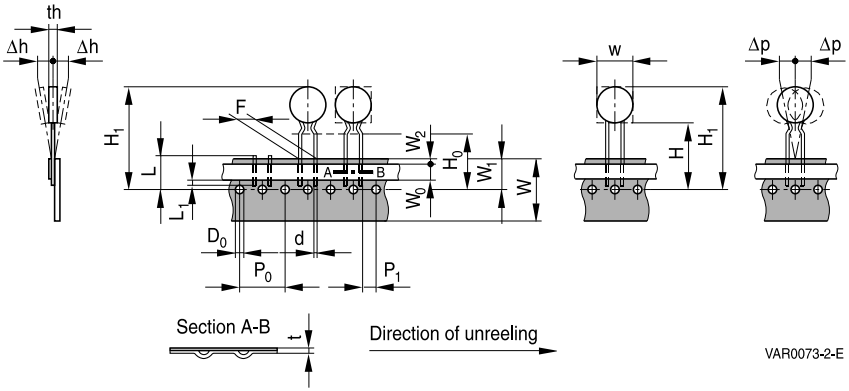

Dimensions (mm)

	Lead spacing 5 mm	Tolerance of lead spacing 5 mm	Lead spacing 7.5 mm	Tolerance of lead spacing 7.5 mm	Remarks
w	≤12.0	max.	≥12.0	max.	please refer to dimensional drawings
th	6.0	max.	7	max.	please refer to dimensional drawings
d	0.5/0.6	±0.05	0.8/1.0	±0.05	please refer to dimensional drawings
P_0	12.7	±0.3	12.7	±0.3	±1 mm / 20 sprocket holes
P_1	3.85	±0.7	8.95	±0.8	
F	5.0	+0.6/−0.1	7.5	±0.8	
Δh	0	±2.0	0	Depends on th	measured at top of component body
Δp	0	±1.3	0	±2.0	
W	18.0	±0.5	18.0	±0.5	
W_0	5.5	min.	11.0	min.	peel-off force ≥5 N
W_1	9.0	+0.75/−0.5	9.0	+0.75/−0.5	
W_2	3.0	max.	3.0	max.	
H	18.0	+2.0/−0	18.0	+2.0/−0	
H_0	16.0	±0.5	16.0	±0.5	
H_1	32.2	max.	45.0	max.	
D_0	4.0	±0.2	4.0	±0.2	
t	0.9	max.	0.9	max.	without wires
L	11.0	max.	11.0	max.	
L_1	4.0	max.	4.0	max.	

Types of packing

Reel packing

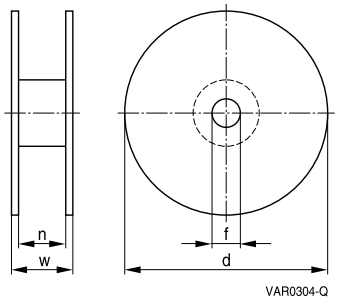

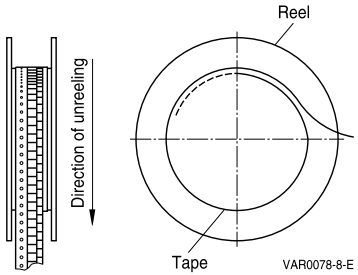

Reel dimensions (in mm)

Reel type	d	f	n	w
I	360 max.	31 ±1	approx. 45	54 max.
II	500 max.	23 ±1	approx. 59	72 max.

Bulk packing

The components are packed in cardboard boxes, the size of which depends on the order quantity.

Mounting instructions

1 Soldering

1.1 Leaded NTC thermistors

Leaded thermistors comply with the solderability requirements specified by CECC.

When soldering, care must be taken that the NTC thermistors are not damaged by excessive heat. The following maximum temperatures, maximum time spans and minimum distances have to be observed:

	Dip soldering	*Iron soldering*
Bath temperature	max. 260 °C	max. 360 °C
Soldering time	max. 4 s	max. 2 s
Distance from thermistor	min. 6 mm	min. 6 mm

Under more severe soldering conditions the resistance may change.

Solderability (test to IEC 60068-2-20)
Preconditioning: Immersion into flux F-SW 32.
Evaluation criterion: Wetting of soldering areas ≥95%.

Solder	Bath temperature (°C)	Dwell time (s)
SnAg (3.0 ... 4.0), Cu (0.5 ... 0.9)	245 ±3	3

1.1.1 Resistance to soldering heat (test to IEC 60068-2-20)

Preconditioning: Immersion into flux F-SW 32.

Solder	Bath temperature (°C)	Dwell time (s)
SnAg (3.0 ... 4.0), Cu (0.5 ... 0.9)	260 −5	10

Wave soldering

Temperature characteristic at component terminal with dual wave soldering

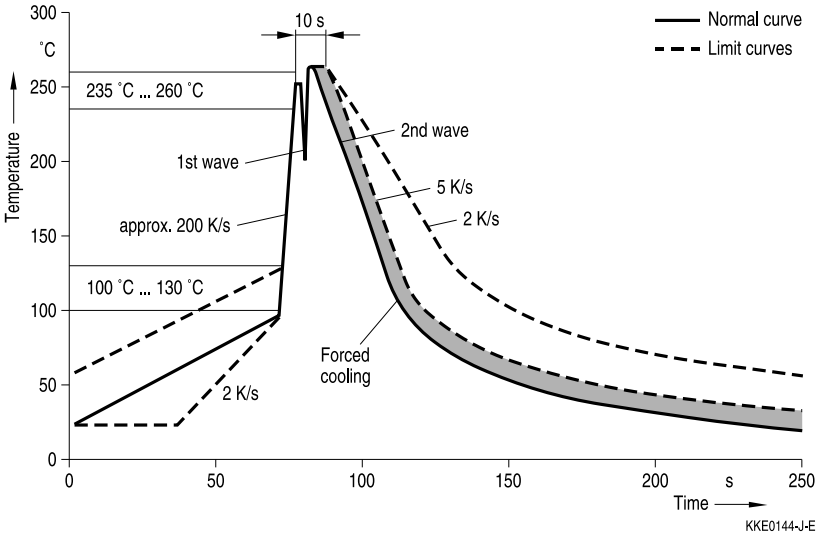

2 Robustness of terminations

The leads meet the requirements of IEC 60068-2-21. They may not be bent closer than 4 mm from the solder joint on the thermistor body or from the point at which they leave the feed-throughs. During bending, any mechanical stress at the outlet of the leads must be removed. The bending radius should be at least 0.75 mm.

Tensile strength: Test Ua1:

Leads	0.50 < ∅ ≤0.80 mm =	10.0 N
	0.80 < ∅ ≤1.25 mm =	20.0 N

Bending strength: Test Ub:

Two 90°-bends in opposite directions at a weight of 0.25 kg.

Torsional strength: Test Uc: severity 2

The lead is bent by 90° at a distance of 6 to 6.5 mm from the thermistor body.

The bending radius of the leads should be approx. 0.75 mm. Two torsions of 180° each (severity 2).

When subjecting leads to mechanical stress, the following should be observed:

Tensile stress on leads

During mounting and operation tensile forces on the leads are to be avoided.

Bending of leads

Bending of the leads directly on the thermistor body is not permissible.

A lead may be bent at a minimum distance of twice the wire's diameter +2 mm from the solder joint on the thermistor body. During bending the wire must be mechanically relieved at its outlet. The bending radius should be at least 0.75 mm.

Twisting of leads

The twisting (torsion) by 180° of a lead bent by 90° is permissible at 6 mm from the bottom of the thermistor body.

3 Sealing and potting

When thermistors are sealed, potted or overmolded, there must be no mechanical stress caused by thermal expansion during the production process (curing / overmolding process) and during later operation. The upper category temperature of the thermistor must not be exceeded. Ensure that the materials used (sealing / potting compound and plastic material) are chemically neutral.

4 Cleaning

If cleaning is necessary, mild cleaning agents such as ethyl alcohol and cleaning gasoline are recommended. Cleaning agents based on water are not allowed. Ultrasonic cleaning methods are permissible.

5 Storage

In order to maintain their solderability, thermistors must be stored in a non-corrosive atmosphere. Humidity, temperature and container materials are critical factors.

The components should be left in the original packing. Touching the metallization of unsoldered thermistors may change their soldering properties.

Storage temperature: −25 °C up to 45 °C

Max. relative humidity (without condensation):

<95%, maximum 30 days per annum

Solder the thermistors listed in this data book after shipment from EPCOS within the time specified:

Leaded components: 24 months

Cautions and warnings

General

See "Important notes" at the end of this document.

Storage

- Store thermistors only in original packaging. Do not open the package before storage.
- Storage conditions in original packaging: storage temperature −25 °C ... +45 °C, relative humidity ≤75% annual mean, maximum 95%, dew precipitation is inadmissible.
- Avoid contamination of thermistors surface during storage, handling and processing.
- Avoid storage of thermistor in harmful environments like corrosive gases (SO_x, Cl etc).
- Solder thermistors after shipment from EPCOS within the time specified:
  − Leaded components: 24 months

Handling

- NTC thermistors must not be dropped. Chip-offs must not be caused during handling of NTCs.
- Components must not be touched with bare hands. Gloves are recommended.
- Avoid contamination of thermistor surface during handling.
- In case of exposure of the NTC thermistors to water, electrolytes or other aggressive media, these media can penetrate the coating and reach the surface of the ceramic. Low-ohmic or high-ohmic behavior may occur due to the formation of an electrolyte with metals (silver/lead/tin from metallization or solder). Low-ohmic behavior is caused by electrochemical migration, high-ohmic behavior by dissolving of the electrode. Ineither case, the functionality of the NTC thermistors can not be assured.

Bending / twisting leads

- A lead (wire) may be bent at a minimum distance of twice the wire's diameter plus 4 mm from the component head or housing. When bending ensure the wire is mechanically relieved at the component head or housing. The bending radius should be at least 0.75 mm.
- Twisting (torsion) by 180° of a lead bent by 90° is permissible at 6 mm from the bottom of the thermistor body.

Soldering

- Use resin-type flux or non-activated flux.
- Insufficient preheating may cause ceramic cracks.
- Rapid cooling by dipping in solvent is not recommended.
- Complete removal of flux is recommended.

Mounting

- When NTC thermistors are encapsulated with sealing material or overmolded with plastic material, the precautions given in chapter “Mounting instructions”, “Sealing and potting” must be observed.
- Electrode must not be scratched before/during/after the mounting process.
- Contacts and housings used for assembly with thermistor have to be clean before mounting.
- During operation, the inrush current limiters surface temperature can be very high. Ensure that adjacent components are placed at a sufficient distance from the thermistor to allow for proper cooling of the thermistors.
- Ensure that adjacent materials are designed for operation at temperatures comparable to the surface temperature of the thermistor. Be sure that surrounding parts and materials can withstand this temperature.
- Make sure that inrush current limiters are adequately ventilated to avoid overheating.
- Avoid contamination of thermistor surface during processing.

Operation

- Use thermistors only within the specified operating temperature range.
- Use inrush current limiters only within the specified voltage and current ranges.
- Environmental conditions must not harm the thermistors. Use thermistors only in normal atmospheric conditions.
- Contact of NTC thermistors with any liquids and solvents should be prevented. It must be ensured that no water enters the NTC thermistor (e.g. through plug terminals). For measurement purposes (checking the specified resistance vs. temperature), the component must not be immersed in water but in suitable liquids (e.g. Galden).
- In case of exposure of the NTC thermistors to water, electrolytes or other aggressive media, these media can penetrate the coating and reach the surface of the ceramic. Low-ohmic or high-ohmic behavior may occur due to the formation of an electrolyte with metals (silver/lead/tin from metallization or solder). Low-ohmic behavior is caused by electrochemical migration, high-ohmic behavior by dissolving of the electrode. Ineither case, the functionality of the NTC thermistorscannot be assured.
- Be sure to provide an appropriate fail-safe function to prevent secondary product damage caused by malfunction (e.g. use a metal oxide varistor for limitation of overvoltage condition).

Symbols and terms

Symbol	English	German
C_{test}	Test capacitance	Prüfkapazität (elektrisch)
C_{th}	Heat capacitance	Wärmekapazität
I	Current	Strom
I_{max}	Maximum current within stated temperature range	Maximalstrom im angegebenen Temperaturbereich
I_{NTC}	NTC current	Heißleiter-Strom
I_R	Rated current	Nennstrom
P_{25}	Maximum power at 25 °C	Maximale Leistung bei 25 °C
P_{diss}	Power dissipation	Verlustleistung
P_{el}	Electrical power	Elektrische Leistung
P_{max}	Maximum power within stated temperature range	Maximale Leistung im angegebenenTemperaturbereich
R_R	Rated resistance	Nennwiderstand
$\Delta R_R/R_R$	Resistance tolerance	Widerstandstoleranz
R_T	Resistance at temperature T (e.g. R_{25} = resistance at 25 °C)	Widerstand bei Temperatur T (z.B. R_{25} = Widerstand bei 25 °C)
T	Temperature	Temperatur
t	Time	Zeit
T_A	Ambient temperature	Umgebungstemperatur
t_a	Thermal threshold time	Thermische Ansprechzeit
T_{max}	Upper category temperature	Obere Grenztemperatur (Kategorietemperatur)
T_{min}	Lower category temperature	Untere Grenztemperatur (Kategorietemperatur)
T_R	Rated temperature	Nenntemperatur
V	Voltage	Spannung
V_{load}	Load voltage	Ladespannung
V_{NTC}	Voltage drop across an NTC thermistor	Spannungsabfall am Heißleiter
α	Temperature coefficient	Temperaturkoeffizient
Δ	Tolerance, change	Toleranz, Änderung
δ_{th}	Dissipation factor	Wärmeleitwert
τ_c	Thermal cooling time constant	Thermische Abkühlzeitkonstante

Abbreviations / Notes

Symbol	English	German
*	To be replaced by a number in ordering codes, type designations etc.	Platzhalter für Zahl im Bestellnummern-code oder für die Typenbezeichnung.
+	To be replaced by a letter.	Platzhalter für einen Buchstaben.
	All dimensions are given in mm.	Alle Maße sind in mm angegeben.
	The commas used in numerical values denote decimal points.	Verwendete Kommas in Zahlenwerten bezeichnen Dezimalpunkte.

Important notes

The following applies to all products named in this publication:

1. Some parts of this publication contain **statements about the suitability of our products for certain areas of application**. These statements are based on our knowledge of typical requirements that are often placed on our products in the areas of application concerned. We nevertheless expressly point out **that such statements cannot be regarded as binding statements about the suitability of our products for a particular customer application**. As a rule, EPCOS is either unfamiliar with individual customer applications or less familiar with them than the customers themselves. For these reasons, it is always ultimately incumbent on the customer to check and decide whether an EPCOS product with the properties described in the product specification is suitable for use in a particular customer application.
2. We also point out that **in individual cases, a malfunction of electronic components or failure before the end of their usual service life cannot be completely ruled out in the current state of the art, even if they are operated as specified**. In customer applications requiring a very high level of operational safety and especially in customer applications in which the malfunction or failure of an electronic component could endanger human life or health (e.g. in accident prevention or lifesaving systems), it must therefore be ensured by means of suitable design of the customer application or other action taken by the customer (e.g. installation of protective circuitry or redundancy) that no injury or damage is sustained by third parties in the event of malfunction or failure of an electronic component.
3. **The warnings, cautions and product-specific notes must be observed.**
4. In order to satisfy certain technical requirements, **some of the products described in this publication may contain substances subject to restrictions in certain jurisdictions (e.g. because they are classed as hazardous)**. Useful information on this will be found in our Material Data Sheets on the Internet (www.epcos.com/material). Should you have any more detailed questions, please contact our sales offices.
5. We constantly strive to improve our products. Consequently, **the products described in this publication may change from time to time**. The same is true of the corresponding product specifications. Please check therefore to what extent product descriptions and specifications contained in this publication are still applicable before or when you place an order. We also **reserve the right to discontinue production and delivery of products**. Consequently, we cannot guarantee that all products named in this publication will always be available. The aforementioned does not apply in the case of individual agreements deviating from the foregoing for customer-specific products.
6. Unless otherwise agreed in individual contracts, **all orders are subject to the current version of the "General Terms of Delivery for Products and Services in the Electrical Industry" published by the German Electrical and Electronics Industry Association (ZVEI)**.
7. The trade names EPCOS, BAOKE, Alu-X, CeraDiode, CSMP, CSSP, CTVS, DeltaCap, DigiSiMic, DSSP, FormFit, MiniBlue, MiniCell, MKK, MKD, MLSC, MotorCap, PCC, PhaseCap, PhaseCube, PhaseMod, PhiCap, SIFERRIT, SIFI, SIKOREL, SilverCap, SIMDAD, SiMic, SIMID, SineFormer, SIOV, SIP5D, SIP5K, ThermoFuse, WindCap are **trademarks registered or pending** in Europe and in other countries. Further information will be found on the Internet at www.epcos.com/trademarks.

ООО «ЛайфЭлектроникс» “LifeElectronics” LLC

ИНН 7805602321 КПП 780501001 Р/С 40702810122510004610 ФАКБ "АБСОЛЮТ БАНК" (ЗАО) в г.Санкт-Петербурге К/С 30101810900000000703 БИК 044030703

Компания «Life Electronics» занимается поставками электронных компонентов импортного и отечественного производства от производителей и со складов крупных дистрибьюторов Европы, Америки и Азии.

С конца 2013 года компания активно расширяет линейку поставок компонентов по направлению коаксиальный кабель, кварцевые генераторы и конденсаторы (керамические, пленочные, электролитические), за счёт заключения дистрибьюторских договоров

Мы предлагаем:

- *Конкурентоспособные цены и скидки постоянным клиентам.*
- *Специальные условия для постоянных клиентов.*
- *Подбор аналогов.*
- *Поставку компонентов в любых объемах, удовлетворяющих вашим потребностям.*

- *Приемлемые сроки поставки, возможна ускоренная поставка.*
- *Доставку товара в любую точку России и стран СНГ.*
- *Комплексную поставку.*
- *Работу по проектам и поставку образцов.*
- *Формирование склада под заказчика.*

- *Сертификаты соответствия на поставляемую продукцию (по желанию клиента).*
- *Тестирование поставляемой продукции.*
- *Поставку компонентов, требующих военную и космическую приемку.*
- *Входной контроль качества.*
- *Наличие сертификата ISO.*

В составе нашей компании организован Конструкторский отдел, призванный помогать разработчикам, и инженерам.

Конструкторский отдел помогает осуществить:

- *Регистрацию проекта у производителя компонентов.*
- *Техническую поддержку проекта.*
- *Защиту от снятия компонента с производства.*
- *Оценку стоимости проекта по компонентам.*
- *Изготовление тестовой платы монтаж и пусконаладочные работы.*

Тел: +7 (812) 336 43 04 (многоканальный)
Email: org@lifeelectronics.ru

www.lifeelectronics.ru