THIS DRAWING IS UNPUBLISHED. RELEASED FOR PUBLICATION 20
© COPYRIGHT 20 BY TYCO ELECTRONICS CORPORATION. ALL RIGHTS RESERVED.

LOC	DIST
GP	00

REVISIONS

P	LTR	DESCRIPTION	DATE	DWN	APVD
	A	RELEASED	24FEB2009	RG	PD

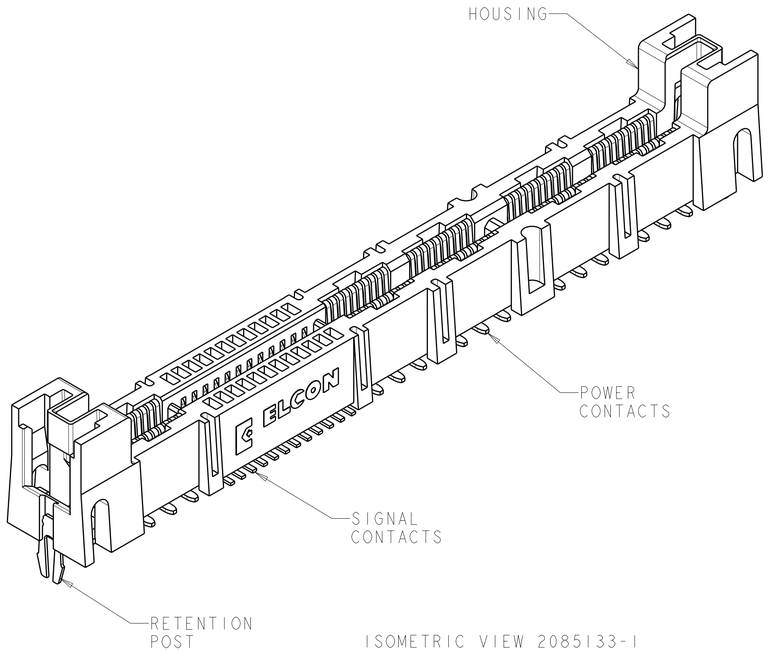

ISOMETRIC VIEW 2085133-1
SCALE 4:1

1. PART NUMBER CHANGES AND OR DESIGN CHANGES AFFECTING ITEM INTERCHANGEABILITY REQUIRE PRIOR TYCO ELECTRONICS APPROVAL AND AUTHORIZATION BY REVISION TO THIS DRAWING.

2. MATERIAL:
   HOUSING: GLASS FILLED POLYESTER, COLOR-BLACK
   UL94V-0 FLAMMABILITY RATED
   CONTACTS: COPPER ALLOY
   RETENTION POST: COPPER ALLOY

   FINISH:
3. SIGNAL CONTACTS:
   MATING AREA-0.76µm MIN GOLD OVER 3.81µm MIN NICKEL
   0.64µm MIN NICKEL PLATE OVER REMAINDER
   SMT TAILS-3.81µm MIN MATTE TIN OVER NICKEL PLATE
   POWER CONTACTS:
   1.27µm MIN NICKEL PLATE ALL OVER
   MATING AREA-0.76µm MIN GOLD OVER NICKEL PLATE
   SMT TAILS-3.05µm MIN TIN OVER NICKEL PLATE
   RETENTION POSTS:
   3.05µm MIN MATTE TIN OVER 0.63µm MIN NICKEL

4. ITEMS PROVIDED TO THIS SPECIFICATION TO BE PERMANENTLY IDENTIFIED WITH PART NUMBER AND DATE CODE.

5. MAXIMUM BURR OF 0.013 ON CARD TAB AREA.

6. SET TRACE BACK FROM PC BOARD EDGE. NO SOLDERMASK ALLOWED BETWEEN PC BOARD EDGE AND TRACE.

7. CONNECTOR ACCEPTS 1.57±0.13 THICK PC BOARD.

8. KEEP OUT AREA FOR COMPONENTS ONLY.

9. RECOMMENDED GOLD FINGER LENGTH FOR RELIABLE CONTACT.

10. DATUMS AND BASIC DIMENSIONS ESTABLISHED BY CUSTOMER.

11. FOR DESIGN OBJECTIVES SEE 108-2301.

12. THIS PRODUCT HAS NOT PASSED QUALIFICATION TESTING.

BOARD THICKNESS RANGE	DIM. "A"	PART NUMBER
2.92-3.55	4.61	2085133-3
2.29-2.92	4.19	2085133-2
≤1.57	3.68	2085133-1

THIS DRAWING IS A CONTROLLED DOCUMENT FOR TYCO ELECTRONICS CORPORATION. IT IS SUBJECT TO CHANGE AND THE CONTROLLING ENGINEERING ORGANIZATION SHOULD BE CONTACTED FOR THE LATEST REVISION.

DIMENSIONS: mm

TOLERANCES UNLESS OTHERWISE SPECIFIED:
0 PLC ±
1 PLC ±.5
2 PLC ±.25
3 PLC ±
4 PLC ±
ANGLES ±2

MATERIAL 2
FINISH 3

DWN R.GRZYBOWSKI 30JAN2009
CHK P D'AMATO 30JAN2009
APVD M PERCHERKE 30JAN2009

Tyco Electronics
Tyco Electronics
Harrisburg, PA 17105-3608

PRODUCT SPEC -
APPLICATION SPEC -
WEIGHT -

NAME SOCKET CONNECTOR, SMT
P2-S24-P8 MINI CROWN EDGE
-

SIZE	CAGE CODE	DRAWING NO	RESTRICTED TO
A1	00779	C-2085133	-

CUSTOMER DRAWING | SCALE 5:1 | SHEET 1 OF 4 | REV A

AMP 4805 REV 31MAR2000

Pro/ENGINEER DRAWING

THIS DRAWING IS UNPUBLISHED. RELEASED FOR PUBLICATION 20
© COPYRIGHT 20 BY TYCO ELECTRONICS CORPORATION. ALL RIGHTS RESERVED.

LOC	DIST
GP	00

REVISIONS

P	LTR	DESCRIPTION	DATE	DWN	APVD
	-	SEE SHEET 1	-	-	-

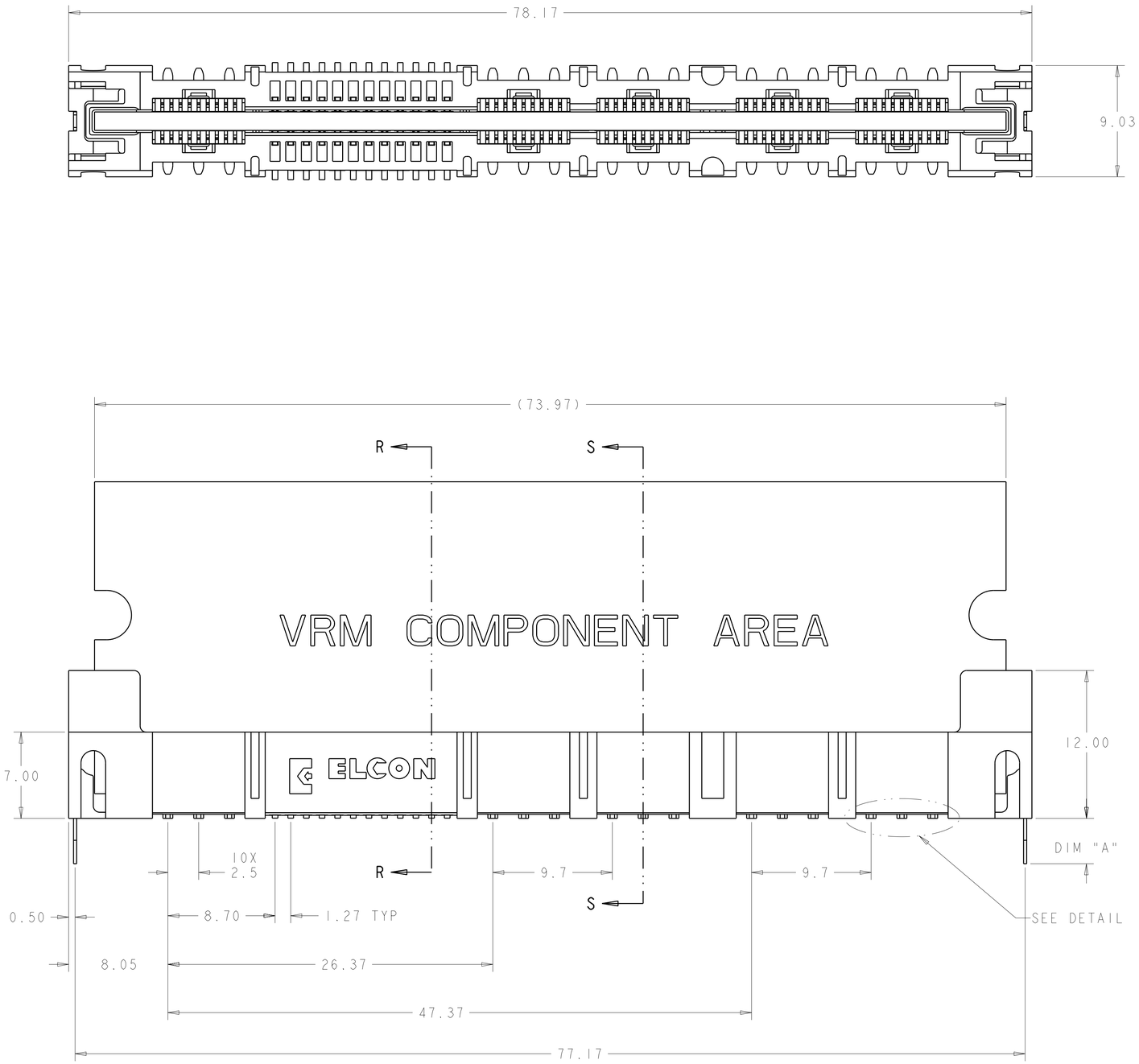

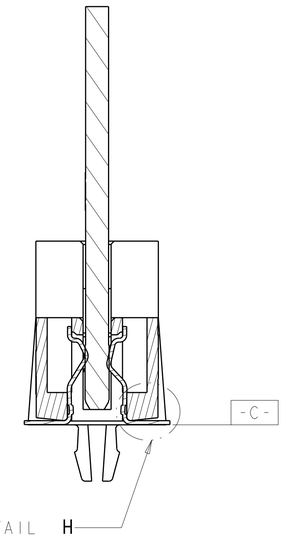

SECTION R-R

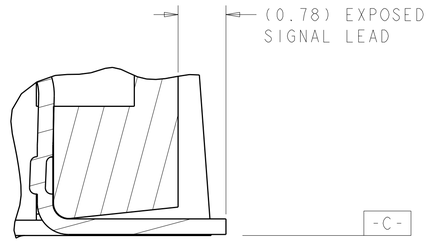

DETAIL H
SCALE 20:1

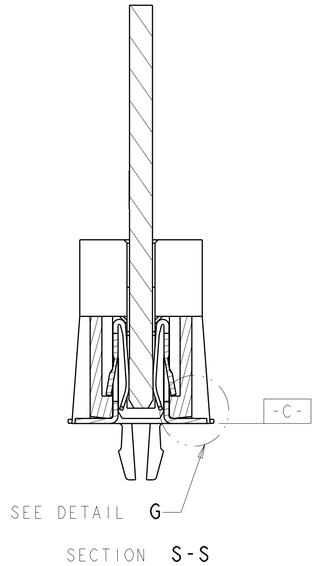

SECTION S-S

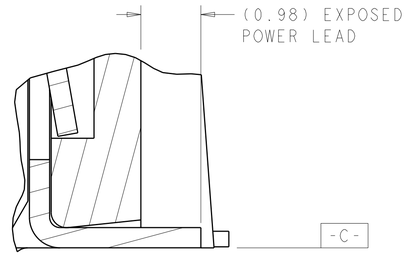

DETAIL G
SCALE 20:1

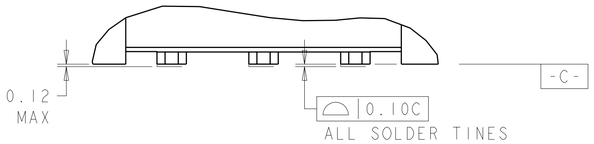

DETAIL Z
SCALE 12:1

THIS DRAWING IS A CONTROLLED DOCUMENT FOR TYCO ELECTRONICS CORPORATION. IT IS SUBJECT TO CHANGE AND THE CONTROLLING ENGINEERING ORGANIZATION SHOULD BE CONTACTED FOR THE LATEST REVISION.

DIMENSIONS: mm	TOLERANCES UNLESS OTHERWISE SPECIFIED: 0 PLC ±- 1 PLC ±.5 2 PLC ±.25 3 PLC ± 4 PLC ± ANGLES ±2	MATERIAL / FINISH

DWN	R.GRZYBOWSKI 30JAN2009
CHK	P.D'AMATO 30JAN2009
APVD	M.PERCHERKE 30JAN2009
PRODUCT SPEC	-
APPLICATION SPEC	-
WEIGHT	-

Tyco Electronics
Tyco Electronics
Harrisburg, PA 17105-3608

NAME: SOCKET CONNECTOR, SMT
P2-S24-P8 MINI CROWN EDGE
-

SIZE	CAGE CODE	DRAWING NO	RESTRICTED TO
A1	00779	C-2085133	-

CUSTOMER DRAWING | SCALE 5:1 | SHEET 2 OF 4 | REV A

THIS DRAWING IS UNPUBLISHED. RELEASED FOR PUBLICATION 20
© COPYRIGHT 20 BY TYCO ELECTRONICS CORPORATION. ALL RIGHTS RESERVED.

LOC	DIST
GP	00

REVISIONS

P	LTR	DESCRIPTION	DATE	DWN	APVD
	-	SEE SHEET 1	-	-	-

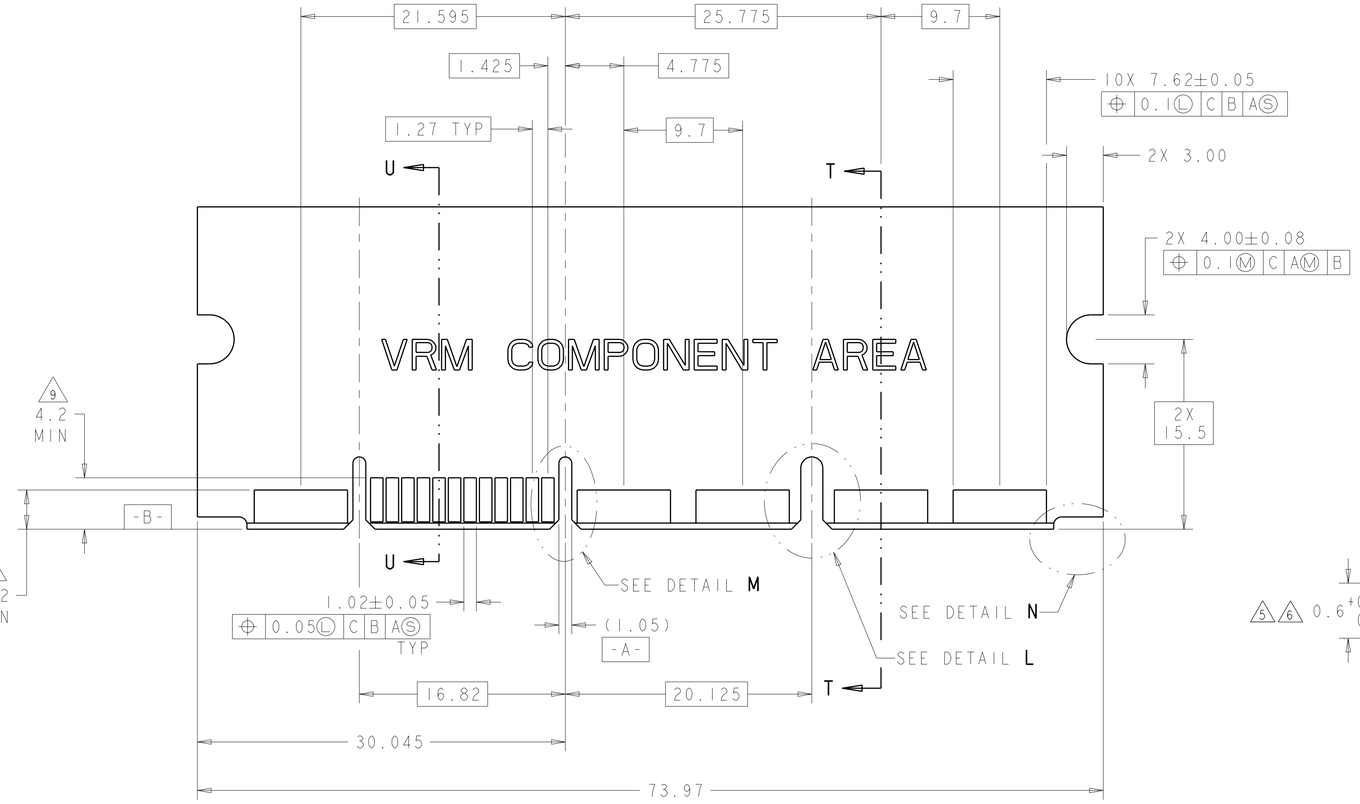

RECOMMENDED MATING BOARD
SCALE 4:1

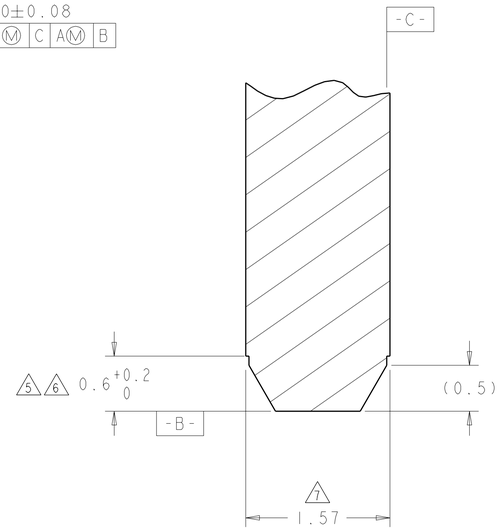

SECTION U-U
SCALE 30:1

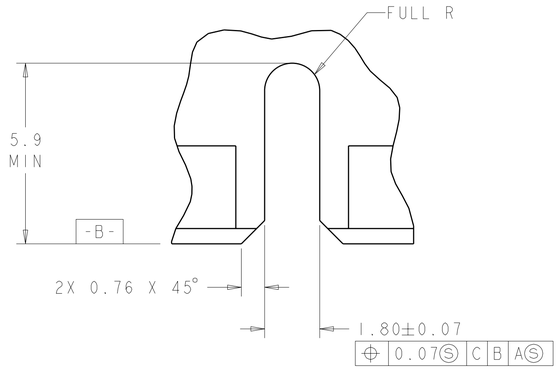

DETAIL L
SCALE 10:1

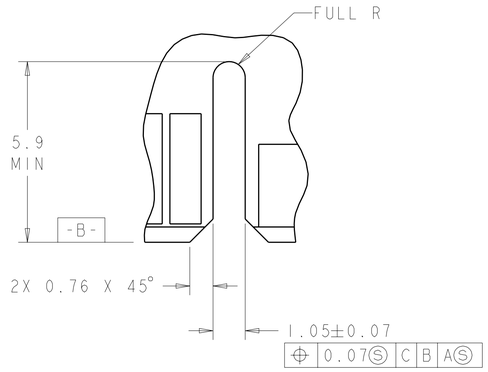

DETAIL M
2X TYPICAL
SCALE 10:1

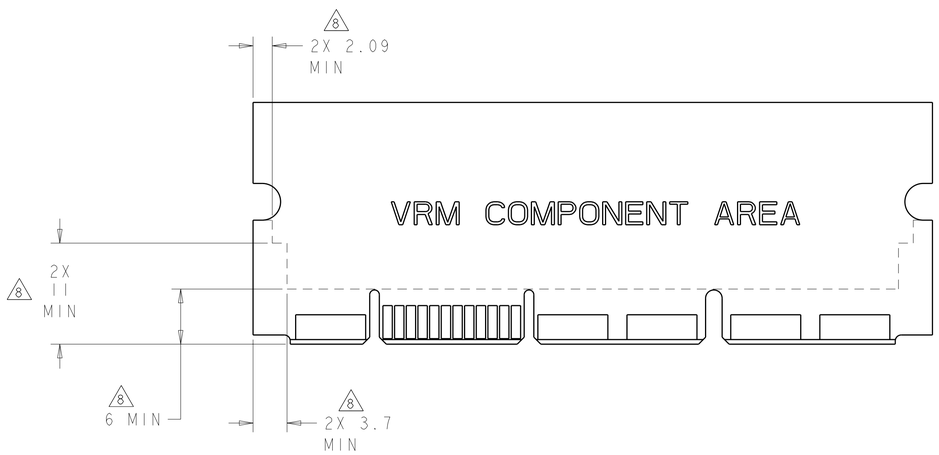

RECOMMENDED PC BOARD KEEP OUT AREA
SCALE 3:1

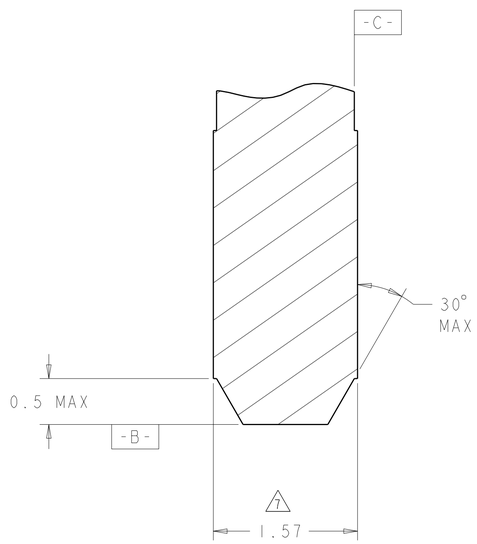

SECTION T-T
SCALE 30:1

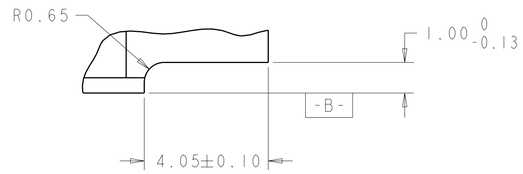

DETAIL N
2X TYPICAL
SCALE 10:1

THIS DRAWING IS A CONTROLLED DOCUMENT FOR TYCO ELECTRONICS CORPORATION. IT IS SUBJECT TO CHANGE AND THE CONTROLLING ENGINEERING ORGANIZATION SHOULD BE CONTACTED FOR THE LATEST REVISION.

DIMENSIONS: mm

TOLERANCES UNLESS OTHERWISE SPECIFIED:
0 PLC ±-
1 PLC ±.5
2 PLC ±.25
3 PLC ±
4 PLC ±
ANGLES ±2

MATERIAL
FINISH

DWN	R GRZYBOWSKI	30JAN2009
CHK	P D'AMATO	30JAN2009
APVD	M PERCHERKE	30JAN2009

PRODUCT SPEC -
APPLICATION SPEC -
WEIGHT -

Tyco Electronics
Tyco Electronics
Harrisburg, PA 17105-3608

NAME
SOCKET CONNECTOR, SMT
P2-S24-P8 MINI CROWN EDGE
-

SIZE	CAGE CODE	DRAWING NO	RESTRICTED TO
A1	00779	C-2085133	-

CUSTOMER DRAWING | SCALE 5:1 | SHEET 3 OF 4 | REV A

THIS DRAWING IS UNPUBLISHED. RELEASED FOR PUBLICATION 20
© COPYRIGHT 20 BY TYCO ELECTRONICS CORPORATION. ALL RIGHTS RESERVED.

LOC	DIST
GP	00

REVISIONS

P	LTR	DESCRIPTION	DATE	DWN	APVD
	-	SEE SHEET 1	-	-	-

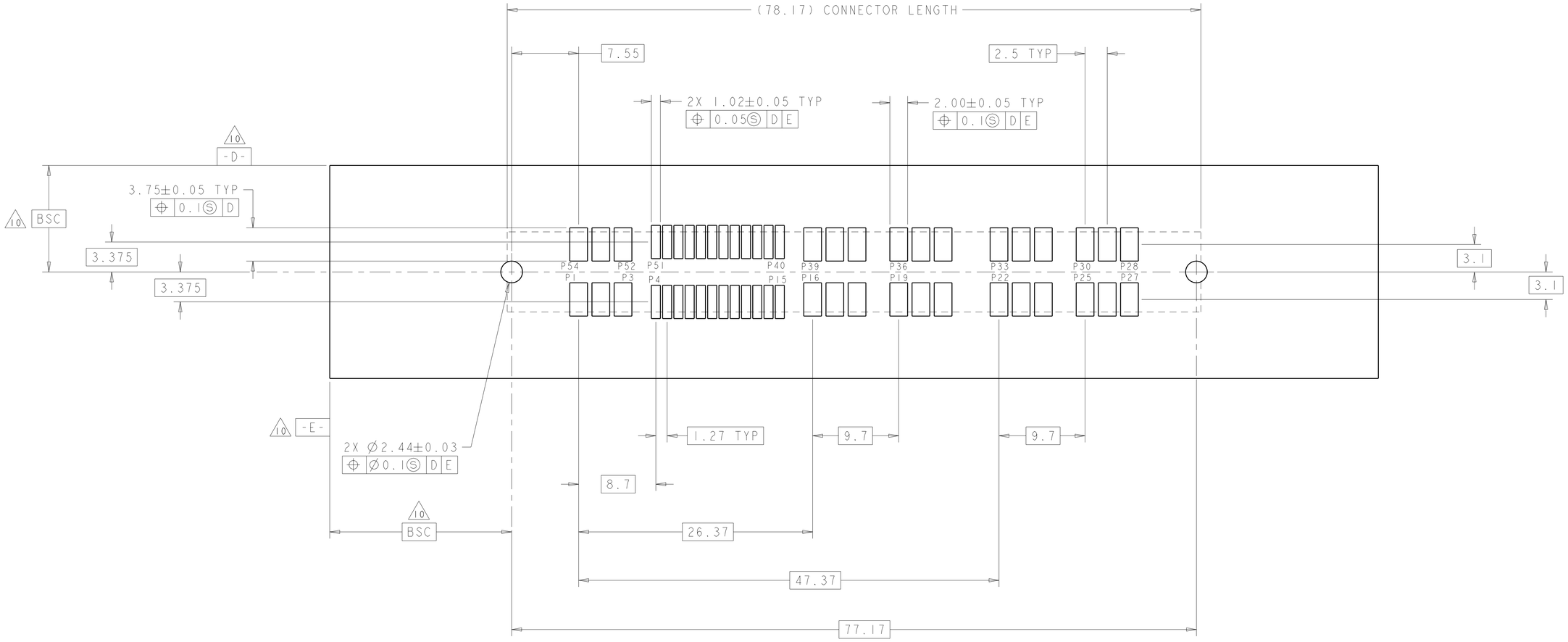

RECOMMENDED SOLDER LAND GUIDELINE
AS VIEWED FROM CONNECTOR SIDE
SCALE 4:1

THIS DRAWING IS A CONTROLLED DOCUMENT FOR TYCO ELECTRONICS CORPORATION. IT IS SUBJECT TO CHANGE AND THE CONTROLLING ENGINEERING ORGANIZATION SHOULD BE CONTACTED FOR THE LATEST REVISION.

DIMENSIONS: mm

TOLERANCES UNLESS OTHERWISE SPECIFIED:
0 PLC ±-
1 PLC ±.5
2 PLC ±.25
3 PLC ±
4 PLC ±
ANGLES ±2

MATERIAL

FINISH

DWN R.GRZYBOWSKI 30JAN2009
CHK P.D'AMATO 30JAN2009
APVD M.PERCHERKE 30JAN2009

PRODUCT SPEC -
APPLICATION SPEC -
WEIGHT -

Tyco Electronics
Tyco Electronics
Harrisburg, PA 17105-3608

NAME
SOCKET CONNECTOR, SMT
P2-S24-P8 MINI CROWN EDGE
-

SIZE	CAGE CODE	DRAWING NO	RESTRICTED TO
A1	00779	C-2085133	-

CUSTOMER DRAWING

SCALE	SHEET	OF	REV
5:1	4	4	A

ООО «ЛайфЭлектроникс» “LifeElectronics” LLC

ИНН 7805602321 КПП 780501001 Р/С 40702810122510004610 ФАКБ "АБСОЛЮТ БАНК" (ЗАО) в г.Санкт-Петербурге К/С 30101810900000000703 БИК 044030703

Компания «Life Electronics» занимается поставками электронных компонентов импортного и отечественного производства от производителей и со складов крупных дистрибьюторов Европы, Америки и Азии.

С конца 2013 года компания активно расширяет линейку поставок компонентов по направлению коаксиальный кабель, кварцевые генераторы и конденсаторы (керамические, пленочные, электролитические), за счёт заключения дистрибьюторских договоров

Мы предлагаем:

- *Конкурентоспособные цены и скидки постоянным клиентам.*
- *Специальные условия для постоянных клиентов.*
- *Подбор аналогов.*
- *Поставку компонентов в любых объемах, удовлетворяющих вашим потребностям.*

- *Приемлемые сроки поставки, возможна ускоренная поставка.*
- *Доставку товара в любую точку России и стран СНГ.*
- *Комплексную поставку.*
- *Работу по проектам и поставку образцов.*
- *Формирование склада под заказчика.*

- *Сертификаты соответствия на поставляемую продукцию (по желанию клиента).*
- *Тестирование поставляемой продукции.*
- *Поставку компонентов, требующих военную и космическую приемку.*
- *Входной контроль качества.*
- *Наличие сертификата ISO.*

В составе нашей компании организован Конструкторский отдел, призванный помогать разработчикам, и инженерам.

Конструкторский отдел помогает осуществить:

- *Регистрацию проекта у производителя компонентов.*
- *Техническую поддержку проекта.*
- *Защиту от снятия компонента с производства.*
- *Оценку стоимости проекта по компонентам.*
- *Изготовление тестовой платы монтаж и пусконаладочные работы.*

Тел: +7 (812) 336 43 04 (многоканальный)
Email: org@lifeelectronics.ru

www.lifeelectronics.ru