# Model 358P/L

## Advanced PLL LVPECL or LVDS VCXO

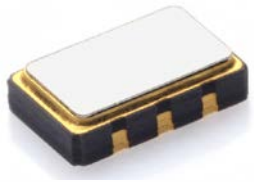

Part Dimensions:
5.0 × 3.2 × 1.3mm • 58.1mg

## Features

- Ceramic Surface Mount Package
- Low Phase Jitter Performance, 500fs Typical
- Advanced PLL Design w/ Low Fundamental Crystal
- Frequency Range 10MHz – 800MHz *
- +2.5V or +3.3V Operation
- Output Enable Standard
- Tape and Reel Packaging, EIA-418

## Applications

- Broadcast Video
- Storage Area Networking
- Broadband Access
- Phase-Locked Loop
- Networking Equipment
- Ethernet/GbE/SyncE
- Fiber Channel
- Test and Measurement

Standard Frequencies

| | | |
|---|---|---|
| - 25.00MHz | - 122.88MHz | - 200.00MHz |
| - 50.00MHz | - 125.00MHz | - 250.00MHz |
| - 74.25MHz | - 148.50MHz | - 300.00MHz |
| - 77.76MHz | - 155.52MHz | - 312.50MHz |
| - 100.00MHz | - 156.25MHz | |

* See Page 11 for additional developed frequencies.
Check with factory for availability of frequencies not listed.

## Description

CTS Model 358P/L is a low cost, high performance PLL voltage controlled oscillator supporting differential LVPECL or LVDS outputs. Employing the latest IC technology, M358P/L has excellent stability and low phase jitter performance.

## Ordering Information

| Model | Output Type | Frequency Code [MHz] | Absolute Pull Range | Frequency Stability | Temperature Range | Supply Voltage | Packaging |
|---|---|---|---|---|---|---|---|
| 358 | P | XXX or XXXX | B | 3 | I | 3 | T |

| Code | Output |
|---|---|
| P | LVPECL |
| L | LVDS |

| Code | APR |
|---|---|
| B | ±50ppm |

| Code | Temp. Range |
|---|---|
| C | -20°C to +70°C |
| I | -40°C to +85°C |

| Code | Packing |
|---|---|
| T | 1k pcs./reel |

| Code | Frequency |
|---|---|
| Product Frequency Code [1] | |

| Code | Stability |
|---|---|
| 5 | ±25ppm [2] |
| 4 | ±30ppm |
| 3 | ±50ppm |

| Code | Voltage |
|---|---|
| 2 | +2.5Vdc |
| 3 | +3.3Vdc |

Notes:

1] Refer to document 016-1454-0, Frequency Code Tables.
3-digits for frequencies <100MHz, 4-digits for frequencies 100MHz or greater.

2] Check factory availability when paired with "I" temperature code.

**Not all performance combinations and frequencies may be available.**
**Contact your local CTS Representative or CTS Customer Service for availability.**

This product is specified for use only in standard commercial applications. Supplier disclaims all express and implied warranties and liability in connection with any use of this product in any non-commercial applications or in any application that may expose the product to conditions that are outside of the tolerances provided in its specification.



©2017 CTS® Corporation. Information/product(s) subject to change. No warranty that product(s) will meet the stated specifications for customer specific applications or test equipment. Visit www.ctscorp.com for list of applicable patent(s), more information, or to request a quote.

# Electrical Specifications

## Operating Conditions

| PARAMETER | SYMBOL | CONDITIONS | MIN | TYP | MAX | UNIT |
|---|---|---|---|---|---|---|
| Maximum Supply Voltage | $V_{CC}$ | - | -0.5 | - | 4.0 | V |
| Maximum Control Voltage | $V_C$ | $V_{CC}$ = +2.5V<br>$V_{CC}$ = +3.3V | -0.5<br>-0.5 | -<br>- | 3.0<br>3.8 | V |
| Supply Voltage | $V_{CC}$ | ±5% | 2.375<br>3.135 | 2.5<br>3.3 | 2.625<br>3.465 | V |
| Supply Current<br>LVPECL<br>LVDS | $I_{CC}$ | Maximum Load<br>Maximum Current Value @ +3.3V | -<br>- | 54<br>45 | 88<br>65 | mA |
| Operating Temperature | $T_A$ | - | -20<br>-40 | +25 | +70<br>+85 | °C |
| Storage Temperature | $T_{STG}$ | - | -55 | - | +125 | °C |

## Frequency Stability

| PARAMETER | SYMBOL | CONDITIONS | MIN | TYP | MAX | UNIT |
|---|---|---|---|---|---|---|
| Frequency Range | $f_O$ | - | | 10 - 800 | | MHz |
| Frequency Stability [Note 1] | $\Delta f/f_O$ | - | | 25, 30 or 50 | | ±ppm |
| Absolute Pull Range [Note 2] | APR | - | 50 | - | - | ±ppm |
| Aging | $\Delta f/f_{25}$ | First Year @ +25°C, nominal $V_{CC}$ | -3 | - | 3 | ppm |

1.] Inclusive of initial tolerance at time of shipment, changes in supply voltage, load, temperature and 1st year aging.

2.] Minimum guaranteed frequency shift from $f_O$ over variations in temperature, aging, power supply and load.

## Output Parameters

| PARAMETER | SYMBOL | CONDITIONS | MIN | TYP | MAX | UNIT |
|---|---|---|---|---|---|---|
| Output Type | - | - | | LVPECL | | - |
| Output Load | $R_L$ | Terminated to $V_{CC}$ - 2.0V | - | 50 | - | Ohms |
| Output Voltage Levels | $V_{OH}$<br>$V_{OL}$ | PECL Load | $V_{CC}$ - 1.03<br>$V_{CC}$ - 1.85 | -<br>- | $V_{CC}$ - 0.60<br>$V_{CC}$ - 1.60 | V |
| Output Duty Cycle | SYM | @ $V_{CC}$ - 1.3V | 45 | - | 55 | % |
| Rise and Fall Time | $T_R$, $T_F$ | @ 20%/80% Levels, $R_L$ = 50 Ohms | - | 0.25 | 0.70 | ns |
| | | | | | | |
| Output Type | - | - | | LVDS | | - |
| Output Load | $R_L$ | Between Outputs | - | 100 | - | Ohms |
| Output Voltage Levels | $V_{OH}$<br>$V_{OL}$ | LVDS Load | -<br>0.90 | 1.43<br>1.10 | 1.60<br>- | V |
| Output Duty Cycle | SYM | @ 1.25V | 45 | - | 55 | % |
| Differential Output Voltage | $V_{OD}$ | $R_L$ = 100 Ohms | 175 | 330 | 454 | mV |
| Offset Voltage | $V_{OS}$ | LVDS Load | 1.20 | 1.25 | 1.30 | V |
| Rise and Fall Time | $T_R$, $T_F$ | @ 20%/80% Levels, $R_L$ = 100 Ohms | - | 0.4 | 0.7 | ns |



©2017 CTS® Corporation. Information/product(s) subject to change. No warranty that product(s) will meet the stated specifications for customer specific applications or test equipment. Visit www.ctscorp.com for list of applicable patent(s), more information, or to request a quote.

# Electrical Specifications

## Output Parameters

| PARAMETER | SYMBOL | CONDITIONS | MIN | TYP | MAX | UNIT |
|---|---|---|---|---|---|---|
| Start Up Time | $T_S$ | Application of $V_{CC}$ | - | 3 | 5 | ms |
| Enable Function [Tri-State] | | | | | | |
| Enable Input Voltage | $V_{IH}$ | Pin 1 Logic '1', Output Enabled | $0.7V_{CC}$ | - | - | V |
| Disable Input Voltage | $V_{IL}$ | Pin 1 Logic '0', Output Disabled | - | - | $0.3V_{CC}$ | V |
| Disable Current | $I_{IL}$ | Pin 1 Logic '0', Output Disabled | - | 16 | 22 | mA |
| Enable Time | $T_{PLZ}$ | Pin 1 Logic '1', Output Enabled | - | - | 200 | ns |
| Phase Jitter, RMS | tjrms | Bandwidth 12 kHz - 20 MHz | - | 500 | <1000 | fs |
| Period Jitter, RMS | pjrms | - | - | 2.5 | - | ps |
| Period Jitter, pk-pk | pjpk-pk | - | - | 25 | - | ps |

## Control Voltage

| PARAMETER | SYMBOL | CONDITIONS | MIN | TYP | MAX | UNIT |
|---|---|---|---|---|---|---|
| Control Voltage | $V_C$ | $V_{CC}$ = 2.5V<br>$V_{CC}$ = 3.3V | 0.2<br>0.3 | 1.25<br>1.65 | 2.3<br>3.0 | V |
| Frequency Deviation | $\Delta f/f_O$ | $V_C$ = 0.2V<br>$V_C$ = 2.3V | | -60 to -180<br>60 to 180 | | ppm |
| | | $V_C$ = 0.3V<br>$V_C$ = 3.0V | | -60 to -180<br>60 to 180 | | ppm |
| Linearity | L | Best Straight Line Fit | - | - | ±15 | % |
| Gain Transfer | $K_V$ | Pull Sensitivity; @ +1.25V, +25°C<br>Pull Sensitivity; @ +1.65V, +25°C | - | 80 | 260 | ppm/V |
| Input Impedance | $Z_{Vc}$ | - | 1 | - | - | MOhms |
| Modulation Roll-off | - | @ -3dB | 10 | - | - | kHz |
| Transfer Function | - | - | | Positive | | - |

## Enable Truth Table

| Pin 2 | Pin 4 & Pin 5 |
|---|---|
| Logic '1' | Output |
| Open | Output |
| Logic '0' | High Imp. |



©2017 CTS® Corporation. Information/product(s) subject to change. No warranty that product(s) will meet the stated specifications for customer specific applications or test equipment. Visit www.ctscorp.com for list of applicable patent(s), more information, or to request a quote.

# Electrical Specifications

## Test Circuit

LVPECL

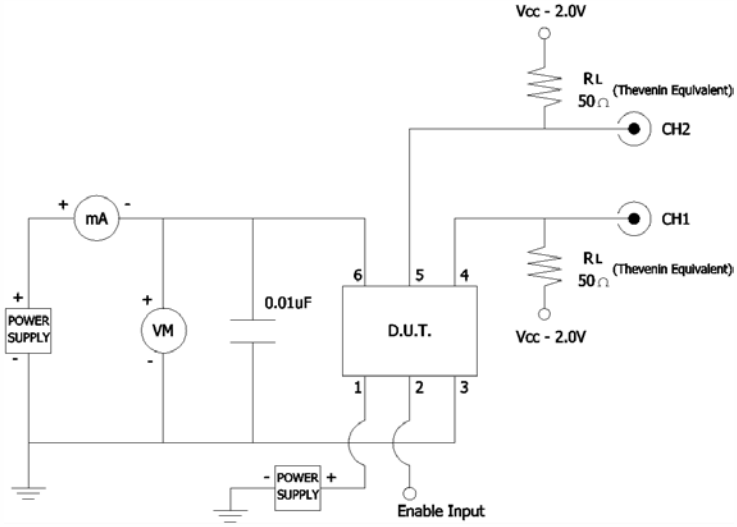


LVDS

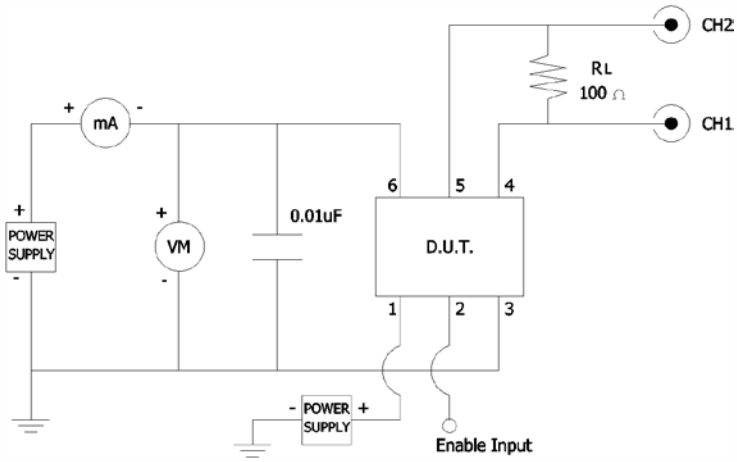


## Output Waveform

LVPECL or LVDS

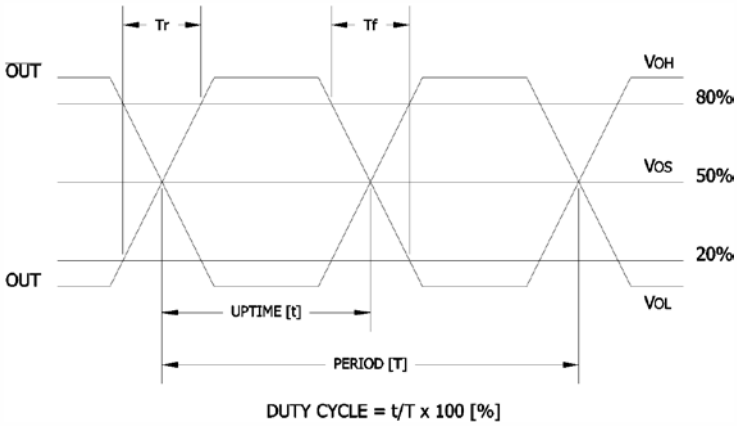




©2017 CTS® Corporation. Information/product(s) subject to change. No warranty that product(s) will meet the stated specifications for customer specific applications or test equipment. Visit www.ctscorp.com for list of applicable patent(s), more information, or to request a quote.

# Electrical Specifications

## Performance Data

### Phase Noise [typical]

19.44MHz, LVDS, $V_{CC}$ = +3.3V, $V_C$ = +1.65V, $T_A$ = +25°C

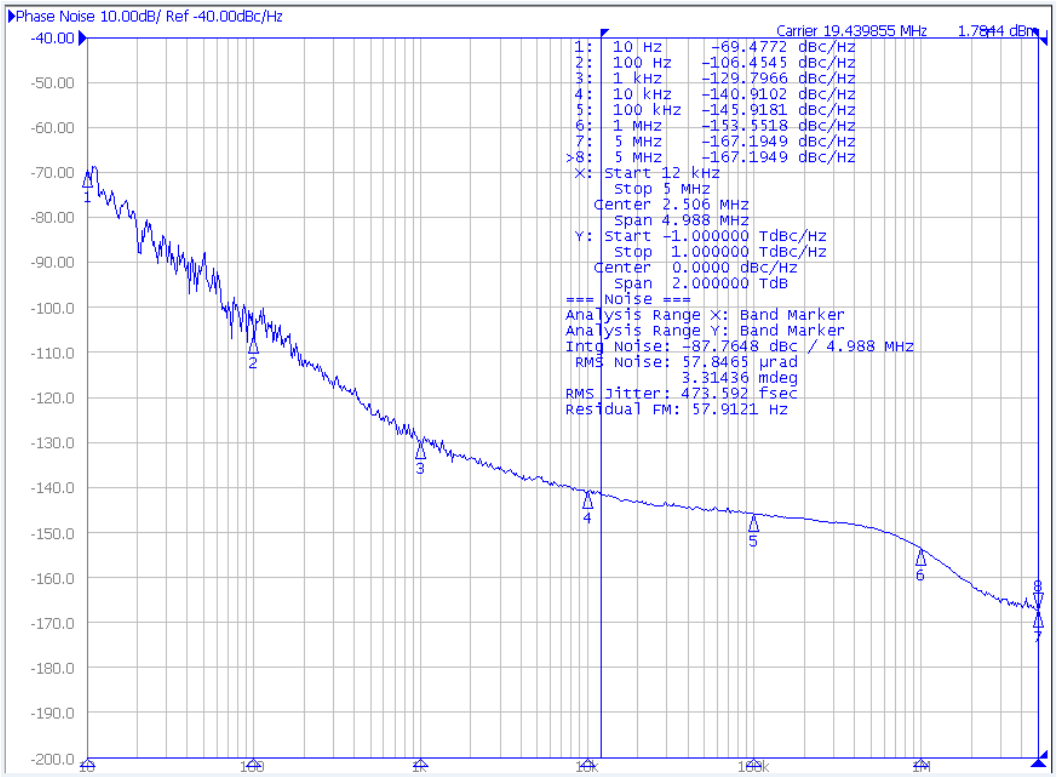


### Phase Noise Tabulated

19.44MHz, LVDS, $V_{CC}$ = +3.3V, $V_C$ = +1.65V, $T_A$ = +25°C

| PARAMETER | SYMBOL | CONDITIONS | TYP | UNIT |
|---|---|---|---|---|
| LVDS @ 19.44MHz | | | | |
| Phase Noise | | Single Side Band | | |
| | | @ 10Hz | -69.4772 | |
| | | @ 100Hz | -106.4545 | |
| | | @ 1kHz | -129.7966 | |
| | - | @ 10kHz | -140.9102 | dBc/Hz |
| | | @ 100kHz | -145.9181 | |
| | | @ 1MHz | -153.5518 | |
| | | @ 5MHz | -167.1949 | |
| | | @ 5MHz | -167.1949 | |
| Phase Jitter, RMS | tjrms | Integration Bandwidth 12kHz - 5MHz | 473.5920 | fs |



©2017 CTS® Corporation. Information/product(s) subject to change. No warranty that product(s) will meet the stated specifications for customer specific applications or test equipment. Visit www.ctscorp.com for list of applicable patent(s), more information, or to request a quote.

# Electrical Specifications

## Performance Data

### Phase Noise [typical]

100MHz, LVPECL, $V_{CC}$ = +3.3V, $V_C$ = +1.65V, $T_A$ = +25°C

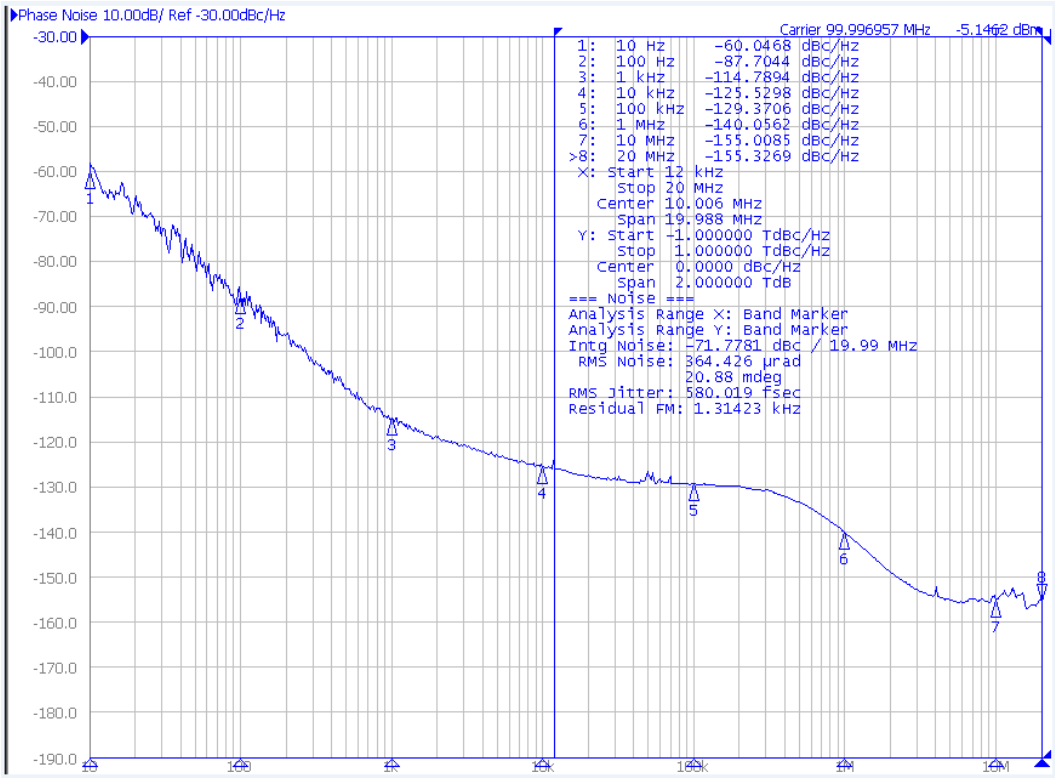


### Phase Noise Tabulated

100MHz, LVPECL, $V_{CC}$ = +3.3V, $V_C$ = +1.65V, $T_A$ = +25°C

| PARAMETER | SYMBOL | CONDITIONS | TYP | UNIT |
|---|---|---|---|---|
| LVPECL @ 100MHz | | | | |
| Phase Noise | | Single Side Band | | |
| | | @ 10Hz | -60.0468 | |
| | | @ 100Hz | -87.7044 | |
| | | @ 1kHz | -114.7894 | |
| | - | @ 10kHz | -125.5298 | dBc/Hz |
| | | @ 100kHz | -129.3706 | |
| | | @ 1MHz | -140.0562 | |
| | | @ 10MHz | -155.0085 | |
| | | @ 20MHz | -155.3269 | |
| Phase Jitter, RMS | tjrms | Integration Bandwidth 12kHz - 20MHz | 580.0190 | fs |



©2017 CTS® Corporation. Information/product(s) subject to change. No warranty that product(s) will meet the stated specifications for customer specific applications or test equipment. Visit www.ctscorp.com for list of applicable patent(s), more information, or to request a quote.

# Electrical Specifications

## Performance Data

### Phase Noise [typical]

155.52MHz, LVPECL, $V_{CC}$ = +3.3V, $V_C$ = +1.65V, $T_A$ = +25°C

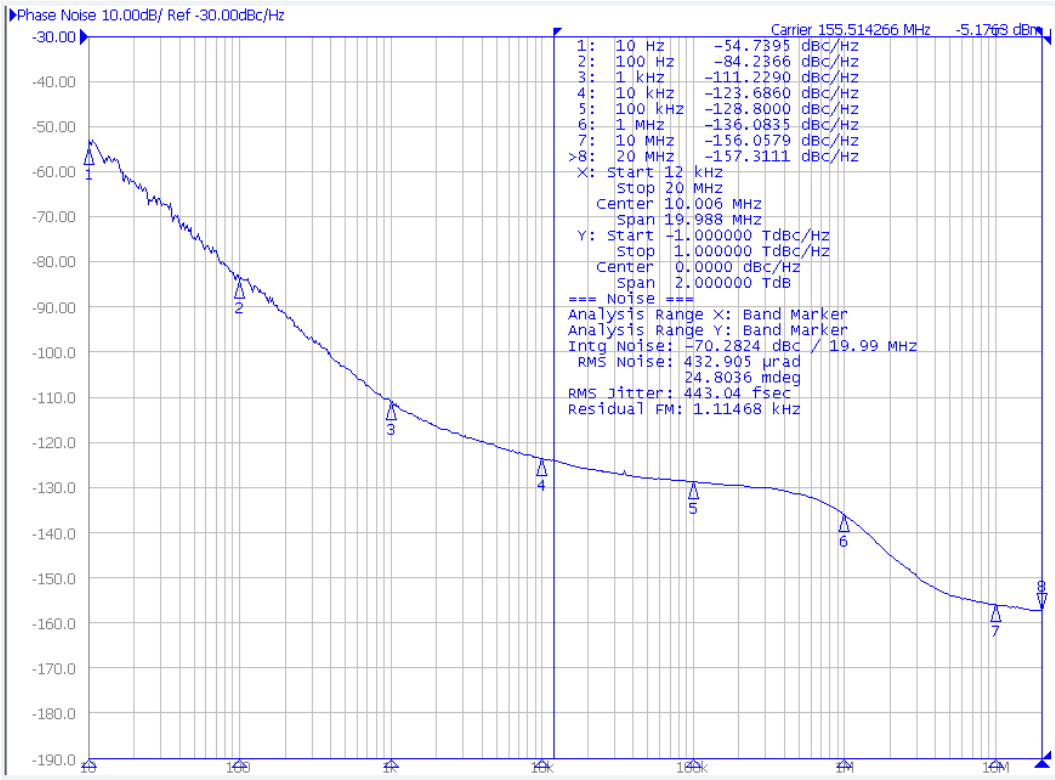


### Phase Noise Tabulated

155.52MHz, LVPECL, $V_{CC}$ = +3.3V, $V_C$ = +1.65V, $T_A$ = +25°C

| PARAMETER | SYMBOL | CONDITIONS | TYP | UNIT |
|---|---|---|---|---|
| LVPECL @ 155.52MHz | | | | |
| Phase Noise | | Single Side Band | | |
| | | @ 10Hz | -54.7395 | |
| | | @ 100Hz | -84.2366 | |
| | | @ 1kHz | -111.2290 | |
| | - | @ 10kHz | -123.6860 | dBc/Hz |
| | | @ 100kHz | -128.8000 | |
| | | @ 1MHz | -136.0835 | |
| | | @ 10MHz | -156.0579 | |
| | | @ 20MHz | -157.3111 | |
| Phase Jitter, RMS | tjrms | Integration Bandwidth 12kHz - 20MHz | 443.0400 | fs |



©2017 CTS® Corporation. Information/product(s) subject to change. No warranty that product(s) will meet the stated specifications for customer specific applications or test equipment. Visit www.ctscorp.com for list of applicable patent(s), more information, or to request a quote.

# Mechanical Specifications

## Package Drawing

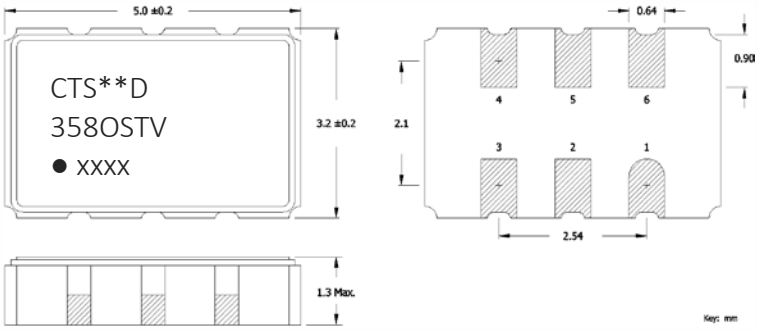


## Marking Information

1. ** – Manufacturing Site Code.
2. D – Date Code. See Table I for codes.
3. O – Output Type; P = LVPECL, L = LVDS.
4. ST – Frequency Stability/Temperature Code. [Refer to Ordering Information]
5. V – Voltage Code; 3 = 3.3V, 2 = 2.5V.
6. xxxx – Frequency Code.
   3-digits, frequencies below 100MHz
   4-digits, frequencies 100MHz or greater

[See document 016-1454-0, Frequency Code Tables.]

## Recommended Pad Layout

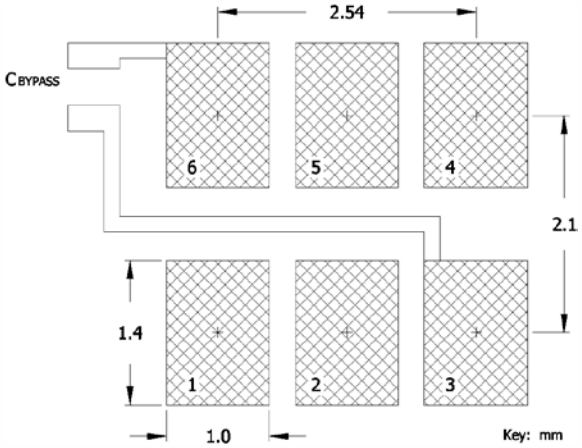


## Notes

1. JEDEC termination code (e4). Barrier-plating is nickel [Ni] with gold [Au] flash plate.
2. Reflow conditions per JEDEC J-STD-020; +260°C maximum, 20 seconds.
3. MSL = 1.

## Pin Assignments

| Pin | Symbol | Function |
|---|---|---|
| 1 | $V_C$ | Voltage Control |
| 2 | EOH | Enable [tri-state] |
| 3 | GND | Circuit & Package Ground |
| 4 | Output | RF Output |
| 5 | $\overline{\text{Output}}$ | Complimentary RF Output |
| 6 | $V_{CC}$ | Supply Voltage |

## Table I - Date Code

| YEAR \ MONTH | | | | | JAN | FEB | MAR | APR | MAY | JUN | JUL | AUG | SEP | OCT | NOV | DEC |
|---|---|---|---|---|---|---|---|---|---|---|---|---|---|---|---|---|
| 2001 | 2005 | 2009 | 2013 | 2017 | A | B | C | D | E | F | G | H | J | K | L | M |
| 2002 | 2006 | 2010 | 2014 | 2018 | N | P | Q | R | S | T | U | V | W | X | Y | Z |
| 2003 | 2007 | 2011 | 2015 | 2019 | a | b | c | d | e | f | g | h | j | k | l | m |
| 2004 | 2008 | 2012 | 2016 | 2020 | n | p | q | r | s | t | u | v | w | x | y | z |



©2017 CTS® Corporation. Information/product(s) subject to change. No warranty that product(s) will meet the stated specifications for customer specific applications or test equipment. Visit www.ctscorp.com for list of applicable patent(s), more information, or to request a quote.

## Packaging - Tape and Reel

### Tape Drawing – 12mm Width

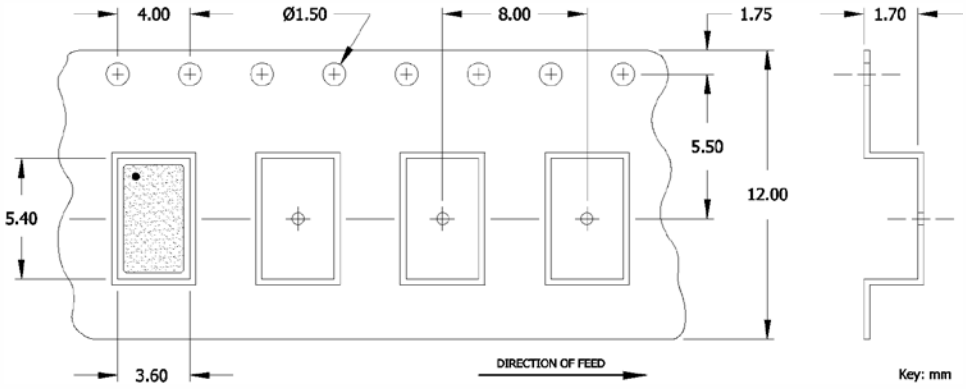


### Tape Drawing – 16mm Width

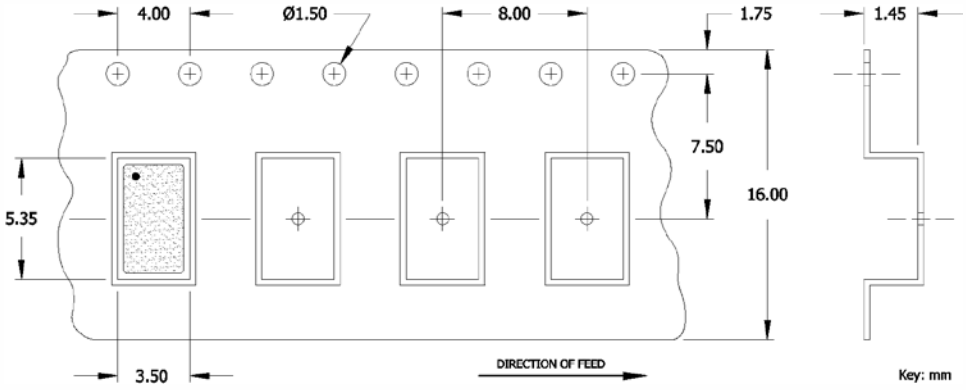




©2017 CTS® Corporation. Information/product(s) subject to change. No warranty that product(s) will meet the stated specifications for customer specific applications or test equipment. Visit www.ctscorp.com for list of applicable patent(s), more information, or to request a quote.

## Packaging - Tape and Reel

### Reel Drawing – 12mm Width

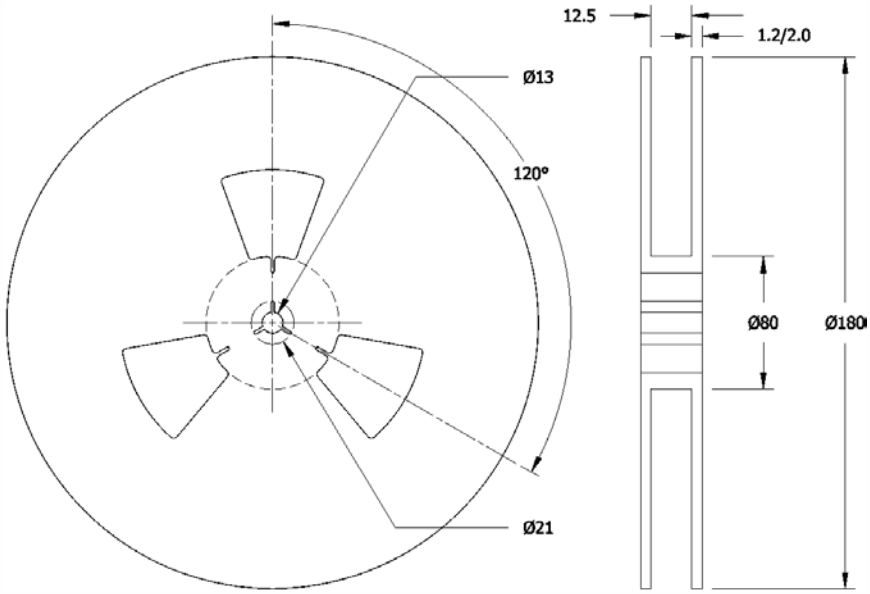


### Reel Drawing – 16mm Width

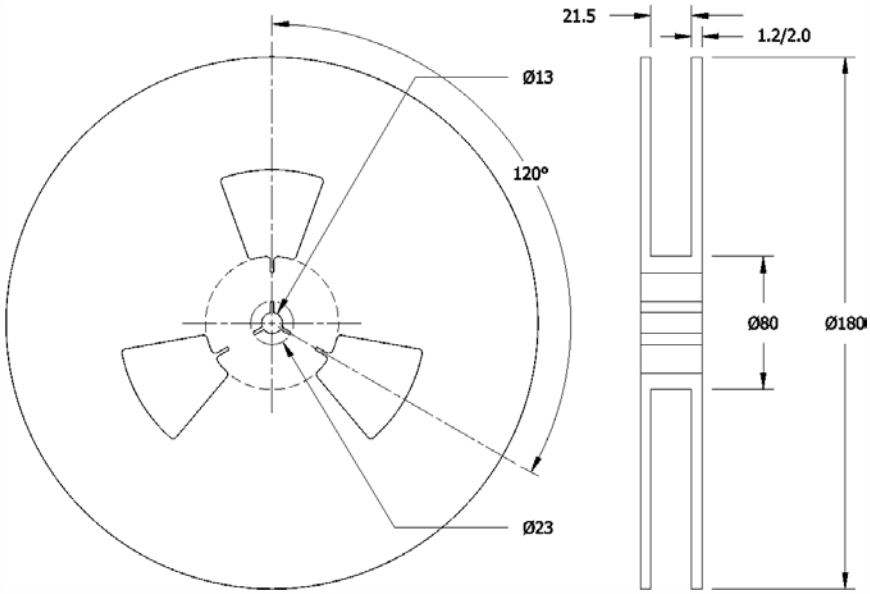


### Notes

1. Device quantity is 1k pieces per 180mm reel.
2. Complete CTS part number, frequency value and date code information must appear on reel and carton labels.



©2017 CTS® Corporation. Information/product(s) subject to change. No warranty that product(s) will meet the stated specifications for customer specific applications or test equipment. Visit www.ctscorp.com for list of applicable patent(s), more information, or to request a quote.

# Addendum

## Additional Developed Frequencies – MHz

| FREQUENCY | FREQUENCY CODE | FREQUENCY | FREQUENCY CODE | FREQUENCY | FREQUENCY CODE | FREQUENCY | FREQUENCY CODE |
|---|---|---|---|---|---|---|---|
| 27.000000 | 270 | 74.175800 | 74A | 144.500000 | 1445 | 322.265625 | 322A |
| 38.840000 | 38D | 76.800000 | 768 | 148.351648 | 148B | 349.400000 | 3494 |
| 38.880000 | 388 | 86.700000 | 867 | 150.000000 | 1500 | 400.000000 | 4000 |
| 43.350000 | 433 | 87.351542 | 873 | 153.600000 | 1536 | 448.000000 | 4480 |
| 45.000000 | 450 | 92.160000 | 921 | 156.253906 | 156A | 622.080000 | 6220 |
| 54.000000 | 540 | 106.250000 | 1062 | 160.000000 | 1600 | | |
| 62.500000 | 625 | 132.000000 | 1320 | 184.320000 | 1843 | | |

## Frequency Codes for Cover Page Table – MHz

| FREQUENCY | FREQUENCY CODE | FREQUENCY | FREQUENCY CODE | FREQUENCY | FREQUENCY CODE |
|---|---|---|---|---|---|
| 25.000000 | 250 | 122.880000 | 1228 | 200.000000 | 2000 |
| 50.000000 | 500 | 125.000000 | 1250 | 250.000000 | 2500 |
| 74.250000 | 742 | 148.500000 | 1485 | 300.000000 | 3000 |
| 77.760000 | 777 | 155.520000 | 1555 | 312.500000 | 3125 |
| 100.000000 | 1000 | 156.250000 | 1562 | | |



©2017 CTS® Corporation. Information/product(s) subject to change. No warranty that product(s) will meet the stated specifications for customer specific applications or test equipment. Visit www.ctscorp.com for list of applicable patent(s), more information, or to request a quote.

ООО «ЛайфЭлектроникс» “LifeElectronics” LLC

ИНН 7805602321 КПП 780501001 Р/С 40702810122510004610 ФАКБ "АБСОЛЮТ БАНК" (ЗАО) в г.Санкт-Петербурге К/С 30101810900000000703 БИК 044030703

*Компания «Life Electronics» занимается поставками электронных компонентов импортного и отечественного производства от производителей и со складов крупных дистрибьюторов Европы, Америки и Азии.*

*С конца 2013 года компания активно расширяет линейку поставок компонентов по направлению коаксиальный кабель, кварцевые генераторы и конденсаторы (керамические, пленочные, электролитические), за счёт заключения дистрибьюторских договоров*

*Мы предлагаем:*

- *Конкурентоспособные цены и скидки постоянным клиентам.*
- *Специальные условия для постоянных клиентов.*
- *Подбор аналогов.*
- *Поставку компонентов в любых объемах, удовлетворяющих вашим потребностям.*

- *Приемлемые сроки поставки, возможна ускоренная поставка.*
- *Доставку товара в любую точку России и стран СНГ.*
- *Комплексную поставку.*
- *Работу по проектам и поставку образцов.*
- *Формирование склада под заказчика.*

- *Сертификаты соответствия на поставляемую продукцию (по желанию клиента).*
- *Тестирование поставляемой продукции.*
- *Поставку компонентов, требующих военную и космическую приемку.*
- *Входной контроль качества.*
- *Наличие сертификата ISO.*

*В составе нашей компании организован Конструкторский отдел, призванный помогать разработчикам, и инженерам.*

*Конструкторский отдел помогает осуществить:*

- *Регистрацию проекта у производителя компонентов.*
- *Техническую поддержку проекта.*
- *Защиту от снятия компонента с производства.*
- *Оценку стоимости проекта по компонентам.*
- *Изготовление тестовой платы монтаж и пусконаладочные работы.*

*Тел: +7 (812) 336 43 04 (многоканальный)*
*Email: org@lifeelectronics.ru*

***www.lifeelectronics.ru***