Tippette Switches

The Tippette Series is a traditionally styled rocker switch, available in sealed or unsealed versions. These switches are appropriate for use in those applications not requiring the more stringent sealing protection of the V-Series and L-Series switches. The Tippette Series is available in both illuminated and non-illuminated versions and features a wide variety of circuits, actuator styles and bracket options. This versatile offering includes international agency certifications and ratings to 26 amps for select circuits.

Electrical

Contact Rating	15 amps, 125 VAC 10 amps, 250 VAC 3/4 HP 125-250 VAC 15 amps, 12-30 VDC
Life	25,000 cycles circuit dependent 50,000 cycles circuit dependent consult factory for applicable circuits.
Contacts	Fine silver, silver cad-oxide
Terminals	Brass or copper/silver plate 1/4" (6.3mm) Quick Connect terminations standard. Solder lug - Brass Tin Plated Wire Lead 16 gauge standard 105°C 600VAC Screw Terminals - Brass

Mechanical

Endurance	100,000 cycles minimum

Physical

Lighted	Incandescent - rated 10,000 hours Neon - rated 25,000 hours
Seals	Bracket - Actuator WBL/MBL optional external gasket panel seal
Base	Phenolic (150°C)
Rocker/Bracket	Nylon 66 (105°C)

Agency Certifications

Select circuits and constructions with IEC approvals are available. Consult factory.

Mounting

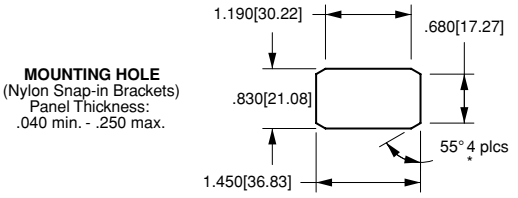

*Angled corners are suggested for optimum fit.
Standard rectangular cutout is acceptable.

TIGA51 - 6M - BL - MBL

1 Base Part Number | 2 Actuator Style | 3 Actuator Color | 4 Bracket

1 BASE PART NUMBER: SERIES/POLES/CIRCUITRY[8, 11,13]/RATING[7]/TERMINATION[10]

10A 250VAC, 15A 125VAC, 3/4 HP 125-250VAC, 15A 6-28VDC[7]

Single Pole in Double Pole base [2]					*Double Pole*			
solder lug	*.250 tab*	*screw term.*	*wire leads*		*solder lug*	*.250 tab*	*screw term.*	*wire leads*
TIGA50	**TIGA51**	**TIGA54**	**TIGA55**	ON-NONE-OFF	**TIGK50**	**TIGK51**	**TIGK54**	**TIGK55**
TIGA5A	**TIGA5B**	**TIGA5E**	**TIGA5F**	(ON)-NONE-OFF	**TIGK5A**	**TIGK5B**	**TIGK5E**	**TIGK5F**
TIGA5L	**TIGA5M**	**TIGA5S**	**TIGA5T**	ON-NONE-(OFF)	**TIGK5L**	**TIGK5M**	**TIGK5S**	**TIGK5T**
TIGB50	**TIGB51**	**TIGB54**	**TIGB55**	ON-NONE-ON	**TIGL50**	**TIGL51**	**TIGL54**	**TIGL55**
TIGB5A	**TIGB5B**	**TIGB5E**	**TIGB5F**	ON-NONE-(ON)	**TIGL5A**	**TIGL5B**	**TIGL5E**	**TIGL5F**
TIGC50	**TIGC51**	**TIGC54**	**TIGC54**	ON-OFF-ON	**TIGM50**	**TIGM51**	**TIGM54**	**TIGM55**
TIGC5A	**TIGC5B**	**TIGC5E**	**TIGC5F**	ON--OFF-(ON)	**TIGM5A**	**TIGM5B**	**TIGM5E**	**TIGM5F**
TIGC5L	**TIGC5M**	**TIGC5S**	**TIGC5T**	(ON)-OFF-(ON)	**TIGM5L**	**TIGM5M**	**TIGM5S**	**TIGM5T**

Three Pole					*Four Pole*			
solder lug	*.250 tab*	*screw term.*	*wire leads*		*solder lug*	*.250 tab*	*screw term.*	*wire leads*
TIHK50	**TIHK51**	**TIHK54**	**TIHK55**	ON-NONE-OFF	**TIIK50**	**TIIK51**	**TIIK54**	**TIIK55**
TIHK5A	**TIHK5B**	**TIHK5E**	**TIHK5F**	(ON)-NONE-OFF	**TIIK5A**	**TIIK5B**	**TIIK5E**	**TIIK5F**
TIHK5L	**TIHK5M**	**TIHK5S**	**TIHK5T**	ON-NONE-(OFF)	**TIIK5L**	**TIIK5M**	**TIIK5S**	**TIIK5T**
TIHL50	**TIHL51**	**TIHL54**	**TIHL55**	ON-NONE-ON	**TIIL50**	**TIIL51**	**TIIL54**	**TIIL55**
TIHL5A	**TIHL5B**	**TIHL5E**	**TIHL5F**	ON-NONE-(ON)	**TIIL5A**	**TIIL5B**	**TIIL5E**	**TIIL5F**
TIHM50	**TIHM51**	**TIHM54**	**TIHM54**	ON-OFF-ON	**TIIM50**	**TIIM51**	**TIIM54**	**TIIM55**
TIHM5A	**TIHM5B**	**TIHM5E**	**TIHM5F**	ON--OFF-(ON)	**TIIM5A**	**TIIM5B**	**TIIM5E**	**TIIM5F**
TIHM5L	**TIHM5M**	**TIHM5S**	**TIHM5T**	(ON)-OFF-(ON)	**TIIM5L**	**TIIM5M**	**TIIM5S**	**TIIM5T**

VDE APPROVED

10A 250VAC, 15A 125VAC, 12(6)A 250VAC T85

Single Pole in Double Pole base[2]				*Double Pole*		
solder lug	*.250 tab*	*wire lead*		*solder lug*	*.250 tab*	*wire lead*
TIGA90	**TIGA91**	**TIGA95**	ON-NONE-OFF	**TIGK90**	**TIGK91**	**TIGK95**
TIGB90	**TIGB91**	**TIGB95**	ON-NONE-ON	**TIGL90**	**TIGL91**	**TIGL95**
TIGC90	**TIGC91**	**TIGC95**	ON-OFF-ON	**TIGM90**	**TIGM91**	**TIGM95**

Additional ratings up to 20A 125-277VAC, 1 1/2HP 125 VAC, 2HP 250VAC are available. Consult factory for specifics.

2 ACTUATOR STYLE

1S	Angular/Smooth Face Gloss[12]	**6M**	Curved/Smooth Face Matte[3]
1C	Angular/Cross Serations Gloss[12]	**6S**	Curved/Smooth Face Gloss[3]
1F	Flatted/Smooth Face Gloss[12]	**7S**	Rounded Paddle/Smooth Face Gloss[1]
1L	Angular/Longline Serrations Gloss[1,12]	**7N**	Witch's Hat/Narrow[15]
2L	Long Smooth/Narrow[16]	**7P**	Witch's Hat/Wide[15]

3 ACTUATOR COLOR[9]

BL black **WH** white **RD** red

4 BRACKET STYLE[9]

A	Screw Mount[5]
B	Screw Mount[5,14]
C	Screw Mount[5]
H	Screw Mount[5]
NBL	Nylon Black
WBL	Watershedding Black[4]
MBL	Marine Style Black[4,6]
FN	Metal Snap-In[5]
FN BLK	Black Metal Snap-In[5]
FN SS	Stainless Steel Snap-In[5]
FW	Wide Stainless Steel Snap-In[5]

NOTES

1 NBL, FN, & FW brackets only.
2 For single pole switch in a single pole base, specify TIL with single pole circuitry/rating/termination.
3 NBL, WBL, & MBL brackets only. With 6M actuator, brackets also will be matte finish.
4 6M & 6S actuators only
5 Not available with 6M & 6S actuators.
6 Consists of WBL bracket, neoprene seal, and dummy rivets at open holes. Consult factory for agency approval status.
7 All ratings are appropriate for usage in low voltage applications.
8 For additional special circuits, see page 21.
9 Custom colors are available, consult factory.
10 .187 tab and PC terminations are also available. Consult factory for catalog number callout.
11 ( ) momentary
12 Not available with WBL or MBL style brackets.
13 Additional circuits available. See page 21.
14 Available with single pole TIL-Series only.
15 Available with bracket A, C or H only.
16 Not available with MBL or H brackets. Can be supplied as a double rocker to control separate poles of a TIG, TIH or TII switch. Consult factory for details.

LTILA51 - 6M - BL - RC - MBL - 12V

1 Base Part Number | 2 Actuator Style | 3 Actuator Color | 4 Lens Color | 5 Bracket | 6 Lamp Voltage

1 BASE PART NUMBER: SERIES/POLES/ILLUMINATION/CIRCUITRY[12]/RATING[10]/TERMINATION[14]

10A 250VAC, 15A 125VAC, 3/4 HP 125-250VAC, 15A 15-28VDC

illuminated Single Pole in Double Pole base					*illuminated Double Pole*			
solder lug	*.250 tab*	*screw term.*	*wire leads*		*solder lug*	*.250 tab*	*screw term*	*wire leads*
LTILA50	**LTILA51**	**LTILA54**	**LTILA55**	ON-NONE-OFF	**LTIGK50**	**LTIGK51**	**LTIGK54**	**LTIGK55**
LTILA5A	**LTILA5B**	**LTILA5E**	**LTILA5F**	(ON)-NONE-OFF	**LTIGK5A**	**LTIGK5B**	**LTIGK5E**	**LTIGK5F**
LTILA5L	**LTILA5M**	**LTILA5S**	**LTILA5T**	ON-NONE-(OFF)	**LTIGK5L**	**LTIGK5M**	**LTIGK5S**	**LTIGK5T**
LTILB50	**LTILB51**	**LTILB54**	**LTILB55**	ON-NONE-ON	**LTIGL50**	**LTIGL51**	**LTIGL54**	**LTIGL55**
LTILB5A	**LTILB5B**	**LTILB5E**	**LTILB5F**	ON-NONE-(ON)	**LTIGL5A**	**LTIGL5B**	**LTIGL5E**	**LTIGL5F**
LTILC50	**LTILC51**	**LTILC54**	**LTILC55**	ON-OFF-ON	**LTIGM50**	**LTIGM51**	**LTIGM54**	**LTIGM55**
LTILC5A	**LTILC5B**	**LTILC5E**	**LTILC5F**	ON--OFF-(ON)	**LTIGM5A**	**LTIGM5B**	**LTIGM5E**	**LTIGM5F**
LTILC5L	**LTILC5M**	**LTILC5S**	**LTILC5T**	(ON)-OFF-(ON)	**LTIGM5L**	**LTIGM5M**	**LTIGM5S**	**LTIGM5T**

Additional ratings up to 12A 250VAC, 17A 125 VAC, 3/4 HP 125 VAC, 1HP 250VAC are available. Consult factory for specifics.

Three pole switch is also available: Substitute H for fourth digit of part number. ex. LTIHK51

NOTES

1 NBL, FN, & FW brackets only. Double pole circuits provided with 3 pole base.
2 LTIL-Series with NBL, FN, & FW brackets only.
3 NBL, WBL, & MBL brackets only. With 6M actuator, bracket will also be matte finish.
4 1S, 1C, 1L & 7S with NBL bracket only available with LTIL-Series.
5 6M, 6S actuators only.
6 Not available with 6M and 6S actuators.
7 Not recommended with neon lamps.
8 Consists of WBL bracket, neoprene seal, dummy rivets at open holes. Consult factory for agency approval status.
9 Not recommended with blue or green lenses.
10 All ratings are appropriate for usage in low voltage applications.
11 Custom colors and additional bracket styles are available, consult factory.
12 ( ) - momentary
13 All double throw circuits supplied with two lenses. To specify two different lens colors, specify second color, after first color. (ex. LTIGM51-6S-BL-RC/GN-WBL-12V)
14 .187 tab and PC terminations are also available. Consult factory for catalog number callout.

2 ACTUATOR STYLE[4]

1S	Angular/Smooth Face Gloss[1]
1C	Angular/Cross Serations Gloss[1]
1L	Angular/Longline Serrations Gloss[1]
6M	Curved/Smooth Face Matte[3]
6S	Curved/Smooth Face Gloss[3]
7S	Rounded Paddle/Smooth Face Gloss[2]

3 ACTUATOR COLOR[11]

BL black **WH** white **RD** red

4 LENS COLOR[13]

AM amber **RC** red **GN** green[7]
LU blue[7] **CL** clear **WH** white

5 BRACKET STYLE[11]

NBL	Nylon Black
WBL	Watershedding Black[5]
MBL	Marine Style Black[5,8]
FN	Metal Snap-In[4,6]
FN BLK	Black Metal Snap-In[4,6]
FN SS	Stainless Steel Snap-In[4,6]

6 LAMP VOLTAGE

incandescent

125N 125 volt **250N** 250 volt

neon[9]

6V 6 volt **12V** 12 volt **18V** 18 volt
24V 24 volt **28V** 28 volt

1C
CROSS-LINE W/ONE LENS

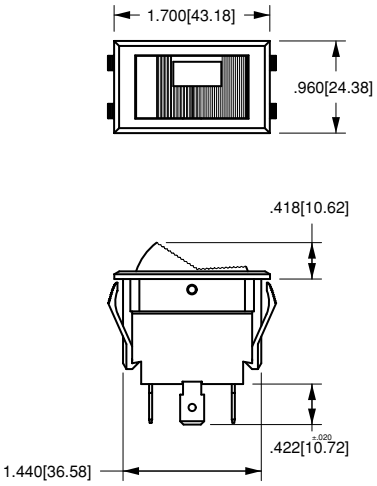

WITH.250 TAB TERMINALS AND NBL BRACKET

1L
LONG-LINE W/ONE LENS

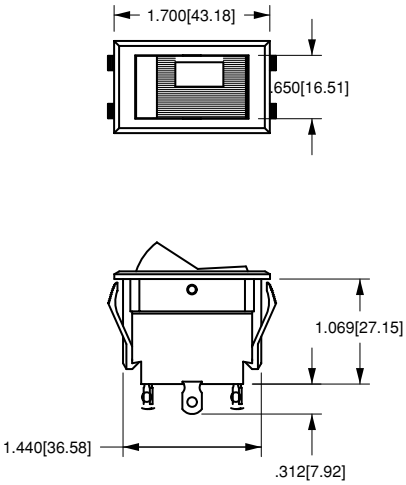

WITH SOLDER LUG TERMINAL AND NBL BRACKET

1S
SMOOTH W/ONE LENS

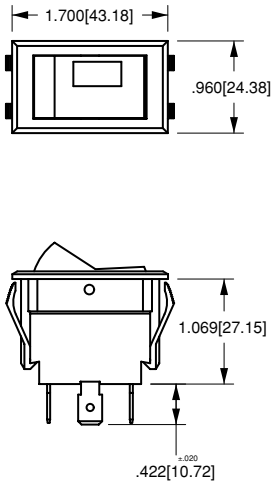

WITH.250 TAB TERMINALS AND NBL BRACKET

1F
FLATTED STYLE NO LENS

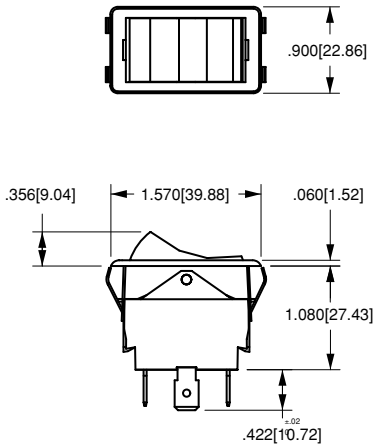

WITH.250 TAB TERMINALS AND FN BRACKET

6M, 6S
CURVED W/ONE LENS

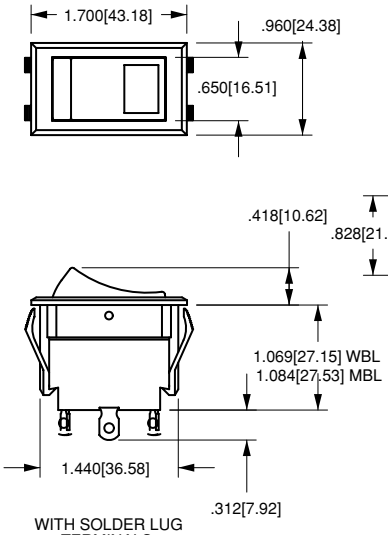

WITH SOLDER LUG TERMINALS AND WBL/MBL BRACKET

7S
TOGGLE-STYLE W/ONE LENS

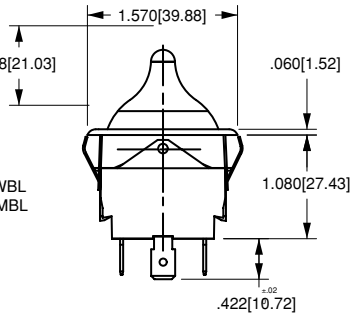

WITH.250 TAB TERMINALS AND FN BRACKET

1C
TII-SERIES CROSS-LINE W ONE LENS

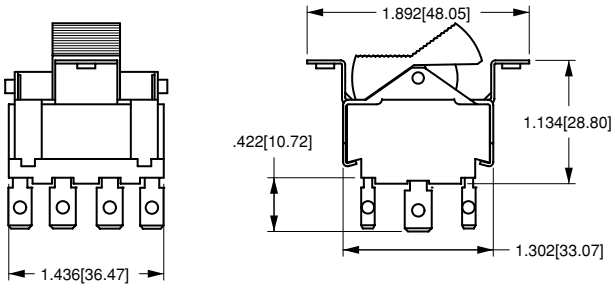

WITH .250 TAB TERMINALS AND A BRACKET

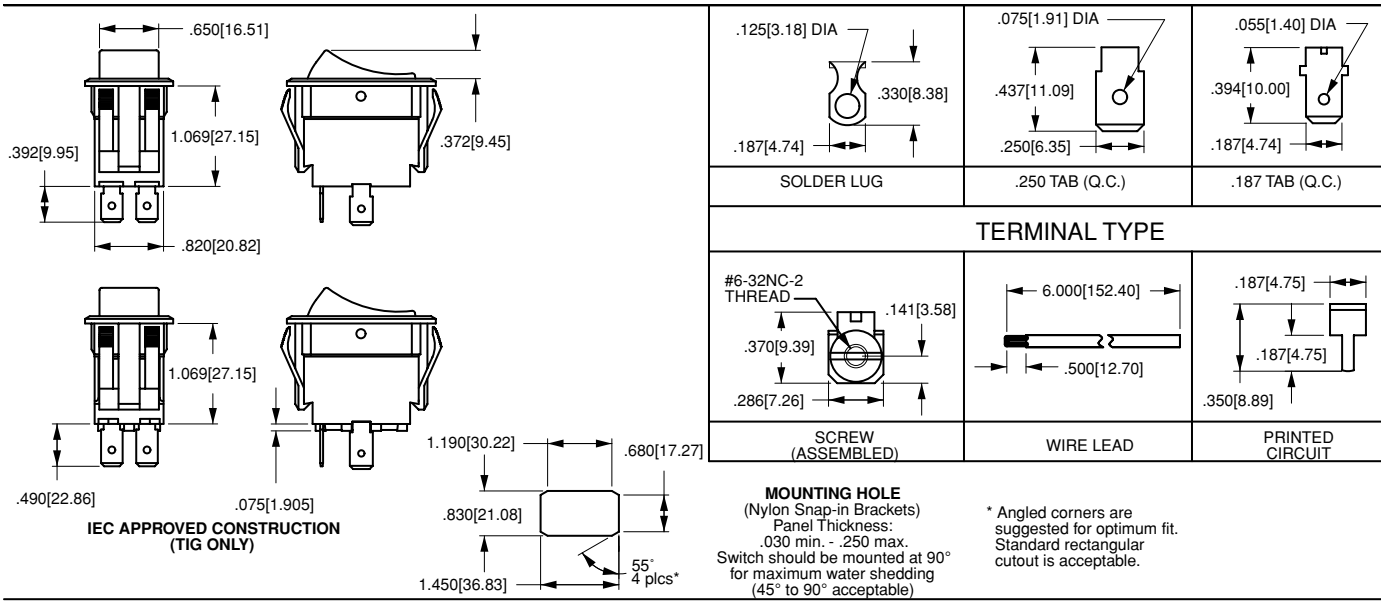

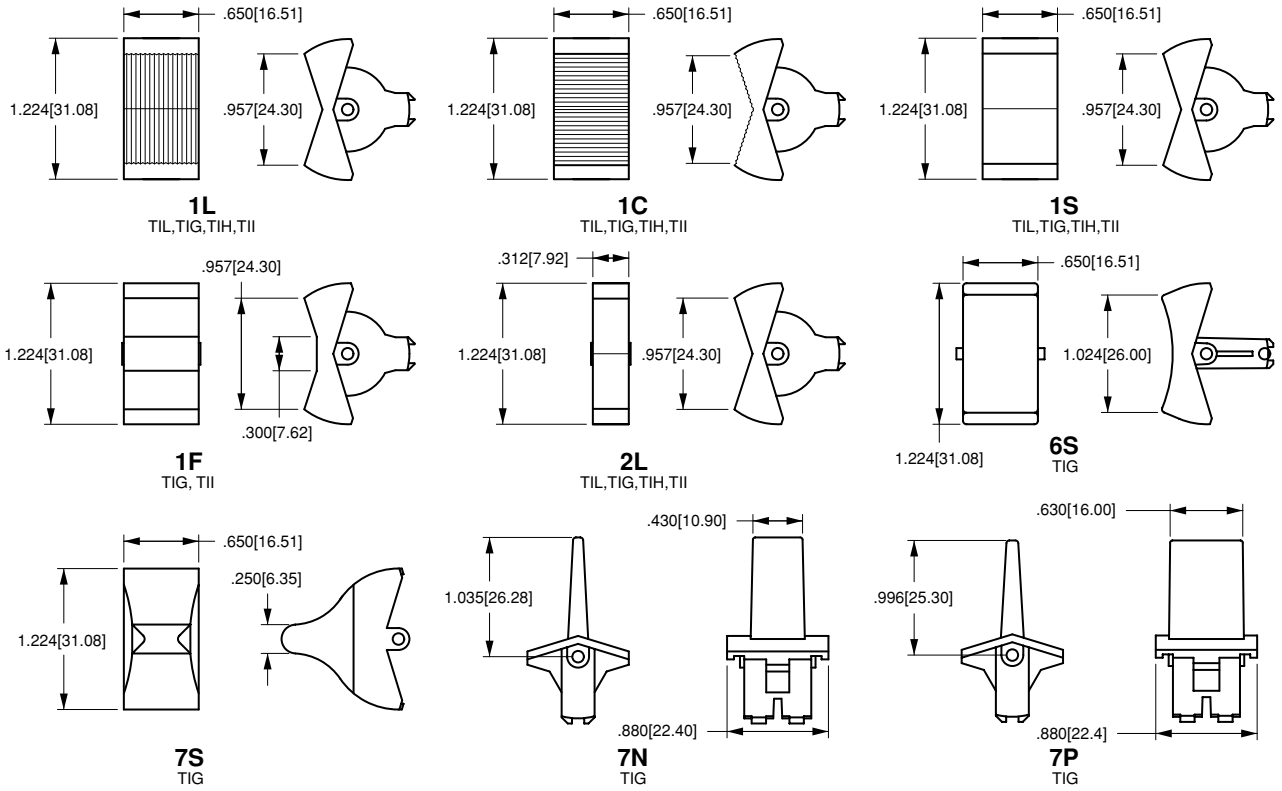

Special Circuits for Tippette Rocker Switches

Circuit	Position 1	Position 2	Position 3
Progressive Two Circuit			
GG	BOTH CIRCUITS ON	ONE CIRCUIT ON	OFF
GG	BOTH CIRCUITS (ON)	ONE CIRCUIT ON	OFF
Single Pole Triple Throw			
GE	ON	ON	ON
Two Circuit			
GH	CIRCUIT 1 ON	BOTH CIRCUITS ON	CIRCUIT 2 ON
GP	CIRCUIT 2 ON	CIRCUIT 1 ON	OFF
Reversing Double Pole Double Throw			
GO	ON	OFF	ON
GX	ON	NONE	ON

( ) Indicates momentary function.

Dimensional Specifications: in. [mm]

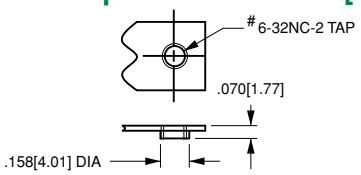

TAPPED HOLE
Standard with
A & B Brackets

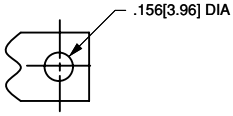

CLEARANCE HOLE
Standard with
C Bracket

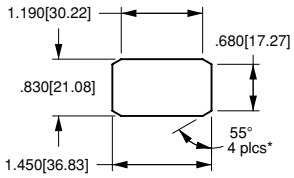

MOUNTING HOLE
(Nylon Snap-in Brackets)
Panel Thickness:
.030 min. - .250 max.
* Angled corners are suggested for optimum fit. Standard rectangular cutout is acceptable.

TIL	TIG	TII	TIH

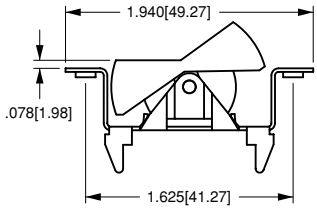

A
TIL

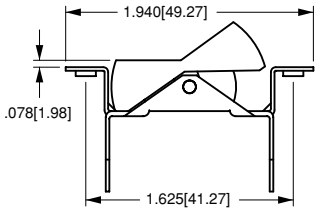

A
TIG

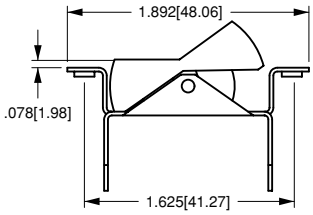

A
TII

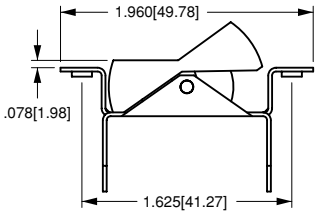

A
TIH

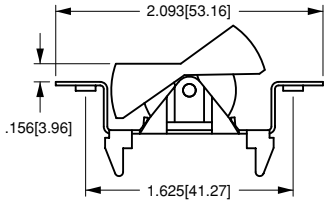

B
TIL

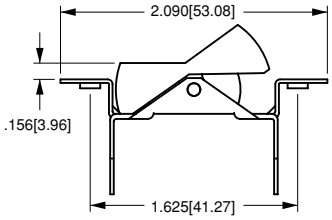

B
TII, TIG

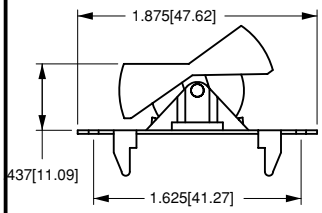

C*
TIL

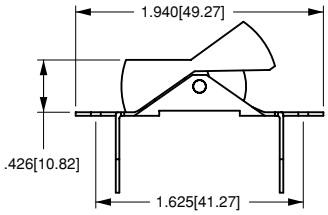

C
TIG

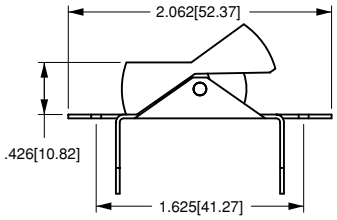

C
TIH, TII

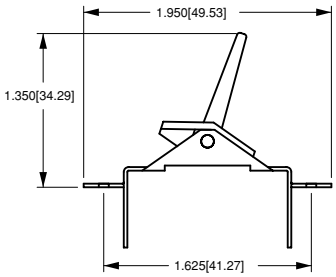

H
TIG

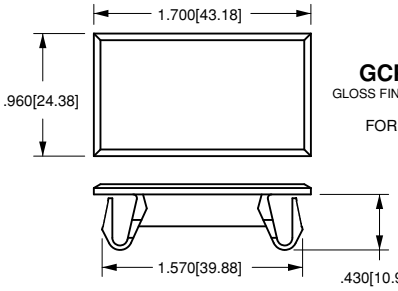

GCP / **GMP**
GLOSS FINISH / MATTE FINISH
HOLE PLUG
FOR TIL, TIG, TIH & TII

NARROW

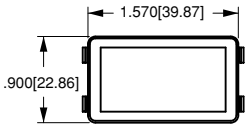

FN
TIL, TIG, TIH, TII
METAL, SNAP-IN

WIDE

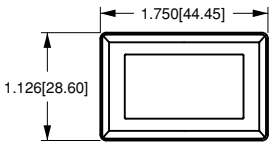

FW
TIL, TIG, TIH, TII
METAL, SNAP-IN

MARINE / STD / WATERSHEDDING

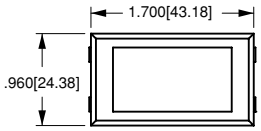

MBL, NBL, WBL
TIG
BLACK NYLON, SNAP-IN

ООО «ЛайфЭлектроникс» “LifeElectronics” LLC

ИНН 7805602321 КПП 780501001 Р/С 40702810122510004610 ФАКБ "АБСОЛЮТ БАНК" (ЗАО) в г.Санкт-Петербурге К/С 30101810900000000703 БИК 044030703

Компания «Life Electronics» занимается поставками электронных компонентов импортного и отечественного производства от производителей и со складов крупных дистрибьюторов Европы, Америки и Азии.

С конца 2013 года компания активно расширяет линейку поставок компонентов по направлению коаксиальный кабель, кварцевые генераторы и конденсаторы (керамические, пленочные, электролитические), за счёт заключения дистрибьюторских договоров

Мы предлагаем:

- *Конкурентоспособные цены и скидки постоянным клиентам.*
- *Специальные условия для постоянных клиентов.*
- *Подбор аналогов.*
- *Поставку компонентов в любых объемах, удовлетворяющих вашим потребностям.*

- *Приемлемые сроки поставки, возможна ускоренная поставка.*
- *Доставку товара в любую точку России и стран СНГ.*
- *Комплексную поставку.*
- *Работу по проектам и поставку образцов.*
- *Формирование склада под заказчика.*

- *Сертификаты соответствия на поставляемую продукцию (по желанию клиента).*
- *Тестирование поставляемой продукции.*
- *Поставку компонентов, требующих военную и космическую приемку.*
- *Входной контроль качества.*
- *Наличие сертификата ISO.*

В составе нашей компании организован Конструкторский отдел, призванный помогать разработчикам, и инженерам.

Конструкторский отдел помогает осуществить:

- *Регистрацию проекта у производителя компонентов.*
- *Техническую поддержку проекта.*
- *Защиту от снятия компонента с производства.*
- *Оценку стоимости проекта по компонентам.*
- *Изготовление тестовой платы монтаж и пусконаладочные работы.*

Тел: +7 (812) 336 43 04 (многоканальный)
Email: org@lifeelectronics.ru

www.lifeelectronics.ru