D-DF

D-Sub connectors - Screw-machined Contacts

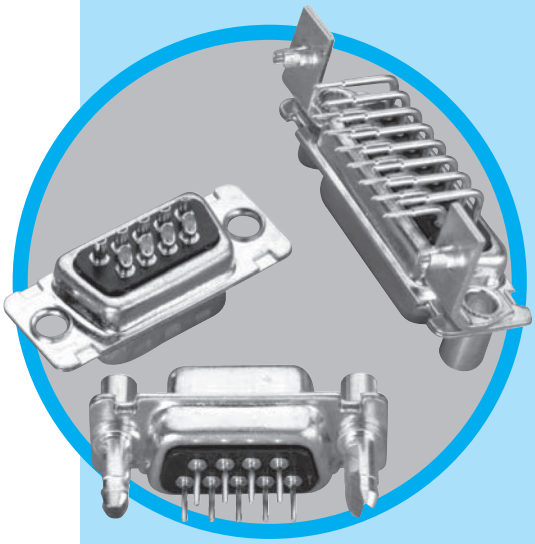

FIXED MACHINED CONTACT CONNECTOR

CHARACTERISTICS

Specifications

• Connectors according to MIL C24308 - NFC93425-HE5

Materials and Platings	
Shells	Steel tinned with dimples on plug connector
Insulator	Glass-filled thermoplastic, UL 94V-0
Rear insert	Brass, 3µm up to 5µm (118µ"up to 197µ") tinned over nickel 2µm up to 3µm (78µ" up to 118µ")
Boardlock	Tin plating 4µm up to 6µm (157µ" up to 236µ") over nickel 2µm up to 3µm (78µ" up to 118µ")
Screwlock	Brass, 6µm up to 10µm (236µ" up to 394µ") tinned over nickel 2µm up to 3µm (78µ" up to 118µ")
Contacts	**D:** brass **DF:** pin = brass socket = copper alloy **Right angle version:** full gold plating over 2µm to 3µm nickel **Straight version:** full gold plating over 2µm up to 3µm (78µ" up to 118µ") nickel

Electrical Data	
Current rating	7.5A
Voltage rating	300V AC/rms 50Hz
Withstanding voltage	1000V AC/rms 50Hz for one minute
Insulation resistance	5000MΩ
Contact resistance	**D:** 8.5mΩ max **DF:** 5mΩ max

Climatic Data	
Operating temperature	**D / DF:** -55°C to + 125°C
Salt spray	48 hours
Humidity	**D:** 21 days (40˚C - 95% HR) **DF:** 56 days (40˚C - 95% HR)

Mechanical Data

Mating and unmating force
Unit: kg (lb)

No. of Cts	Mate (max)	Unmate (min)
9 (size E)	3.05 (6.74)	0.36 (0.79)
15 (size A)	5.09 (11.24)	0.46 (1.01)
25 (size B)	8.44 (18.66)	0.81 (1.8)
37 (size C)	12.51 (27.65)	1.1 (2.47)
50 (size D)	14.65 (32.38)	1.6 (3.56)

DESCRIPTION

Amphenol's 17D and 17DF series fixed contact D-Subminiature connector is suitable for industrial or telecom use.

The machined contact provide stability and reliability.

This series offers the broadest range of termination options in the Amphenol line.

Connectors for industrial and telecom use

APPLICATIONS

- Medical
- Industrial
- Telecom
- Any industry standard I / O connections

D-DF / E18

Amphenol RoHS Compliant EU 2002/95/EC

Amphenol

Shell size dimensions

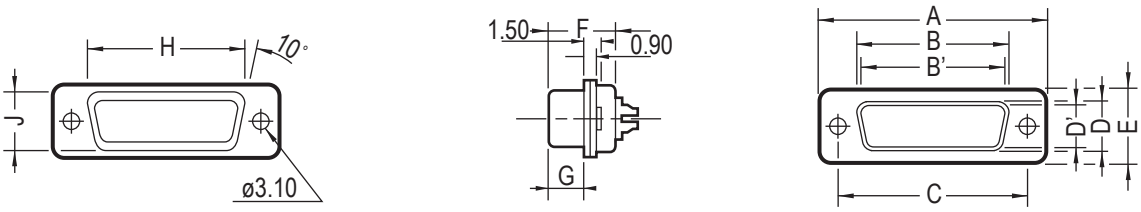

Shell size	Contact P: Pin S: Socket	A ±0.25 (±.010)	B 0/-0.20 (0/-.008)	B' +0.20/0 (+.008/0)	C ±0.10 (±.004)	D 0/-0.25 (0/-.010)	D' +0.25/0 (+.010/0)	E ±0.20 (±.008)	F +0.05/-0.20 (+.002/-.008)	F' +0.10/-0.20 (+.004/-.008)	G +0.10/-0.20 (+.004/-.008)	G' ±0.10 (±.004)	H +0.10/-0.40 (+.004/-.016)	J 0/-0.50 (0/-.020)
E	P	30.7 (1.209")		16.8 (.661")	25.0 (.984")		8.2 (.323")	12.4 (.488")		10.9 (.429")		5.9 (.232")	19.4 (.764")	11.0 (.433")
	S		16.4 (.646")			8.0 (.315")			11.1 (.437)		6.2 (.244")			
A	P	39.0 (1.535")		25.1 (.988")	33.3 (1.311")		8.2 (.323")	12.4 (.488")		10.9 (.429")		5.9 (.232")	27.7 (1.091")	11.0 (.433")
	S		24.8 (.976")			8.0 (.315")			11.1 (.437)		6.2 (.244")			
B	P	52.9 (2.083")		38.8 (1.528")	47.0 (1.850")		8.2 (.323")	12.4 (.488")		11.0 (.433")		5.8 (.228")	41.4 (1.630")	11.0 (.433")
	S		38.5 (1.513")			8.0 (.315")			11.1 (.437)		6.2 (.244")			
C	P	69.2 (2.724")		55.3 (2.177")	63.5 (2.500")		8.2 (.323")	12.4 (.488")		11.0 (.433")		5.8 (.228")	57.9 (2.280")	11.0 (.433")
	S		54.9 (2.161")			8.0 (.315")			11.1 (.437)		6.2 (.244")			
D	P	66.8 (2.630")		52.7 (2.075")	61.1 (2.406")		11.0 (.433")	15.2 (.598")		11.0 (.433")		5.8 (.228")	55.5 (2.185")	13.8 (.543")
	S		52.5 (2.067")			10.9 (.429")			11.1 (.437)		6.2 (.244")			

Panel cutouts

Optimal cutout for rear mounting

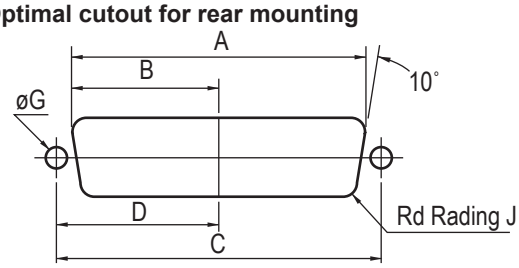

Standard cutout

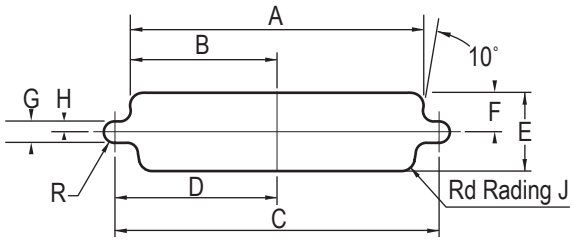

Shell size	Mounting method	A ±0.20 (±.008)	B ±0.20 (±.008)	C ±0.20 (±.008)	D ±0.20 (±.008)	E ±0.20 (±.008)	F ±0.20 (±.008)	G ±0.20 (±.008)	H ±0.20 (±.008)	J ±0.20 (±.008)
E	Front	22.2 (.874")	11.1 (.437")	25.0 (.984")	12.5 (.492")	13.0 (.512")	6.5 (.256")	3.0 (.118")	1.5 (.059")	2.1 (.083")
	Rear	20.5 (.807")	10.2 (.402")			11.4 (.449")	5.7 (.224")			3.4 (.0134")
A	Front	30.5 (1.201")	15.3 (.602")	33.3 (1.311")	16.7 (.657")	13.0 (.512")	6.5 (.256")	3.0 (.118")	1.5 (.059")	2.1 (.083")
	Rear	28.8 (1.134")	14.4 (.567")			11.4 (.449")	5.7 (.224")			3.4 (.0134")
B	Front	44.3 (1.744")	22.1 (.870")	47.0 (1.850")	23.5 (.925")	13.0 (.512")	6.5 (.256")	3.0 (.118")	1.5 (.059")	2.1 (.083")
	Rear	42.5 (1.673")	21.3 (.839")			11.4 (.449")	5.7 (.224")			3.4 (.0134")
C	Front	60.7 (2.390")	30.4 (1.197")	63.5 (2.500")	31.7 (1.248")	13.0 (.512")	6.5 (.256")	3.0 (.118")	1.5 (.059")	2.1 (.083")
	Rear	59.1 (2.327")	29.5 (1.161")			11.4 (.449")	5.7 (.224")			3.4 (.0134")
D	Front	58.3 (2.295")	29.2 (1.150")	61.1 (2.406")	30.6 (1.205")	15.8 (.622")	7.9 (.311")	3.0 (.118")	1.5 (.059")	2.1 (.083")
	Rear	56.3 (2.217")	28.2 (1.110")			14.1 (.555")	7.1 (.280")			3.4 (.0134")

Termination

Right angle

MIL Footprint

without bracket:

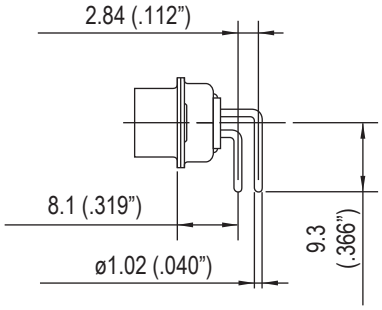

C

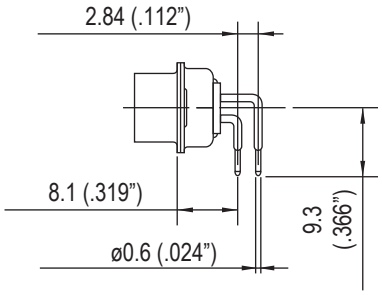

A4

plastic bracket:

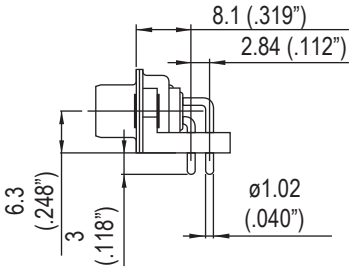

AJ3

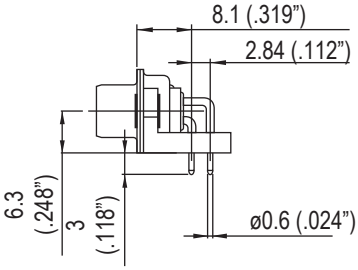

AJ4

metal bracket:

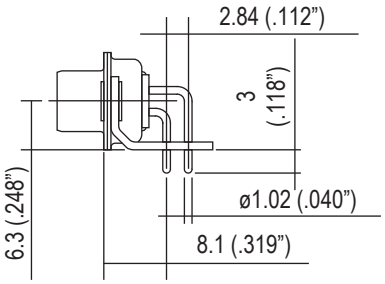

A

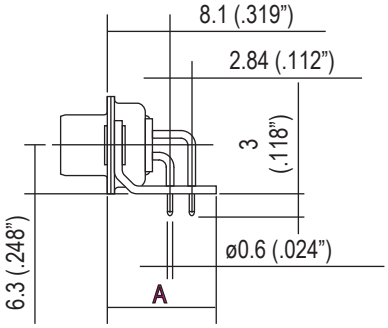

AM4: A=13.2mm
AZ4: A=11.5mm

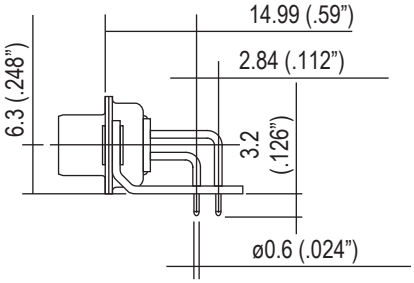

AM4B

50 contacts:

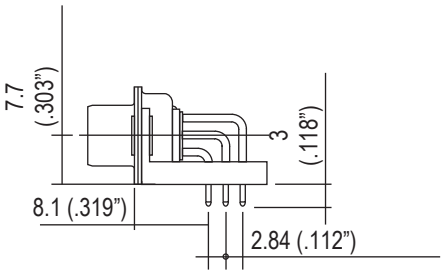

Termination

European footprint

without bracket:

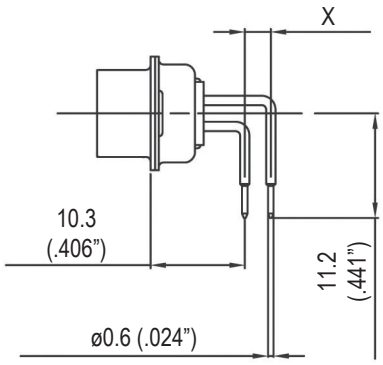

1AON: X=2.54mm
1BON: X=2.84mm

plastic bracket:

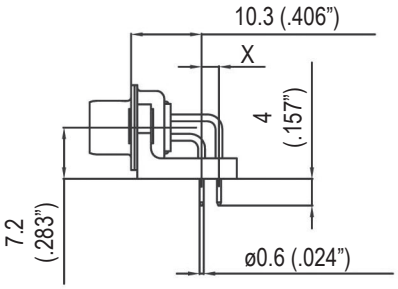

1APN: X=2.54mm
1BPN: X=2.84mm

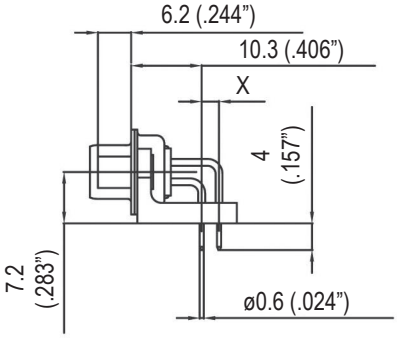

1AUN: X=2.54mm
1BUN: X=2.84mm

metal bracket:

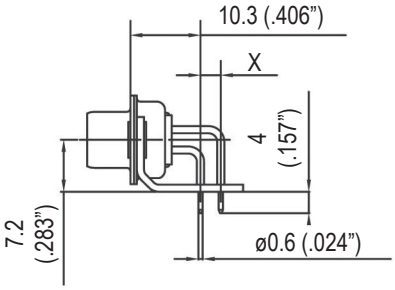

1AMN: X=2.54mm
1BMN: X=2.84mm

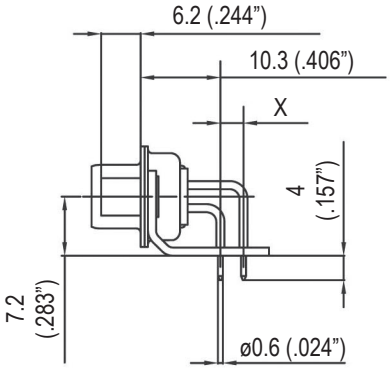

1ATN: X=2.54mm
1BTN: X=2.84mm

50 contacts:

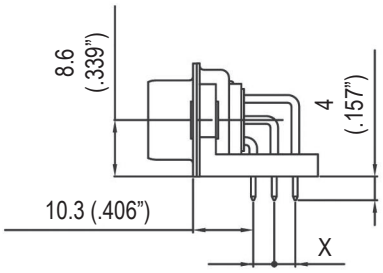

Termination

Solder Cup:

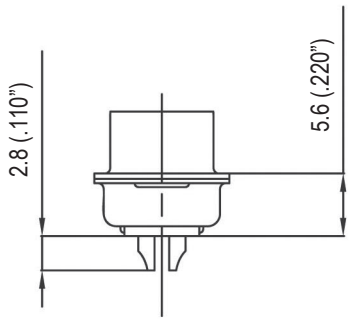

Wire Wrap:

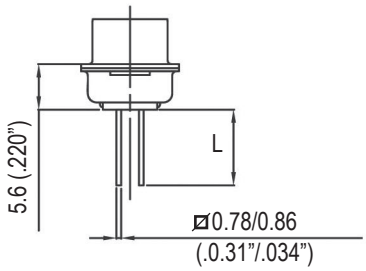

termination	Nb of wraps	L
F179	2	9.6mm (.378")
F179A	3	13mm (.512")

Straight PCB:

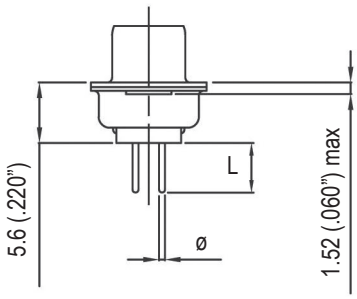

termination	Ø	L
U	0.6mm (.024")	3.2mm (.126")
V	1.02mm (.040")	2.4mm (.095")
T	0.6mm (.024")	4mm (.157")
OL2	0.6mm (.024")	5.5mm (.217")

Grounding tabs:

For straight termination

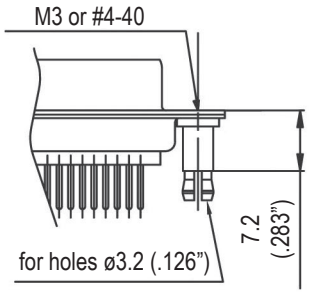

RM5

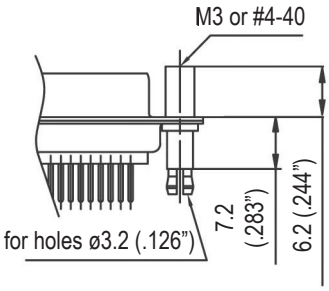

RM8

For R/A termination

FOR PCB 1.6

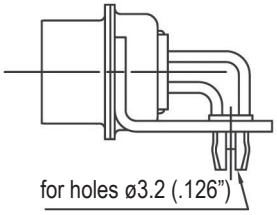

RM6

Panel mounting option

For straight and R/A termination

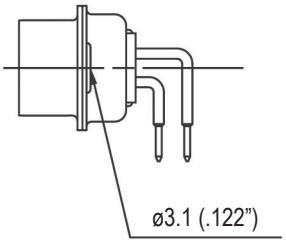

Standard rivet 3.1mm
no digit

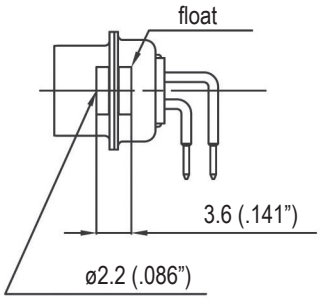

Float mounting
F

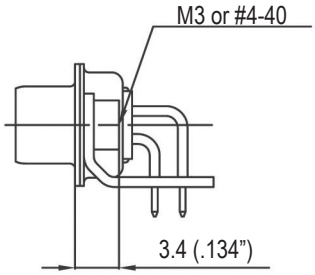

Threaded rear insert
H / G

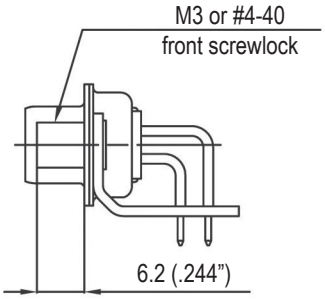

Fixed front female screwlock
VF / VFM

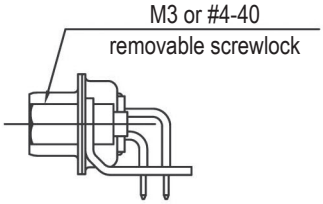

Removable female screwlock
VF2 / VFM2

Recommended PCB Layout

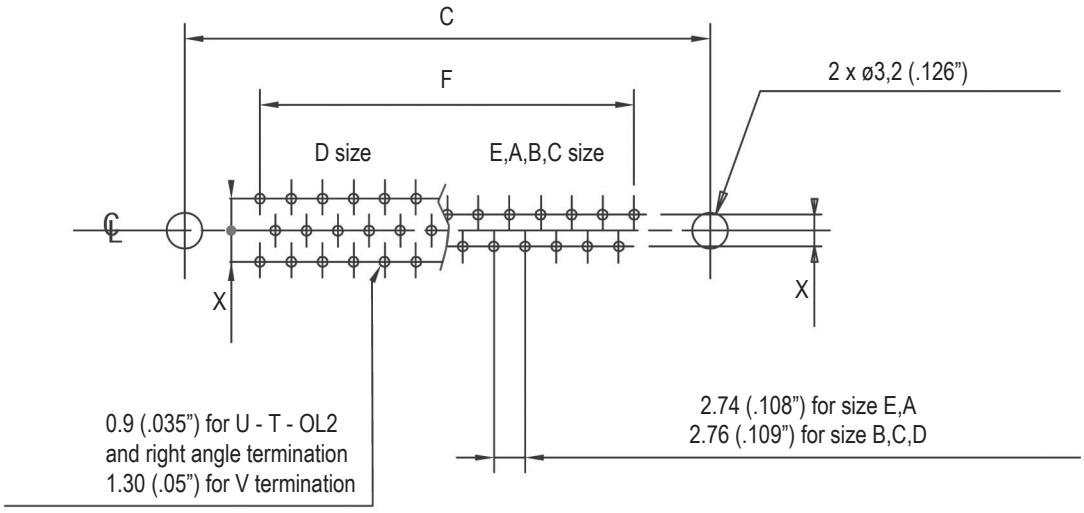

For straight PCB: X = 2.84mm (.112")

For right angle PCB: MIL: X = 2.84mm (.112")
European: X = 2.54mm (.100"), 2.84mm in option

	size E	size A	size B	size C	size D
C±0,1 (.004)	25 (.984)	33.3 (1.311)	47 (1.85)	63.5 (2.5)	61.1 (2.406)
F±0,05 (.002)	10.96 (.431)	19.18 (.755)	33.12 (1.304)	49.68 (1.956)	44.2 (1.74)

How to order

L ....

RoHS Compliant

for specific product

0.2µm (8µ")	**77D:** tinned shell for receptacle **717D:** tinned shell + dimples for plug
0.5µm (20µ")	**77DF or 177D:** tinned shell for receptacle **717DF or 777D:** tinned shell + dimples for plug
0.76µm (30µ")	**177DF :** tinned shell for receptacle **777DF :** tinned shell + dimples for plug

shell size: E,A,B,C, D

mounting options:
H = rear insert 4-40
G = rear insert M3
F = float mounting
no digit = standard rivet ø3.1mm
***H, G** must also be used to specify the threading of RM5 grounding tabs.

configuration: 09,15,25,37, 50

contact type:
P = pin
S = socket

grounding tabs:
RM5 = for straight PCB mounting*
RM8 = for straight PCB mounting + female lock
RM6 = for right angle PCB mounting
VF = front screwlock 4-40
VFM = front screwlock M3
VF2 = removable screwlock 4-40
VFM2 = removable screwlock M3

termination:
-solder cup: no digit

-wire wrap:
F179 = length 9.6mm
F179A = length 13mm

-straight PCB:
U = length 3.2mm, tail ø0.6mm
V = length 2.4mm, tail ø1.02mm
T = length 4mm, tail ø0.6mm
OL2 = length 5.5mm, tail ø0.6mm

-right angle connector:

MIL footprint

without bracket: **C** = tail ø1.02mm
A4 = tail ø0.6mm
plastic bracket: **AJ3** = tail ø1.02mm
AJ4 = tail ø0.6mm
metal bracket: **A** = tail ø1.02mm
AM4 = A = 13.2mm
AZ4 = A = 11.5mm
AM4B = footprint 14.99mm (.590")

European footprint

without bracket: **1AON** = X = 2.54mm
1BON = X = 2.84mm
plastic bracket: **1APN** = X = 2.54mm
1BPN = X = 2.84mm
1AUN = X = 2.54mm
1BUN = X = 2.84mm
metal bracket: **1AMN** = X = 2.54mm
1BMN = X = 2.84mm
1ATN = X = 2.54mm
1BTN = X = 2.84mm

: Standard options

For special request, please consult factory

NOTES

Memo

Do not hesitate to contact us for further information

Amphenol

Amphenol IT & Communication Products

Block A3/A4, The 4th Industrial District of
Industrial Headquarters, Dong Keng Road
Gong Ming Town, Shen Zhen China
Fax:+86(0)755 2754 9955

Technical Support

Tel:+86(0)755 2717 7945
Info-dsub@amphenol.com.cn
http://www.dsubconnector.com

The information given in this document are as a guideline only. We reserve the right to modify our products in any way we deem necessary. Any duplication is prohibited, unless approved in writing.

ООО «ЛайфЭлектроникс» “LifeElectronics” LLC

ИНН 7805602321 КПП 780501001 Р/С 40702810122510004610 ФАКБ "АБСОЛЮТ БАНК" (ЗАО) в г.Санкт-Петербурге К/С 30101810900000000703 БИК 044030703

Компания «Life Electronics» занимается поставками электронных компонентов импортного и отечественного производства от производителей и со складов крупных дистрибьюторов Европы, Америки и Азии.

С конца 2013 года компания активно расширяет линейку поставок компонентов по направлению коаксиальный кабель, кварцевые генераторы и конденсаторы (керамические, пленочные, электролитические), за счёт заключения дистрибьюторских договоров

Мы предлагаем:

- *Конкурентоспособные цены и скидки постоянным клиентам.*
- *Специальные условия для постоянных клиентов.*
- *Подбор аналогов.*
- *Поставку компонентов в любых объемах, удовлетворяющих вашим потребностям.*

- *Приемлемые сроки поставки, возможна ускоренная поставка.*
- *Доставку товара в любую точку России и стран СНГ.*
- *Комплексную поставку.*
- *Работу по проектам и поставку образцов.*
- *Формирование склада под заказчика.*

- *Сертификаты соответствия на поставляемую продукцию (по желанию клиента).*
- *Тестирование поставляемой продукции.*
- *Поставку компонентов, требующих военную и космическую приемку.*
- *Входной контроль качества.*
- *Наличие сертификата ISO.*

В составе нашей компании организован Конструкторский отдел, призванный помогать разработчикам, и инженерам.

Конструкторский отдел помогает осуществить:

- *Регистрацию проекта у производителя компонентов.*
- *Техническую поддержку проекта.*
- *Защиту от снятия компонента с производства.*
- *Оценку стоимости проекта по компонентам.*
- *Изготовление тестовой платы монтаж и пусконаладочные работы.*

Тел: +7 (812) 336 43 04 (многоканальный)
Email: org@lifeelectronics.ru

www.lifeelectronics.ru