5.0x7.0mm Surface Mount LVDS Clock Oscillator Series

CONNOR WINFIELD

2111 Comprehensive Drive
Aurora, Illinois 60505
Phone: 630-851-4722
Fax: 630-851-5040
www.conwin.com
US Headquarters:
630-851-4722
European Headquarters:
+353-61-472221

Description

The Connor Winfield Lxxx - Series is a 5x7.5mm Surface Mount, LVDS, Fixed Frequency Crystal Controlled Oscillator (XO) designed for applications requiring tight frequency stability, wide temperature range and low jitter. Operating at 2.5V or 3.3V supply voltage, the Lxxx - Series provides an LVDS Differential Outputs with enable / disable function. The surface mount package is designed for high-density mounting and is optimum for mass production.

Features:

Model Lxxx - Series
5.0 x7.0mm Surface Mount Package
2.5V or 3.3V Operation
LVDS Output Logic
Frequency Stabilities Available:
- L14x / L24x / L34x / L44x: +/-20ppm
- L11x / L21x / L31x / L41x: +/-25ppm
- L12x / L22x / L32x / L42x: +/-50ppm
- L13x / L23x / L33x / L43x: +/-100ppm

Temperature Ranges Available:
- L1xx Series: 0 to 70°C
- L2xx Series: -40 to 85°C
- L3xx Series: 0 to 85°C
- L4xx Series: -20 to 70°C

Low Jitter <1pS RMS
Tri-State Enable/Disable on Pad 1 or 2
Tape and Reel Packaging
RoHS Compliant / Lead Free ✓RoHS

Model Specifications

Absolute Maximum Ratings

Table 1.0

Parameter	Units	Minimum	Nominal	Maximum	Units	Note
Storage Temperature		-55	-	125	°C	
Supply Voltage	(Vcc)	-0.5	-	4.6	Vdc	
Input Voltage		-0.5	-	Vcc+0.5	Vdc	

Operating Specifications

Table 2.0

Parameter		Minimum	Nominal	Maximum	Units	Note
Center Frequency	(Fo)	20	-	260	MHz	
Total Frequency Tolerance		(See Table 9 for full part number)				
Model Lx4x (See Table 9)		-20	-	20	ppm	1
Model Lx1x (See Table 9)		-25	-	25	ppm	1
Model Lx2x (See Table 9)		-50	-	50	ppm	1
Model Lx3x (See Table 9)		-100	-	100	ppm	1
Operating Temperature Range						
Model L1xx (See Table 9)		0	-	70	°C	
Model L3xx (See Table 9)		0	-	85	°C	
Model L2xx (See Table 9)		-40	-	85	°C	
Model L4xx (See Table 9)		-20	-	70	°C	
Supply Voltage	(Vcc)					
Model Lxx2 E/D Pad 1 (See Table 9)		2.375	2.500	2.625	Vdc	
Model Lxx3 E/D Pad 1 (See Table 9)		3.135	3.3	3.465	Vdc	
Model Lxx4 E/D Pad 2 (See Table 9)		2.375	2.500	2.625	Vdc	
Model Lxx5 E/D Pad 2 (See Table 9)		3.135	3.3	3.465	Vdc	
Supply Current	(Icc)	-	45	65	mA	
Period Jitter		-	3	5	ps RMS	
Phase Jitter (BW=12kHz to 20MHz)		-	0.5	1	ps RMS	
SSB Phase Noise at 10Hz offset		-	-60	-	dBc/Hz	
SSB Phase Noise at 100Hz offset		-	-90	-	dBc/Hz	
SSB Phase Noise at 1KHz offset		-	-125	-	dBc/Hz	
SSB Phase Noise at 10KHz offset		-	-140	-	dBc/Hz	
SSB Phase Noise at 100KHz offset		-	-145	-	dBc/Hz	

Input Characteristics

Table 3.0

Parameter		Minimum	Nominal	Maximum	Units	Note
Disable Input Voltage (Low)	(Vil)	-	-	0.3Vcc	Vdc	2
Enable Input Voltage (High)	(Vih)	0.7Vcc	-	-	Vdc	2
Enable Time		-	-	500	us	
Disable Time		-	-	200	ns	
Standby Current (when part is Disabled)	(Icc)	-	-	30	uA	

LVDS Output Characteristics

Table 4.0

Parameter		Minimum	Nominal	Maximum	Units	Note
LOAD		-	-	100	Ohms	
Output Differential Voltage	(Vod)	250	-	450	mV	3
Output Swing (Differential Output peak to peak)	(Vopp)	500	700	900	mV	
Duty Cycle measured at 50%		45	50	55	%	4
Differential Rise / Fall Time 20% to 80%		-	0.3	0.7	ns	

Package Characteristics

Table 5.0

Package	Hermetically sealed ceramic package and metal cover.
Soldering Process	RoHS compliant, lead free, see solder profile on page 2.

RoHS COMPLIANT

Bulletin	DS021
Page	1 of 2
Revision	04
Date	27 Oct 2008

Specifications subject to change without notice. All dimensions in inches. © Copyright 2007 The Connor-Winfield Corporation

2111 Comprehensive Drive
Aurora, Illinois 60505
Phone: 630-851-4722
Fax: 630-851-5040
www.conwin.com

CONNOR WINFIELD

Notes

1) Includes initial tolerance, deviation over temperature, supply and load variations, shock, vibration and 20 years aging.
2) When the oscillator is disabled, the outputs are at High Impedance. Output is enabled with no connection on E/D pad.
3) Vod measured with 100 ohm resistor between the true output and the complementary output.
4) Duty Cycle measured at 50% of output swing.

Ordering Information

L	1	4	3	-	155.52M
Type: LVDS Clock Series 5x7mm	Temperature Range: 1 = 0 to 70° C, 2 = -40 to 85° C, 3 = 0 to 85° C, 4 = -20 to 70° C	Frequency Stability: 4 = +/-20 ppm, 1 = +/-25 ppm, 2 = +/-50 ppm, 3 = +/-100 ppm	Supply Voltage: 2 = 2.5Vdc, E/D Pad 1, 3 = 3.3Vdc, E/D Pad 1, 4 = 2.5Vdc, E/D Pad 2, 5 = 3.3Vdc, E/D Pad 2		Output Frequency: Frequency Format -xxx.xM Min.* -xxx.xxxxxxM Max.* *Amount of numbers after the decimal point. M = MHz

Example:
L143-155.52M = LVDS Output,
0 to 70, +/-20ppm, 3.3Vdc, E/D Pad 1, Output Frequency 155.52MHz

To order an L143 with an output frequency of:
25 MHz = L143-025.0M
44.736 MHz = L143-044.736M
155.52 MHz = L143-155.52M

Environmental Characteristics

Table 6

Vibration:	Vibration per Mil Std 883E Method 2007.3 Test Condition A
Shock:	Mechanical Shock per Mil Std 883E Method 2002.4 Test Condition B.
Soldering:	SMD product suitable for Convection Reflow soldering. Peak temperature 260 C. Maximum time above 220 C, 60 seconds.
Solderability	Solderability per Mil Std 883E Method 2003

Pad Connections - Enable / Disable Function

Table 7.0

Pad	Connection
1	Enable / Disable (Lxx2 or Lxx3 Models)
2	Enable / Disable (Lxx4 or Lxx5 Models)
3	Ground
4	Q Output
5	$\overline{Q}$ Output
6	Vcc

Table 8.0

Enable / Disable Function (Pad 1 or 2)	Output
High or Open	Enable
Low	Disable (High Impedance)

Model Matrix

Table 9.0

Frequency Tolerance ±20ppm	Frequency Tolerance ±25ppm	Frequency Tolerance ±50ppm	Frequency Tolerance ±100ppm	Supply Voltage	Temperature Range	Enable / Disable Function Pad
L142	L112	L122	L132	2.5Vdc	0 to 70°C	1
L342	L312	L322	L332	2.5Vdc	0 to 85°C	1
L242	L212	L222	L232	2.5Vdc	-40 to 85°C	1
L442	L412	L422	L432	2.5Vdc	-20 to 70°C	1
L143	L113	L123	L133	3.3Vdc	0 to 70°C	1
L343	L313	L323	L333	3.3Vdc	0 to 85°C	1
L243	L213	L223	L233	3.3Vdc	-40 to 85°C	1
L443	L413	L423	L433	3.3Vdc	-20 to 70°C	1
L145	L115	L125	L135	2.5Vdc	0 to 70°C	2
L345	L315	L325	L335	2.5Vdc	0 to 85°C	2
L245	L215	L225	L235	2.5Vdc	-40 to 85°C	2
L445	L415	L425	L435	2.5Vdc	-20 to 70°C	2
L144	L114	L124	L134	3.3Vdc	0 to 70°C	2
L344	L314	L324	L334	3.3Vdc	0 to 85°C	2
L244	L214	L224	L234	3.3Vdc	-40 to 85°C	2
L444	L414	L424	L434	3.3Vdc	-20 to 70°C	2

Tape and Reel Specifications

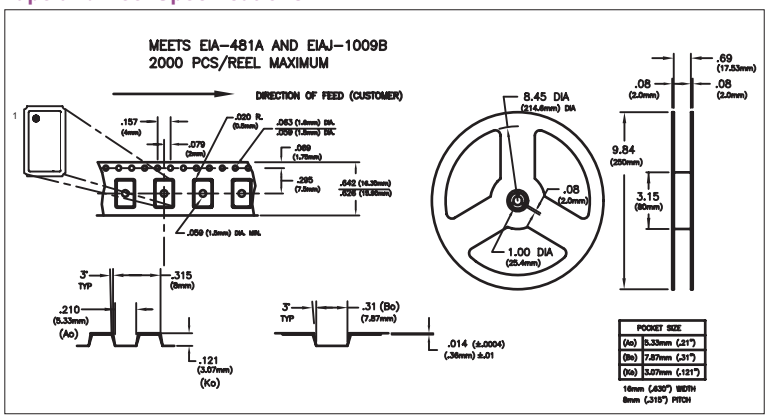

Package Outline

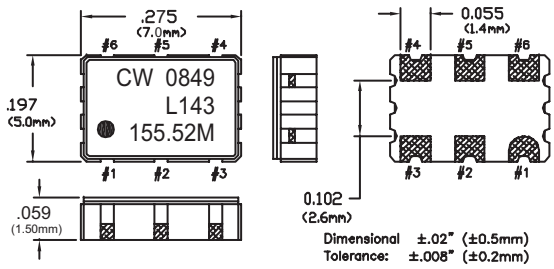

Suggested Pad Layout

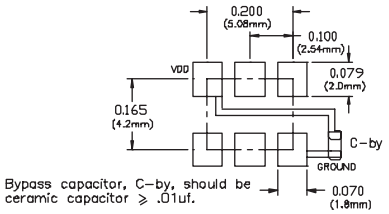

LVDS Output Waveform

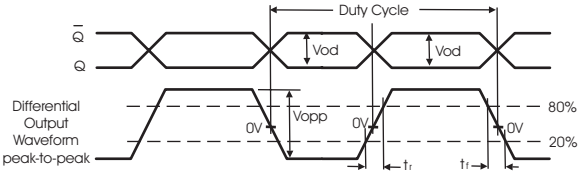

Test Circuit

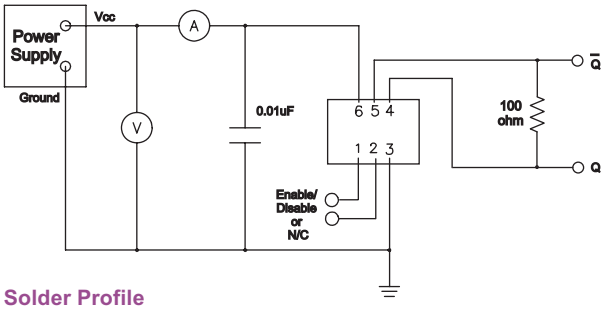

Solder Profile

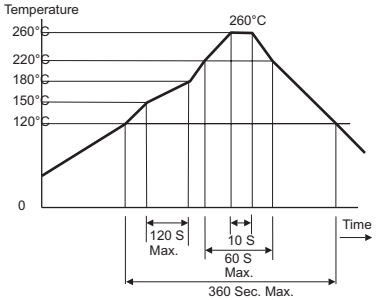

US Headquarters:
630-851-4722
European Headquarters:
+353-61-472221

Specifications subject to change without notice. All dimensions in inches. © Copyright 2008 The Connor-Winfield Corporation

ООО «ЛайфЭлектроникс» “LifeElectronics” LLC

ИНН 7805602321 КПП 780501001 Р/С 40702810122510004610 ФАКБ "АБСОЛЮТ БАНК" (ЗАО) в г.Санкт-Петербурге К/С 30101810900000000703 БИК 044030703

Компания «Life Electronics» занимается поставками электронных компонентов импортного и отечественного производства от производителей и со складов крупных дистрибьюторов Европы, Америки и Азии.

С конца 2013 года компания активно расширяет линейку поставок компонентов по направлению коаксиальный кабель, кварцевые генераторы и конденсаторы (керамические, пленочные, электролитические), за счёт заключения дистрибьюторских договоров

Мы предлагаем:

- *Конкурентоспособные цены и скидки постоянным клиентам.*
- *Специальные условия для постоянных клиентов.*
- *Подбор аналогов.*
- *Поставку компонентов в любых объемах, удовлетворяющих вашим потребностям.*

- *Приемлемые сроки поставки, возможна ускоренная поставка.*
- *Доставку товара в любую точку России и стран СНГ.*
- *Комплексную поставку.*
- *Работу по проектам и поставку образцов.*
- *Формирование склада под заказчика.*

- *Сертификаты соответствия на поставляемую продукцию (по желанию клиента).*
- *Тестирование поставляемой продукции.*
- *Поставку компонентов, требующих военную и космическую приемку.*
- *Входной контроль качества.*
- *Наличие сертификата ISO.*

В составе нашей компании организован Конструкторский отдел, призванный помогать разработчикам, и инженерам.

Конструкторский отдел помогает осуществить:

- *Регистрацию проекта у производителя компонентов.*
- *Техническую поддержку проекта.*
- *Защиту от снятия компонента с производства.*
- *Оценку стоимости проекта по компонентам.*
- *Изготовление тестовой платы монтаж и пусконаладочные работы.*

Тел: +7 (812) 336 43 04 (многоканальный)
Email: org@lifeelectronics.ru

www.lifeelectronics.ru