BAS70 series; 1PS7xSB70 series

General-purpose Schottky diodes

Rev. 09 — 13 January 2010 Product data sheet

1. Product profile

1.1 General description

General-purpose Schottky diodes in small Surface-Mounted Device (SMD) plastic packages.

Table 1. Product overview

Type number	Package		Configuration
	Nexperia	JEITA	
1PS76SB70	SOD323	SC-76	single diode
1PS79SB70	SOD523	SC-79	single diode
BAS70	SOT23	-	single diode
BAS70H	SOD123F	-	single diode
BAS70L	SOD882	-	single diode
BAS70W	SOT323	SC-70	single diode
BAS70-04	SOT23	-	dual series
BAS70-04W	SOT323	SC-70	dual series
BAS70-05	SOT23	-	dual common cathode
BAS70-05W	SOT323	SC-70	dual common cathode
BAS70-06	SOT23	-	dual common anode
BAS70-06W	SOT323	SC-70	dual common anode
BAS70-07	SOT143B	-	dual isolated
BAS70-07S	SOT363	SC-88	dual isolated
BAS70-07V	SOT666	-	dual isolated
BAS70VV	SOT666	-	triple isolated
BAS70XY	SOT363	SC-88	quadruple; 2 series

1.2 Features

- High switching speed
- High breakdown voltage
- Low leakage current
- Low capacitance

1.3 Applications

- Ultra high-speed switching
- Voltage clamping

1.4 Quick reference data

Table 2. Quick reference data

Symbol	Parameter	Conditions		Min	Typ	Max	Unit
Per diode							
I_F	forward current			-	-	70	mA
V_F	forward voltage	I_F = 1 mA	[1]	-	-	410	mV
V_R	reverse voltage			-	-	70	V

[1] Pulse test: $t_p \leq 300$ µs; $\delta \leq 0.02$.

2. Pinning information

Table 3. Pinning

Pin	Description		Simplified outline	Symbol
BAS70H; 1PS76SB70; 1PS79SB70				
1	cathode	[1]	001aab540	sym001
2	anode			
BAS70L				
1	cathode	[1]	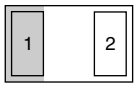 Transparent top view	sym001
2	anode			
BAS70; BAS70W				
1	anode		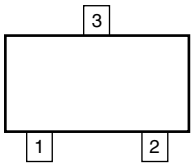 006aaa144	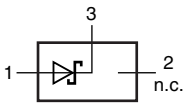 006aaa436
2	not connected			
3	cathode			
BAS70-04; BAS70-04W				
1	anode (diode 1)		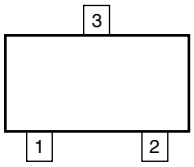 006aaa144	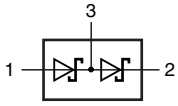 006aaa437
2	cathode (diode 2)			
3	cathode (diode 1), anode (diode 2)			

© Nexperia B.V. 2017. All rights reserved

Table 3. Pinning *...continued*

Pin	Description	Simplified outline	Symbol
BAS70-05; BAS70-05W			
1	anode (diode 1)	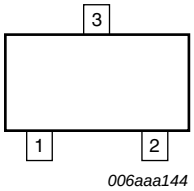	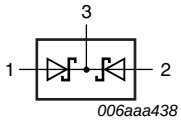
2	anode (diode 2)		
3	cathode (diode 1), cathode (diode 2)		
BAS70-06; BAS70-06W			
1	cathode (diode 1)	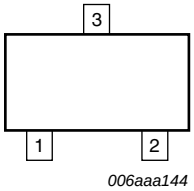	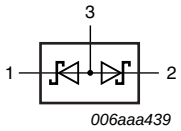
2	cathode (diode 2)		
3	anode (diode 1), anode (diode 2)		
BAS70-07			
1	cathode (diode 1)	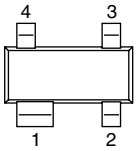	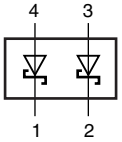
2	cathode (diode 2)		
3	anode (diode 2)		
4	anode (diode 1)		
BAS70-07S; BAS70-07V			
1	anode (diode 1)	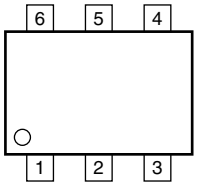	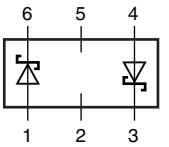
2	not connected		
3	cathode (diode 2)		
4	anode (diode 2)		
5	not connected		
6	cathode (diode 1)		
BAS70VV			
1	anode (diode 1)	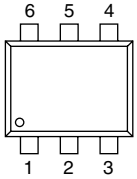	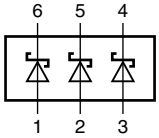
2	anode (diode 2)		
3	anode (diode 3)		
4	cathode (diode 3)		
5	cathode (diode 2)		
6	cathode (diode 1)		

© Nexperia B.V. 2017. All rights reserved

Table 3. Pinning *...continued*

Pin	Description	Simplified outline	Symbol
BAS70XY			
1	anode (diode 1)	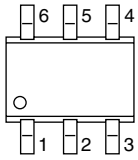	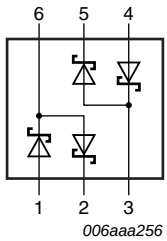
2	cathode (diode 2)		
3	anode (diode 3), cathode (diode 4)		
4	anode (diode 4)		
5	cathode (diode 3)		
6	cathode (diode 1), anode (diode 2)		

[1] The marking bar indicates the cathode.

3. Ordering information

Table 4. Ordering information

Type number	Package		
	Name	Description	Version
1PS76SB70	SC-76	plastic surface-mounted package; 2 leads	SOD323
1PS79SB70	SC-79	plastic surface-mounted package; 2 leads	SOD523
BAS70	-	plastic surface-mounted package; 3 leads	SOT23
BAS70H	-	plastic surface-mounted package; 2 leads	SOD123F
BAS70L	-	leadless ultra small plastic package; 2 terminals; body 1.0 × 0.6 × 0.5 mm	SOD882
BAS70W	SC-70	plastic surface-mounted package; 3 leads	SOT323
BAS70-04	-	plastic surface-mounted package; 3 leads	SOT23
BAS70-04W	SC-70	plastic surface-mounted package; 3 leads	SOT323
BAS70-05	-	plastic surface-mounted package; 3 leads	SOT23
BAS70-05W	SC-70	plastic surface-mounted package; 3 leads	SOT323
BAS70-06	-	plastic surface-mounted package; 3 leads	SOT23
BAS70-06W	SC-70	plastic surface-mounted package; 3 leads	SOT323
BAS70-07	-	plastic surface-mounted package; 4 leads	SOT143B
BAS70-07S	SC-88	plastic surface-mounted package; 6 leads	SOT363
BAS70-07V	-	plastic surface-mounted package; 6 leads	SOT666
BAS70VV	-	plastic surface-mounted package; 6 leads	SOT666
BAS70XY	SC-88	plastic surface-mounted package; 6 leads	SOT363

© Nexperia B.V. 2017. All rights reserved

4. Marking

Table 5. Marking codes

Type number	Marking code[1]	Type number	Marking code[1]
1PS76SB70	S2	BAS70-05W	75*
1PS79SB70	G	BAS70-06	76*
BAS70	73*	BAS70-06W	76*
BAS70H	AH	BAS70-07	77*
BAS70L	S8	BAS70-07S	77*
BAS70W	73*	BAS70-07V	77
BAS70-04	74*	BAS70VV	N1
BAS70-04W	74*	BAS70XY	70*
BAS70-05	75*	-	-

[1] * = -: made in Hong Kong
* = p: made in Hong Kong
* = t: made in Malaysia
* = W: made in China

5. Limiting values

Table 6. Limiting values

In accordance with the Absolute Maximum Rating System (IEC 60134).

Symbol	Parameter	Conditions		Min	Max	Unit
Per diode						
V_R	reverse voltage			-	70	V
I_F	forward current			-	70	mA
I_{FRM}	repetitive peak forward current	$t_p \leq 1$ s; $\delta \leq 0.5$		-	70	mA
I_{FSM}	non-repetitive peak forward current	$t_p \leq 10$ ms	[1]	-	100	mA
T_j	junction temperature			-	150	°C
T_{amb}	ambient temperature			−65	+150	°C
T_{stg}	storage temperature			−65	+150	°C

[1] T_j = 25 °C prior to surge.

© Nexperia B.V. 2017. All rights reserved

6. Thermal characteristics

Table 7. Thermal characteristics

Symbol	Parameter	Conditions		Min	Typ	Max	Unit
Per device							
$R_{th(j-a)}$	thermal resistance from junction to ambient	in free air	[1]				
	SOT23			-	-	500	K/W
	SOT143B			-	-	500	K/W
	SOT363 (BAS70-07S)			-	-	416	K/W
	SOT666 (BAS70VV)		[2]	-	-	700	K/W
	SOT666 (BAS70-07V)		[2]	-	-	416	K/W
	SOD123F		[2]	-	-	330	K/W
	SOD323			-	-	450	K/W
	SOD523		[2]	-	-	450	K/W
	SOD882		[2]	-	-	500	K/W
	SOT323			-	-	625	K/W
$R_{th(j-sp)}$	thermal resistance from junction to solder point						
	SOT363 (BAS70XY)		[3]	-	-	260	K/W

[1] Device mounted on an FR4 Printed-Circuit Board (PCB), single-sided copper, tin-plated and standard footprint.

[2] Reflow soldering is the only recommended soldering method.

[3] Soldering point at pins 2, 3, 5 and 6.

7. Characteristics

Table 8. Characteristics

T_{amb} = 25 °C unless otherwise specified.

Symbol	Parameter	Conditions		Min	Typ	Max	Unit
Per diode							
V_F	forward voltage		[1]				
		I_F = 1 mA		-	-	410	mV
		I_F = 10 mA		-	-	750	mV
		I_F = 15 mA		-	-	1	V
I_R	reverse current	V_R = 50 V		-	-	100	nA
		V_R = 70 V		-	-	10	μA
C_d	diode capacitance	V_R = 0 V; f = 1 MHz		-	-	2	pF

[1] Pulse test: $t_p \leq 300$ μs; $\delta \leq 0.02$.

© Nexperia B.V. 2017. All rights reserved

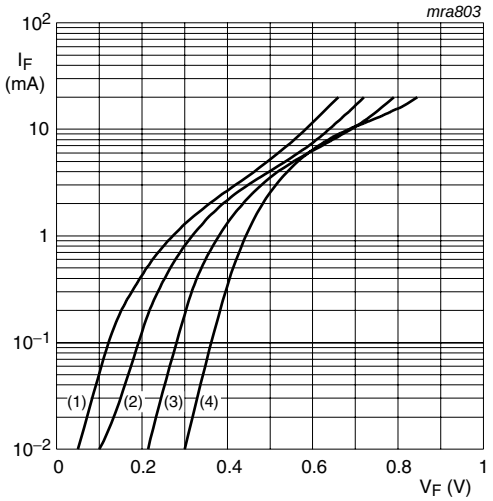

(1) T_{amb} = 125 °C

(2) T_{amb} = 85 °C

(3) T_{amb} = 25 °C

(4) T_{amb} = −40 °C

Fig 1. Forward current as a function of forward voltage; typical values

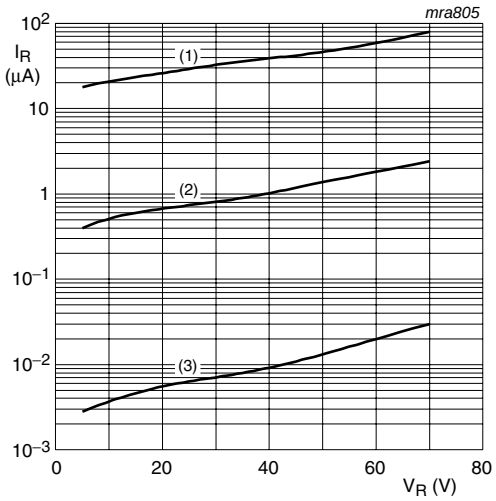

(1) T_{amb} = 125 °C

(2) T_{amb} = 85 °C

(3) T_{amb} = 25 °C

Fig 2. Reverse current as a function of reverse voltage; typical values

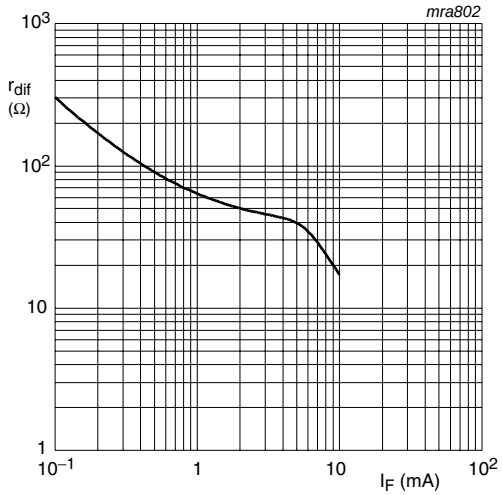

f = 10 kHz

Fig 3. Differential forward resistance as a function of forward current; typical values

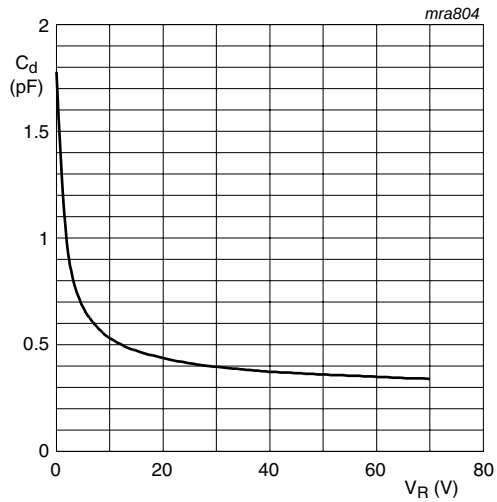

T_{amb} = 25 °C; f = 1 MHz

Fig 4. Diode capacitance as a function of reverse voltage; typical values

© Nexperia B.V. 2017. All rights reserved

8. Package outline

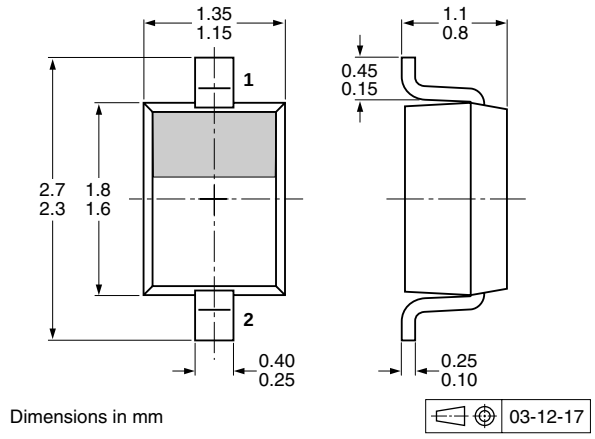

Fig 5. Package outline SOD323 (SC-76)

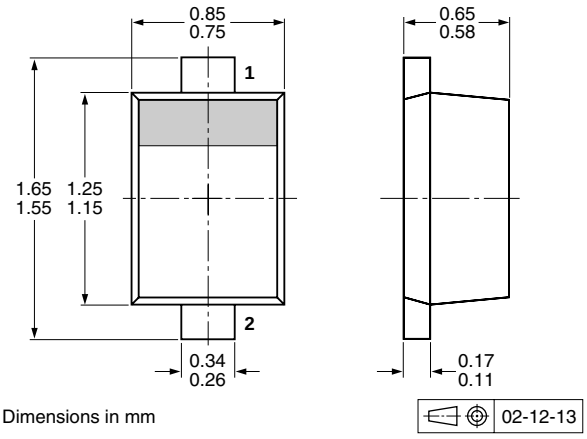

Fig 6. Package outline SOD523 (SC-79)

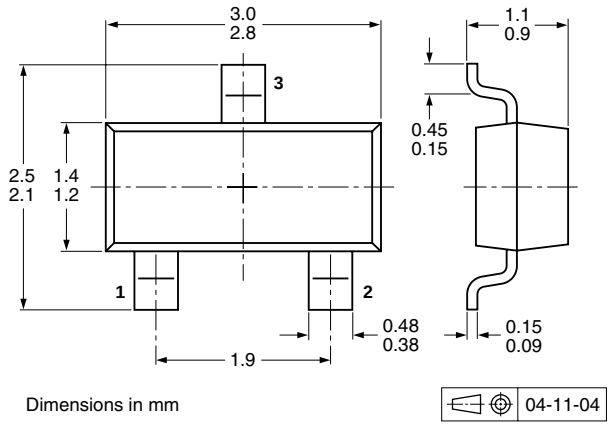

Fig 7. Package outline SOT23 (TO-236AB)

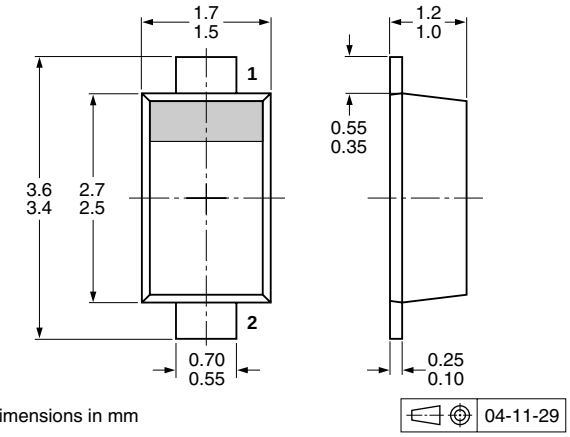

Fig 8. Package outline SOD123F

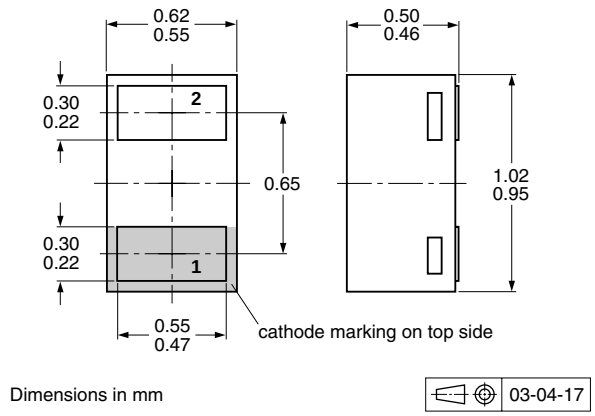

Fig 9. Package outline SOD882

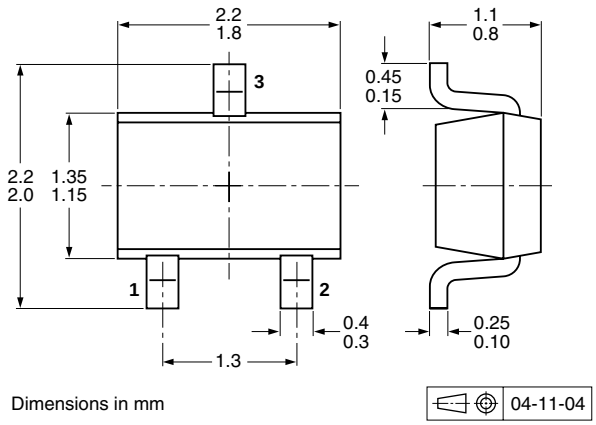

Fig 10. Package outline SOT323 (SC-70)

© Nexperia B.V. 2017. All rights reserved

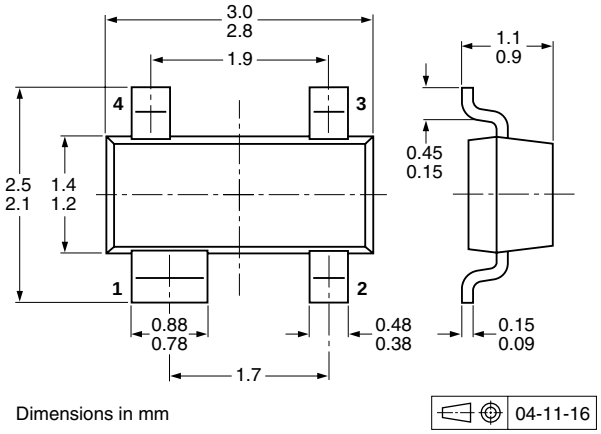

Fig 11. Package outline SOT143B

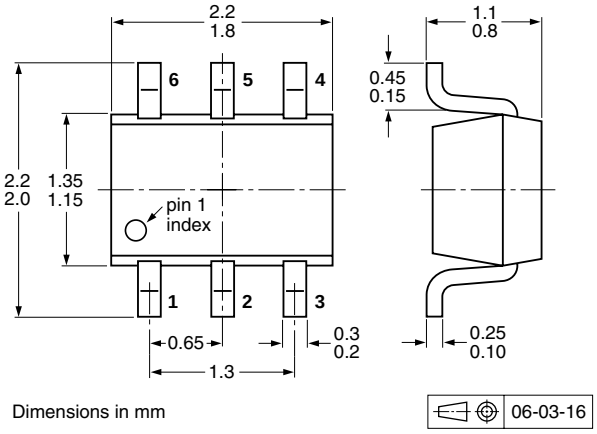

Fig 12. Package outline SOT363 (SC-88)

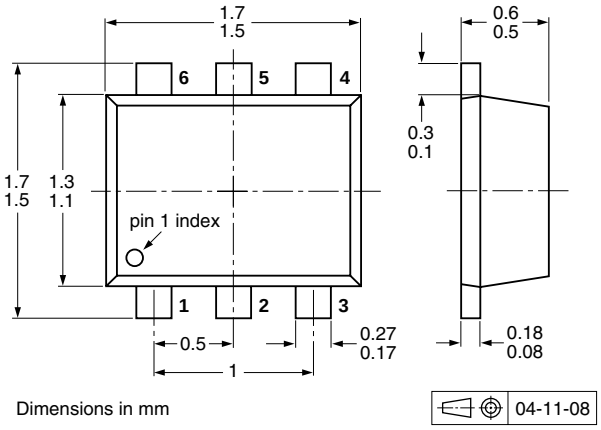

Fig 13. Package outline SOT666

© Nexperia B.V. 2017. All rights reserved

9. Packing information

Table 9. Packing methods

The indicated -xxx are the last three digits of the 12NC ordering code.[1]

Type number	Package	Description	Packing quantity			
			3000	4000	8000	10000
1PS76SB70	SOD323	4 mm pitch, 8 mm tape and reel	-115	-	-	-135
1PS79SB70	SOD523	2 mm pitch, 8 mm tape and reel	-	-	-315	-
		4 mm pitch, 8 mm tape and reel	-115	-	-	-135
BAS70	SOT23	4 mm pitch, 8 mm tape and reel	-215	-	-	-235
BAS70H	SOD123F	4 mm pitch, 8 mm tape and reel	-115	-	-	-135
BAS70L	SOD882	2 mm pitch, 8 mm tape and reel	-	-	-	-315
BAS70W	SOT323	4 mm pitch, 8 mm tape and reel	-115	-	-	-135
BAS70-04	SOT23	4 mm pitch, 8 mm tape and reel	-215	-	-	-235
BAS70-04W	SOT323	4 mm pitch, 8 mm tape and reel	-115	-	-	-135
BAS70-05	SOT23	4 mm pitch, 8 mm tape and reel	-215	-	-	-235
BAS70-05W	SOT323	4 mm pitch, 8 mm tape and reel	-115	-	-	-135
BAS70-06	SOT23	4 mm pitch, 8 mm tape and reel	-215	-	-	-235
BAS70-06W	SOT323	4 mm pitch, 8 mm tape and reel	-115	-	-	-135
BAS70-07	SOT143B	4 mm pitch, 8 mm tape and reel	-215	-	-	-235
BAS70-07S	SOT363	4 mm pitch, 8 mm tape and reel; T1 [2]	-115	-	-	-135
		4 mm pitch, 8 mm tape and reel; T2 [3]	-125	-	-	-165
BAS70-07V	SOT666	2 mm pitch, 8 mm tape and reel	-	-	-315	-
		4 mm pitch, 8 mm tape and reel	-	-115	-	-
BAS70VV	SOT666	2 mm pitch, 8 mm tape and reel	-	-	-315	-
		4 mm pitch, 8 mm tape and reel	-	-115	-	-
BAS70XY	SOT363	4 mm pitch, 8 mm tape and reel; T1 [2]	-115	-	-	-135
		4 mm pitch, 8 mm tape and reel; T2 [3]	-125	-	-	-165

[1] For further information and the availability of packing methods, see Section 13.

[2] T1: normal taping

[3] T2: reverse taping

© Nexperia B.V. 2017. All rights reserved

10. Soldering

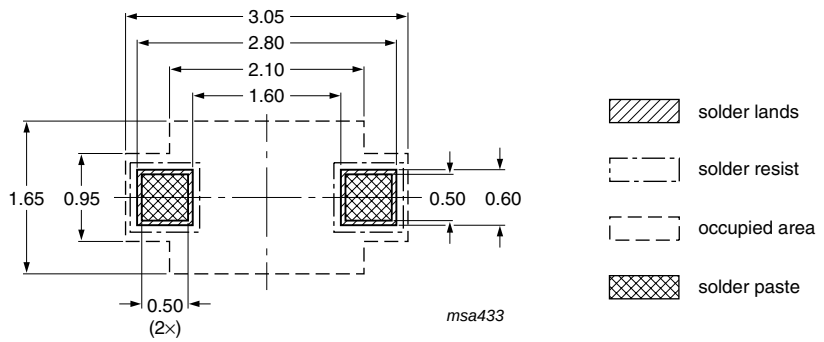

Dimensions in mm

Fig 14. Reflow soldering footprint SOD323 (SC-76)

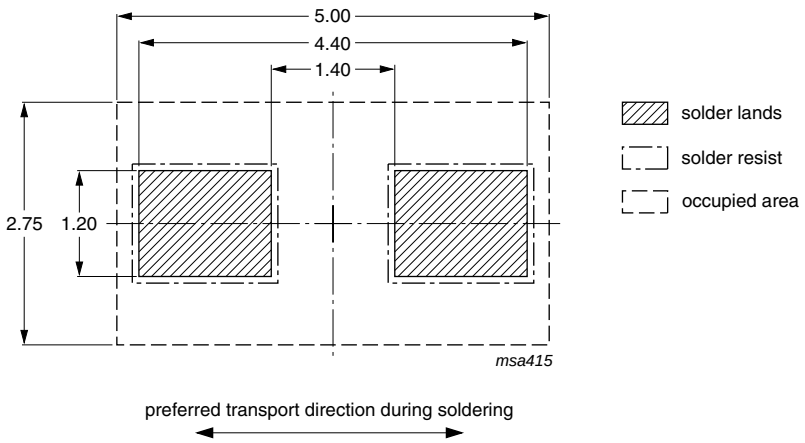

Dimensions in mm

Fig 15. Wave soldering footprint SOD323 (SC-76)

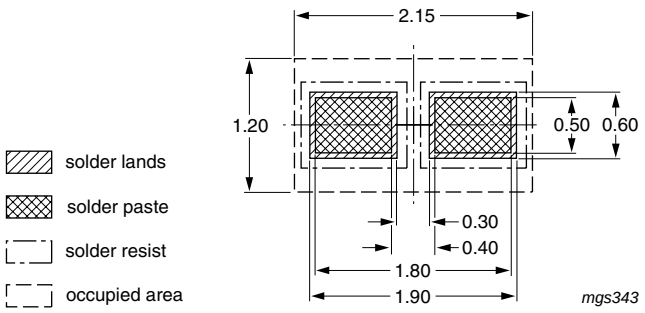

Reflow soldering is the only recommended soldering method.

Dimensions in mm

Fig 16. Reflow soldering footprint SOD523 (SC-79)

© Nexperia B.V. 2017. All rights reserved

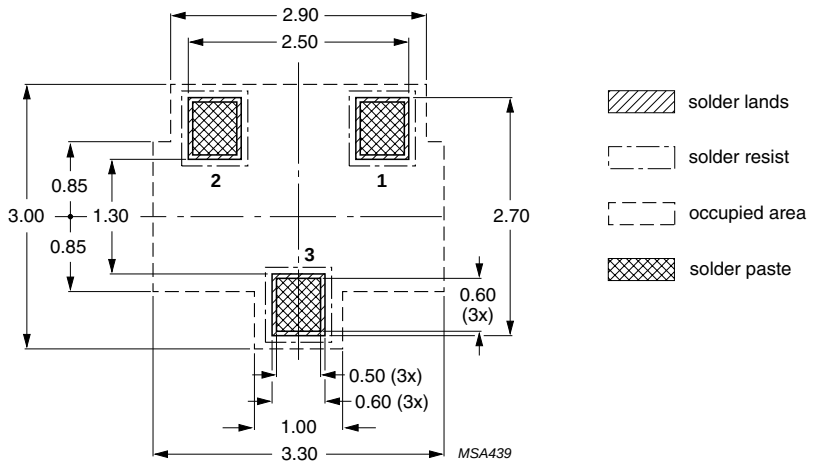

Dimensions in mm

Fig 17. Reflow soldering footprint SOT23 (TO-236AB)

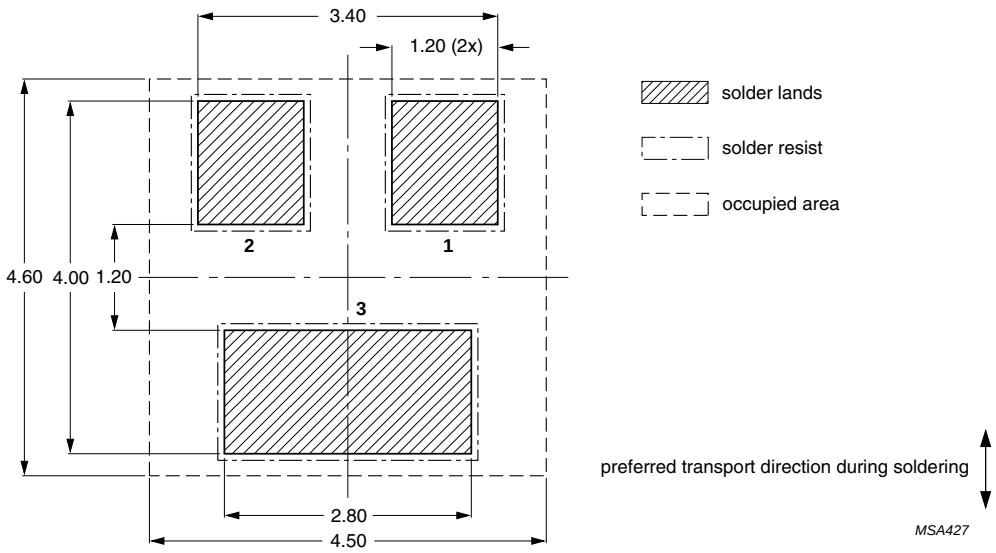

Dimensions in mm

Fig 18. Wave soldering footprint SOT23 (TO-236AB)

© Nexperia B.V. 2017. All rights reserved

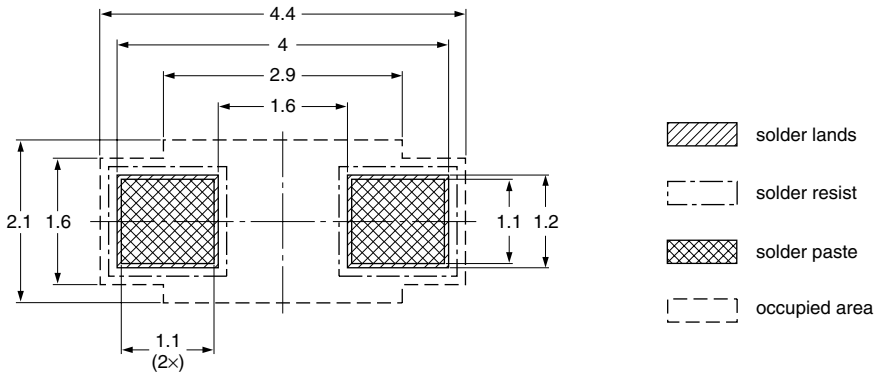

Reflow soldering is the only recommended soldering method.

Dimensions in mm

Fig 19. Reflow soldering footprint SOD123F

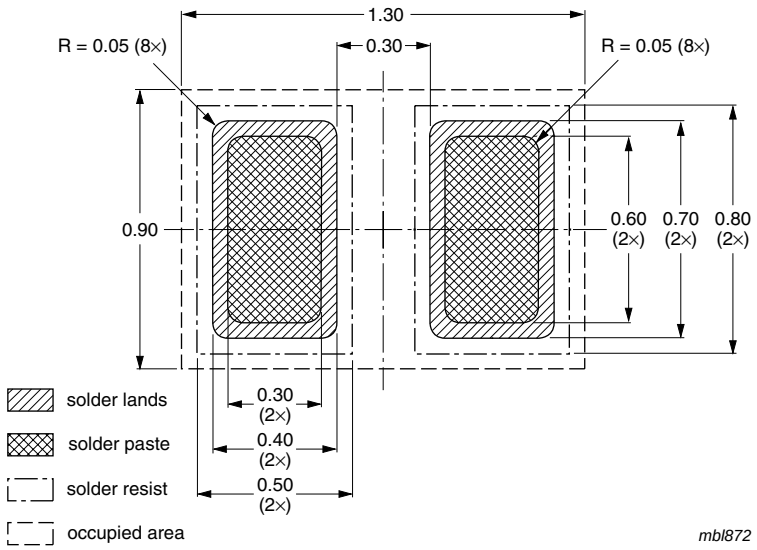

Reflow soldering is the only recommended soldering method.

Dimensions in mm

Fig 20. Reflow soldering footprint SOD882

© Nexperia B.V. 2017. All rights reserved

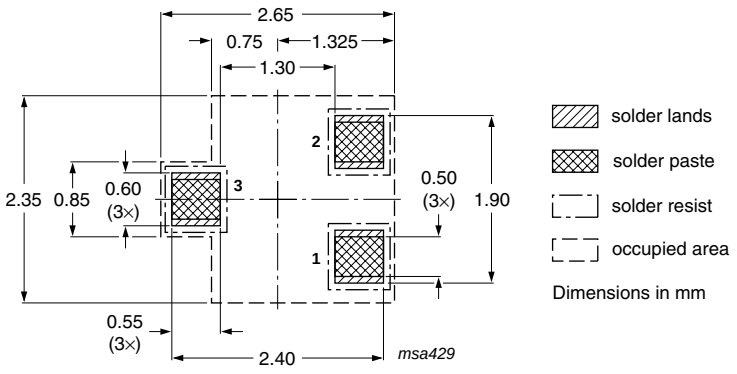

Dimensions in mm

Fig 21. Reflow soldering footprint SOT323 (SC-70)

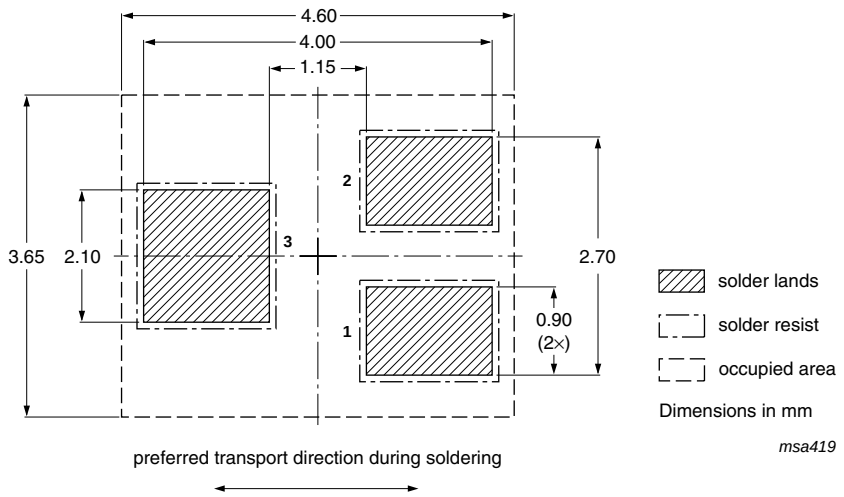

Dimensions in mm

Fig 22. Wave soldering footprint SOT323 (SC-70)

© Nexperia B.V. 2017. All rights reserved

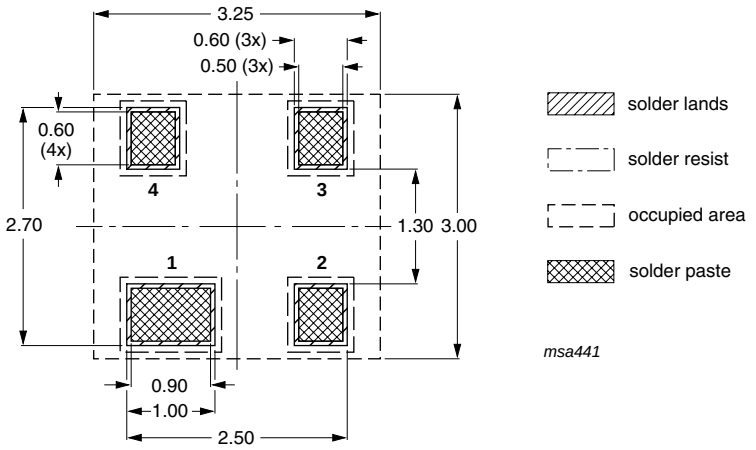

Dimensions in mm

Fig 23. Reflow soldering footprint SOT143B

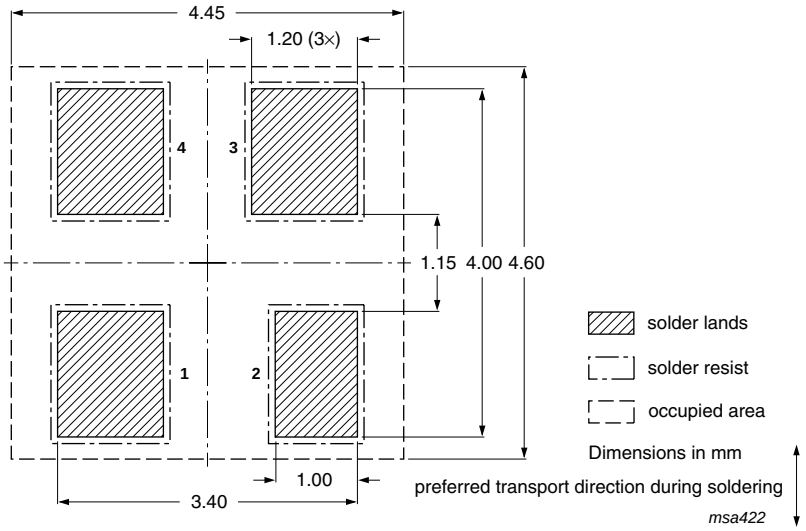

Dimensions in mm

Fig 24. Wave soldering footprint SOT143B

© Nexperia B.V. 2017. All rights reserved

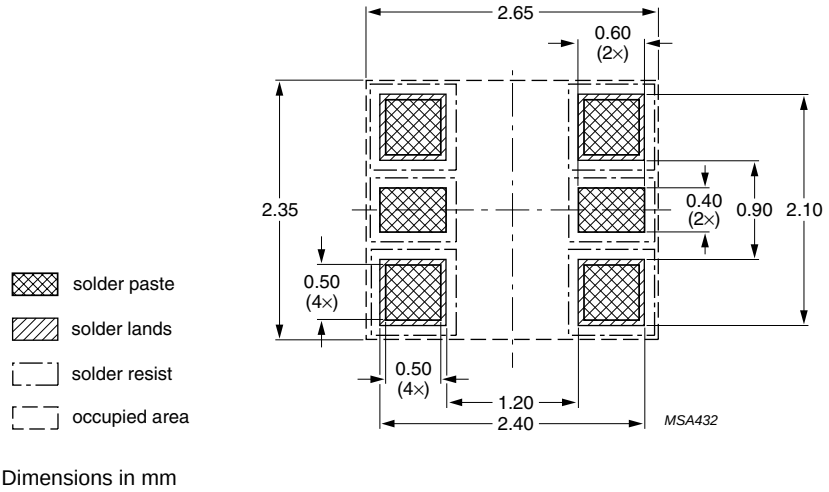

Fig 25. Reflow soldering footprint SOT363 (SC-88)

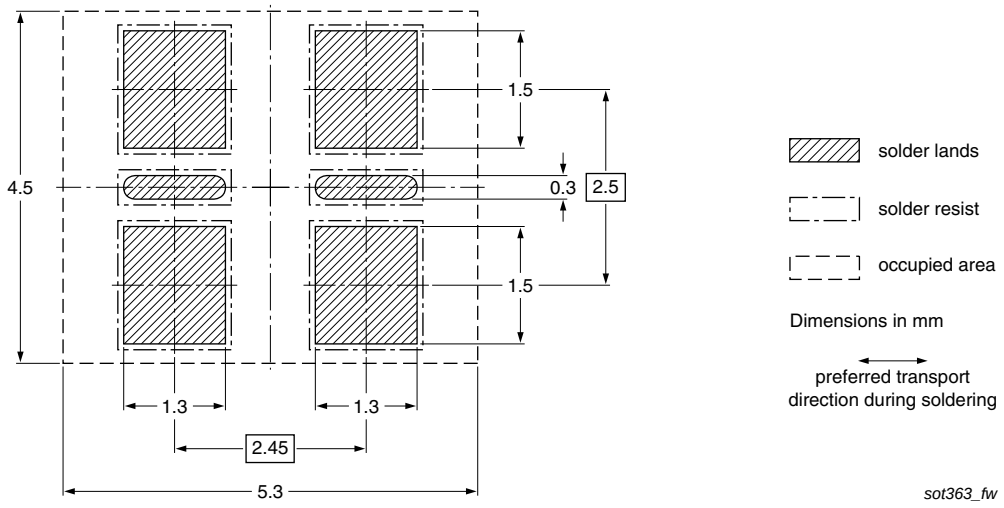

Fig 26. Wave soldering footprint SOT363 (SC-88)

© Nexperia B.V. 2017. All rights reserved

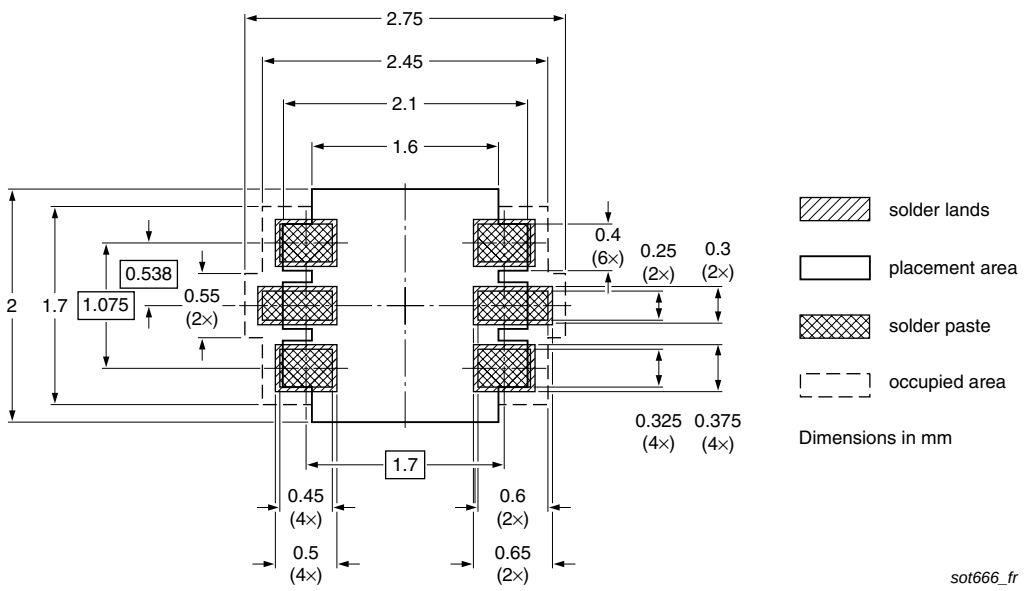

Reflow soldering is the only recommended soldering method.

Fig 27. Reflow soldering footprint SOT666

© Nexperia B.V. 2017. All rights reserved

11. Revision history

Table 10. Revision history

Document ID	Release date	Data sheet status	Change notice	Supersedes
BAS70_1PS7XSB70_SER_9	20100113	Product data sheet	-	BAS70_1PS7XSB70_SER_8
Modifications:	• This data sheet was changed to reflect the new company name NXP Semiconductors, including new legal definitions and disclaimers. No changes were made to the technical content.			
BAS70_1PS7XSB70_SER_8	20060504	Product data sheet	-	BAS70_1PS7XSB70_SER_7
BAS70_1PS7XSB70_SER_7	20050718	Product data sheet	-	1PS76SB70_2 1PS79SB70_1 BAS70H_1 BAS70L_1 BAS70-07V_1 BAS70VV_1 BAS70W_3 BAS70-07S_4 BAS70_SERIES_6
1PS76SB70_2	20040126	Product specification	-	1PS76SB70_1
1PS79SB70_1	19980716	Product specification	-	-
BAS70H_1	20050425	Product data sheet	-	-
BAS70L_1	20030520	Product specification	-	-
BAS70-07V_1	20020117	Product specification	-	-
BAS70VV_1	20040910	Product data sheet	-	-
BAS70W_3	19990326	Product specification	-	BAS70W_2
BAS70-07S_4	20030411	Product specification	-	BAS70_07S_3
BAS70_SERIES_6	20011011	Product specification	-	BAS70_5

© Nexperia B.V. 2017. All rights reserved

12. Legal information

12.1 Data sheet status

Document status[1][2]	Product status[3]	Definition
Objective [short] data sheet	Development	This document contains data from the objective specification for product development.
Preliminary [short] data sheet	Qualification	This document contains data from the preliminary specification.
Product [short] data sheet	Production	This document contains the product specification.

[1] Please consult the most recently issued document before initiating or completing a design.

[2] The term 'short data sheet' is explained in section "Definitions".

[3] The product status of device(s) described in this document may have changed since this document was published and may differ in case of multiple devices. The latest product status information is available on the Internet at URL http://www.nexperia.com.

12.2 Definitions

Draft — The document is a draft version only. The content is still under internal review and subject to formal approval, which may result in modifications or additions. Nexperia does not give any representations or warranties as to the accuracy or completeness of information included herein and shall have no liability for the consequences of use of such information.

Short data sheet — A short data sheet is an extract from a full data sheet with the same product type number(s) and title. A short data sheet is intended for quick reference only and should not be relied upon to contain detailed and full information. For detailed and full information see the relevant full data sheet, which is available on request via the local Nexperia sales office. In case of any inconsistency or conflict with the short data sheet, the full data sheet shall prevail.

12.3 Disclaimers

General — Information in this document is believed to be accurate and reliable. However, Nexperia does not give any representations or warranties, expressed or implied, as to the accuracy or completeness of such information and shall have no liability for the consequences of use of such information.

Right to make changes — Nexperia reserves the right to make changes to information published in this document, including without limitation specifications and product descriptions, at any time and without notice. This document supersedes and replaces all information supplied prior to the publication hereof.

Suitability for use — Nexperia products are not designed, authorized or warranted to be suitable for use in medical, military, aircraft, space or life support equipment, nor in applications where failure or malfunction of a Nexperia product can reasonably be expected to result in personal injury, death or severe property or environmental damage. Nexperia accepts no liability for inclusion and/or use of Nexperia products in such equipment or applications and therefore such inclusion and/or use is at the customer's own risk.

Applications — Applications that are described herein for any of these products are for illustrative purposes only. Nexperia makes no representation or warranty that such applications will be suitable for the specified use without further testing or modification.

Limiting values — Stress above one or more limiting values (as defined in the Absolute Maximum Ratings System of IEC 60134) may cause permanent damage to the device. Limiting values are stress ratings only and operation of the device at these or any other conditions above those given in the Characteristics sections of this document is not implied. Exposure to limiting values for extended periods may affect device reliability.

Terms and conditions of sale — Nexperia products are sold subject to the general terms and conditions of commercial sale, as published at http://www.nexperia.com/profile/terms, including those pertaining to warranty, intellectual property rights infringement and limitation of liability, unless explicitly otherwise agreed to in writing by Nexperia. In case of any inconsistency or conflict between information in this document and such terms and conditions, the latter will prevail.

No offer to sell or license — Nothing in this document may be interpreted or construed as an offer to sell products that is open for acceptance or the grant, conveyance or implication of any license under any copyrights, patents or other industrial or intellectual property rights.

Export control — This document as well as the item(s) described herein may be subject to export control regulations. Export might require a prior authorization from national authorities.

Quick reference data — The Quick reference data is an extract of the product data given in the Limiting values and Characteristics sections of this document, and as such is not complete, exhaustive or legally binding.

12.4 Trademarks

Notice: All referenced brands, product names, service names and trademarks are the property of their respective owners.

13. Contact information

For more information, please visit: **http://www.nexperia.com**

For sales office addresses, please send an email to: **salesaddresses@nexperia.com**

© Nexperia B.V. 2017. All rights reserved

14. Contents

1 Product profile 1
1.1 General description 1
1.2 Features 1
1.3 Applications 1
1.4 Quick reference data 2
2 Pinning information 2
3 Ordering information 4
4 Marking 5
5 Limiting values 5
6 Thermal characteristics 6
7 Characteristics 6
8 Package outline 8
9 Packing information 10
10 Soldering 11
11 Revision history 18
12 Legal information 19
12.1 Data sheet status 19
12.2 Definitions 19
12.3 Disclaimers 19
12.4 Trademarks 19
13 Contact information 19
14 Contents 20

© Nexperia B.V. 2017. All rights reserved

For more information, please visit: http://www.nexperia.com
For sales office addresses, please send an email to: salesaddresses@nexperia.com
Date of release: 13 January 2010

ООО «ЛайфЭлектроникс» “LifeElectronics” LLC

ИНН 7805602321 КПП 780501001 Р/С 40702810122510004610 ФАКБ "АБСОЛЮТ БАНК" (ЗАО) в г.Санкт-Петербурге К/С 30101810900000000703 БИК 044030703

Компания «Life Electronics» занимается поставками электронных компонентов импортного и отечественного производства от производителей и со складов крупных дистрибьюторов Европы, Америки и Азии.

С конца 2013 года компания активно расширяет линейку поставок компонентов по направлению коаксиальный кабель, кварцевые генераторы и конденсаторы (керамические, пленочные, электролитические), за счёт заключения дистрибьюторских договоров

Мы предлагаем:

- *Конкурентоспособные цены и скидки постоянным клиентам.*
- *Специальные условия для постоянных клиентов.*
- *Подбор аналогов.*
- *Поставку компонентов в любых объемах, удовлетворяющих вашим потребностям.*

- *Приемлемые сроки поставки, возможна ускоренная поставка.*
- *Доставку товара в любую точку России и стран СНГ.*
- *Комплексную поставку.*
- *Работу по проектам и поставку образцов.*
- *Формирование склада под заказчика.*

- *Сертификаты соответствия на поставляемую продукцию (по желанию клиента).*
- *Тестирование поставляемой продукции.*
- *Поставку компонентов, требующих военную и космическую приемку.*
- *Входной контроль качества.*
- *Наличие сертификата ISO.*

В составе нашей компании организован Конструкторский отдел, призванный помогать разработчикам, и инженерам.

Конструкторский отдел помогает осуществить:

- *Регистрацию проекта у производителя компонентов.*
- *Техническую поддержку проекта.*
- *Защиту от снятия компонента с производства.*
- *Оценку стоимости проекта по компонентам.*
- *Изготовление тестовой платы монтаж и пусконаладочные работы.*

Тел: +7 (812) 336 43 04 (многоканальный)
Email: org@lifeelectronics.ru

www.lifeelectronics.ru