THIS DRAWING IS UNPUBLISHED. RELEASED FOR PUBLICATION 20
© COPYRIGHT 20 BY - ALL RIGHTS RESERVED.

LOC	DIST
GP	00

REVISIONS

P	LTR	DESCRIPTION	DATE	DWN	APVD
	B	REVISED PER ECO-15-017919	06APR2016	AP	RP

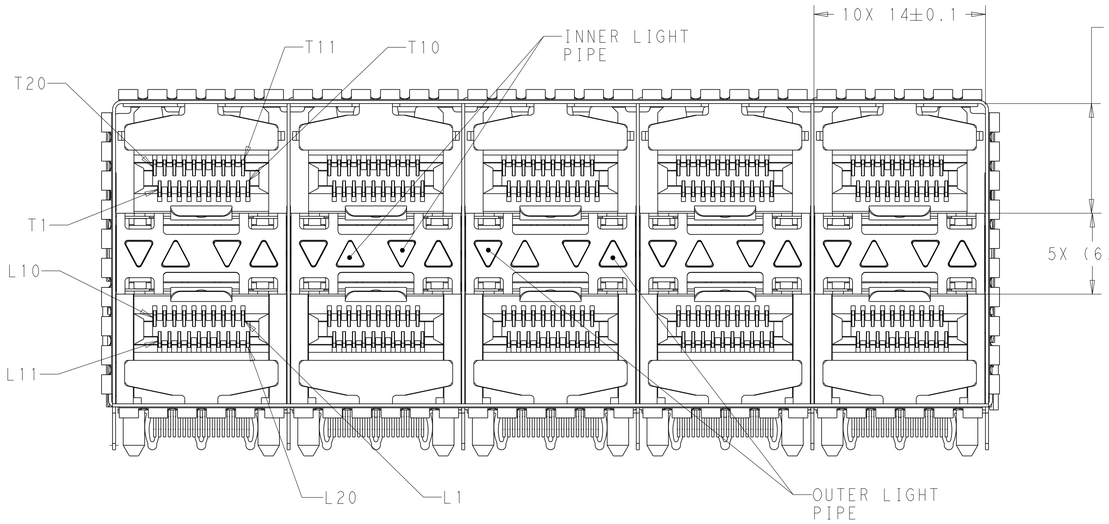

2132403-5 AS SHOWN

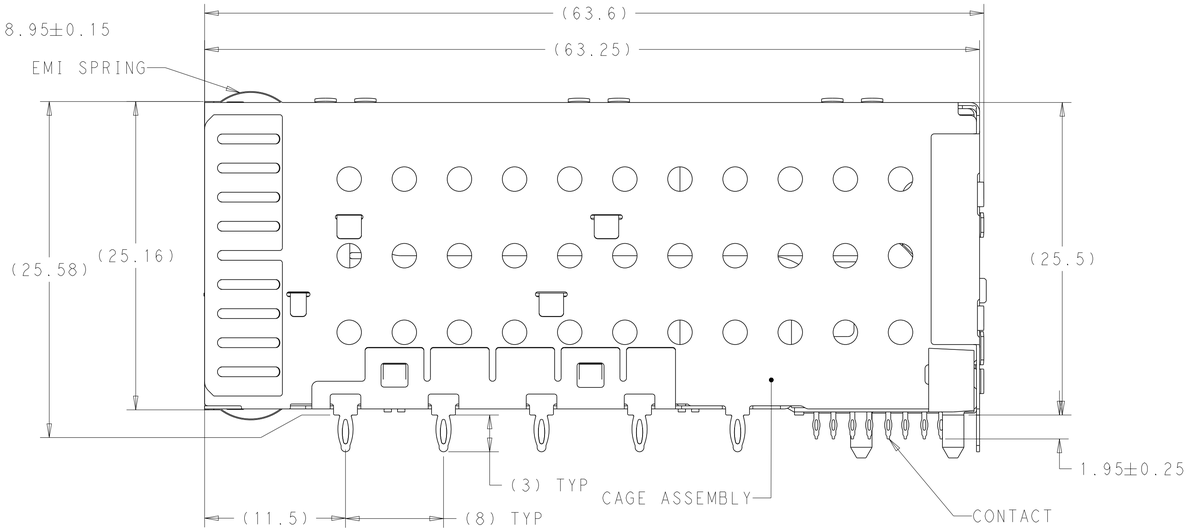

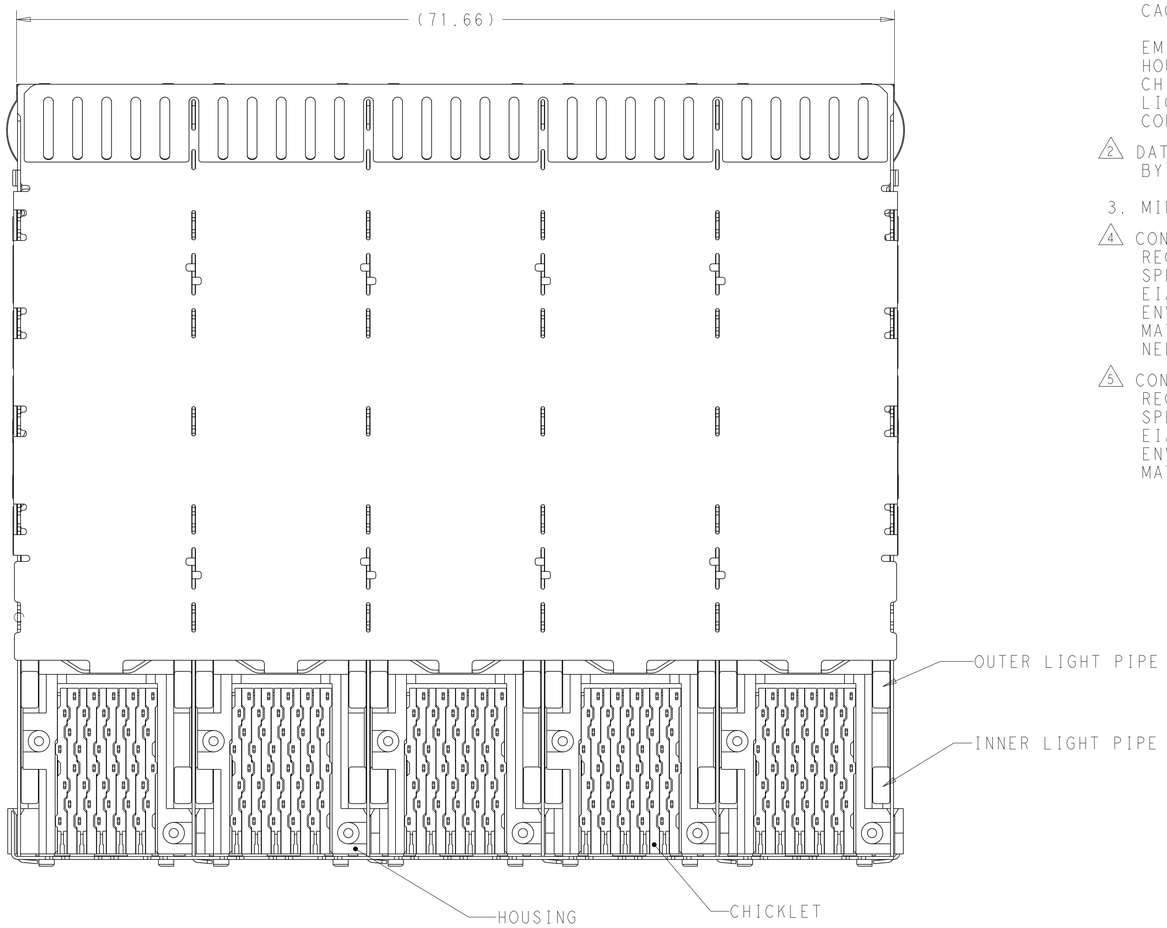

1. MATERIALS:
   CAGE ASSEMBLY- NICKEL SILVER ALLOY PER ASTM B 122.
   EMI SPRING- COPPER ALLOY.
   HOUSING- BLACK LCP, UL 94V-O RATED.
   CHICKLET- BLACK LCP, UL 94V-O RATED.
   LIGHT PIPE- POLYCARBONATE, CLEAR.
   CONTACT- COPPER ALLOY.

2. DATUM AND BASIC DIMENSIONS ESTABLISHED BY CUSTOMER.

3. MINIMUM PCB THICKNESS OF 1.5.

4. CONTACT FINISH: CONFORMS TO THE REQUIREMENTS OF TE PRODUCT SPECIFICATION 108-2331, BASED ON EIA/ECA-364-1000.01A, (CONTROLLED ENVIRONMENT APPLICATIONS) ON MATING INTERFACE, TIN-LEAD ON NEEDLE EYE.

5. CONTACT FINISH: CONFORMS TO THE REQUIREMENTS OF TE PRODUCT SPECIFICATION 108-2331, BASED ON EIA/ECA-364-1000.01A, (CONTROLLED ENVIRONMENT APPLICATIONS) ON MATING INTERFACE, TIN ON NEEDLE EYE.

6. FOR HOLE SIZE AND PLATINGS, SEE APPLICATION SPEC 114-13219.

7. THE ENTIRE AREA OF THE CONNECTOR FOOTPRINT, INDICATED BY THE DASHED LINE, TO BE CONSIDERED THE KEEPOUT AREA FOR COMPONENTS AND SIGNAL TRACES, TOP SIDE ONLY. TOP SIDE TRACES ALLOWED WITHIN CONNECTOR HOLE PATTERN.

8. LIGHT PIPE PAD LAYOUT IS FOR 0805 LOW PROFILE LED PACKAGE WITH A HEIGHT OF 0.8mm.

9. EMI SPRING FINISH: 0.8µm MINIMUM MATTE TIN OVER 0.8µm MINIMUM NICKEL, NON-PLATED EDGES PERMISSIBLE.

10. ADDITIONAL COMPONENT LOCATED WITHIN LATCH PLATE FOR EMI SUPPRESSION.

ENHANCED EMI	FINISH	DESCRIPTION	PART NUMBER
YES 10	5	NO LIGHT PIPES	1-2132403-8
		OUTER 2 LIGHT PIPES	1-2132403-7
		INNER 2 LIGHT PIPES	1-2132403-6
		4 LIGHT PIPES	1-2132403-5
NO	5	NO LIGHT PIPES	2132403-8
		OUTER 2 LIGHT PIPES	2132403-7
		INNER 2 LIGHT PIPES	2132403-6
		4 LIGHT PIPES	2132403-5
SUPERSEDED NO	4	NO LIGHT PIPES	2132403-4
		OUTER 2 LIGHT PIPES	2132403-3
		INNER 2 LIGHT PIPES	2132403-2
		4 LIGHT PIPES	2132403-1

THIS DRAWING IS A CONTROLLED DOCUMENT. DIMENSIONING AND TOLERANCING PER ASME Y14.5M-2009

DIMENSIONS: mm

TOLERANCES UNLESS OTHERWISE SPECIFIED:
0 PLC ±0.1
1 PLC ±0.1
2 PLC ±0.1
3 PLC ±-
4 PLC ±-
ANGLES ±-

MATERIAL 1

FINISH 4 5 9

DWN C. VALENTINE 06JAN2010
CHK J. PETERSON 06JAN2010
APVD J. PETERSON 06JAN2010
PRODUCT SPEC 108-2331
APPLICATION SPEC 114-13219
WEIGHT -

TE Connectivity

NAME CAGE AND PT CONNECTOR ASSEMBLY, WITH EMI SPRINGS, PRESS FIT, 2X5, STACKED SFP+

SIZE	CAGE CODE	DRAWING NO	RESTRICTED TO
A1	00779	C-2132403	-

CUSTOMER DRAWING SCALE 4:1 SHEET 1 OF 4 REV B

THIS DRAWING IS UNPUBLISHED. RELEASED FOR PUBLICATION 20
© COPYRIGHT 20 BY - ALL RIGHTS RESERVED.

LOC	DIST

REVISIONS

P	LTR	DESCRIPTION	DATE	DWN	APVD
	-	SEE SHEET 1	-	-	-

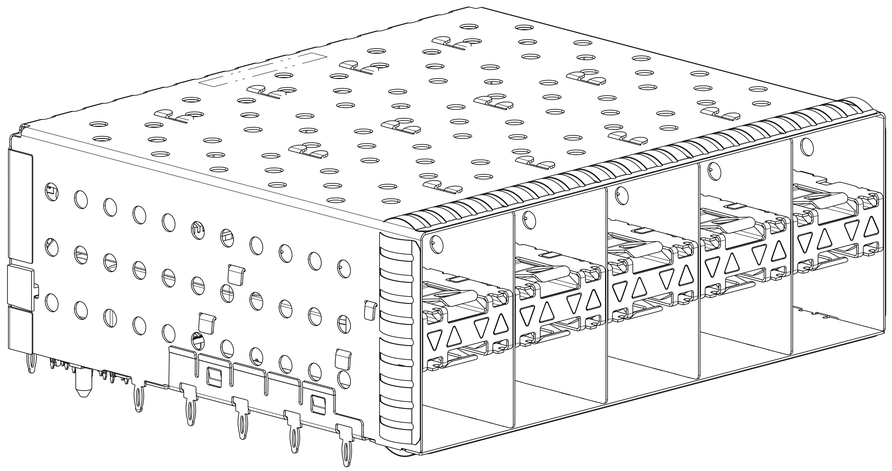

2132403-5 AND 1-2132403-5
SCALE 3:1

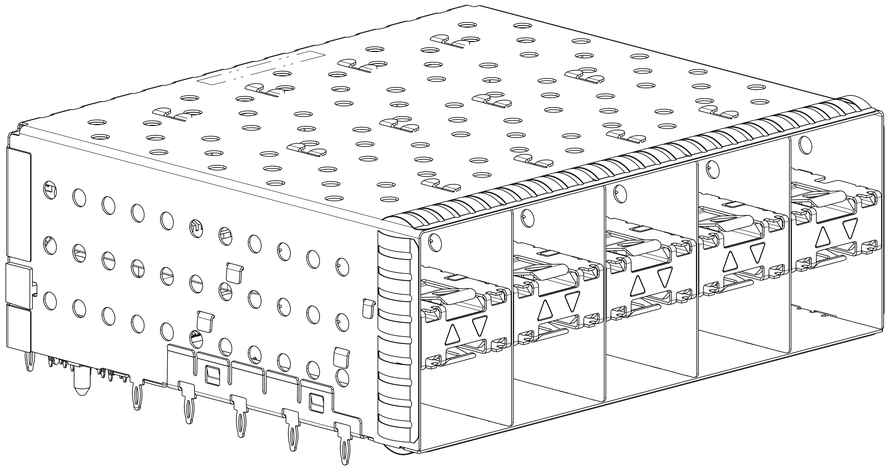

2132403-6 AND 1-2132403-6
SCALE 3:1

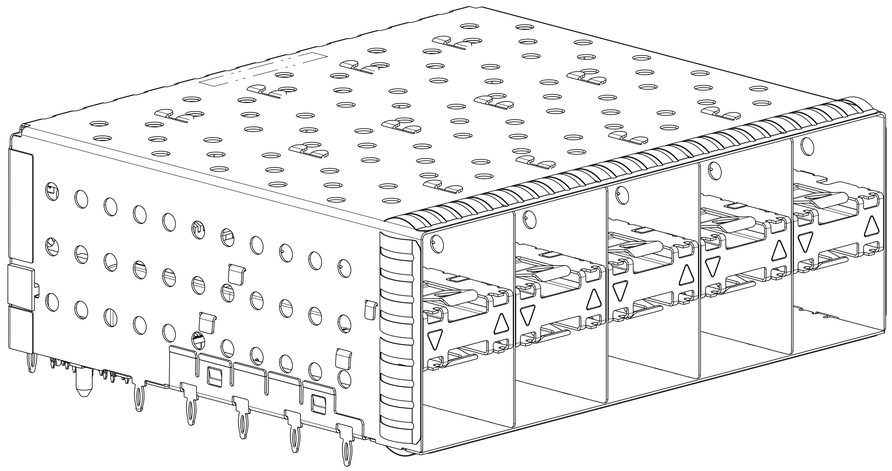

2132403-7 AND 1-2132403-7
SCALE 3:1

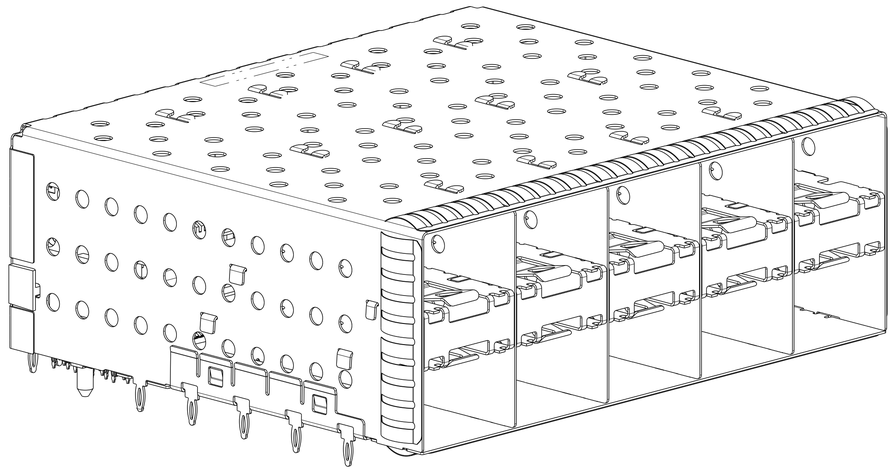

2132403-8 AND 1-2132403-8
SCALE 3:1

THIS DRAWING IS A CONTROLLED DOCUMENT.
DIMENSIONING AND TOLERANCING
PER ASME Y14.5M-2009

DIMENSIONS: mm

TOLERANCES UNLESS OTHERWISE SPECIFIED:

0 PLC	±0.1
1 PLC	±0.1
2 PLC	±0.1
3 PLC	±-
4 PLC	±-
ANGLES	±-

MATERIAL

FINISH

DWN	C. VALENTINE	06JAN2010
CHK	J. PETERSON	06JAN2010
APVD	J. PETERSON	06JAN2010

PRODUCT SPEC: 108-2331

APPLICATION SPEC: 114-13219

WEIGHT: -

TE Connectivity

NAME: CAGE AND PT CONNECTOR ASSEMBLY, WITH EMI SPRINGS, PRESS FIT, 2X5, STACKED SFP+

SIZE	CAGE CODE	DRAWING NO	RESTRICTED TO
A1	00779	C-2132403	-

CUSTOMER DRAWING

SCALE 4:1 | SHEET 2 OF 4 | REV B

4805 (3/11)

THIS DRAWING IS UNPUBLISHED. RELEASED FOR PUBLICATION 20
© COPYRIGHT 20 BY - ALL RIGHTS RESERVED.

LOC	DIST	REVISIONS				
		P	LTR	DESCRIPTION	DATE	DWN	APVD
			-	SEE SHEET 1	-	-	-

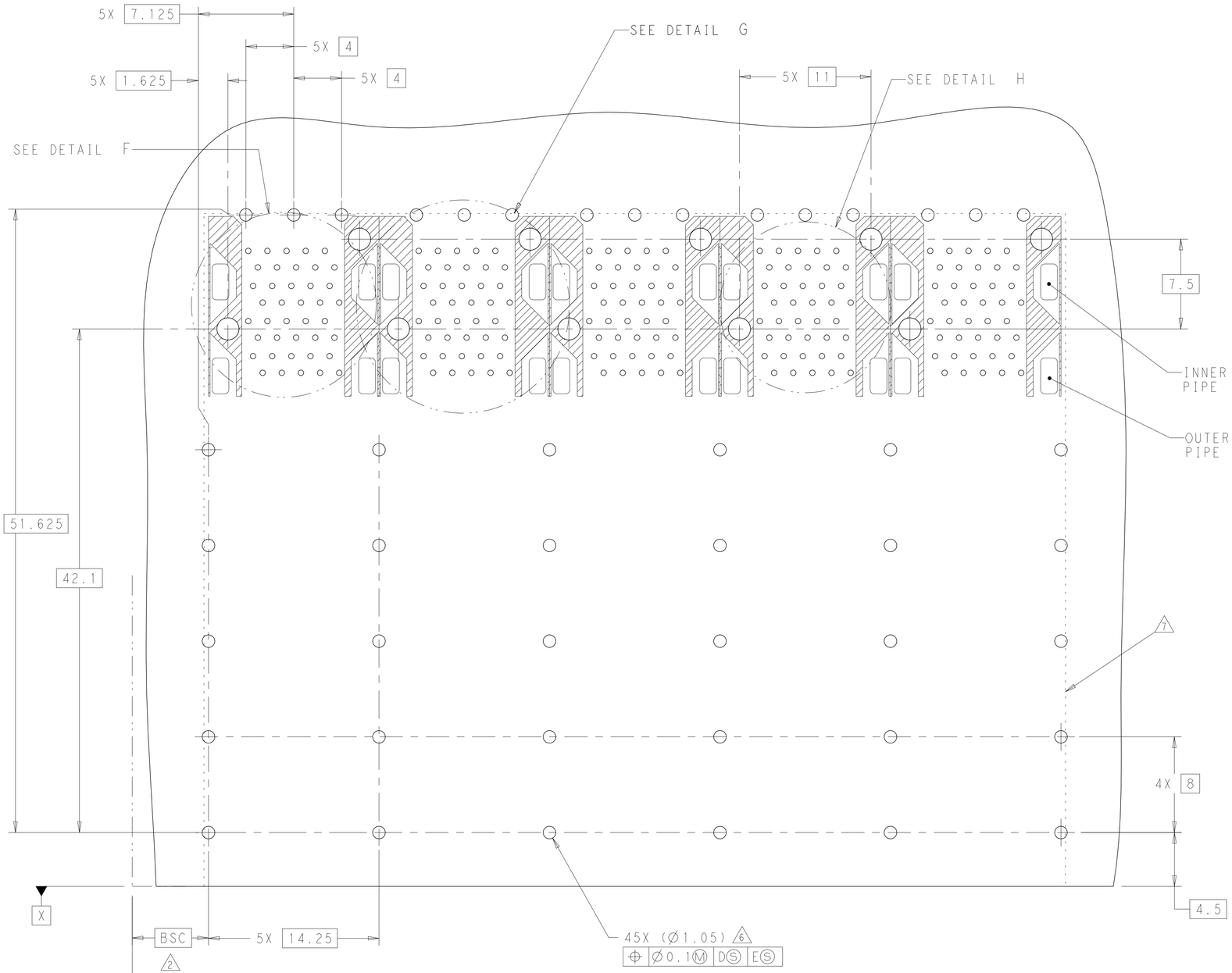

RECOMMENDED PCB LAYOUT
COMPONENT SIDE OF BOARD
SCALE 5:1

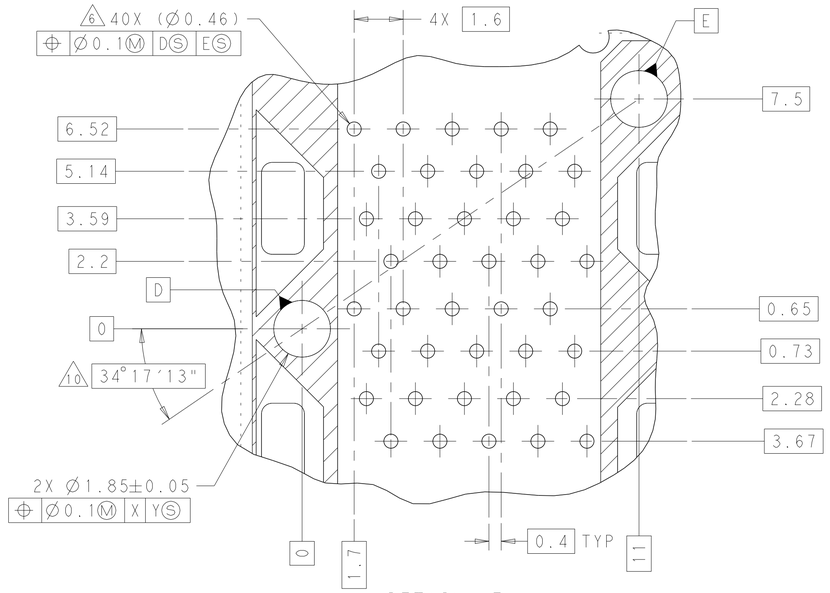

DETAIL F
5 PLACES INDIVIDUALLY
SCALE 10:1

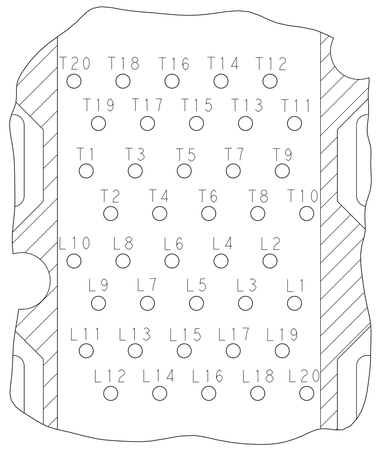

DETAIL H
CONNECTOR PIN-OUT
COMPONENT SIDE OF BOARD
SCALE 10:1

THIS DRAWING IS A CONTROLLED DOCUMENT. DIMENSIONING AND TOLERANCING PER ASME Y14.5M-2009

DIMENSIONS: mm

TOLERANCES UNLESS OTHERWISE SPECIFIED:
0 PLC ±0.1
1 PLC ±0.1
2 PLC ±0.1
3 PLC ±.
4 PLC ±.
ANGLES ±.

MATERIAL
FINISH

DWN C. VALENTINE 06JAN2010
CHK J. PETERSON 06JAN2010
APVD J. PETERSON 06JAN2010
PRODUCT SPEC 108-2331
APPLICATION SPEC 114-13219
WEIGHT -

TE Connectivity

NAME CAGE AND PT CONNECTOR ASSEMBLY, WITH EMI SPRINGS, PRESS FIT, 2X5, STACKED SFP+

SIZE	CAGE CODE	DRAWING NO	RESTRICTED TO
A1	00779	C-2132403	-

CUSTOMER DRAWING | SCALE 4:1 | SHEET 3 OF 4 | REV B

4805 (3/11)

THIS DRAWING IS UNPUBLISHED. RELEASED FOR PUBLICATION 20
© COPYRIGHT 20 BY - ALL RIGHTS RESERVED.

LOC	DIST

REVISIONS

P	LTR	DESCRIPTION	DATE	DWN	APVD
	-	SEE SHEET 1	-	-	-

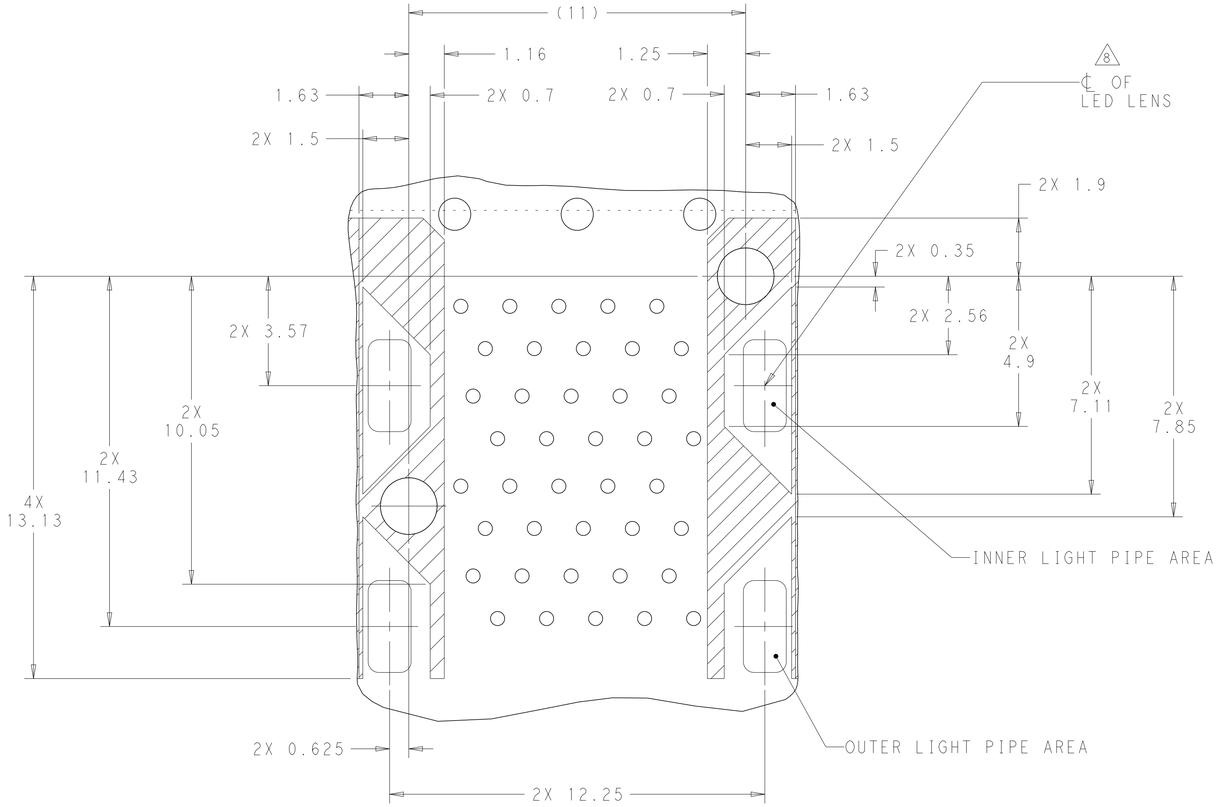

DETAIL G
CONNECTOR HOUSING
KEEPOUT ZONE
SCALE 10:1

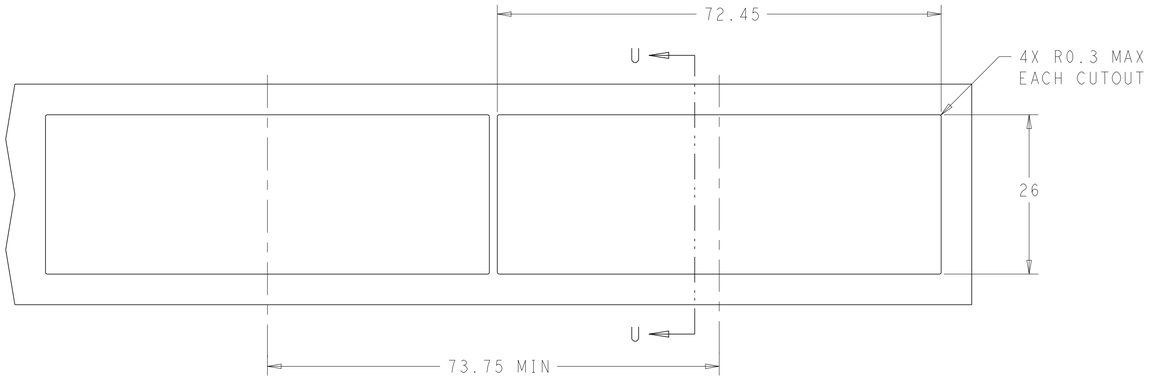

RECOMMENDED PANEL CUTOUT
AND PC BOARD, PANEL POSITION
SCALE 2:1

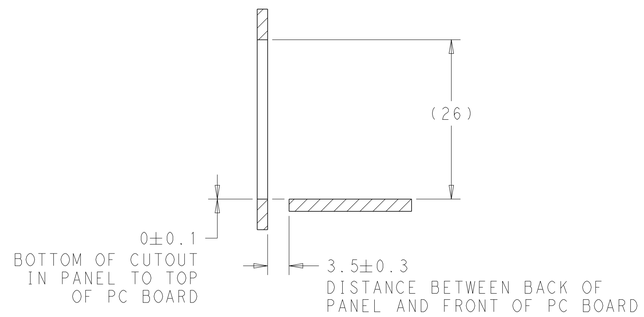

SECTION U-U

THIS DRAWING IS A CONTROLLED DOCUMENT.
DIMENSIONING AND TOLERANCING
PER ASME Y14.5M-2009

DIMENSIONS: mm

TOLERANCES UNLESS OTHERWISE SPECIFIED:
0 PLC ±0.1
1 PLC ±0.1
2 PLC ±0.1
3 PLC ±-
4 PLC ±-
ANGLES ±-

MATERIAL
FINISH

DWN 06JAN2010 C. VALENTINE
CHK 06JAN2010 J. PETERSON
APVD 06JAN2010 J. PETERSON

PRODUCT SPEC 108-2331
APPLICATION SPEC 114-13219
WEIGHT -

TE Connectivity

NAME
CAGE AND PT CONNECTOR ASSEMBLY,
WITH EMI SPRINGS,
PRESS FIT, 2X5, STACKED SFP+

SIZE	CAGE CODE	DRAWING NO	RESTRICTED TO
A1	00779	C-2132403	-

CUSTOMER DRAWING | SCALE 4:1 | SHEET 4 OF 4 | REV B

4805 (3/11)

ООО «ЛайфЭлектроникс» “LifeElectronics” LLC

ИНН 7805602321 КПП 780501001 Р/С 40702810122510004610 ФАКБ "АБСОЛЮТ БАНК" (ЗАО) в г.Санкт-Петербурге К/С 30101810900000000703 БИК 044030703

Компания «Life Electronics» занимается поставками электронных компонентов импортного и отечественного производства от производителей и со складов крупных дистрибьюторов Европы, Америки и Азии.

С конца 2013 года компания активно расширяет линейку поставок компонентов по направлению коаксиальный кабель, кварцевые генераторы и конденсаторы (керамические, пленочные, электролитические), за счёт заключения дистрибьюторских договоров

Мы предлагаем:

- *Конкурентоспособные цены и скидки постоянным клиентам.*
- *Специальные условия для постоянных клиентов.*
- *Подбор аналогов.*
- *Поставку компонентов в любых объемах, удовлетворяющих вашим потребностям.*

- *Приемлемые сроки поставки, возможна ускоренная поставка.*
- *Доставку товара в любую точку России и стран СНГ.*
- *Комплексную поставку.*
- *Работу по проектам и поставку образцов.*
- *Формирование склада под заказчика.*

- *Сертификаты соответствия на поставляемую продукцию (по желанию клиента).*
- *Тестирование поставляемой продукции.*
- *Поставку компонентов, требующих военную и космическую приемку.*
- *Входной контроль качества.*
- *Наличие сертификата ISO.*

В составе нашей компании организован Конструкторский отдел, призванный помогать разработчикам, и инженерам.

Конструкторский отдел помогает осуществить:

- *Регистрацию проекта у производителя компонентов.*
- *Техническую поддержку проекта.*
- *Защиту от снятия компонента с производства.*
- *Оценку стоимости проекта по компонентам.*
- *Изготовление тестовой платы монтаж и пусконаладочные работы.*

Тел: +7 (812) 336 43 04 (многоканальный)
Email: org@lifeelectronics.ru

www.lifeelectronics.ru