Honeywell

MG Series Magnets

Datasheet

MG Series Magnets

The MG Series magnets offered by Honeywell Sensing and Control includes several bar magnets in various sizes and strengths for actuating Hall-effect and magnetoresistive sensor ICs. These bar magnets are for use in sensors with unipolar or omnipolar magnetic characteristics.

Made from different magnetic materials and available in a variety of sizes and shapes, the MG Series magnets can be used for evaluation and design of magnetic systems, and in numerous potential applications across a variety of different industries. Some of these magnets are offered with threaded bushings for easy installation and have a good resistance to demagnetization which could be caused by magnetic shock. These magnets are designed to provide minimum magnetic fields at a specified distance to help system designers match the appropriate magnet to their requirements.

Value to the Customer

- Variety of sizes, shapes, and packaging options to choose from

  The MG Series consists of a range of magnets based on varying dimensions and packaging types to help customers identify the most appropriate magnet that can be used to evaluate Honeywell's Hall-effect and magnetoresistive sensor ICs in their applications.

DID YOU KNOW?

Magnetic sensing characteristics of Hall-effect sensor ICs are specified within particular ranges.

For example, assume an application with a temperature range of -40 °C to 125 °C [-40 °F to 257 °F] using an SS443A. The operate point may be up to 215 Gauss [21.5 mT] and the release point may be 60 Gauss to 190 Gauss [6.0 mT to 19.0 mT]. To ensure reliable operation, at least 215 Gauss [21.5 mT] must be presented to the sensor. For a robust activation, the flux from the magnet at the maximum operating gap should be 20 % to 100 % higher than the sensor's maximum operating point over temperature. The Gauss level must then be reduced below 60 Gauss [6.0 mT] to ensure that the sensor will release.

Therefore, it is necessary to know the flux density (Gauss) measured at the chip to be able to:

- Select a device with the best magnetic characteristics for the application
- Select the best magnet
- Verify the desired mechanical characteristics

Features and Benefits

PHYSICAL STRENGTH

The MG Series offers Alnico or Indox magnets which exhibit good physical strength.

MAGNETIC FIELD

Rare Earth (SmCo-Samarium Cobalt) magnets from MG Series offer strong magnetic field in compact sizes.

Choose the best fit option

MAGNETIC MATERIAL

Honeywell's MG Series offer magnets made from different magnetic materials allowing customers to choose the most suitable option for their application.

OPERATING TEMPERATURE

The MG Series magnets exhibit good stability over a wide range of operating temperatures, as low as -40 °C [-40 °F] or as high as 140 °C [284 °F] to 300 °C [572 °F], depending on the magnet.

OPERATING MAGNETIC GAUSS LEVELS

The MG Series offers a wide selection of magnets operating across various magnetic Gauss levels to choose from.

Potential Applications

These magnets are used as actuators for Hall-effect and magnetoresistive sensor ICs which in turn can be used in a number of potential industrial and medical applications.

INDUSTRIAL

- **Door or lid closure detection in appliances or electronically controlled containers**
  The unipolar sensor recessed in the door frame with a magnet embedded in the door can help in sensing the open and close positions in doors or lids in appliances or electronically controlled containers.
- **Simple speed and RPM (revolutions per minute) sensing in fitness and industrial equipment**
  A single magnet of appropriate polarity mounted on the motor shaft of a treadmill when actuates a unipolar Hall-effect sensor IC generates single digital pulse for each revolution which in turn can help measure the speed or RPM of the equipment.

MEDICAL

- **Position sensor in hospital beds and medical equipment**
  Magnets can be used to determine the home or end-of-travel position of the equipment on an activator arm of hospital beds and medical equipment.
- **Medication bin monitor on portable drug carts**
  These magnets can be mounted on a drug dispensing drawer to detect the open or close position using a unipolar Hall-effect sensor IC.

MG Series

MAGNET CURVES

The curves shown on the graphs are typical plots of induction (Gauss) versus distance for various magnets.

Mode of operation: Head-on

Figure 1. 101MG2L1

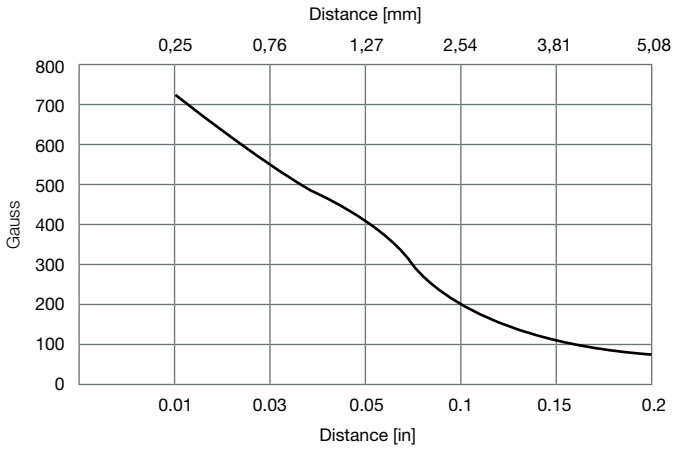

Figure 2. 101MG3

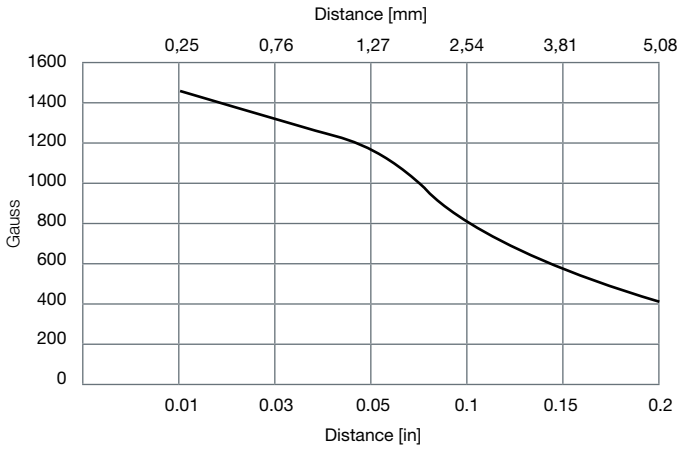

Figure 3. 101MG7

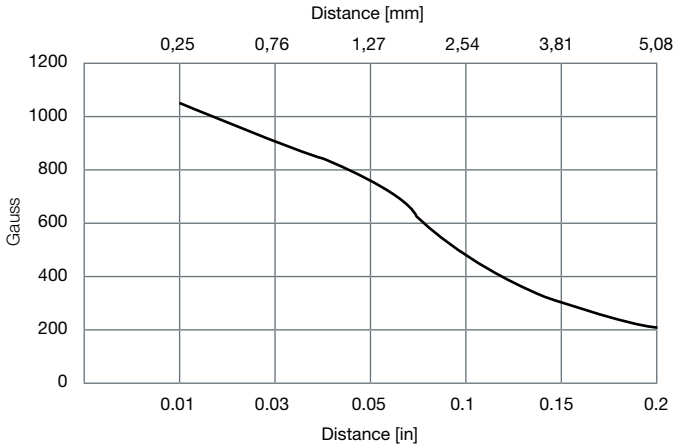

Figure 4. 101MG8

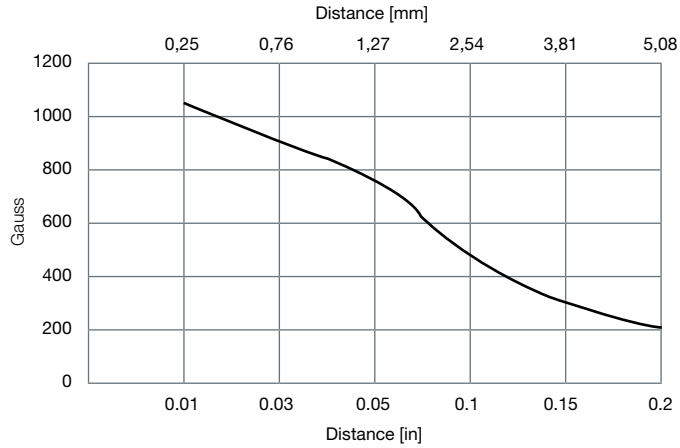

Figure 5. 102MG11

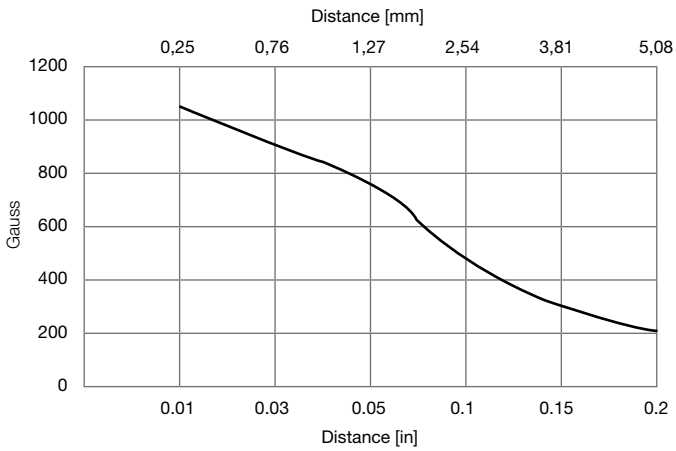

Figure 6. 102MG15

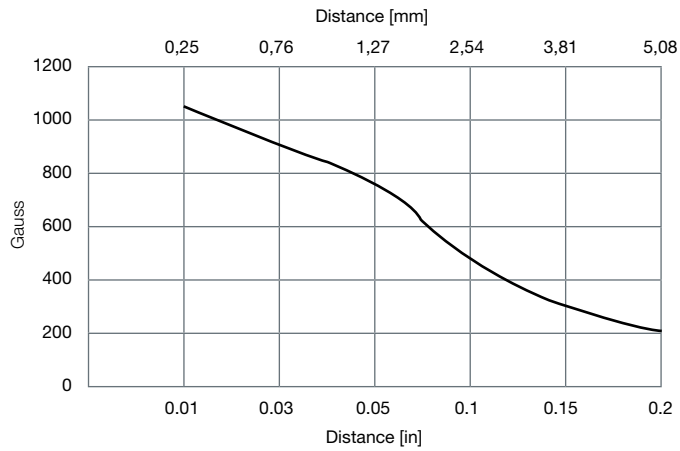

MG Series Magnets

Figure 7. 103MG5

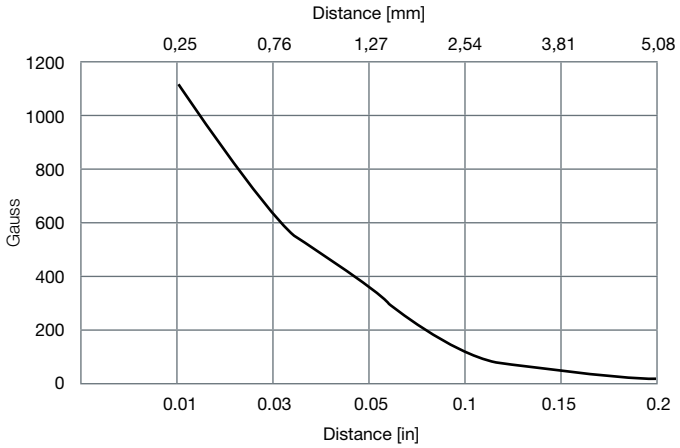

Figure 8. 103MG8

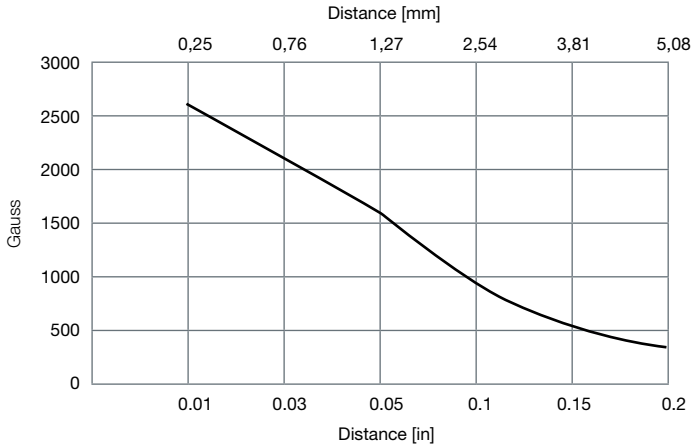

Figure 9. 104MG1

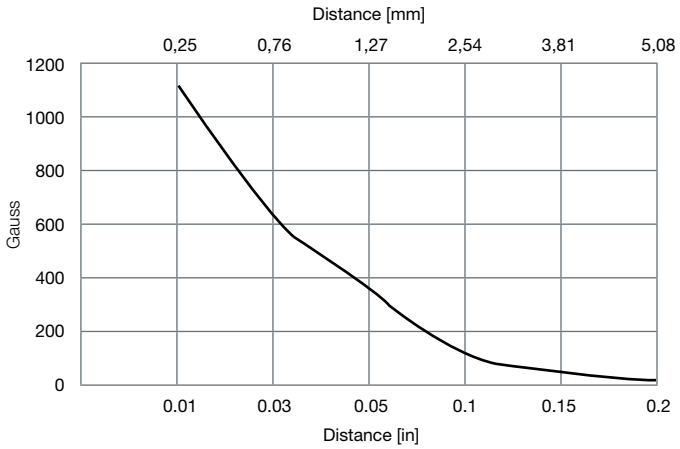

Figure 10. 104MG2

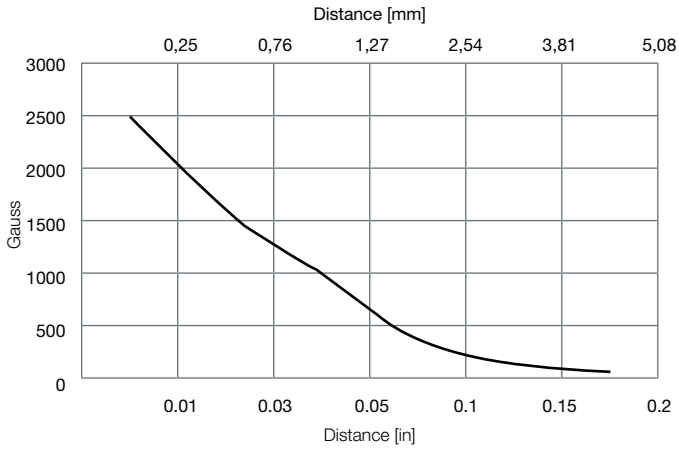

Figure 11. 104MG3

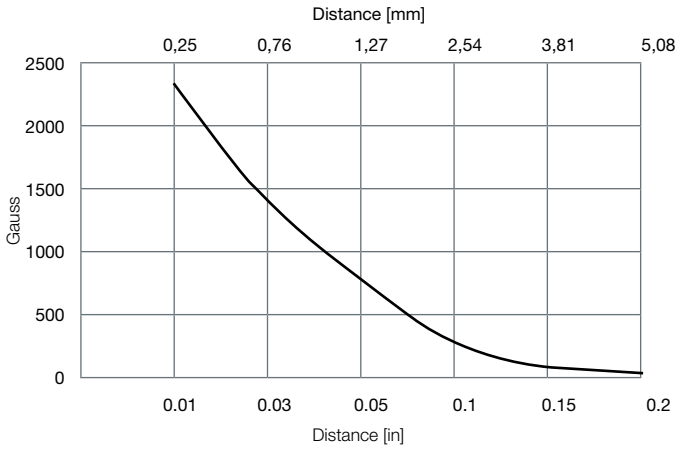

Figure 12. 106MG10

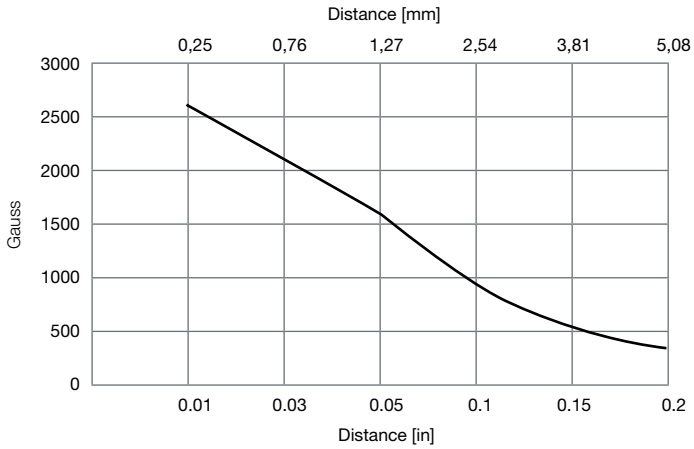

Figure 13. 107MG1

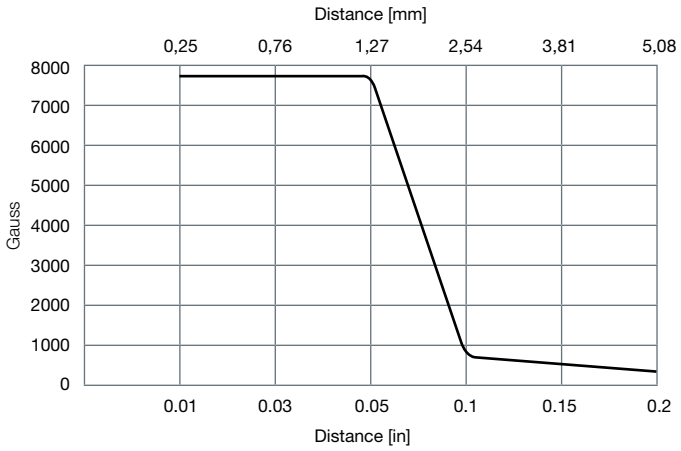

Mode of operation: Slide-by

Figure 14. 101MG2L1

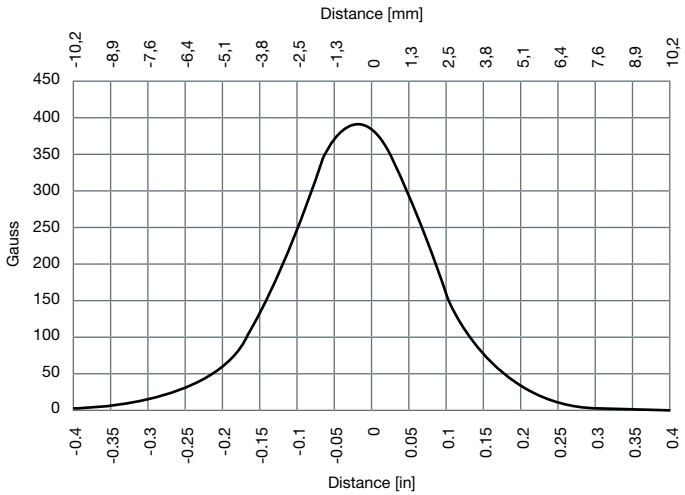

Figure 15. 101MG3

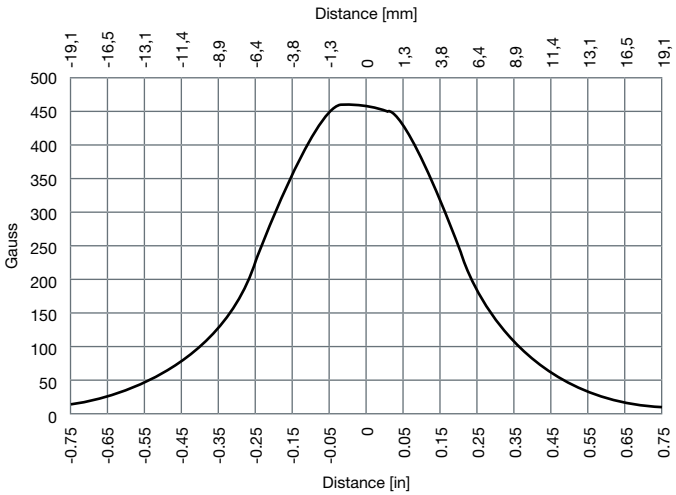

Figure 16. 101MG7

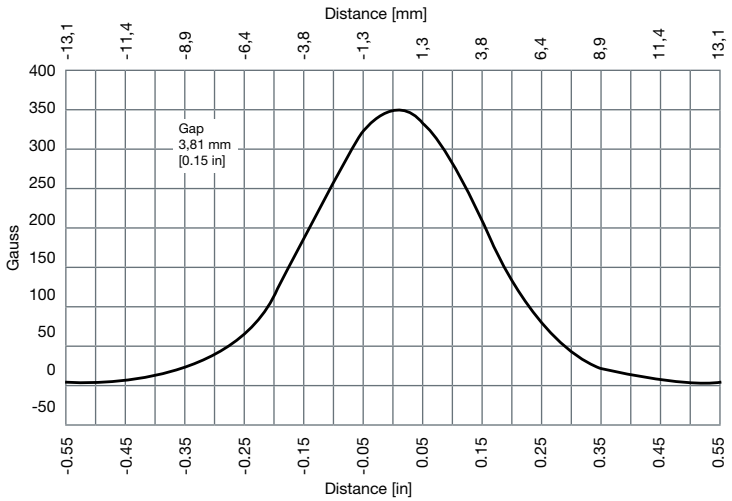

Figure 17. 103MG5

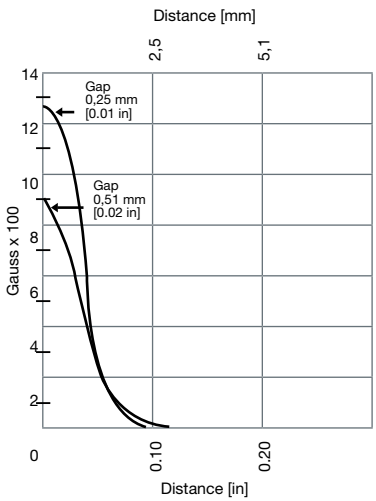

MG Series Magnets

Figure 18. 103MG8

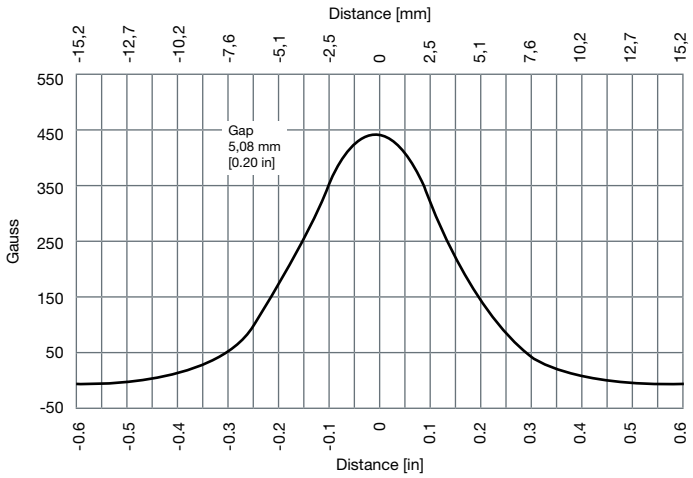

Figure 19. 106MG10

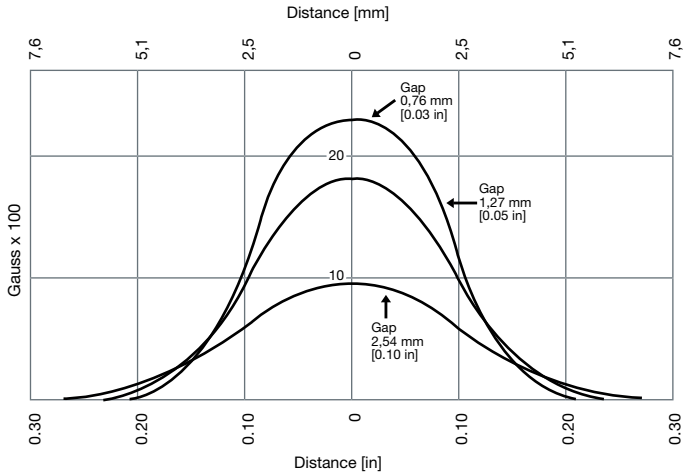

Figure 20. 107MG1

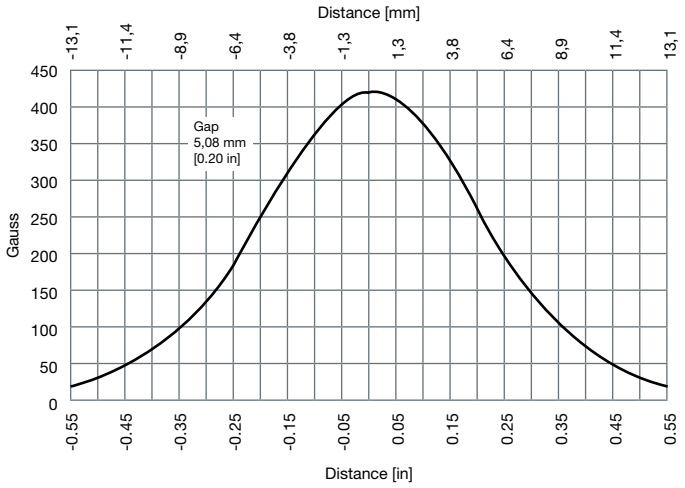

METHOD OF MAGNET ACTUATION

There are many ways to apply magnets in Hall-effect sensor applications. The more common methods are described below.

HEAD-ON ACTUATION

For “head-on” actuation, there should be sufficient magnet travel to provide at least 10 % flux overdrive of both maximum operate and minimum release characteristics of the sensor. The target is centered over the point of maximum sensitivity and is moved “head-on” to the sensor, then backed off.

Figure 21. Unipolar Head-on

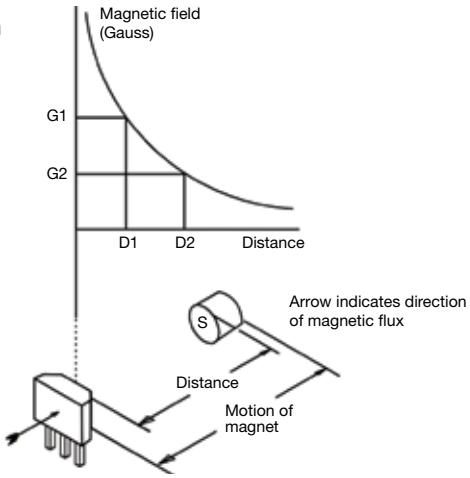

SLIDE-BY ACTUATION

For “slide-by” actuation, the magnet should pass the sensing surface at a distance which provides at least 10 % flux overdrive above maximum operate. The target is moved across the face of the sensor at a specified distance.

Figure 22. Unipolar Slide-by (One magnet)

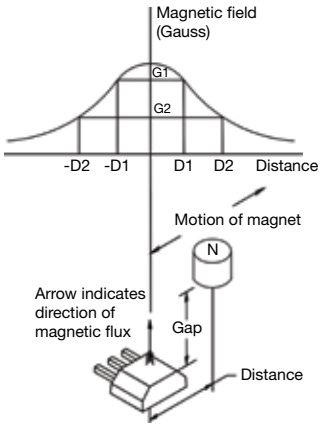

Figure 23. Bipolar Slide-by (One magnet)

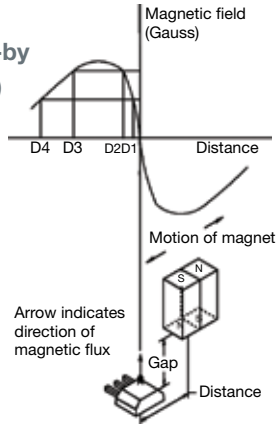

Figure 24. Bipolar Slide-by (Two magnets)

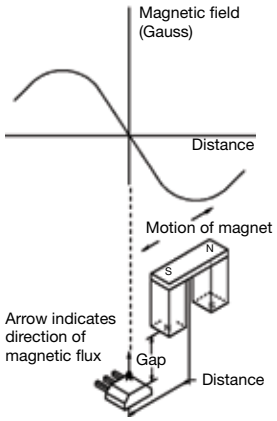

Figure 25. Bipolar Slide-by (Three magnets)

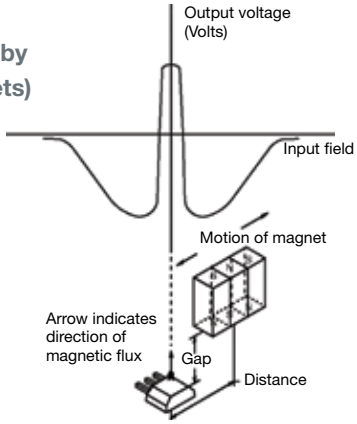

MG Series Magnets

MAGNET CONVERSION CHART

Table 1. Multiplication Factors

From / To	Gauss	Tesla	Millitesla	Weber/Inch^2	Weber/Meter^2	Line/Inch^2	Gammas
Gauss	1.0	1.0×10^{4}	10	1.55×10^{7}	1.0×10^{4}	1.55×10^{7}	1.0×10^{-5}
Tesla	1.0×10^{-4}	1.0	1.0×10^{-3}	1.55×10^{3}	1.0	1.55×10^{3}	1.0×10^{-9}
Millitesla	0.1	1.0×10^{3}	1.0	1.55×10^{-4}	1.0×10^{3}	1.55×10^{6}	1.0×10^{-6}
Weber/Inch^2	6.4516×10^{-5}	6.4516×10^{-4}	6.4516×10^{-2}	1.0	6.4516×10^{6}	1.0	6.4516×10^{-13}
Weber/Meter^2	1.0×10^{-4}	1.0	1.0×10^{-3}	1.55×10^{3}	1.0	1.55×10^{3}	1.0×10^{-9}
Line/Inch^2	6.4516×10^{-5}	6.4516×10^{-4}	6.4516×10^{-2}	1.0	6.4516×10^{6}	1.0	6.4516×10^{-13}
Gammas	1.0×10^{6}	1.0×10^{9}	1.0×10^{6}	1.55×10^{12}	1.0×10^{9}	1.55×10^{12}	1.0

Table 2. Various Magnetic Materials

Magnetic Material	(B_DH_D) – Peak Energy Product	(B_R) – Residual Induction Gauss	(H_C) – Coercive Force Oersteds
Alnico V	5.5×10^{6}	12800	640
Alnico VIII	6.0×10^{6}	9200	1550
Rare Earth (SmCo magnet)	18.0×10^{6}	8600	8000

DIMENSIONAL DRAWINGS (FOR REFERENCE ONLY)

Figure 26. Alnico VI Sintered – 101MG2L1

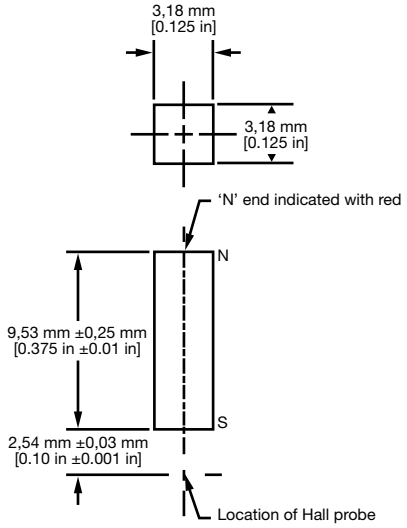

Figure 27. Alnico V Cast – 101MG3

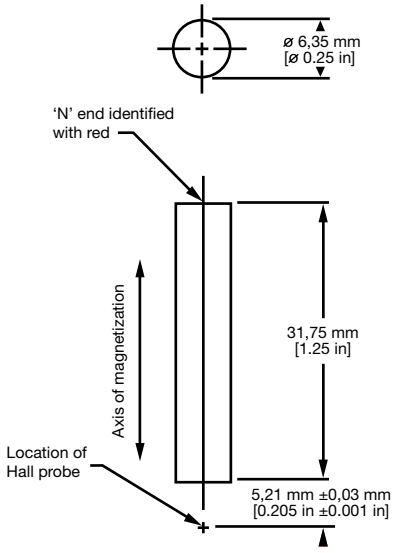

Figure 28. Alnico VIII Sintered – 101MG7

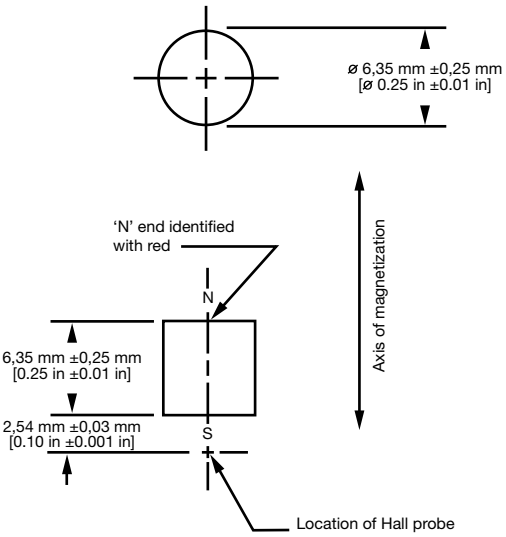

Figure 29. Alnico VIII Sintered – 101MG8

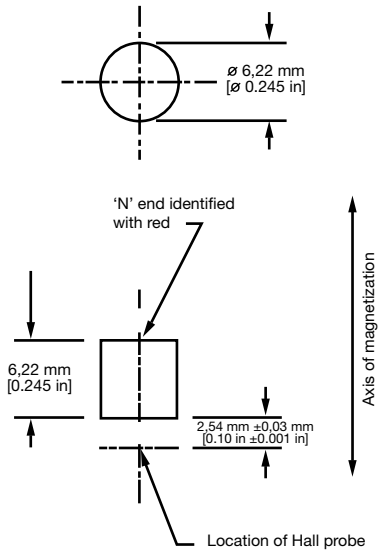

Figure 30. Alnico VIII Sintered – 102MG11

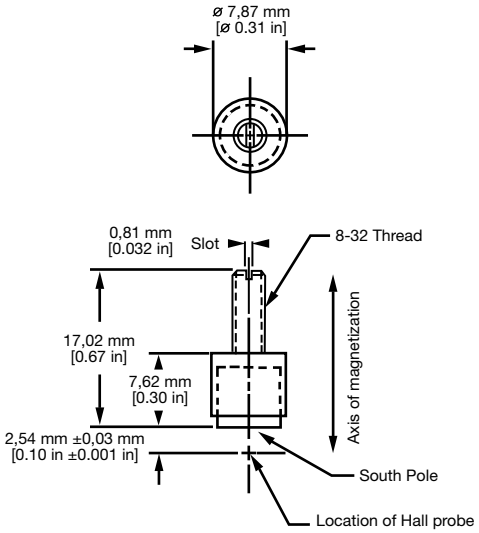

Figure 31. Alnico VIII Sintered – 102MG15

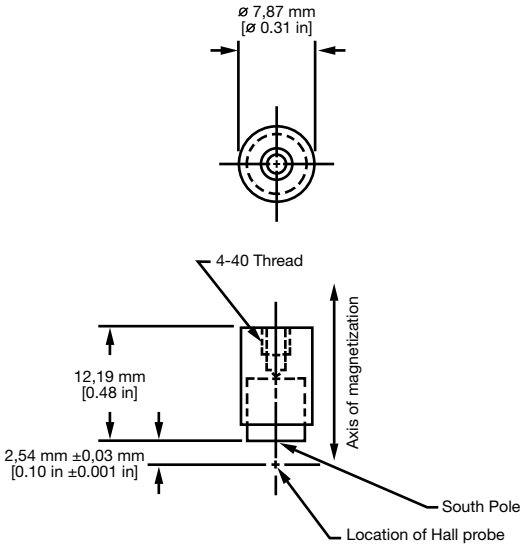

Figure 32. Rare Earth Pressed – 103MG5

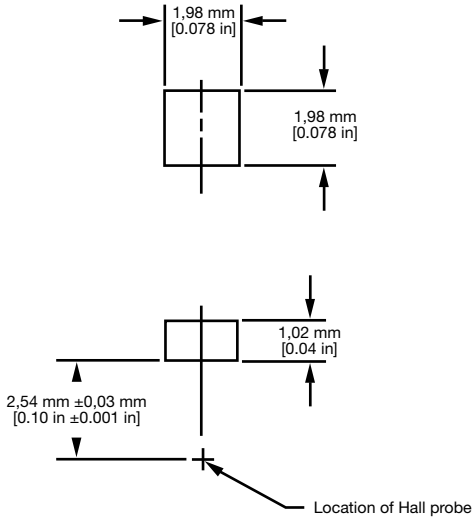

Figure 33. Rare Earth Pressed – 103MG8

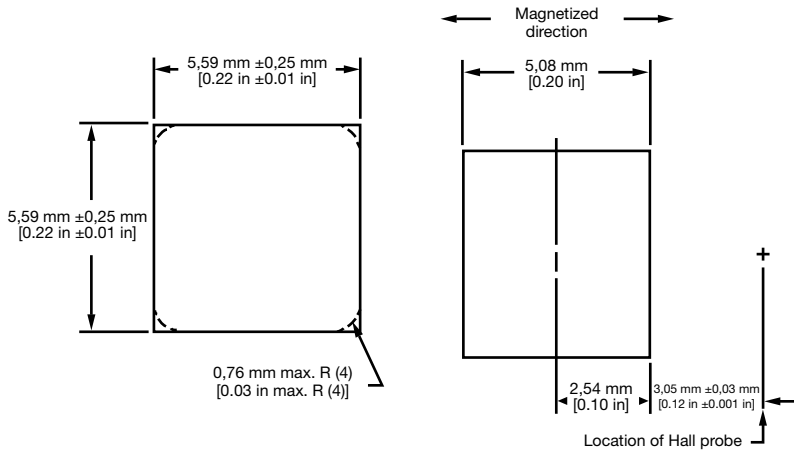

Figure 34. Rare Earth Pressed – 104MG1

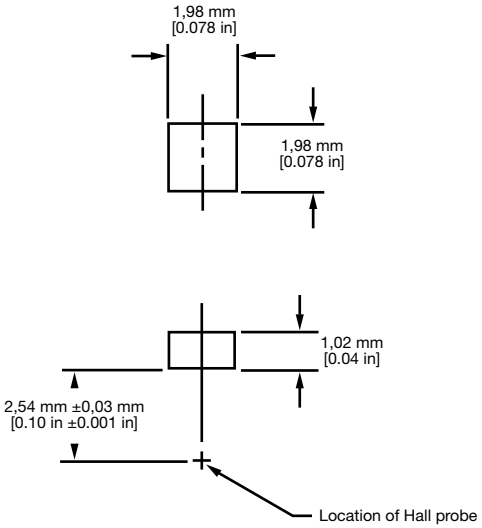

Figure 35. Rare Earth Pressed – 104MG2

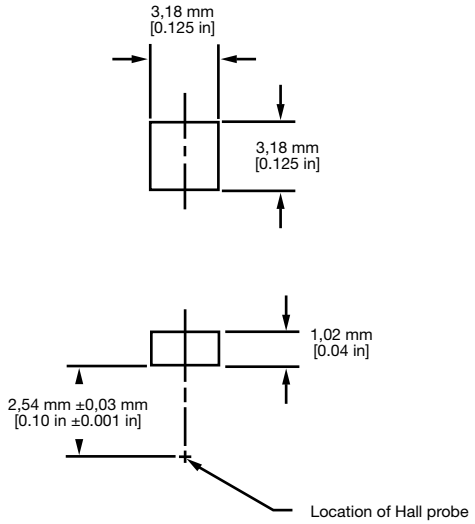

Figure 36. Rare Earth Pressed – 104MG3

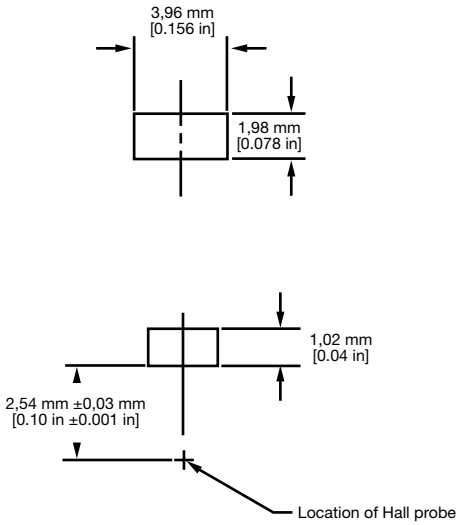

Figure 37. Rare Earth Pressed – 106MG10

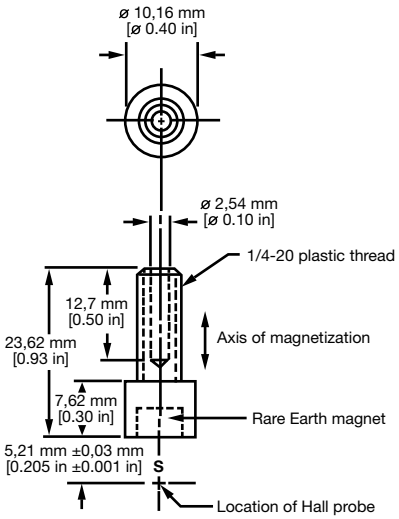

Figure 38. Alnico VIII Sintered – 107MG1

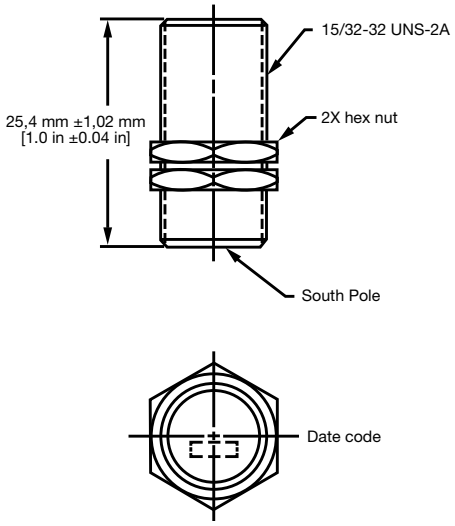

MG Series

MAGNET SELECTION GUIDE

The below guide is designed to aid in determining the best magnet for use with a Hall-effect or magnetoresistive sensor. There are several factors to consider when choosing a magnet. The most important is gap distance. There must be a strong enough magnetic Gauss level to operate the sensor at the correct distance. By using the maximum operate magnetic Gauss characteristics, you can determine which magnet will operate the sensor. The other important factors include temperature and physical environment of the application. The Gauss levels below are typical values only and not guaranteed rated specifications.

Table 3. Magnet Selection Guide

Catalog Listing	Material and Process	Physical Strength	Temperature Range*	Magnetic Shock Resistance	Resistance to Demagnetization	Gap Distance mm [in]** and Gauss Level (G) @ 25 °C [77 °F] †					
						0,25 mm [0.01 in]	0,76 mm [0.03 in]	1,27 mm [0.05 in]	2,54 mm [0.10 in]	3,81 mm [0.15 in]	5,08 mm [0.20 in]
101MG2L1	Alnico VI Sintered	Good	-40 °C to 250 °C -40 °F to 482 °F	Good	Good	730	550	410	205	115	75
101MG3	Alnico V Cast	Good	-40 °C to 300 °C -40 °F to 572 °F	Poor	Fair	1460	1320	1170	810	575	420
101MG7	Alnico VIII Sintered	Good	-40 °C to 250 °C -40 °F to 482 °F	Good	Excellent	1050	900	755	470	295	195
101MG8	Alnico VIII Sintered	Good	-40 °C to 250 °C -40 °F to 482 °F	Good	Excellent	1050	900	755	470	295	195
102MG11	Alnico VIII Sintered	Good	-40 °C to 140 °C -40 °F to 284 °F	Good	Excellent	1050	900	755	470	295	195
102MG15	Alnico VIII Sintered	Good	-40 °C to 140 °C -40 °F to 284 °F	Good	Excellent	1050	900	755	470	295	195
103MG5	Rare Earth Pressed	Poor	-40 °C to 200 °C -40 °F to 392 °F	Good	Excellent	1110	630	365	120	55	25
103MG8	Rare Earth Pressed	Poor	-40 °C to 200 °C -40 °F to 392 °F	Good	Excellent	2620	2100	1600	940	550	350
104MG1	Rare Earth Pressed	Poor	-40 °C to 150 °C -40 °F to 302 °F	Good	Excellent	1110	630	365	120	55	25
104MG2	Rare Earth Pressed	Poor	-40 °C to 150 °C -40 °F to 302 °F	Good	Excellent	2500	1600	1000	370	140	70
104MG3	Rare Earth Pressed	Poor	-40 °C to 150 °C -40 °F to 302 °F	Good	Excellent	2350	1400	800	280	100	50
106MG10	Rare Earth Pressed	Poor	-40 °C to 150 °C -40 °F to 302 °F	Good	Excellent	2620	2100	1600	940	550	350
107MG1***	Alnico VIII Sintered	Good	-40 °C to 140 °C -40 °F to 284 °F	Good	Excellent	7800	7800	7800	750	550	375

*Magnet exibits good stability over indicated temperature range

**Gap distance from sensing surface

***Measurement device saturated @ 800 Gauss

†Millitesla = Gauss × 10^{-1}

MG Series Magnets

Order Guide (Measurements for reference only)

	Catalog Listing	Material and Process	Dimension	Description
	101MG2L1	Alnico VI Sintered	9,53 mm L x 3,18 mm W x 3,18 mm H [0.375 in L x 0.125 in W x 0.125 in H]	Bar magnet; North Pole is indicated with red
	101MG3	Alnico V Cast	31,75 mm L x 6,35 mm dia [1.25 in L x 0.25 in dia]	Cylindrical magnet; North Pole is indicated with red
	101MG7	Alnico VIII Sintered	6,35 mm L x 6,35 mm dia [0.25 in L x 0.25 in dia]	Cylindrical magnet; North Pole is indicated with red
	101MG7-BP	Alnico VIII Sintered	6,35 mm L x 6,35 mm dia [0.25 in L x 0.25 in dia]	Cylindrical magnet; North Pole is indicated with red; bulk packaging in 100 unit lots
	101MG8-BP	Alnico VIII Sintered	6,22 mm L x 6,22 mm dia [0.245 in L x 0.245 in dia]	Cylindrical magnet; North Pole is indicated with red; bulk packaging in 100 unit lots
	102MG11	Alnico VIII Sintered	17,02 mm L x 7,87 mm dia [0.67 in L x 0.31 in dia]	Magnet with 8 x 32 threaded shaft for easy installation
	102MG11-BP	Alnico VIII Sintered	17,02 mm L x 7,87 mm dia [0.67 in L x 0.31 in dia]	Magnet with 8 x 32 threaded shaft for easy installation; bulk packaging in 100 unit lots
	102MG15	Alnico VIII Sintered	12,19 mm L x 7,87 mm dia [0.48 in L x 0.31 in dia]	Magnet with 4-40 threaded shaft for easy installation
	102MG15-BP	Alnico VIII Sintered	12,19 mm L x 7,87 mm dia [0.48 in L x 0.31 in dia]	Magnet with 4-40 threaded shaft for easy installation; bulk packaging in 100 unit lots
	103MG5	Rare Earth Pressed	1,98 mm L x 1,98 mm W x 1,02 mm H [0.078 in L x 0.078 in W x 0.04 in H]	Square magnet; 125 pieces per tube

•BP - Bulk Pack

MG Series

Order Guide (Measurements for reference only)

	Catalog Listing	Material and Process	Dimension	Description
	103MG8	Rare Earth Pressed	5,59 mm L x 5,08 mm W x 5,59 mm H [0.22 in W x 0.20 in W x 0.22 in H]	Bar magnet
	104MG1	Rare Earth Pressed	1,98 mm L x 1,02 mm W x 1,98 mm H [0.078 in L x 0.04 in W x 0.078 in H]	Bar magnet, magnetized and conditioned for operation; tube is marked with a red dot indicating North Pole; 125 pieces per tube
	104MG2	Rare Earth Pressed	3,18 mm L x 1,02 mm W x 3,18 mm H [0.125 in L x 0.04 in W x 0.125 in H]	Bar magnet; 125 pieces per tube
	104MG3	Rare Earth Pressed	3,96 mm L x 1,02 mm W x 1,98 mm H [0.156 in L x 0.04 in W x 0.078 in H]	Bar magnet, magnetized and conditioned for operation; 125 pieces per tube
	106MG10	Rare Earth Pressed	23,62 mm L x 10,16 mm dia [0.93 in L x 0.4 in dia]	Magnet in threaded plastic holder; 1/4-20 thread for easy installation
	106MG10-BP	Rare Earth Pressed	23,62 mm L x 10,16 mm dia [0.93 in L x 0.4 in dia]	Magnet in threaded plastic holder; 1/4-20 thread for easy installation; bulk packaging in 100 unit lots
	107MG1	Alnico VIII Sintered	25,4 mm L x 0,47 mm dia [1.00 in L x 15/32-32 UNS-2A dia]	Magnet in epoxy filled 15/32-32 UNS-2A aluminum package; 2 hex nuts; 1 per box

•BP - Bulk Pack

MG Series Magnets

⚠WARNING
PERSONAL INJURY

DO NOT USE these products as safety or emergency stop devices or in any other application where failure of the product could result in personal injury.
Failure to comply with these instructions could result in death or serious injury.

⚠WARNING
MISUSE OF DOCUMENTATION

- The information presented in this product sheet is for reference only. Do not use this document as a product installation guide.
- Complete installation, operation, and maintenance information is provided in the instructions supplied with each product.

Failure to comply with these instructions could result in death or serious injury.

WARRANTY/REMEDY

Honeywell warrants goods of its manufacture as being free of defective materials and faulty workmanship. Honeywell's standard product warranty applies unless agreed to otherwise by Honeywell in writing; please refer to your order acknowledgement or consult your local sales office for specific warranty details. If warranted goods are returned to Honeywell during the period of coverage, Honeywell will repair or replace, at its option, without charge those items it finds defective. **The foregoing is buyer's sole remedy and is in lieu of all other warranties, expressed or implied, including those of merchantability and fitness for a particular purpose. In no event shall Honeywell be liable for consequential, special, or indirect damages.**

While we provide application assistance personally, through our literature and the Honeywell website, it is up to the customer to determine the suitability of the product in the application.

Specifications may change without notice. The information we supply is believed to be accurate and reliable as of this printing. However, we assume no responsibility for its use.

Find out more
Honeywell serves its customers through a worldwide network of sales offices, representatives and distributors. For application assistance, current specifications, pricing or name of the nearest Authorized Distributor, contact your local sales office.

To learn more about Honeywell's sensing and control products, call **+1-815-235-6847 or 1-800-537-6945,** visit **sensing.honeywell.com,** or email inquiries to **info.sc@honeywell.com**

Sensing and Control
Honeywell
1985 Douglas Drive North
Golden Valley, MN 55422
honeywell.com

005972-1-EN IL50 GLO
June 2014
Copyright 2014 Honeywell International Inc. All rights reserved.

LifeElectronics
Живое партнерство

ООО «ЛайфЭлектроникс» **“LifeElectronics” LLC**

ИНН 7805602321 КПП 780501001 Р/С 40702810122510004610 ФАКБ "АБСОЛЮТ БАНК" (ЗАО) в г.Санкт-Петербурге К/С 30101810900000000703 БИК 044030703

Компания «Life Electronics» занимается поставками электронных компонентов импортного и отечественного производства от производителей и со складов крупных дистрибьюторов Европы, Америки и Азии.

С конца 2013 года компания активно расширяет линейку поставок компонентов по направлению коаксиальный кабель, кварцевые генераторы и конденсаторы (керамические, пленочные, электролитические), за счёт заключения дистрибьюторских договоров

Мы предлагаем:

- *Конкурентоспособные цены и скидки постоянным клиентам.*
- *Специальные условия для постоянных клиентов.*
- *Подбор аналогов.*
- *Поставку компонентов в любых объемах, удовлетворяющих вашим потребностям.*

- *Приемлемые сроки поставки, возможна ускоренная поставка.*
- *Доставку товара в любую точку России и стран СНГ.*
- *Комплексную поставку.*
- *Работу по проектам и поставку образцов.*
- *Формирование склада под заказчика.*

- *Сертификаты соответствия на поставляемую продукцию (по желанию клиента).*
- *Тестирование поставляемой продукции.*
- *Поставку компонентов, требующих военную и космическую приемку.*
- *Входной контроль качества.*
- *Наличие сертификата ISO.*

В составе нашей компании организован Конструкторский отдел, призванный помогать разработчикам, и инженерам.

Конструкторский отдел помогает осуществить:

- *Регистрацию проекта у производителя компонентов.*
- *Техническую поддержку проекта.*
- *Защиту от снятия компонента с производства.*
- *Оценку стоимости проекта по компонентам.*
- *Изготовление тестовой платы монтаж и пусконаладочные работы.*

Тел: +7 (812) 336 43 04 (многоканальный)
Email: org@lifeelectronics.ru

www.lifeelectronics.ru