AY0438

32-Segment CMOS LCD Driver

FEATURES

- Drives up to 32 LCD segments of arbitrary configuration
- CMOS process for: wide supply voltage range, low- power operation, high-noise immunity, wide temperature range
- CMOS and TTL-compatible inputs
- Electrostatic discharge protection on all pins
- Cascadable
- On-chip oscillator
- Requires only three control lines

APPLICATIONS

- Industrial displays
- Consumer product displays
- Telecom product displays
- Automotive dashboard displays

DESCRIPTION

The AY0438 is a CMOS integrated device that drives a liquid crystal display, usually under microprocessor control. The part acts as a smart peripheral that drives up to 32 LCD segments. It needs only three control lines due to its serial input construction. It latches the data to be displayed and relieves the microprocessor from the task of generating the required waveforms.

The AY0438 can drive any standard or custom parallel drive LCD display, whether it be field effect or dynamic scattering; 7-, 9-, 14- or 16-segment characters; decimals; leading + or -; or special symbols. Several AY0438 devices can be cascaded. The AC frequency of the LCD waveforms can either be supplied by the user or generated by attaching a capacitor to the LCD input, which controls the frequency of an internal oscillator.

The AY0438 is available in 40-lead dual in-line plastic and 44-lead PLCC packages. Unpackaged dice are also available.

PIN CONFIGURATION

40-Lead Dual In-line

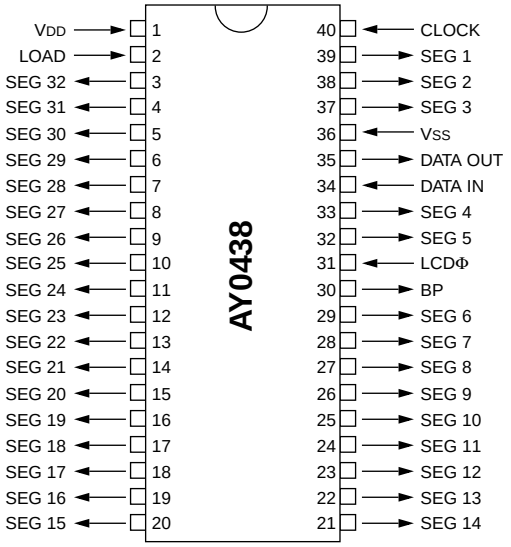

44 PLCC

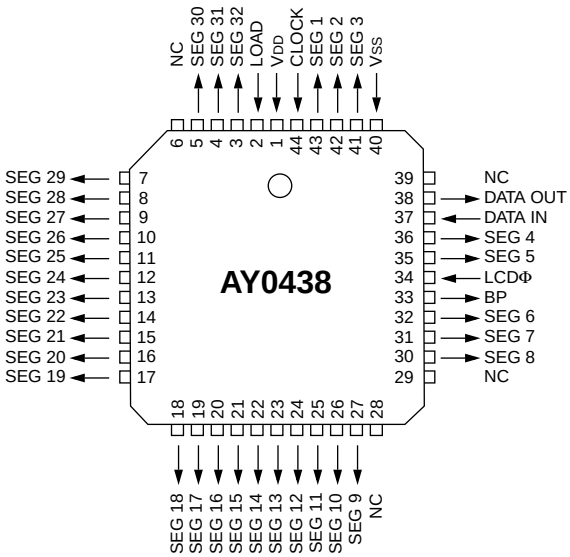

© 1995 Microchip Technology Inc.

FIGURE 1: PIN DESCRIPTIONS

Pin # (PDIP Only)	Name	Direction	Description
1	VDD	-	Supply voltage
2	Load	Input	Latch data from registers
3-29, 32, 33, 37-39	Seg 1-32	Output	Direct drive outputs
30	BP	Output	Backplane drive output
31	LCDΦ	Input	Backplane drive input
34	Data In	Input	Data input to shift register
35	Data Out	Output	Data output from shift register
36	VSS	Ground	Ground
40	Clock	Input	System clock input

FIGURE 2: BLOCK DIAGRAM

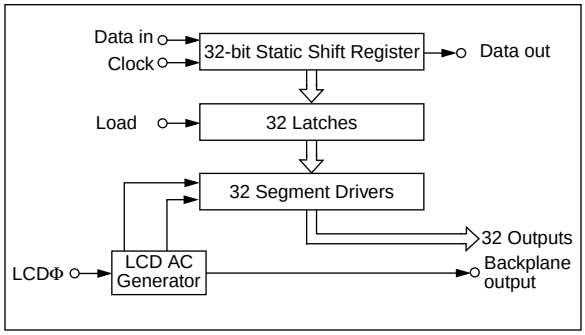

FIGURE 3: BACKPLANE AND SEGMENT OUTPUT

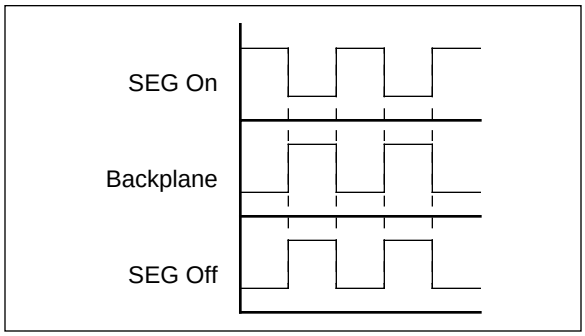

FIGURE 4: TIMING DIAGRAM

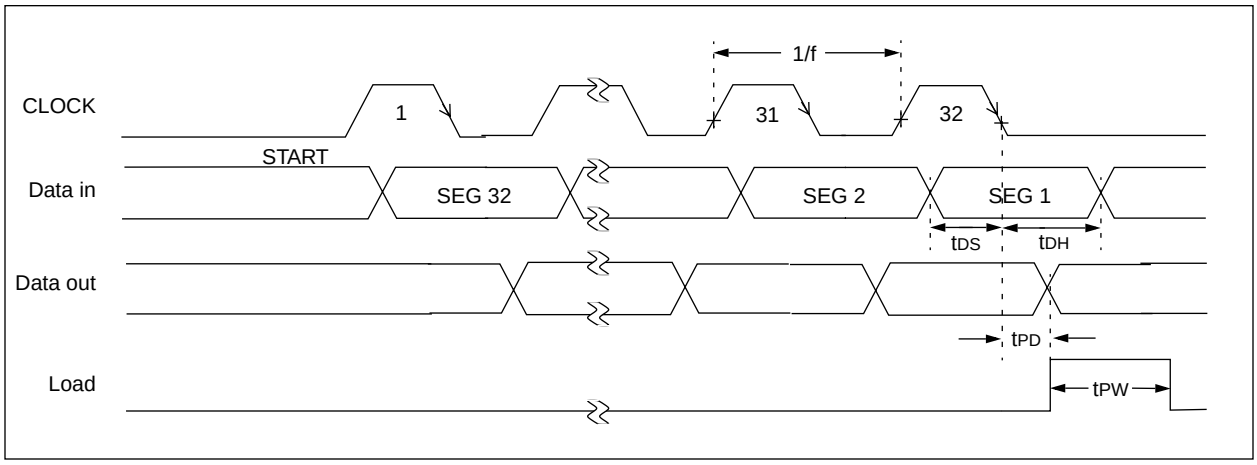

1.0 OPERATION:

1.1 Data In and Clock

The shift register shifts and outputs on the falling edge of the clock. Every clock falling edge does a logical left shift. As an example, if 32 clock pulses are supplied as in Figure 4, then the data input at the first clock will output at SEG 32, and the last data input (# 32) will output at SEG 1 when a LOAD signal is enabled (Figure 2). It is recommended that a complete 32 bit transfer be done every time the outputs are updated. A logic 1 at the Data In causes the corresponding segment to be enabled or visible, i.e. the output at Segment Output is 180° out-of-phase with the Backplane output (Figure 3).

1.2 Load

A logic 1 at the Load input (Figure 2) causes the parallel load of the data in the shift register into the latches that control the segment drivers. If the Load signal is tied high, then the latches become transparent and the segment drivers are always connected to the shift registers.

© 1995 Microchip Technology Inc.

1.3 LCDϕ

LCDϕ can be driven by an external signal or by connecting a capacitor between LCDϕ and ground (GND), which will enable the on-chip oscillator required to generate the backplane output voltage. Figure 5 shows the relationship between capacitance value and output frequency. Leaving the LCDϕ input unconnected is not recommended. When driven by an external clock, the backplane output is in phase with the input clock. When cascading two AY0438 devices (Figure 6 and Figure 7), the backplane output can be generated using a capacitor to GND on the first AY0438. This backplane output can then be connected to the LCDϕ input of the second AY0438. The backplane output of the second device is then used to drive the backplane of the LCD module.

FIGURE 5: OSCILLATOR FREQUENCY GRAPH (TYPICAL @ 25°C)

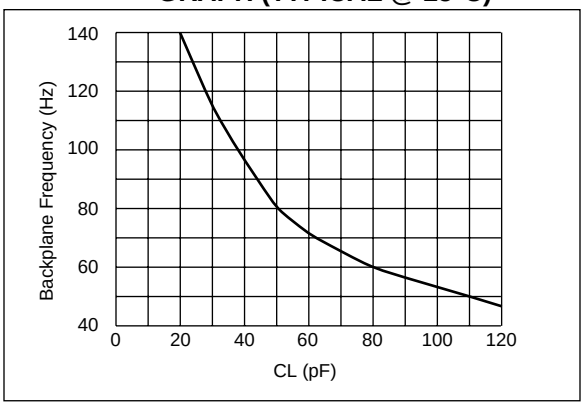

FIGURE 6: CASCADING TWO AY0438 DEVICES

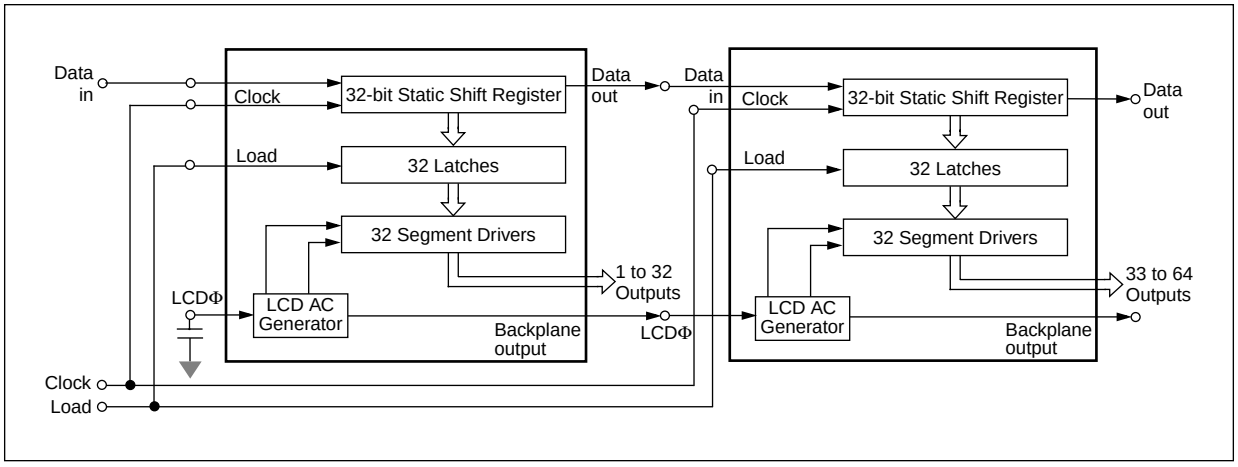

FIGURE 7: CASCADE TIMING DIAGRAM

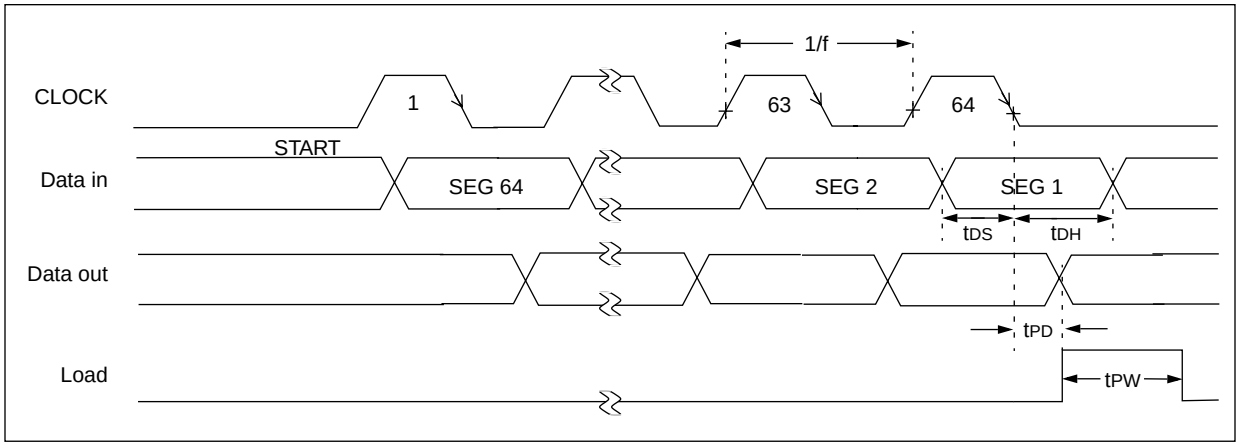

1.4 General

In order to avoid any race conditions, the Data In and Load signals should not be changed during a falling edge of the Clock. Figure 4 and Figure 7 show a typical timing diagram for a 32 segment and 64 segment LCD module.

1.5 Interfacing to a LCD Module and PIC16CXX Device

Figure 8 shows a typical layout of an AY0438 connected to a LCD module and interfaced to a PIC16CXX family device. Example 1 lists code used to program the PIC16CXX device. This code was complied using MPASM.

FIGURE 8: INTERFACING TO A LCD MODULE AND PIC16CXX DEVICE

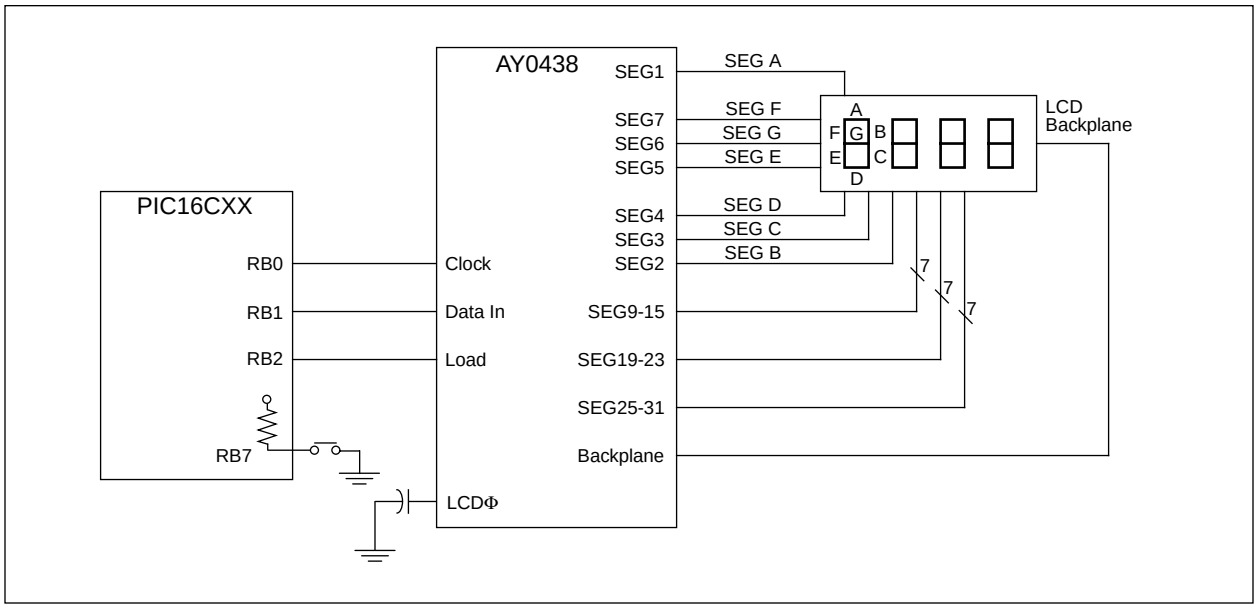

EXAMPLE 1: EXAMPLE CODE

```
;*************************************************************************
;This program shows an interface between a PIC16CXX device
;and the AY0438 LCD controller to control a 7 Segment
;4 digit LCD module.
;The PIC16CXX interface to the AY0438 Hardware:
;
;       PORTB bit 0 --> CLK
;       PORTB bit 1 --> DATA IN
;       PORTB bit 2 --> LOAD
;
;The LCD module is connected to the AY0438 as follows:
;       Most Significant digit  --> seg1 to seg7
;       3rd Significant digit   --> seg9 to seg15
;       2nd Significant digit   --> seg17 to seg 23
;       Least Significant digit --> seg25 to seg 31
;
```


© 1995 Microchip Technology Inc.

```
;The DP are not connected, but can be connected to seg8, 16, 24 & 32.
;For each digit, the segments are connected as:
;       Seg A --> seg(8*n + 1)
;       Seg B --> seg(8*n + 2)
;       Seg C --> seg(8*n + 3)
;       Seg D --> seg(8*n + 4)
;       Seg E --> seg(8*n + 5)
;       Seg F --> seg(8*n + 6)
;       Seg G --> seg(8*n + 7)
;where n = 0, 1, 2 and 3 for MSD, 3rdSD, 2ndSD and LSD respectively.
;The firmware uses the values in registers:
;       MSD, THRDSD, SCNDSD and LSD   to determine the values to be
;pulsed to the AY0438.
;In this example, a pushbutton connected to PORTB bit 7
;is checked periodically to see if it has been pressed. If so,
;the LCD values in locations MSD to LSD are updated.
;*********************************************************************
        list p=16c71,f=inhx8m
;
;
MSD     equ     0x20
THRDSD  equ     0x21
SCNDSD  equ     0x22
LSD     equ     0x23
count   equ     0x24
temp    equ     0x25
PORTB   equ     0x06
#define CLK     PORTB,0
#define DATAIN  PORTB,1
#define LOAD    PORTB,2
#define UPDATELCD PORTB,7
w       equ     0
STATUS  equ     0x03
C       equ     0
RP0     equ     5
OPTION  equ     0x81
RBPU    equ     7
PCL     equ     0x02
PCLATH  equ     0x0A
;
;
        org     0
        goto    start
        org     0x10
;
;This DecodeValue table must reside in page 0 for this program to work
;
DecodeValue
        addwf   PCL
        retlw   B'00111111'     ;decode for 0
        retlw   B'00000110'     ;decode for 1
        retlw   B'01011011'     ;decode for 2
        retlw   B'01001111'     ;decode for 3
        retlw   B'01100110'     ;decode for 4
        retlw   B'01101101'     ;decode for 5
```

```
        retlw   B'01111101'     ;decode for 6
        retlw   B'00000111'     ;decode for 7
        retlw   B'01111111'     ;decode for 8
        retlw   B'01101111'     ;decode for 9
;
;
start
        clrf    PORTB
        bsf     STATUS,RP0      ;set portb 0,1&2 as outputs
        movlw   B'11111000'     ;       /
        movwf   PORTB           ;       /
        bcf     OPTION,RBPU     ;enable pull-up for switch
        bcf     STATUS,RP0
wait
        btfsc   UPDATELCD       ;see if update switch is low
        goto    wait            ;no then wait
        bcf     LOAD            ;make sure load is disabled
        movf    LSD,w           ;get least significant value
        clrf    PCLATH          ;PCH = 0
        call    DecodeValue     ;decode the value
        call    Send8           ;serially output the seg values
        movf    SCNDSD,w        ;get 2nd significant digit
        call    DecodeValue     ;decode it
        call    Send8           ;serially output it
        movf    THRDSD,w        ;get 3rd significant digit
        call    DecodeValue     ;decode it
        call    Send8
        movf    MSD,w           ;get Most significant value
        call    DecodeValue     ;decode it
        call    Send8           ;serially send it
        bsf     LOAD            ;toggle the LOAD line
        bcf     LOAD            ;to enable the latches
KeyReleased
        btfss   UPDATELCD       ;wait for key to be released
        goto    KeyReleased
        goto    wait            ;repeat loop.
;
;Send8, sends the 8 bits in the W register
Send8
        movwf   temp            ;save in temp
        movlw   .8              ;init count
        movwf   count           ;to 8
sendloop
        bcf     DATAIN          ;make sure DATAIN is low
        rrf     temp            ;rotate value through carry
        btfsc   STATUS,C        ;if bit clear then skip
        bsf     DATAIN          ;else set data bit
        bsf     CLK             ;toggle clock
        bcf     CLK             ;       /
        decfsz  count           ;see if 8 done
        goto    sendloop        ;no then do all
        return                  ;else return

        end
```


© 1995 Microchip Technology Inc.

2.0 ELECTRICAL CHARACTERISTICS

Maximum Ratings*

V_{DD} ..... -0.3V to +12V

Inputs (CLK, Data In, Load) ..... V_{CC} to V_{DD} +0.3V

LCDΦ Input ..... -0.3V to V_{DD} +0.3V

Power Dissipation ..... 250 mW

Storage Temperature ..... -65˚C to +125˚C

Operating Temperature Industrial ..... -40˚C to +85˚C

* Exceeding these ratings could cause permanent damage to the device. This is a stress rating only and functional operation of this device at these conditions is not implied. Operating ranges are specified in Standard Conditions. Exposure to absolute maximum rating conditions for extended periods may affect device reliability.

Data labeled “typical” is presented for design guidance only and is not guaranteed.

TABLE 2: DC CHARACTERISTICS

V_{DD} = +5V unless otherwise noted, T_A = 40°C to +85°C							
Characteristics		**Sym**	**Min**	**Typ**	**Max**	**Units**	**Conditions**
Supply Voltage		V_{DD}	+3.0	—	+8.5	V	
Supply Current		I_{DD}	—	25	60	μA	LCDΦ OSC < 15 kHz
			—	13	30	μA	LCDΦ OSC < 100 Hz
Input High Level		V_{IH}	0.5 V_{DD}	—	V_{DD}	V	
Input Low Level	Clock	$V_{IL}1$	0	—	0.1 V_{DD}	V	3.0V ≤ V_{DD} ≤ 8.5V
	Data,	$V_{IL}2$	0	—	0.1 V_{DD}	V	3.0V ≤ V_{DD} ≤ 8.5V
Input Leakage Current	Load	I_L	—	0.01	±10	μA	V_{IN} = 0V and +5.0V
Input Capacitance		C_I	—	—	5.0	pF	V_{DD} = +5.0V
Segment Output Voltage		V_{OH}	0.8 V_{DD}	—	V_{DD}	V	I_{OH} = -100 μA
		V_{OL}	0	—	0.1 V_{DD}	V	I_{OL} = 100 μA
LCDΦ Input High Level		V_{IN}	0.9 V_{DD}	—	V_{DD}	V	
LCDΦ Input Low Level		V_{IL}	0	—	0.1 V_{DD}	V	
LCDΦ Input Leakage		I_L	—	—	10	μA	V_{IN} = 0V and +5.0V
							V_{DD} = +5.0V

TABLE 3: AC CHARACTERISTICS

Characteristics	Sym	Min	Typ	Max	Units	Conditions
Clock Rate	f	DC	—	1.5	MHz	50% duty cycle
Data Set-up Time	t_{DS}	150	—	—	nsec	Data change to Clk falling edge
Data Hold Time	t_{DH}	50	—	—	nsec	
Load Pulse Width	t_{PW}	175	—	—	nsec	
Data Out Prop. Delay	t_{PD}	—	—	500	nsec	C_L = 55 pF

© 1995 Microchip Technology Inc.

NOTES:

© 1995 Microchip Technology Inc.

AY0438 Product Identification System

To order or to obtain information, e.g., on pricing or delivery, please use the listed part numbers, and refer to the factory or the listed sales offices.

PART NO. **X** **/XX**

Package:	P	=	Plastic DIP
	L	=	PLCC
	S	=	Die in Waffle Pack
Temperature Range:	-	=	0˚C to +70˚C
	I	=	40˚C to +85˚C
Device:	32 Segment LCD Driver		

Sales and Support

Products supported by a preliminary Data Sheet may possibly have an errata sheet describing minor operational differences and recommended workarounds. To determine if an errata sheet exists for a particular device, please contact one of the following:

1. Your local Microchip sales office.
2. The Microchip Corporate Literature Center U.S. FAX: (602) 786-7277
3. The Microchip's Bulletin Board, via your local CompuServe number (CompuServe membership NOT required).

Please specify which device, revision of silicon and Data Sheet (include Literature #) you are using.

For latest version information and upgrade kits for Microchip Development Tools, please call 1-800-755-2345 or 1-602-786-7302.

© 1995 Microchip Technology Inc.

Note the following details of the code protection feature on PICmicro® MCUs.

- The PICmicro family meets the specifications contained in the Microchip Data Sheet.
- Microchip believes that its family of PICmicro microcontrollers is one of the most secure products of its kind on the market today, when used in the intended manner and under normal conditions.
- There are dishonest and possibly illegal methods used to breach the code protection feature. All of these methods, to our knowledge, require using the PICmicro microcontroller in a manner outside the operating specifications contained in the data sheet. The person doing so may be engaged in theft of intellectual property.
- Microchip is willing to work with the customer who is concerned about the integrity of their code.
- Neither Microchip nor any other semiconductor manufacturer can guarantee the security of their code. Code protection does not mean that we are guaranteeing the product as “unbreakable”.
- Code protection is constantly evolving. We at Microchip are committed to continuously improving the code protection features of our product.

If you have any further questions about this matter, please contact the local sales office nearest to you.

Information contained in this publication regarding device applications and the like is intended through suggestion only and may be superseded by updates. It is your responsibility to ensure that your application meets with your specifications. No representation or warranty is given and no liability is assumed by Microchip Technology Incorporated with respect to the accuracy or use of such information, or infringement of patents or other intellectual property rights arising from such use or otherwise. Use of Microchip’s products as critical components in life support systems is not authorized except with express written approval by Microchip. No licenses are conveyed, implicitly or otherwise, under any intellectual property rights.

Trademarks

The Microchip name and logo, the Microchip logo, FilterLab, KEELOQ, microID, MPLAB, PIC, PICmicro, PICMASTER, PICSTART, PRO MATE, SEEVAL and The Embedded Control Solutions Company are registered trademarks of Microchip Technology Incorporated in the U.S.A. and other countries.

dsPIC, ECONOMONITOR, FanSense, FlexROM, fuzzyLAB, In-Circuit Serial Programming, ICSP, ICEPIC, microPort, Migratable Memory, MPASM, MPLIB, MPLINK, MPSIM, MXDEV, PICC, PICDEM, PICDEM.net, rfPIC, Select Mode and Total Endurance are trademarks of Microchip Technology Incorporated in the U.S.A.

Serialized Quick Turn Programming (SQTP) is a service mark of Microchip Technology Incorporated in the U.S.A.

All other trademarks mentioned herein are property of their respective companies.

© 2002, Microchip Technology Incorporated, Printed in the U.S.A., All Rights Reserved.

Printed on recycled paper.

DNV Certification, Inc. USA
ANSI • RAB QMS ACCREDITED
DNV MSC The Netherlands Accredited by the RvA
DNV
ISO 9001 / QS-9000 REGISTERED FIRM

Microchip received QS-9000 quality system certification for its worldwide headquarters, design and wafer fabrication facilities in Chandler and Tempe, Arizona in July 1999. The Company’s quality system processes and procedures are QS-9000 compliant for its PICmicro® 8-bit MCUs, KEELOQ® code hopping devices, Serial EEPROMs and microperipheral products. In addition, Microchip’s quality system for the design and manufacture of development systems is ISO 9001 certified.

WORLDWIDE SALES AND SERVICE

AMERICAS

Corporate Office
2355 West Chandler Blvd.
Chandler, AZ 85224-6199
Tel: 480-792-7200 Fax: 480-792-7277
Technical Support: 480-792-7627
Web Address: http://www.microchip.com

Rocky Mountain
2355 West Chandler Blvd.
Chandler, AZ 85224-6199
Tel: 480-792-7966 Fax: 480-792-7456

Atlanta
500 Sugar Mill Road, Suite 200B
Atlanta, GA 30350
Tel: 770-640-0034 Fax: 770-640-0307

Boston
2 Lan Drive, Suite 120
Westford, MA 01886
Tel: 978-692-3848 Fax: 978-692-3821

Chicago
333 Pierce Road, Suite 180
Itasca, IL 60143
Tel: 630-285-0071 Fax: 630-285-0075

Dallas
4570 Westgrove Drive, Suite 160
Addison, TX 75001
Tel: 972-818-7423 Fax: 972-818-2924

Detroit
Tri-Atria Office Building
32255 Northwestern Highway, Suite 190
Farmington Hills, MI 48334
Tel: 248-538-2250 Fax: 248-538-2260

Kokomo
2767 S. Albright Road
Kokomo, Indiana 46902
Tel: 765-864-8360 Fax: 765-864-8387

Los Angeles
18201 Von Karman, Suite 1090
Irvine, CA 92612
Tel: 949-263-1888 Fax: 949-263-1338

New York
150 Motor Parkway, Suite 202
Hauppauge, NY 11788
Tel: 631-273-5305 Fax: 631-273-5335

San Jose
Microchip Technology Inc.
2107 North First Street, Suite 590
San Jose, CA 95131
Tel: 408-436-7950 Fax: 408-436-7955

Toronto
6285 Northam Drive, Suite 108
Mississauga, Ontario L4V 1X5, Canada
Tel: 905-673-0699 Fax: 905-673-6509

ASIA/PACIFIC

Australia
Microchip Technology Australia Pty Ltd
Suite 22, 41 Rawson Street
Epping 2121, NSW
Australia
Tel: 61-2-9868-6733 Fax: 61-2-9868-6755

China - Beijing
Microchip Technology Consulting (Shanghai) Co., Ltd., Beijing Liaison Office
Unit 915
Bei Hai Wan Tai Bldg.
No. 6 Chaoyangmen Beidajie
Beijing, 100027, No. China
Tel: 86-10-85282100 Fax: 86-10-85282104

China - Chengdu
Microchip Technology Consulting (Shanghai) Co., Ltd., Chengdu Liaison Office
Rm. 2401, 24th Floor,
Ming Xing Financial Tower
No. 88 TIDU Street
Chengdu 610016, China
Tel: 86-28-6766200 Fax: 86-28-6766599

China - Fuzhou
Microchip Technology Consulting (Shanghai) Co., Ltd., Fuzhou Liaison Office
Unit 28F, World Trade Plaza
No. 71 Wusi Road
Fuzhou 350001, China
Tel: 86-591-7503506 Fax: 86-591-7503521

China - Shanghai
Microchip Technology Consulting (Shanghai) Co., Ltd.
Room 701, Bldg. B
Far East International Plaza
No. 317 Xian Xia Road
Shanghai, 200051
Tel: 86-21-6275-5700 Fax: 86-21-6275-5060

China - Shenzhen
Microchip Technology Consulting (Shanghai) Co., Ltd., Shenzhen Liaison Office
Rm. 1315, 13/F, Shenzhen Kerry Centre,
Renminnan Lu
Shenzhen 518001, China
Tel: 86-755-2350361 Fax: 86-755-2366086

Hong Kong
Microchip Technology Hongkong Ltd.
Unit 901-6, Tower 2, Metroplaza
223 Hing Fong Road
Kwai Fong, N.T., Hong Kong
Tel: 852-2401-1200 Fax: 852-2401-3431

India
Microchip Technology Inc.
India Liaison Office
Divyasree Chambers
1 Floor, Wing A (A3/A4)
No. 11, O'Shaugnessey Road
Bangalore, 560 025, India
Tel: 91-80-2290061 Fax: 91-80-2290062

Japan
Microchip Technology Japan K.K.
Benex S-1 6F
3-18-20, Shinyokohama
Kohoku-Ku, Yokohama-shi
Kanagawa, 222-0033, Japan
Tel: 81-45-471- 6166 Fax: 81-45-471-6122

Korea
Microchip Technology Korea
168-1, Youngbo Bldg. 3 Floor
Samsung-Dong, Kangnam-Ku
Seoul, Korea 135-882
Tel: 82-2-554-7200 Fax: 82-2-558-5934

Singapore
Microchip Technology Singapore Pte Ltd.
200 Middle Road
#07-02 Prime Centre
Singapore, 188980
Tel: 65-6334-8870 Fax: 65-6334-8850

Taiwan
Microchip Technology Taiwan
11F-3, No. 207
Tung Hua North Road
Taipei, 105, Taiwan
Tel: 886-2-2717-7175 Fax: 886-2-2545-0139

EUROPE

Denmark
Microchip Technology Nordic ApS
Regus Business Centre
Lautrup hoj 1-3
Ballerup DK-2750 Denmark
Tel: 45 4420 9895 Fax: 45 4420 9910

France
Microchip Technology SARL
Parc d'Activite du Moulin de Massy
43 Rue du Saule Trapu
Batiment A - ler Etage
91300 Massy, France
Tel: 33-1-69-53-63-20 Fax: 33-1-69-30-90-79

Germany
Microchip Technology GmbH
Gustav-Heinemann Ring 125
D-81739 Munich, Germany
Tel: 49-89-627-144 0 Fax: 49-89-627-144-44

Italy
Microchip Technology SRL
Centro Direzionale Colleoni
Palazzo Taurus 1 V. Le Colleoni 1
20041 Agrate Brianza
Milan, Italy
Tel: 39-039-65791-1 Fax: 39-039-6899883

United Kingdom
Arizona Microchip Technology Ltd.
505 Eskdale Road
Winnersh Triangle
Wokingham
Berkshire, England RG41 5TU
Tel: 44 118 921 5869 Fax: 44-118 921-5820

03/01/02

© 2002 Microchip Technology Inc.

ООО «ЛайфЭлектроникс» “LifeElectronics” LLC

ИНН 7805602321 КПП 780501001 Р/С 40702810122510004610 ФАКБ "АБСОЛЮТ БАНК" (ЗАО) в г.Санкт-Петербурге К/С 30101810900000000703 БИК 044030703

Компания «Life Electronics» занимается поставками электронных компонентов импортного и отечественного производства от производителей и со складов крупных дистрибьюторов Европы, Америки и Азии.

С конца 2013 года компания активно расширяет линейку поставок компонентов по направлению коаксиальный кабель, кварцевые генераторы и конденсаторы (керамические, пленочные, электролитические), за счёт заключения дистрибьюторских договоров

Мы предлагаем:

- *Конкурентоспособные цены и скидки постоянным клиентам.*
- *Специальные условия для постоянных клиентов.*
- *Подбор аналогов.*
- *Поставку компонентов в любых объемах, удовлетворяющих вашим потребностям.*

- *Приемлемые сроки поставки, возможна ускоренная поставка.*
- *Доставку товара в любую точку России и стран СНГ.*
- *Комплексную поставку.*
- *Работу по проектам и поставку образцов.*
- *Формирование склада под заказчика.*

- *Сертификаты соответствия на поставляемую продукцию (по желанию клиента).*
- *Тестирование поставляемой продукции.*
- *Поставку компонентов, требующих военную и космическую приемку.*
- *Входной контроль качества.*
- *Наличие сертификата ISO.*

В составе нашей компании организован Конструкторский отдел, призванный помогать разработчикам, и инженерам.

Конструкторский отдел помогает осуществить:

- *Регистрацию проекта у производителя компонентов.*
- *Техническую поддержку проекта.*
- *Защиту от снятия компонента с производства.*
- *Оценку стоимости проекта по компонентам.*
- *Изготовление тестовой платы монтаж и пусконаладочные работы.*

Тел: +7 (812) 336 43 04 (многоканальный)
Email: org@lifeelectronics.ru

www.lifeelectronics.ru