FDD15 SERIES

DC - DC CONVERTER
10 ~ 15W SINGLE & DUAL OUTPUT

FEATURES

- LOW COST
- 2:1 WIDE INPUT RANGE
- I/O ISOLATION
- LC INPUT FILTER
- SHORT CIRCUIT PROTECTION
- HIGH PERFORMANCE
- 2 YEARS WARRANTY

MODEL LIST

MODEL NO.	INPUT VOLTAGE	INPUT CURRENT (typ.)	OUTPUT WATTAGE	OUTPUT VOLTAGE	OUTPUT CURRENT	EFF. (min.)	EFF. (typ.)	CAPACITOR LOAD (max.)
Single Output Models								
FDD15 - 03S1	9~18 VDC	1.1 A	10 WATTS	+ 3.3 VDC	3000 mA	75%	77%	4700 μF
FDD15 - 05S1	9~18 VDC	1.08 A	10 WATTS	+ 5 VDC	2000 mA	75%	77%	4700 μF
FDD15 - 12S1	9~18 VDC	1.07 A	10 WATTS	+ 12 VDC	834 mA	75%	77%	3500 μF
FDD15 - 15S1	9~18 VDC	1.07 A	10 WATTS	+ 15 VDC	667 mA	76%	78%	3500 μF
FDD15 - 03S2	18~36 VDC	0.54 A	10 WATTS	+ 3.3 VDC	3000 mA	75%	77%	4700 μF
FDD15 - 05S2	18~36 VDC	0.79 A	15 WATTS	+ 5 VDC	3000 mA	78%	80%	4700 μF
FDD15 - 12S2	18~36 VDC	0.78 A	15 WATTS	+ 12 VDC	1250 mA	79%	81%	3500 μF
FDD15 - 15S2	18~36 VDC	0.77 A	15 WATTS	+ 15 VDC	1000 mA	80%	82%	3500 μF
FDD15 - 03S3	36~72 VDC	0.27 A	10 WATTS	+ 3.3 VDC	3000 mA	74%	76%	4700 μF
FDD15 - 05S3	36~72 VDC	0.39 A	15 WATTS	+ 5 VDC	3000 mA	78%	80%	4700 μF
FDD15 - 12S3	36~72 VDC	0.39 A	15 WATTS	+ 12 VDC	1250 mA	79%	81%	3500 μF
FDD15 - 15S3	36~72 VDC	0.39 A	15 WATTS	+ 15 VDC	1000 mA	79%	81%	3500 μF
Dual Output Models								
FDD15 - 12D1	9~18 VDC	1.12 A	10 WATTS	± 12 VDC	± 417 mA	73%	76%	± 1000μF
FDD15 - 15D1	9~18 VDC	1.09 A	10 WATTS	± 15 VDC	± 334 mA	75%	78%	± 1000μF
FDD15 - 12D2	18~36 VDC	0.77 A	15 WATTS	± 12 VDC	± 625 mA	80%	83%	± 1000μF
FDD15 - 15D2	18~36 VDC	0.77 A	15 WATTS	± 15 VDC	± 500 mA	80%	83%	± 1000μF
FDD15 - 12D3	36~72 VDC	0.38 A	15 WATTS	± 12 VDC	± 625 mA	80%	83%	± 1000μF
FDD15 - 15D3	36~72 VDC	0.38 A	15 WATTS	± 15 VDC	± 500 mA	80%	83%	± 1000μF

SPECIFICATION

All Specifications Typical At Nominal Line, Full Load, 25°C Unless Otherwise Noticed

GENERAL

Characteristics	Conditions	min.	typ.	max.	unit
Switching frequency	Vi nom, Io nom		200		KHz
Isolation voltage	Input - Output	1500			VDC
Isolation resistance	Input - Output, @ 500VDC	100			MΩ
Isolation capacitance	100KHz / 1V			1000	PF
Ambient temperature	Operating at Vi nom, Io nom	-10		+ 51	°C
Case temperature	Operating at Vi nom, Io nom			+ 85	°C
Derating	Vi nom	See derating curve			
Storage temperature	Non operational	-25		+100	°C
Relative humidity	Vi nom, Io nom	20		95	% RH
Temperature coefficient	Vi nom, Io min			± 0.02	% / °C
Dimension		L50.8 x W50.8 x H12.0			mm
MTBF	Bellcore issue 6@40°C, GB		889000		Hours
Cooling	Free air convection				

INPUT SPECIFICATIONS

Characteristics	Conditions		min.	typ.	max.	unit
Input voltage range	Ta min ...Ta max, Io nom		9	12	18	VDC
			18	24	36	VDC
			36	48	72	VDC
No load input current	Vi nom, Io=0	12V models			30	mA
		24V models			25	mA
		48V models			15	mA
Input voltage w/o damage	Io nom	12V models			20	VDC
		24V models			40	VDC
		48V models			75	VDC
Startup voltage	Io nom	12V models		8.5		VDC
		24V models		15		VDC
		48V models		35		VDC
Input filter	Pi type					

OUTPUT SPECIFICATIONS

Characteristics	Conditions		min.	typ.	max.	unit
Output voltage accuracy	Vi nom, Io nom				± 2	%
Minimum load	Vi nom	single output models	0			%
		dual output models (each output)	20			%
Line regulation	Io nom, Vi min ...Vi max				± 1	%
Load regulation	Vi nom, Io 0 ...Io nom, single output models				± 2	%
	Vi nom, Io min ...Io nom, dual output models				± 5	%
Cross regulation (Dual model)	Aymmetrical load 20% - 100% FL				± 5	%
Startup time	Vi nom, Io nom				1000	ms
Transient recovery time	Vi nom, 1 ~ 0.5 Io nom				500	μs
Ripple & noise	Vi nom, Io nom, BW = 20MHz	3.3V model			100	mV
		5V, 12V, 15V & dual			Vout x ± 1%	mV
Efficiency	Vi nom, Io nom, Po / Pi		Up to 83%, See model list and efficiency curve			

CONTROL AND PROTECTION

Input reversed	Shunt diode built in, external fuse recommended (12Vin : 1.5A, 24Vin : 1 A, 48Vin : 0.5 A)
Output short circuit	Current limited (Auto-recovery)
Rated over load protection	110%min....140%max

PHYSICAL CHARACTERISTICS

Case size	50.8 x 50.8 x 12.0 mm (2 x 2 x 0.47 inches)
Case material	Plastic base / Metal case
Weight	70 g
Patting material	Epoxy

MECHANISM & PIN CONFIGURATION

mm [inch]

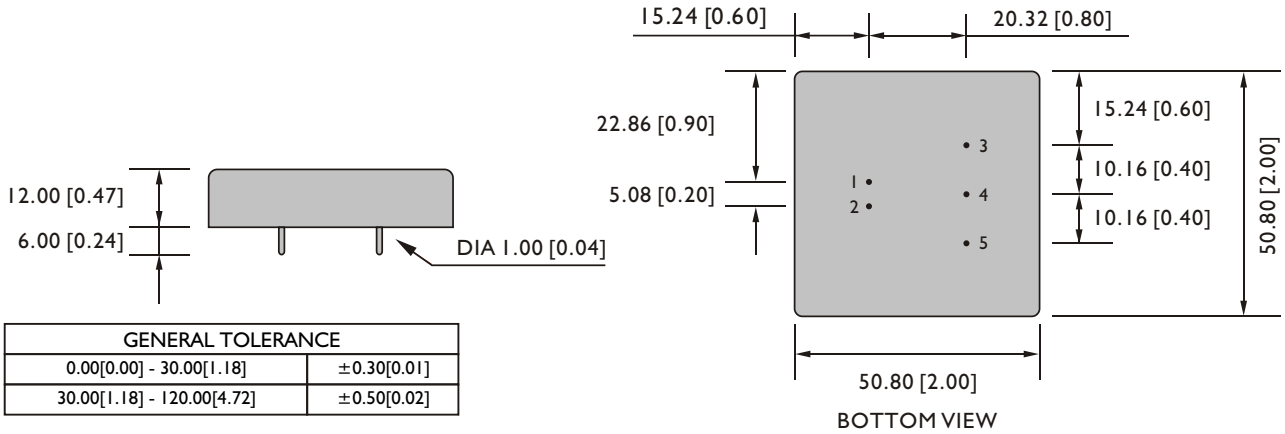

GENERAL TOLERANCE	
0.00[0.00] - 30.00[1.18]	±0.30[0.01]
30.00[1.18] - 120.00[4.72]	±0.50[0.02]

PIN ASSIGNMENT

GENERAL

PIN NO.	1	2	3	4	5
SINGLE	Vi+	Vi -	Vo+	NO PIN	Vo -
DUAL	Vi+	Vi -	Vo+	com	Vo -

CIRCUIT SCHEMATIC

• Block diagram for FDD15 series with single output

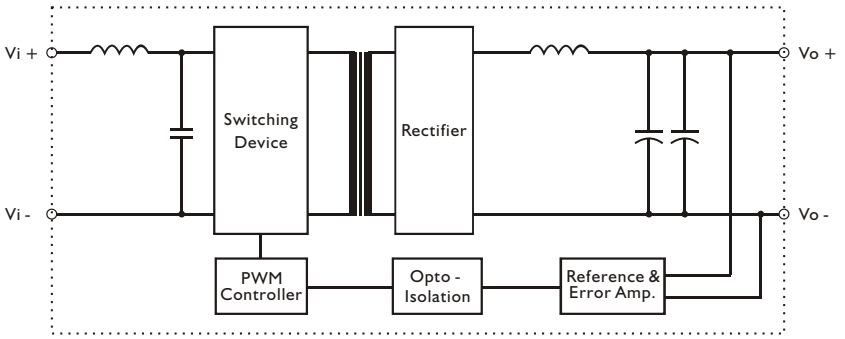

• Block diagram for FDD15 series with dual output

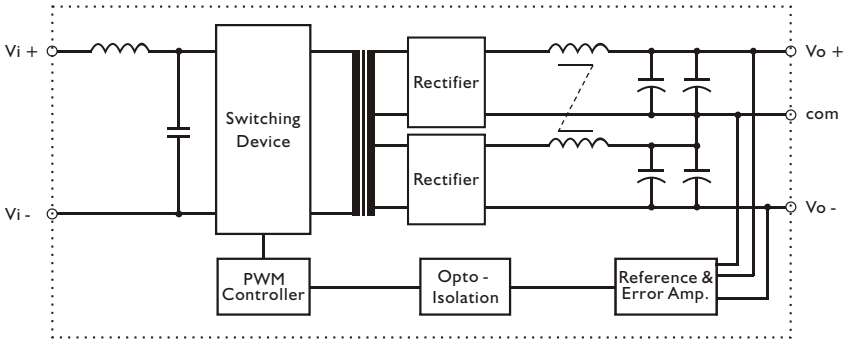

RECOMMENDED CIRCUIT

• Recommended filter for EN55022 Class B compliance

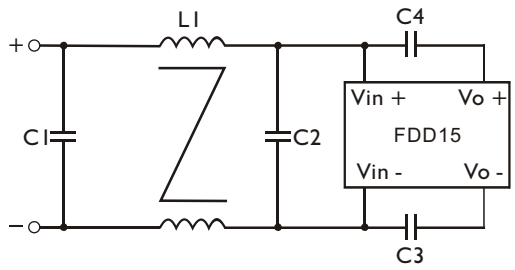

• The commponents used in the above figure, together with the manufacturer part numbers for these components, are as follows.

	C1	C2	C3	C4	L1
FDD15-XXX1	6.8μF / 50V MLCC	4.7μF / 50V MLCC	InF / 2KV MLCC	InF / 2KV MLCC	0.5mH Common Choke
FDD15-XXX2	4.7μF / 50V MLCC	4.7μF / 50V MLCC	InF / 2KV MLCC	InF / 2KV MLCC	0.5mH Common Choke
FDD15-XXX3	4.7μF / 100V MLCC	4.7μF / 100V MLCC	InF / 2KV MLCC	InF / 2KV MLCC	0.5mH Common Choke

• Recommended EN 55022 Class B filter circuit layout.

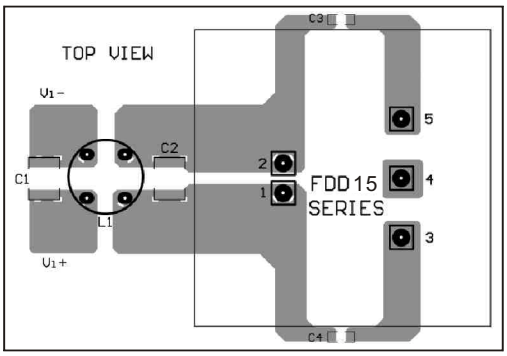

DERATING AND EFFICIENCY CURVE

Temperature derating curve

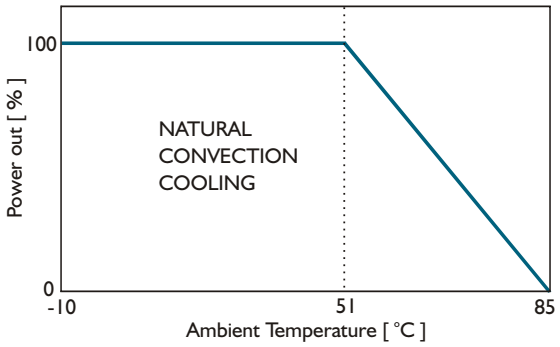

Efficiency Vs Input Voltage
FDD15-05S2

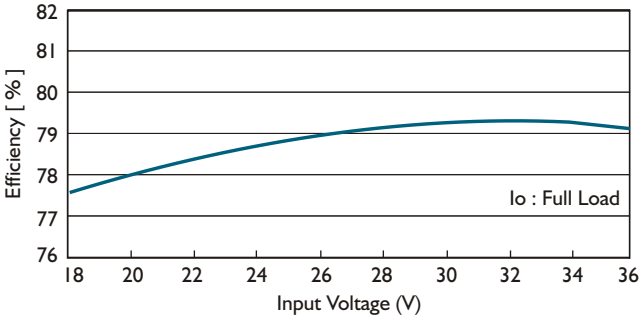

Efficiency Vs Output Load
FDD15-05S2

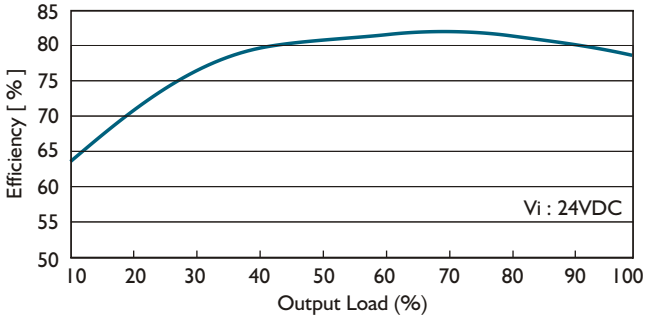

FDD15 SERIES

DC - DC CONVERTER
10 ~ 15W TRIPLE OUTPUT

FEATURES

- LOW COST
- 2:1 WIDE INPUT RANGE
- I/O ISOLATION
- LC INPUT FILTER
- SHORT CIRCUIT PROTECTION
- HIGH PERFORMANCE
- 2 YEARS WARRANTY

MODEL LIST

MODEL NO.	INPUT VOLTAGE	INPUT CURRENT (typ.)	OUTPUT WATTAGE	OUTPUT VOLTAGE	OUTPUT CURRENT	EFF. (min.)	EFF. (typ.)	CAPACITOR LOAD (max.)
Triple Output Models								
FDD15 - 0512T1	9~18 VDC	1.07 A	10 WATTS	+5 / ±12 VDC	1.5A / ± 0.12A	77%	79%	4700 μF / ±2200 μF
FDD15 - 0515T1	9~18 VDC	1.07 A	10 WATTS	+5 / ±15 VDC	1.5A / ± 0.1 A	77%	79%	4700 μF / ±2200 μF
FDD15 - 0512T2	18~36 VDC	0.76 A	15 WATTS	+5 / ±12 VDC	2 A / ± 0.2 A	80%	82%	4700 μF / ±2200 μF
FDD15 - 0515T2	18~36 VDC	0.76 A	15 WATTS	+5 / ±15 VDC	2 A / ± 0.16A	80%	82%	4700 μF / ±2200 μF
FDD15 - 0512T3	36~72 VDC	0.38 A	15 WATTS	+5 / ±12 VDC	2 A / ± 0.2 A	80%	82%	4700 μF / ±2200 μF
FDD15 - 0515T3	36~72 VDC	0.38 A	15 WATTS	+5 / ±15 VDC	2 A / ± 0.16A	80%	82%	4700 μF / ±2200 μF

SPECIFICATION

All Specifications Typical At Nominal Line, Full Load, 25°C Unless Otherwise Noticed

GENERAL

Characteristics	Conditions	min.	typ.	max.	unit
Switching frequency	Vi nom, Io nom		180		KHz
Isolation voltage	Input - Output	1500			VDC
Isolation resistance	Input - Output, @ 500VDC	100			MΩ
Isolation capacitance	100KHz / 1V			1000	PF
Ambient temperature	Operating at Vi nom, Io nom	-10		+ 51	°C
Case temperature	Operating at Vi nom, Io nom			+100	°C
Derating	Vi nom	See derating curve			
Storage temperature	Non operational	-40		+100	°C
Relative humidity	Vi nom, Io nom	20		95	% RH
Temperature coefficient	Vi nom, Io min			± 0.02	% / °C
Dimension		L50.8 x W50.8 x H12.0			mm
MTBF	Bellcore issue 6@40°C, GB		720000		Hours
Cooling	Free air convection				

INPUT SPECIFICATIONS

Characteristics	Conditions		min.	typ.	max.	unit
Input voltage range	Ta min ... Ta max, Io nom		9	12	18	VDC
			18	24	36	VDC
			36	48	72	VDC
No load input current	Vi nom, Io = 0	12V models			30	mA
		24V models			25	mA
		48V models			15	mA
Input voltage w/o damage	Io nom	12V models			20	VDC
		24V models			40	VDC
		48V models			75	VDC
Startup voltage	Io nom	12V models		8.5		VDC
		24V models		13.6		VDC
		48V models		24		VDC
Input filter	Pi type					

OUTPUT SPECIFICATIONS

Characteristics	Conditions		min.	typ.	max.	unit
Output voltage accuracy	Vi nom, Io nom	+ 5V			± 2	%
		±12V or ±15V			± 6	%
Minimum load	Vi nom	+ 5V	10			%
		±12V or ±15V	20			%
Line regulation	Vi min ...Vi max, Io nom	+ 5V			± 2	%
		±12V or ±15V			± 6	%
Load regulation	Vi nom, Io min ...Io nom	+ 5V			± 2	%
		±12V or ±15V			± 6	%
Cross regulation	Aymmetrical load 20% - 100% FL				± 6	%
Startup time	Vi nom, Io nom				30	ms
Transient recovery time	Vi nom, 1 ~ 0.5 Io nom				500	μs
Ripple & noise	Vi nom, Io nom, BW = 20MHz				Vout x ± 1%	mV
Efficiency	Vi nom, Io nom, Po / Pi		Up to 82%, See model list and efficiency curve			

CONTROL AND PROTECTION

Remote ON / OFF	ON : opened or 8 ~ 10VDC applied, reference to input GND OFF : -0.3 ~ 2VDC applied, reference to input GND
Input reversed	Shunt diode built in, external fuse recommended (12Vin : 1.5A, 24Vin : 1A, 48Vin : 0.5A)
Output short circuit	Current limited (Auto-recovery)
Rated over load protection	110%min....140%max

PHYSICAL CHARACTERISTICS

Case size	50.8 x 50.8 x 12.0 mm (2 x 2 x 0.47 inches)
Case material	Plastic base / Metal case
Weight	70 g
Patting material	Epoxy

MECHANISM & PIN CONFIGURATION

mm [inch]

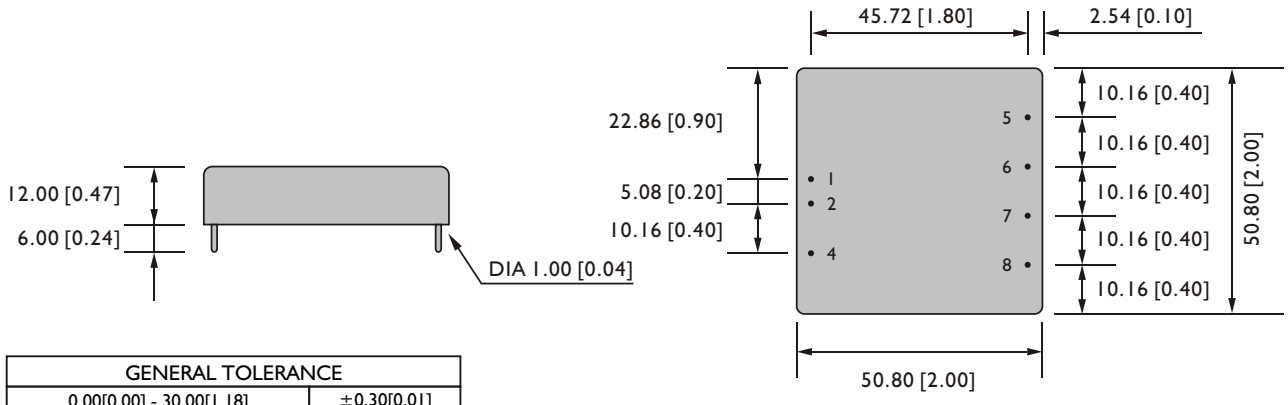

GENERAL TOLERANCE	
0.00[0.00] - 30.00[1.18]	±0.30[0.01]
30.00[1.18] - 120.00[4.72]	±0.50[0.02]

PIN ASSIGNMENT

GENERAL

PIN NO.	1	2	4	5	6	7	8
TRIPLE	Vi+	Vi -	ON / OFF	Vo2 (+ OUT)	Vo1 (+ 5V)	com	Vo3 (- OUT)

CIRCUIT SCHEMATIC

• Block diagram for FDD15T series with triple output

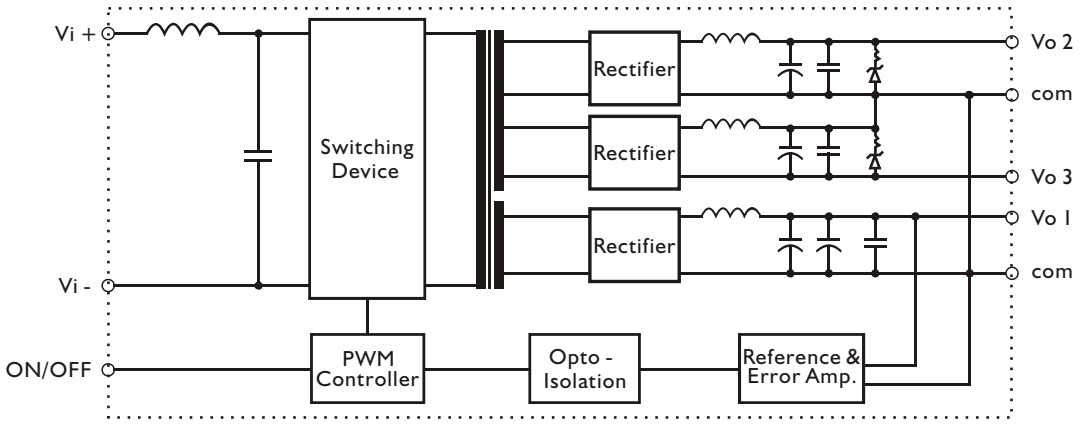

RECOMMENDED CIRCUIT

• Recommended filter for EN55022 Class B compliance

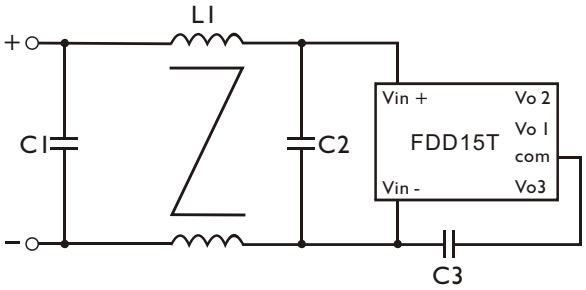

• The commponents used in the above figure, together with the manufacturer part numbers for these components, are as follows.

	C1	C2	C3	L1
FDD15-XXXXT1	3.3μF / 50V MLCC	3.3μF / 50V MLCC	InF / 2KV MLCC	0.5mH Common Choke
FDD15-XXXXT2	3.3μF / 50V MLCC	3.3μF / 50V MLCC	InF / 2KV MLCC	0.5mH Common Choke
FDD15-XXXXT3	2.2μF / 100V MLCC	2.2μF / 100V MLCC	InF / 2KV MLCC	0.5mH Common Choke

• Recommended EN 55022 Class B filter circuit layout.

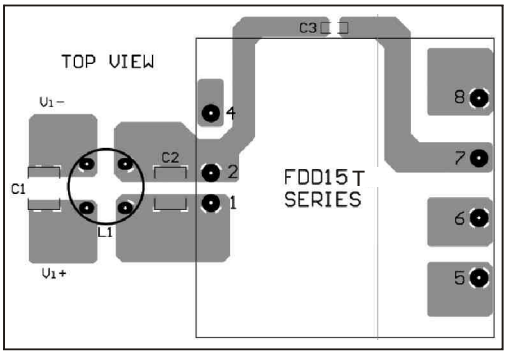

DERATING AND EFFICIENCY CURVE

Temperature derating curve

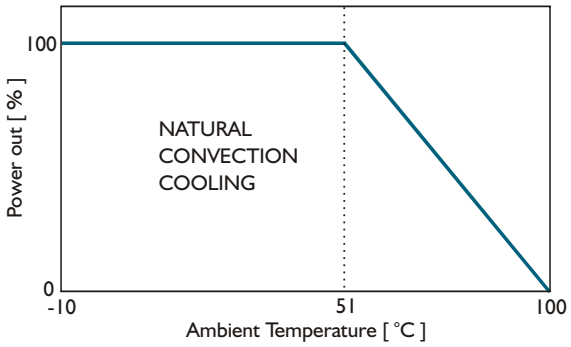

Efficiency Vs Input Voltage
FDD15-0515T2

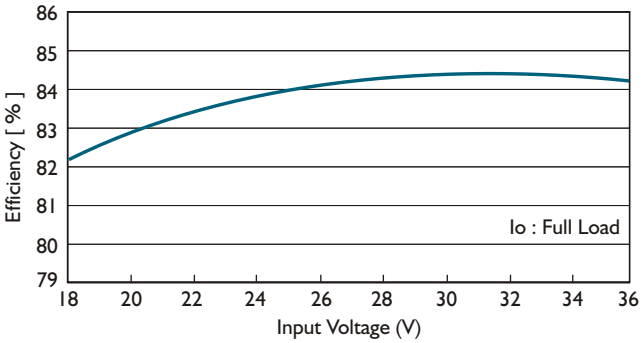

Efficiency Vs Output Load
FDD15-0515T2

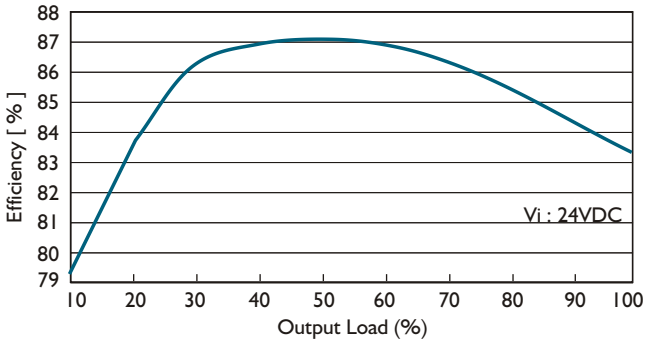

ООО «ЛайфЭлектроникс» “LifeElectronics” LLC

ИНН 7805602321 КПП 780501001 Р/С 40702810122510004610 ФАКБ "АБСОЛЮТ БАНК" (ЗАО) в г.Санкт-Петербурге К/С 30101810900000000703 БИК 044030703

Компания «Life Electronics» занимается поставками электронных компонентов импортного и отечественного производства от производителей и со складов крупных дистрибьюторов Европы, Америки и Азии.

С конца 2013 года компания активно расширяет линейку поставок компонентов по направлению коаксиальный кабель, кварцевые генераторы и конденсаторы (керамические, пленочные, электролитические), за счёт заключения дистрибьюторских договоров

Мы предлагаем:

- *Конкурентоспособные цены и скидки постоянным клиентам.*
- *Специальные условия для постоянных клиентов.*
- *Подбор аналогов.*
- *Поставку компонентов в любых объемах, удовлетворяющих вашим потребностям.*

- *Приемлемые сроки поставки, возможна ускоренная поставка.*
- *Доставку товара в любую точку России и стран СНГ.*
- *Комплексную поставку.*
- *Работу по проектам и поставку образцов.*
- *Формирование склада под заказчика.*

- *Сертификаты соответствия на поставляемую продукцию (по желанию клиента).*
- *Тестирование поставляемой продукции.*
- *Поставку компонентов, требующих военную и космическую приемку.*
- *Входной контроль качества.*
- *Наличие сертификата ISO.*

В составе нашей компании организован Конструкторский отдел, призванный помогать разработчикам, и инженерам.

Конструкторский отдел помогает осуществить:

- *Регистрацию проекта у производителя компонентов.*
- *Техническую поддержку проекта.*
- *Защиту от снятия компонента с производства.*
- *Оценку стоимости проекта по компонентам.*
- *Изготовление тестовой платы монтаж и пусконаладочные работы.*

Тел: +7 (812) 336 43 04 (многоканальный)
Email: org@lifeelectronics.ru

www.lifeelectronics.ru