Description

GM38C4x is fixed frequency, high performance, and current- mode PWM controllers. Gamma's BiCMOS devices are pin compatible with standard 384x bipolar devices but with several improvements.

Undervoltage lockout circuitry allows the '42 and '44 versions to start up at 14.5V and operate down to 9V, and the '43 and '45 versions start at 8.4V with operation down to 7.6V. All versions operate up to 16V.

When compared to bipolar 384x devices operating from a 15V supply, start-up current has been reduced to 50μA typical and operating current has been reduced to 4.0 mA typical. Decreased output rise/fall times drive larger MOSFETs, and rail-to-rail output capability increases efficiency, especially at lower supply voltages. GM38C4x also features a trimmed oscillator discharge current and bandgap reference.

GM38C4x denotes 8-pin plastic DIP and SOP packages.

Features

- **40ns output rise and 30ns output fall times**
- **-40° to +85°C temp. range same as standard UC284x**
- **Low-power BiCMOS Process**
- **Very low start-up current (50μA typical)**
- **Low operating current (4mA typical)**
- **CMOS outputs with rail-to-rail swing**
- **≥500kHz current-mode operation**
- **Pin-for-pin compatible with UC3842/ 3843 / 3844/ 3845(A)**
- **Trimmed oscillator discharge current**
- **UVLO with hysteresis**
- **Low cross-conduction currents**

Application

Current-mode, off-line, switched-mode power supplies
Current-mode, dc-to-dc converters.
Step-down "buck" regulators
Step-up "boost" regulators
Flyback, isolated regulators
Forward converters
Synchronous FET converters

◆ MARKING INFORMATION & PIN CONFIGURATIONS (TOP VIEW)

SOP - 8

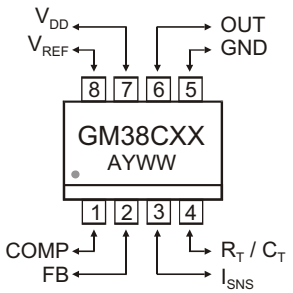

DIP - 8

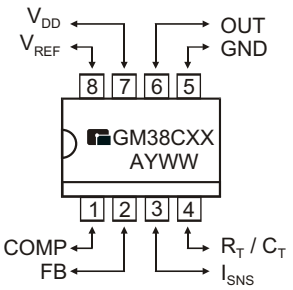

A = Assembly Location
Y = Year
W W = Weekly

◆ ORDERING INFORMATION

Ordering Number	Package	Shipping
GM38C42S8T	SOP - 8	100 Units/ Tube
GM38C42S8R	SOP - 8	2,500 Units/ Tape & Reel
GM38C42D8T	DIP-8	60 Units/ Tube
GM38C43S8T	SOP - 8	100 Units/ Tube
GM38C43S8R	SOP - 8	2,500 Units/ Tape & Reel
GM38C43D8T	DIP-8	60 Units/ Tube
GM38C44S8T	SOP - 8	100 Units/ Tube
GM38C44S8R	SOP - 8	2,500 Units/ Tape & Reel
GM38C44D8T	DIP-8	60 Units/ Tube
GM38C45S8T	SOP - 8	100 Units/ Tube
GM38C45S8R	SOP - 8	2,500 Units/ Tape & Reel
GM38C45D8T	DIP-8	60 Units/ Tube

* For detail Ordering Number identification, please see last page.

◆ ABSOLUTE MAXIMUM RATINGS

PARAMETER	SYMBOL	VALUE	UNIT
Zener Current Operation at ≥ 16V may require special precautions(Note6)	I_{DD}	30	mA
Supply Voltage(Note 6)	V_{DD}	18	V
Switch Supply Voltage	V_D	18	V
Current Sense Voltage	V_{ISNS}	- 0.3 to + 5.5	V
Feedback Voltage	V_{FB}	- 0.3 to + 5.5	V
Output Current	I_{OUT}	0.5	A
Storage Temperature	T_A	- 50 to + 150	°C

◆ OPERATING RATINGS

PARAMETER	SYMBOL	VALUE	UNIT
Junction Temperature	T_J	150	°C

◆ PACKAGE PIN DESCRIPTION

PIN LEAD	FUNCTION	FUNCTION
1	COMP	Compensation: Connect external Compensation network to modify the error amplifier output.
2	FB	Feedback (Input): Error amplifier input .Feedback is 2.5Vat desired output voltage.
3	I_{SNS}	Current Sense (Input): Current sense comparator input. Connect to current sensing resistor or current transformer.
4	R_T / C_T	Timing Resistor / Timing Capacitor: Connect external RC network to select switching frequency.
5	GND	Ground: Combined analog and power ground.
6	OUT	Power Output: Totem - pole output.
7	V_{DD}	Analog Supply (Input): Controller circuitry supply input. Return to analog ground (AGND).
8	V_{REF}	5V Reference (Output): Connect external RC network.

◆ BLOCK DIAGRAM

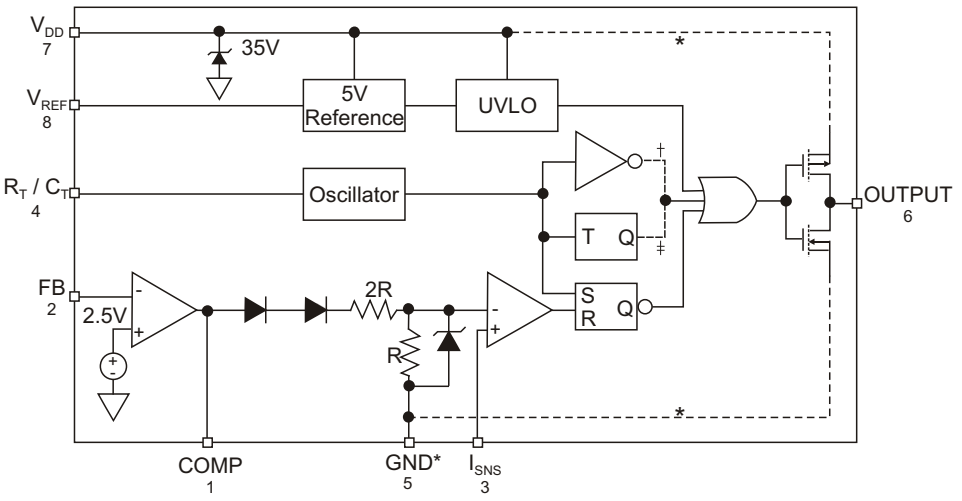

* 8 - lead versions only

◆ ELECTRICAL CHARACTERISTICS

(T_A = -40°C to 85°C, Note 4, V_{DD} = 15V, C_T=3.3 nF, R_T=10k , unless otherwise noted)

CHARACTERISTICS	TEST CONDITIONS	MIN	TYP	MAX	UNIT
Reference Section					
Output Voltage	T_A = 25°C, I_O = 1mA	4.9	5.0	5.1	V
Line Regulation	12V ≤ V_{DD} ≤ 16V, I_O = 5μA, (Note 6)		2	20	mV
Load Regulation	1≤ I_O≤ 20mA		1	25	mV
Temp. Stability	(Note 1)		0.2		mV / °C
Total Output Variation	Line, Load, Temp.,Note 1	4.82		5.18	V
Output Noise Voltage	10Hz≤ f ≤10kHz, T_A = 25°C, (Note 1)		50		μV
Long Term Stability	T_A = 125°C, 1000hrs., (Note 1)		5	25	mV
Output Short Circuit		-30	-80	-180	mA
Oscillator Section					
Initial Accuracy	T_A = 25°C, (Note 5)	49	52	55	KHz
Voltage Stability	12≤ V_{DD}≤ 16V, (Note 6)		0.2	1.0	%
Temp. Stability	T_{MIN} ≤ T_A ≤ T_{MAX}, (Note 1)		0.04		% / °C
Clock Ramp Reset Current	T_A = 25°C, $V_{RT/CT}$ = 2V, T_{MIN} ≤ T_A ≤ T_{MAX}	7.7 7.2	8.4 8.4	9.0 9.5	mA
Amplitude	$V_{RT/CT}$ (Peak to Peak)		1.9		Vp-p
Error Amplifier Section					
Input Current	V_{FB} = 5V		-0.1	-2	μA
Input Voltage	V_{COMP} = 2.5V	2.42	2.5	2.58	V
Open Loop Voltage Gain	2V ≤ V_O ≤ 4V	65	90		dB
Power Supply Rejection Ratio	12V ≤ V_{DD} ≤ 16V	60			dB
Output Sink Current	V_{FB} = 2.7V, V_{COMP} = 1.1V	2	14		mA
Output Source Current	V_{FB} = 2.3V, V_{COMP} = 5V	-0.5	-1		mA
High Output Voltage	V_{FB} = 2.3V, R_L = 15k to GND	5.0	6.6		V
Low Output Voltage	V_{FB} = 2.7V, R_L = 15k to V_{REF}		0.1	1.1	V
Unity Gain Bandwidth	(Note 1)	0.7	1.0		MHz
Current Sense Section					
Gain	Note 2 and 3	2.85	3.0	3.15	V / V
Maximum Threshold	V_{COMP} = 5V, (Note 2)	0.9	1.0	1.1	V
PSRR	12V ≤ V_{DD} ≤ 16V, (Note 2)		70		dB
Input Bias Current			-1.0	-2	μA
Delay to Output			120	250	ns

◆ ELECTRICAL CHARACTERISTICS

(T_A = -40°C to 85°C, Note 4, V_{DD} = 15V, C_T=3.3 nF, R_T=11k , unless otherwise noted)

CHARACTERISTICS	TEST CONDITIONS	MIN	TYP	MAX	UNIT
Output Section					
$R_{DS(ON)}$ High	I_{SOURCE} = 200mA		20		
$R_{DS(ON)}$ Low	I_{SINK} = 200mA		11		
Rise Time	T_A = 25°C, C_L = 1nF		40	80	ns
Fall Time	T_A = 25°C, C_L = 1nF		30	60	ns
Undervoltage Lockout Section					
Start Threshold	GM38C42, GM38C44	13.5	14.5	15.5	V
	GM38C43, GM38C45	7.8	8.4	9.0	
Minimum Operating Voltage	GM38C42, GM38C44	8	9	10	V
	GM38C43, GM38C45	7.0	7.6	8.2	
PWM Section					
Maximum Duty Cycle	GM38C42, GM38C43	94	96		%
	GM38C44, GM38C45	46	50		
Minimum Duty Cycle				0	%
Total Standby Current					
Start - Up Current	V_{DD} = 13V for GM38C42, GM38C44 V_{DD} = 7.5V for GM38C43, GM38C45		50	200	µA
Operating Supply Current	V_{FB} = V_{ISNS} = 0V		4	6	mA
Zener Voltage (V_{DD})	I_{DD} = 25 mA, Note 6	30	37		V

Note 1: These parameters, although guaranteed, are not 100% tested in production.
Note 2: Parameter measured at trip point of latch with V_{EA} = 0.
Note 3: Gain defined as:

$$A = \frac{V_{PIN1}}{V_{TH}(I_{SNS})} \; ; 0 \leq V_{TH}(I_{SNS}) \leq 0.8V$$

Note 4: Adjust V_{DD} above the start threshold before setting at 15V.
Note 5: Output frequency equals oscillator frequency for the GM38C42 and GM38C43. Output frequency for the GM38C44, and GM38C45 equals one half the oscillator frequency.
Note 6: On 8-pin version, 18V is maximum input on pin 7, as this is also the supply pin for the output stage.

◆ TYPICAL PERFORMANCE CHARACTERISTICS

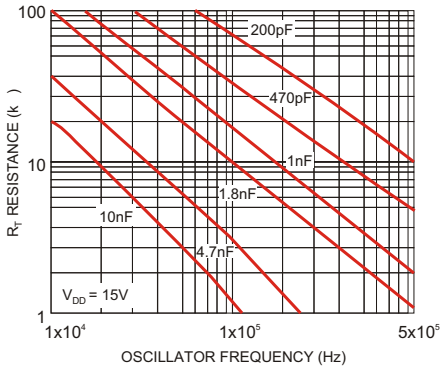

Figure 1. Oscillator Frequency Configuration

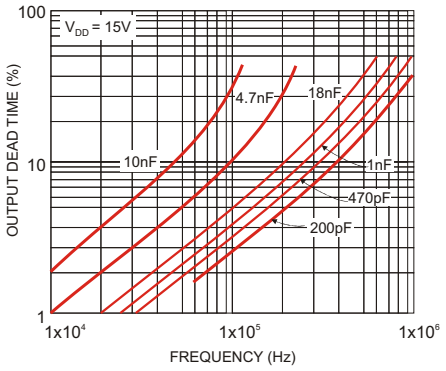

Figure 2. GM38C42, GM38C43 Output Dead Time vs. Oscillator Frequency

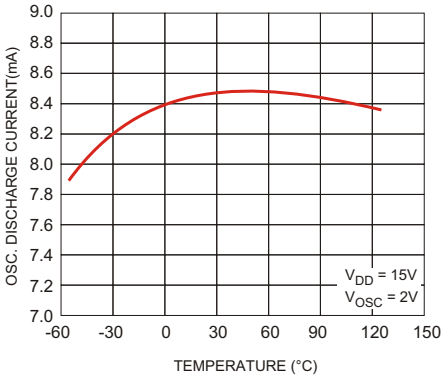

Figure 3. Oscillator Discharge Current vs. Temperature

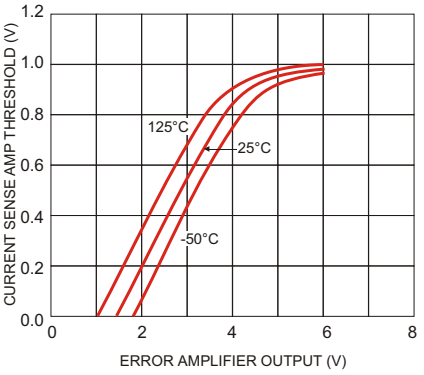

Figure 4. Current Sense Amplifier vs. Error Amplifier Output

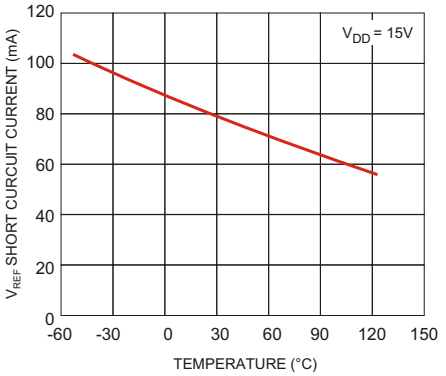

Figure 5. Short - Circuit Reference Current vs. Temperature

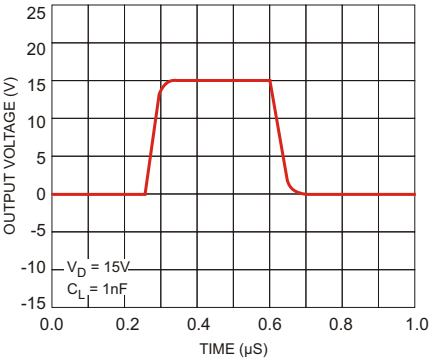

Figure 6. GM38C4X Output Waveform

◆ Application Information

Familiarity with 384x converter designs is assumed.
GM38C4x has been designed to be compatible with 384xA series controllers.

GM38C4x Advantages
Start-up Current
Start-up current has been reduced to an ultra-low 50µA(typical) permitting higher-valued, lower-wattage, and start-up resistors (power controller during power supply start-up). The reduced resistor wattage reduces cost and printed circuit space.

Operating Current
Operating current has been reduced to 4mA compared to 11mA for a typical bipolar controller. The controller runs cooler and the V_{DD} hold-up capacitance required during start-up may be reduced.

Output Driver
Complementary internal P-and N-channel MOSFETs produce rail-to-rail output voltages for better performance driving external power MOSFETs. The driver transistor's low on resistance and high peak current capability can drive gate capacitances of greater than 1000pF. The value of output capacitance which can be driven is determined only by the rise/fall time requirements. Within the restrictions of output capacity and controller power dissipation, maximum switching frequency can approach 500kHz.

Design Precautions
When operating near 20V, circuit transients can easily exceed 20V absolute maximum rating and permanently damaging the controller's CMOS construction. To reduce transients, use a 0.1µF low-ESR capacitor to next to the controller's supply V_{DD} (or V_D for '-1' versions)and ground connections.
Film type capacitors, such as Wima MKS2, are recommended.

When designing high -frequency converters, avoid capacitive and inductive coupling of the switching waveform into high impedance circuitry such as the error amplifier, oscillator, and current sense amplifier. Avoid long printed-circuit traces and component leads. Locate oscillator and compensation circuitry neat the IC. Use high frequency decoupling capacitors on V_{ERF}, and if necessary, on V_{DD}. Return high di/dt currents directly to their source and use large ground planes.

Buck Converter
Refer to Figure 7. When at lest 26V is applied to the input, C5 is charged through R2 until the voltage V_{DD} is greater than 14.5V(the undervoltage lockout value of the GM38C42), output switching begins when Q1is turned on by the gate drive transformer T1 and charging the output filter capacitor C3 through L1. D5 supplies a regulated +12V to V_{DD} once the circuit is running.

Current sense transformer CT1 provides current feedback to ISNS for current-mode operation and cycle-by-cycle current limiting. This is more efficient than a high- power sense resistor and provides the required ground-referenced level shift.

When Q1 turns off, current flow continues from ground through D1 and L1 until Q1 is turned on again.

The 100V Schottky diode D1 reduces the forward voltage drop in the main current path, resulting in higher efficiency than could be accomplished by using an ultra-fast recovery diode. R1 and C2 suppress parasitic oscillations from D1.

Using a high-value inductance for L1 and a low-ESR capacitor for C3 permits small capacitance with minimum output ripple. This inductance value also improves circuit efficiency by reducing the flux swing in L1.
Magnetic components are carefully chosen for minimal loss at 500kHz.

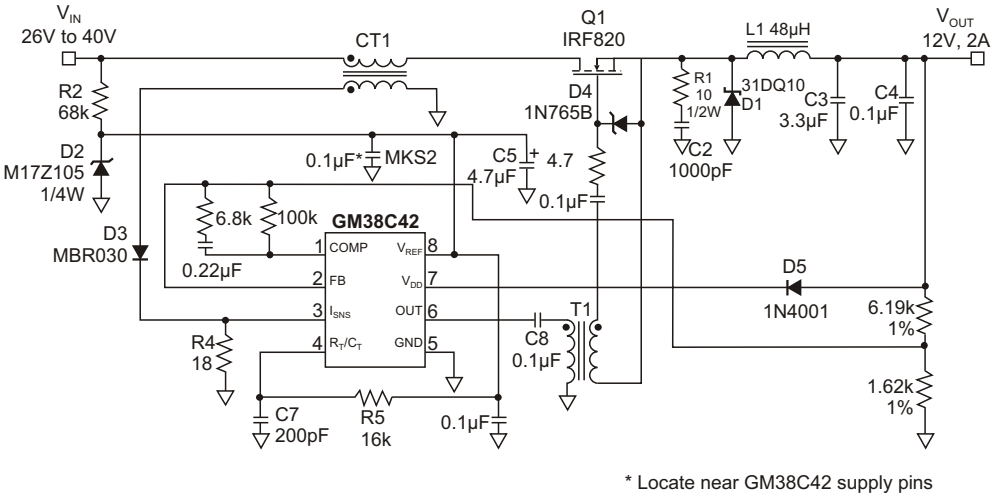

Figure 7. 500kHz, 25W, Buck Converter

Test	Conditions	Results
Line Regulation	V_{IN}= 26V to 80V, I_O= 2A	0.5%
Load Regulation	V_{IN}= 48V, I_O= 0.2A to 2A	0.6%
Efficiency	V_{IN}= 48V, I_O= 2A	90%
Output Ripple	V_{IN}= 48V, I_O= 2A (20MHz BW)	100mV

◆ SOP-8 PACKAGE OUTLINE DIMENSIONS

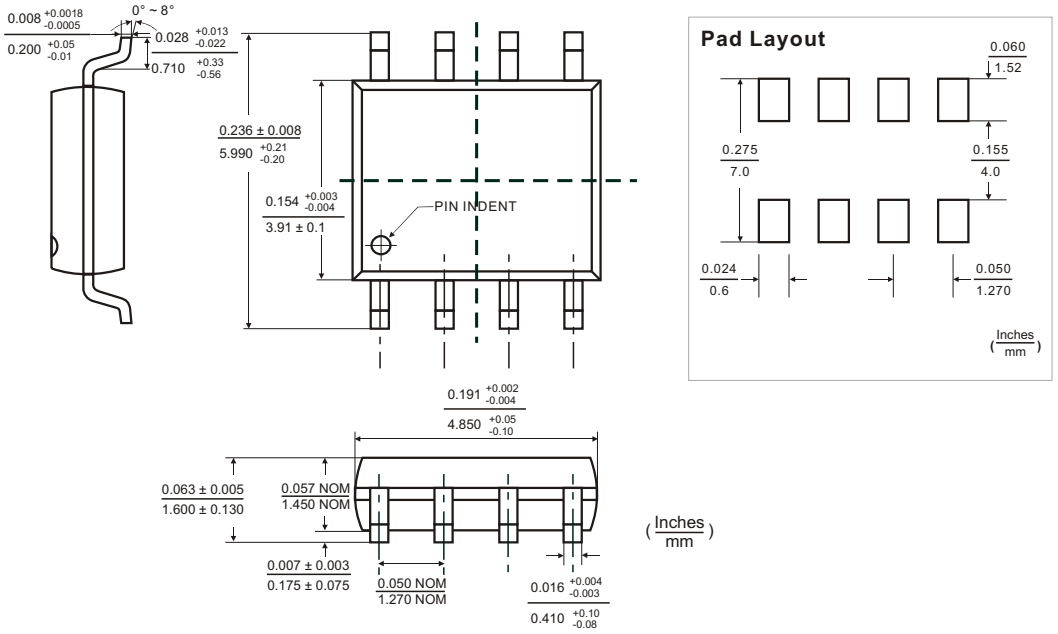

◆ DIP-8 PACKAGE OUTLINE DIMENSIONS

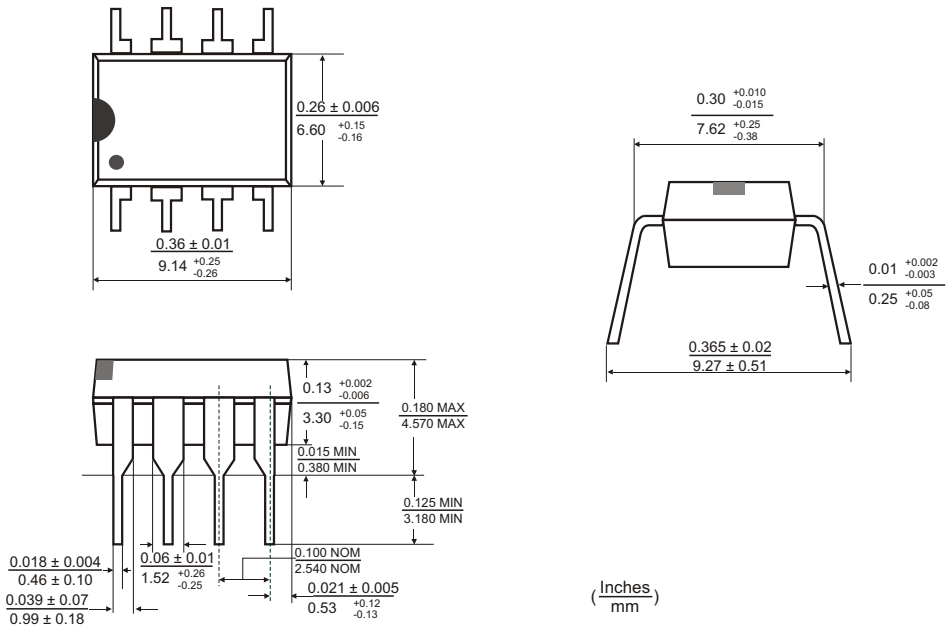

◆ ORDERING NUMBER

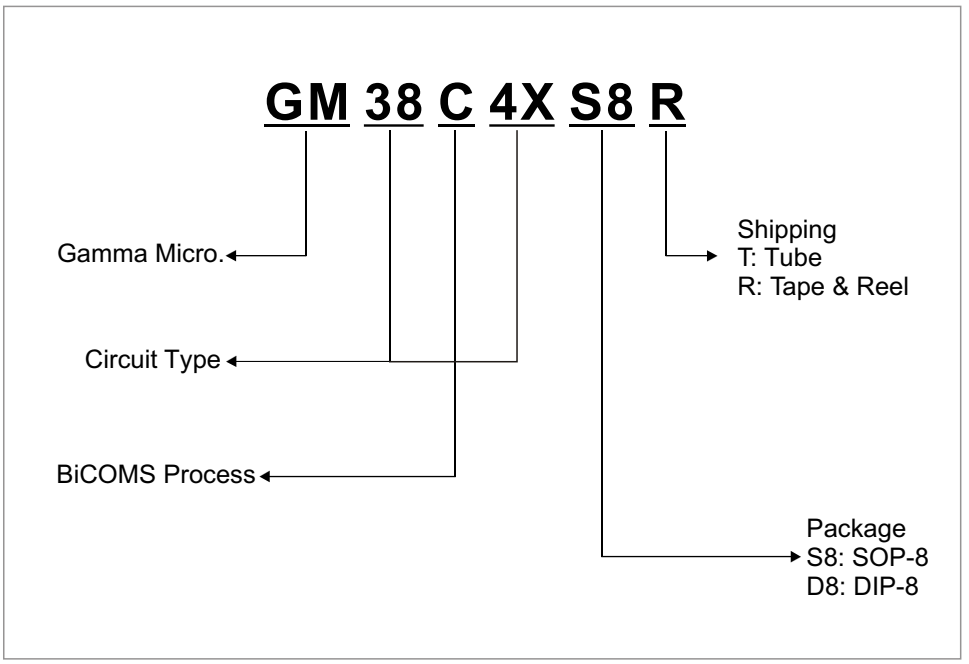

GAMMA Micro, GAMMA, and are registered trademarks of GAMMA MICROELECTRONICS INC. GAMMA reserves the right to make changes without further notice to any products herein.

Information provided herein is alleged to be exact and consistent and this publication surpasses and replaces all information previously supplied.

GAMMA makes no warranty the suitability of its products for any particular purpose, nor does GAMMA assume any liability arising out of the application or use of any product or circuit, and specifically disclaims any and all liability including without limitation special, consequential or incidental damages.

GAMMA products are not authorized for using as critical components in life support devices or systems without prior written approval from GAMMA MICROELECTRONICS INC.

ООО «ЛайфЭлектроникс» “LifeElectronics” LLC

ИНН 7805602321 КПП 780501001 Р/С 40702810122510004610 ФАКБ "АБСОЛЮТ БАНК" (ЗАО) в г.Санкт-Петербурге К/С 30101810900000000703 БИК 044030703

Компания «Life Electronics» занимается поставками электронных компонентов импортного и отечественного производства от производителей и со складов крупных дистрибьюторов Европы, Америки и Азии.

С конца 2013 года компания активно расширяет линейку поставок компонентов по направлению коаксиальный кабель, кварцевые генераторы и конденсаторы (керамические, пленочные, электролитические), за счёт заключения дистрибьюторских договоров

Мы предлагаем:

- *Конкурентоспособные цены и скидки постоянным клиентам.*
- *Специальные условия для постоянных клиентов.*
- *Подбор аналогов.*
- *Поставку компонентов в любых объемах, удовлетворяющих вашим потребностям.*

- *Приемлемые сроки поставки, возможна ускоренная поставка.*
- *Доставку товара в любую точку России и стран СНГ.*
- *Комплексную поставку.*
- *Работу по проектам и поставку образцов.*
- *Формирование склада под заказчика.*

- *Сертификаты соответствия на поставляемую продукцию (по желанию клиента).*
- *Тестирование поставляемой продукции.*
- *Поставку компонентов, требующих военную и космическую приемку.*
- *Входной контроль качества.*
- *Наличие сертификата ISO.*

В составе нашей компании организован Конструкторский отдел, призванный помогать разработчикам, и инженерам.

Конструкторский отдел помогает осуществить:

- *Регистрацию проекта у производителя компонентов.*
- *Техническую поддержку проекта.*
- *Защиту от снятия компонента с производства.*
- *Оценку стоимости проекта по компонентам.*
- *Изготовление тестовой платы монтаж и пусконаладочные работы.*

Тел: +7 (812) 336 43 04 (многоканальный)
Email: org@lifeelectronics.ru

www.lifeelectronics.ru