Cat. No. W139-E1-04

SYSMAC
Programmable Controllers
C1000H/C2000H

INSTALLATION GUIDE

OMRON®

C1000H/C2000H Programmable Controllers

Installation Guide

Revised June 2000

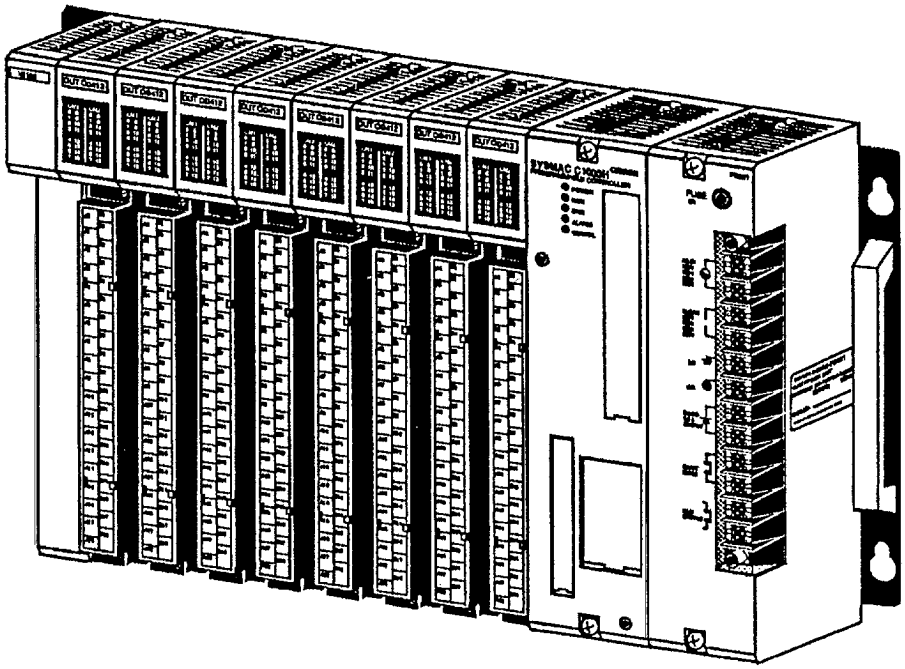

Terms and Conditions of Sale

1. Offer; Acceptance. These terms and conditions (these "Terms") are deemed part of all quotes, agreements, purchase orders, acknowledgments, price lists, catalogs, manuals, brochures and other documents, whether electronic or in writing, relating to the sale of products or services (collectively, the "Products") by Omron Electronics LLC and its subsidiary companies ("Omron"). Omron objects to any terms or conditions proposed in Buyer's purchase order or other documents which are inconsistent with, or in addition to, these Terms.
2. Prices; Payment Terms. All prices stated are current, subject to change without notice by Omron. Omron reserves the right to increase or decrease prices on any unshipped portions of outstanding orders. Payments for Products are due net 30 days unless otherwise stated in the invoice.
3. Discounts. Cash discounts, if any, will apply only on the net amount of invoices sent to Buyer after deducting transportation charges, taxes and duties, and will be allowed only if (i) the invoice is paid according to Omron's payment terms and (ii) Buyer has no past due amounts.
4. Interest. Omron, at its option, may charge Buyer 1-1/2% interest per month or the maximum legal rate, whichever is less, on any balance not paid within the stated terms.
5. Orders. Omron will accept no order less than $200 net billing.
6. Governmental Approvals. Buyer shall be responsible for, and shall bear all costs involved in, obtaining any government approvals required for the importation or sale of the Products.
7. Taxes. All taxes, duties and other governmental charges (other than general real property and income taxes), including any interest or penalties thereon, imposed directly or indirectly on Omron or required to be collected directly or indirectly by Omron for the manufacture, production, sale, delivery, importation, consumption or use of the Products sold hereunder (including customs duties and sales, excise, use, turnover and license taxes) shall be charged to and remitted by Buyer to Omron.
8. Financial. If the financial position of Buyer at any time becomes unsatisfactory to Omron, Omron reserves the right to stop shipments or require satisfactory security or payment in advance. If Buyer fails to make payment or otherwise comply with these Terms or any related agreement, Omron may (without liability and in addition to other remedies) cancel any unshipped portion of Products sold hereunder and stop any Products in transit until Buyer pays all amounts, including amounts payable hereunder, whether or not then due, which are owing to it by Buyer. Buyer shall in any event remain liable for all unpaid accounts.
9. Cancellation; Etc. Orders are not subject to rescheduling or cancellation unless Buyer indemnifies Omron against all related costs or expenses.
10. Force Majeure. Omron shall not be liable for any delay or failure in delivery resulting from causes beyond its control, including earthquakes, fires, floods, strikes or other labor disputes, shortage of labor or materials, accidents to machinery, acts of sabotage, riots, delay in or lack of transportation or the requirements of any government authority.
11. Shipping; Delivery. Unless otherwise expressly agreed in writing by Omron:
    a. Shipments shall be by a carrier selected by Omron; Omron will not drop ship except in "break down" situations.
    b. Such carrier shall act as the agent of Buyer and delivery to such carrier shall constitute delivery to Buyer;
    c. All sales and shipments of Products shall be FOB shipping point (unless otherwise stated in writing by Omron), at which point title and risk of loss shall pass from Omron to Buyer; provided that Omron shall retain a security interest in the Products until the full purchase price is paid;
    d. Delivery and shipping dates are estimates only; and
    e. Omron will package Products as it deems proper for protection against normal handling and extra charges apply to special conditions.
12. Claims. Any claim by Buyer against Omron for shortage or damage to the Products occurring before delivery to the carrier must be presented in writing to Omron within 30 days of receipt of shipment and include the original transportation bill signed by the carrier noting that the carrier received the Products from Omron in the condition claimed.
13. Warranties. (a) Exclusive Warranty. Omron's exclusive warranty is that the Products will be free from defects in materials and workmanship for a period of twelve months from the date of sale by Omron (or such other period expressed in writing by Omron). Omron disclaims all other warranties, express or implied. (b) Limitations. OMRON MAKES NO WARRANTY OR REPRESENTATION, EXPRESS OR IMPLIED, ABOUT NON-INFRINGEMENT, MERCHANTABILITY OR FITNESS FOR A PARTICULAR PURPOSE OF THE PRODUCTS. BUYER ACKNOWLEDGES THAT IT ALONE HAS DETERMINED THAT THE PRODUCTS WILL SUITABLY MEET THE REQUIREMENTS OF THEIR INTENDED USE. Omron further disclaims all warranties and responsibility of any type for claims or expenses based on infringement by the Products or otherwise of any intellectual property right. (c) Buyer Remedy. Omron's sole obligation hereunder shall be, at Omron's election, to (i) replace (in the form originally shipped with Buyer responsible for labor charges for removal or replacement thereof) the non-complying Product, (ii) repair the non-complying Product, or (iii) repay or credit Buyer an amount equal to the purchase price of the non-complying Product; provided that in no event shall Omron be responsible for warranty, repair, indemnity or any other claims or expenses regarding the Products unless Omron's analysis confirms that the Products were properly handled, stored, installed and maintained and not subject to contamination, abuse, misuse or inappropriate modification. Return of any Products by Buyer must be approved in writing by Omron before shipment. Omron Companies shall not be liable for the suitability or unsuitability or the results from the use of Products in combination with any electrical or electronic components, circuits, system assemblies or any other materials or substances or environments. Any advice, recommendations or information given orally or in writing, are not to be construed as an amendment or addition to the above warranty. See http://oeweb.omron.com or contact your Omron representative for published information.
14. Limitation on Liability; Etc. OMRON COMPANIES SHALL NOT BE LIABLE FOR SPECIAL, INDIRECT, INCIDENTAL, OR CONSEQUENTIAL DAMAGES, LOSS OF PROFITS OR PRODUCTION OR COMMERCIAL LOSS IN ANY WAY CONNECTED WITH THE PRODUCTS, WHETHER SUCH CLAIM IS BASED IN CONTRACT, WARRANTY, NEGLIGENCE OR STRICT LIABILITY. Further, in no event shall liability of Omron Companies exceed the individual price of the Product on which liability is asserted.
15. Indemnities. Buyer shall indemnify and hold harmless Omron Companies and their employees from and against all liabilities, losses, claims, costs and expenses (including attorney's fees and expenses) related to any claim, investigation, litigation or proceeding (whether or not Omron is a party) which arises or is alleged to arise from Buyer's acts or omissions under these Terms or in any way with respect to the Products. Without limiting the foregoing, Buyer (at its own expense) shall indemnify and hold harmless Omron and defend or settle any action brought against such Companies to the extent based on a claim that any Product made to Buyer specifications infringed intellectual property rights of another party.
16. Property; Confidentiality. Any intellectual property in the Products is the exclusive property of Omron Companies and Buyer shall not attempt to duplicate it in any way without the written permission of Omron. Notwithstanding any charges to Buyer for engineering or tooling, all engineering and tooling shall remain the exclusive property of Omron. All information and materials supplied by Omron to Buyer relating to the Products are confidential and proprietary, and Buyer shall limit distribution thereof to its trusted employees and strictly prevent disclosure to any third party.
17. Export Controls. Buyer shall comply with all applicable laws, regulations and licenses regarding (i) export of products or information; (iii) sale of products to "forbidden" or other proscribed persons; and (ii) disclosure to non-citizens of regulated technology or information.
18. Miscellaneous. (a) Waiver. No failure or delay by Omron in exercising any right and no course of dealing between Buyer and Omron shall operate as a waiver of rights by Omron. (b) Assignment. Buyer may not assign its rights hereunder without Omron's written consent. (c) Law. These Terms are governed by the law of the jurisdiction of the home office of the Omron company from which Buyer is purchasing the Products (without regard to conflict of law principles). (d) Amendment. These Terms constitute the entire agreement between Buyer and Omron relating to the Products, and no provision may be changed or waived unless in writing signed by the parties. (e) Severability. If any provision hereof is rendered ineffective or invalid, such provision shall not invalidate any other provision. (f) Setoff. Buyer shall have no right to set off any amounts against the amount owing in respect of this invoice. (g) Definitions. As used herein, "including" means "including without limitation"; and "Omron Companies" (or similar words) mean Omron Corporation and any direct or indirect subsidiary or affiliate thereof.

Certain Precautions on Specifications and Use

1. Suitability of Use. Omron Companies shall not be responsible for conformity with any standards, codes or regulations which apply to the combination of the Product in the Buyer's application or use of the Product. At Buyer's request, Omron will provide applicable third party certification documents identifying ratings and limitations of use which apply to the Product. This information by itself is not sufficient for a complete determination of the suitability of the Product in combination with the end product, machine, system, or other application or use. Buyer shall be solely responsible for determining appropriateness of the particular Product with respect to Buyer's application, product or system. Buyer shall take application responsibility in all cases but the following is a non-exhaustive list of applications for which particular attention must be given:
   (i) Outdoor use, uses involving potential chemical contamination or electrical interference, or conditions or uses not described in this document.
   (ii) Use in consumer products or any use in significant quantities.
   (iii) Energy control systems, combustion systems, railroad systems, aviation systems, medical equipment, amusement machines, vehicles, safety equipment, and installations subject to separate industry or government regulations.
   (iv) Systems, machines and equipment that could present a risk to life or property. Please know and observe all prohibitions of use applicable to this Product.
   NEVER USE THE PRODUCT FOR AN APPLICATION INVOLVING SERIOUS RISK TO LIFE OR PROPERTY OR IN LARGE QUANTITIES WITHOUT ENSURING THAT THE SYSTEM AS A WHOLE HAS BEEN DESIGNED TO ADDRESS THE RISKS, AND THAT THE OMRON'S PRODUCT IS PROPERLY RATED AND INSTALLED FOR THE INTENDED USE WITHIN THE OVERALL EQUIPMENT OR SYSTEM.
2. Programmable Products. Omron Companies shall not be responsible for the user's programming of a programmable Product, or any consequence thereof.
3. Performance Data. Data presented in Omron Company websites, catalogs and other materials is provided as a guide for the user in determining suitability and does not constitute a warranty. It may represent the result of Omron's test conditions, and the user must correlate it to actual application requirements. Actual performance is subject to the Omron's Warranty and Limitations of Liability.
4. Change in Specifications. Product specifications and accessories may be changed at any time based on improvements and other reasons. It is our practice to change part numbers when published ratings or features are changed, or when significant construction changes are made. However, some specifications of the Product may be changed without any notice. When in doubt, special part numbers may be assigned to fix or establish key specifications for your application. Please consult with your Omron's representative at any time to confirm actual specifications of purchased Product.
5. Errors and Omissions. Information presented by Omron Companies has been checked and is believed to be accurate; however, no responsibility is assumed for clerical, typographical or proofreading errors or omissions.

Notice:

OMRON products are manufactured for use according to proper procedures by a qualified operator and only for the purposes described in this manual.

The following conventions are used to indicate and classify precautions in this manual. Always heed the information provided with them. Failure to heed precautions can result in injury to people or damage to property.

⚠ DANGER Indicates an imminently hazardous situation which, if not avoided, will result in death or serious injury.

⚠ WARNING Indicates a potentially hazardous situation which, if not avoided, could result in death or serious injury.

⚠ Caution Indicates a potentially hazardous situation which, if not avoided, may result in minor or moderate injury, or property damage.

OMRON Product References

All OMRON products are capitalized in this manual. The word “Unit” is also capitalized when it refers to an OMRON product, regardless of whether or not it appears in the proper name of the product.

The abbreviation “Ch,” which appears in some displays and on some OMRON products, often means “word” and is abbreviated “Wd” in documentation in this sense.

The abbreviation “PC” means Programmable Controller and is not used as an abbreviation for anything else.

Visual Aids

The following headings appear in the left column of the manual to help you locate different types of information.

Note Indicates information of particular interest for efficient and convenient operation of the product.

1, 2, 3... 1. Indicates lists of one sort or another, such as procedures, checklists, etc.

©OMRON, 1988

All rights reserved. No part of this publication may be reproduced, photocopied or recorded, stored in a retrieval system or transmitted in any form or by any means mechanical, electronic, or otherwise, without the prior written permission of OMRON.

No patent liability is assumed with respect to the use of the information contained herein. Moreover, because OMRON is constantly striving to improve its high–quality products, the information contained in this manual is subject to change without notice. Every precaution has been taken in the preparation of this manual; nevertheless, OMRON assumes no responsibility for errors or omissions. Neither is any liability assumed for damages resulting from the use of the information contained in this publication.

TABLE OF CONTENTS

PRECAUTIONS xi

1 Intended Audience xii
2 General Precautions xii
3 Safety Precautions xii
4 Operating Environment Precautions xii
5 Application Precautions xiii

SECTION 1
Introduction 1

1-1 What is a Control System? 2
1-2 The Role of the PC 3
1-3 How Does a PC Work? 5
1-4 Available Manuals 7

SECTION 2
Description of All Components 9

2-1 CPU Rack 10
2-2 CPU Power Supply 13
2-3 I/O Backplane 15
2-4 Expansion I/O Backplane 16
2-5 I/O Power Supply 16
2-6 Duplex Unit (C2000H Duplex) 18
2-7 I/O Control Unit 18
2-8 I/O Interface Unit 18
2-9 File Memory Unit 19
2-10 Space Unit 19
2-11 I/O Remove Unit 19
2-12 I/O Units 20
2-13 Memory Packs 23

SECTION 3
Assembly 25

3-1 Mounting the Units 26
3-2 C2000H Duplex System 29
3-3 C2000H Simplex System 32
3-4 Memory Packs 32
3-5 System Configurations 34

SECTION 4
System Connections 39

4-1 Current Consumption 40
4-2 I/O Connections 43

SECTION 5
Installation Environment 47

5-1 Cooling 48
5-2 Mounting Requirements 48
5-3 Duct Work 50
5-4 Preventing Noise 51

TABLE OF CONTENTS

SECTION 6
Power Considerations **53**

SECTION 7
Safety Considerations **59**

Appendices

A Inspection and Maintenance 63
B Specifications 67
C Standard Models 109

Glossary **117**

Index **121**

Revision History **125**

About this Manual...

This manual explains how to install C1000H and C2000H C-series Programmable Controllers.

Section 1 is an introduction to Programmable Controllers. General information about what a Programmable Controller can do and how a Programmable Controller works is provided.

Section 2 provides a description of all the components of the C1000H and C2000H. The names of all the individual parts of each Unit are given.

Section 3 explains how to assemble the C1000H and C2000H. A detailed description of how to mount each Unit is provided.

Section 4 outlines the system connections involved in installing a C1000H and C2000H Programmable Controller Systems.

Section 5 contains the requirements for the installation environment of the C1000H and C2000H. Suggestions for preventing electrical noise are included.

Section 6 explains the power considerations involved in installing the C1000H and C2000H.

Section 7 lists safety considerations that should be kept in mind while installing the C1000H and C2000H.

Appendixes, a ***Glossary***, and an ***Index*** are also included.

⚠WARNING Failure to read and understand the information provided in this manual may result in personal injury or death, damage to the product, or product failure. Please read each section in its entirety and be sure you understand the information provided in the section and related sections before attempting any of the procedures or operations given.

PRECAUTIONS

This section provides general precautions for using the Wired Remote I/O System and related devices.

The information contained in this section is important for the safe and reliable application of the SYSMAC C1000H/C2000H Programmable Controllers. You must read this section and understand the information contained before attempting to set up or operate the SYSMAC C1000H/C2000H Programmable Controllers.

1 Intended Audience xii
2 General Precautions xii
3 Safety Precautions xii
4 Operating Environment Precautions xii
5 Application Precautions xiii

1 Intended Audience

This manual is intended for the following personnel, who must also have knowledge of electrical systems (an electrical engineer or the equivalent).

- Personnel in charge of installing FA systems.
- Personnel in charge of designing FA systems.
- Personnel in charge of managing FA systems and facilities.

2 General Precautions

The user must operate the product according to the performance specifications described in the relevant manuals.

Before using the product under conditions which are not described in the manual or applying the product to nuclear control systems, railroad systems, aviation systems, vehicles, combustion systems, medical equipment, amusement machines, safety equipment, and other systems, machines, and equipment that may have a serious influence on lives and property if used improperly, consult your OMRON representative.

Make sure that the ratings and performance characteristics of the product are sufficient for the systems, machines, and equipment, and be sure to provide the systems, machines, and equipment with double safety mechanisms.

This manual provides information for programming and operating the Unit. Be sure to read this manual before attempting to use the Unit and keep this manual close at hand for reference during operation.

⚠ WARNING It is extremely important that a PC and all PC Units be used for the specified purpose and under the specified conditions, especially in applications that can directly or indirectly affect human life. You must consult with your OMRON representative before applying a PC system to the above-mentioned applications.

3 Safety Precautions

⚠ WARNING Do not attempt to take any Unit apart while the power is being supplied. Doing so may result in electric shock.

⚠ WARNING Do not touch any of the terminals or terminal blocks while the power is being supplied. Doing so may result in electric shock.

⚠ Caution Tighten the screws on the terminal block of the AC Power Supply Unit to the torque specified in the operation manual. The loose screws may result in burning or malfunction.

⚠ Caution Execute online edit only after confirming that no adverse effects will be caused by extending the cycle time. Otherwise, the input signals may not be readable.

⚠ WARNING Do not attempt to disassemble, repair, or modify any Units. Any attempt to do so may result in malfunction, fire, or electric shock.

4 Operating Environment Precautions

⚠ Caution Do not operate the control system in the following locations:

- Locations subject to direct sunlight.
- Locations subject to temperatures or humidity outside the range specified in the specifications.
- Locations subject to condensation as the result of severe changes in temperature.

- Locations subject to corrosive or flammable gases.
- Locations subject to dust (especially iron dust) or salts.
- Locations subject to exposure to water, oil, or chemicals.
- Locations subject to shock or vibration.

⚠ Caution Take appropriate and sufficient countermeasures when installing systems in the following locations:

- Locations subject to static electricity or other forms of noise.
- Locations subject to strong electromagnetic fields.
- Locations subject to possible exposure to radioactivity.
- Locations close to power supplies.

⚠ Caution The operating environment of the PC system can have a large effect on the longevity and reliability of the system. Improper operating environments can lead to malfunction, failure, and other unforeseeable problems with the PC system. Be sure that the operating environment is within the specified conditions at installation and remains within the specified conditions during the life of the system.

5 Application Precautions

Observe the following precautions when using the PC system.

⚠ WARNING Always heed these precautions. Failure to abide by the following precautions could lead to serious or possibly fatal injury.

- Always ground the system to 100 Ω or less when installing the Units. Not connecting to a ground of 100 Ω or less may result in electric shock.
- Always turn OFF the power supply to the PC before attempting any of the following. Not turning OFF the power supply may result in malfunction or electric shock.
  - Mounting or dismounting I/O Units, CPU Units, Memory Units, or any other Units.
  - Assembling the Units.
  - Setting DIP switches or rotary switches.
  - Connecting cables or wiring the system.
  - Connecting or disconnecting the connectors.

⚠ Caution Failure to abide by the following precautions could lead to faulty operation of the PC or the system, or could damage the PC or PC Units. Always heed these precautions.

- Fail-safe measures must be taken by the customer to ensure safety in the event of incorrect, missing, or abnormal signals caused by broken signal lines, momentary power interruptions, or other causes.
- Interlock circuits, limit circuits, and similar safety measures in external circuits (i.e., not in the Programmable Controller) must be provided by the customer.
- Always use the power supply voltages specified in this manual. An incorrect voltage may result in malfunction or burning.
- Take appropriate measures to ensure that the specified power with the rated voltage and frequency is supplied. Be particularly careful in places where the power supply is unstable. An incorrect power supply may result in malfunction.
- Install external breakers and take other safety measures against short-circuiting in external wiring. Insufficient safety measures against short-circuiting may result in burning.

- Do not apply voltages to the Input Units in excess of the rated input voltage. Excess voltages may result in burning.
- Do not apply voltages or connect loads to the Output Units in excess of the maximum switching capacity. Excess voltage or loads may result in burning.
- Disconnect the functional ground terminal when performing withstand voltage tests. Not disconnecting the functional ground terminal may result in burning.
- Be sure that all the mounting screws, terminal screws, and cable connector screws are tightened to the torque specified in this manual. Incorrect tightening torque may result in malfunction.
- Double-check all wiring and switch settings before turning ON the power supply. Incorrect wiring may result in burning.
- Mount Units only after checking terminal blocks and connectors completely.
- Be sure that the terminal blocks, Memory Units, expansion cables, and other items with locking devices are properly locked into place. Improper locking may result in malfunction.
- Check the user program for proper execution before actually running it on the Unit. Not checking the program may result in an unexpected operation.
- Confirm that no adverse effect will occur in the system before attempting any of the following. Not doing so may result in an unexpected operation.
  - Changing the operating mode of the PC.
  - Force-setting/force-resetting any bit in memory.
  - Changing the present value of any word or any set value in memory.
- Resume operation only after transferring to the new CPU Unit the contents of the DM Area, HR Area, and other data required for resuming operation. Not doing so may result in an unexpected operation.
- Do not pull on the cables or bend the cables beyond their natural limit. Doing either of these may break the cables.
- Do not place objects on top of the cables or other wiring lines. Doing so may break the cables.
- Use crimp terminals for wiring. Do not connect bare stranded wires directly to terminals. Connection of bare stranded wires may result in burning.
- When replacing parts, be sure to confirm that the rating of a new part is correct. Not doing so may result in malfunction or burning.
- Before touching a Unit, be sure to first touch a grounded metallic object in order to discharge any static built-up. Not doing so may result in malfunction or damage.
- Check the direction and polarity of all terminal blocks and connectors before attempting to connect them.

SECTION 1
Introduction

This section provides general information about Programmable Controllers (Systems) and how they fit into a Control System.

1-1 What is a Control System? 2
1-2 The Role of the PC 3
1-2-1 Input Devices 4
1-2-2 Output Devices 4
1-3 How Does a PC Work? 5
1-4 Available Manuals 7

1-1 What is a Control System?

A Control System is the electronic equipment needed to control a particular process. It may include everything from a process control computer, if one is used, to the factory computer, down through the PCs (and there may be many of them networked together), and then on down through the network to the control components: the switches, stepping motors, solenoids, and sensors which monitor and control the mechanical operations.

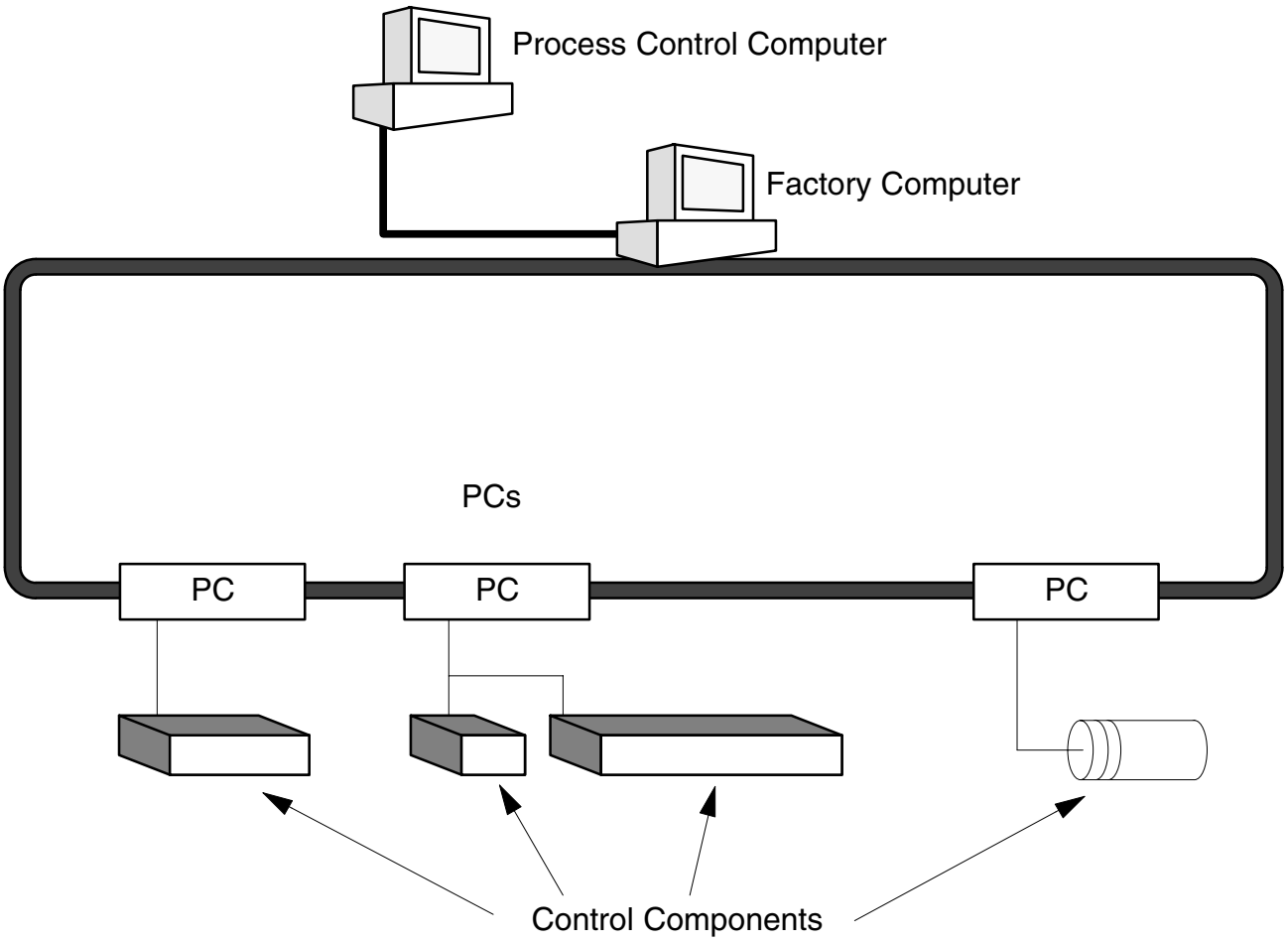

A Control System can involve very large applications where many different models of PC are networked together or it could be an application as small as a single PC controlling a single output device.

A Position Control System

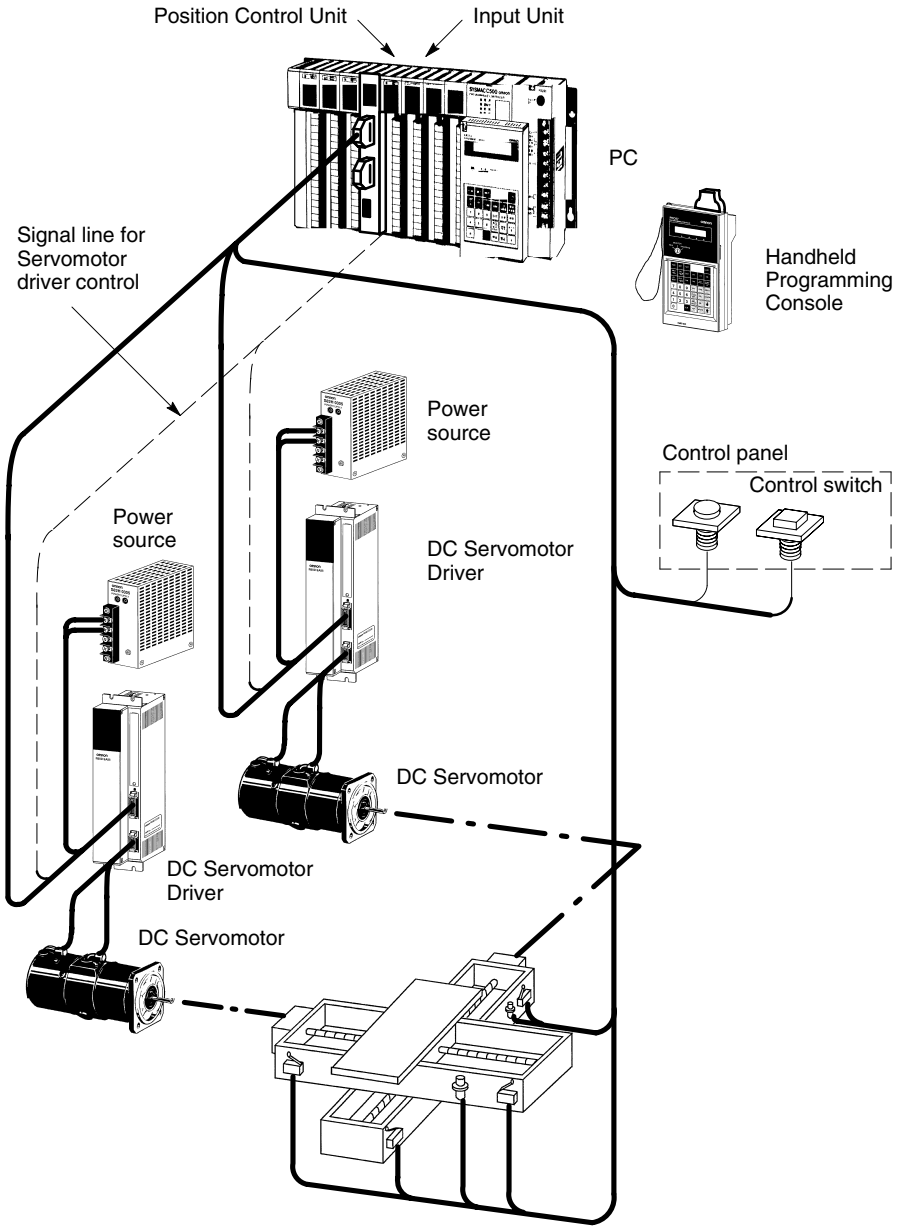

In the typical Control System example shown above, a PC controls the movement of the workpiece bed across two horizontal axes using Limit Switches and Servomotors to monitor and control movement.

1-2 The Role of the PC

The PC is the part of the Control System that directly controls the manufacturing process. According to the program stored in its memory, the PC accepts data from the input devices connected to it, and uses this data to monitor the controlled system. When the program calls for some action to take place, the PC sends data to the output devices connected to it to cause that action to take place. The PC may be used to control a simple, repetitive task, or it may be connected to other PCs, or to a host computer in order to integrate the control of a complex process.

1-2-1 Input Devices

PCs can receive input from either automated or manual devices. The PC could receive data from the user via a pushbutton switch, keyboard, or similar device. Automated input could come from a variety of devices: micro-switches, timers, encoders, photosensors, and so on. Some devices, like the Limit Switch shown below, turn ON or OFF when the equipment actually makes contact with them. Other devices, like the Photoelectric Switch and Proximity Switch shown below, use other means, such as light or inductance, in order to get information about the equipment being monitored.

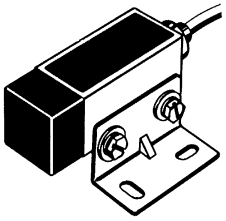

Photoelectric Switch

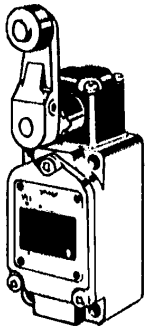

Limit Switch

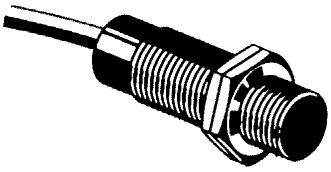

Proximity Switch

1-2-2 Output Devices

A PC can output to a myriad of devices for use in automated control. Almost anything that you can think of could be controlled (perhaps indirectly) by a PC. Some of the most common devices are motors, Solenoids, Servomotors, Stepping Motors, valves, switches, indicator lights, buzzers, and alarms. Some of these output devices, such as the motors, Solenoids, Servomotors, Stepping Motors, and valves, affect the controlled system directly. Others, such as the indicator lights, buzzers, and alarms, provide output to notify personnel.

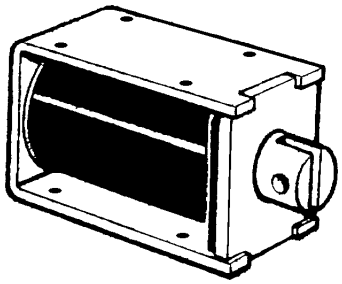

Solenoid

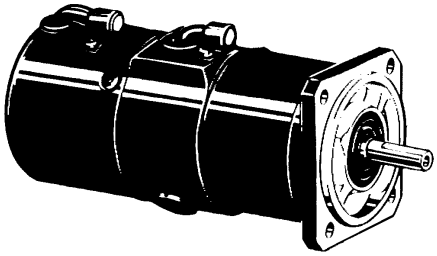

Servomotor

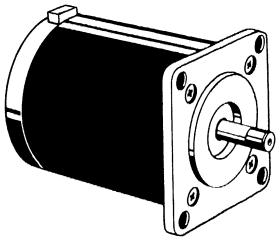

Stepping Motor

1-3 How Does a PC Work?

PCs operate by monitoring input signals and providing output signals. When changes are detected in the signals, the PC reacts, through the user-programmed internal logic, to produce output signals. The PC continually scans the program in its memory to achieve this control.

Block Diagram of PC

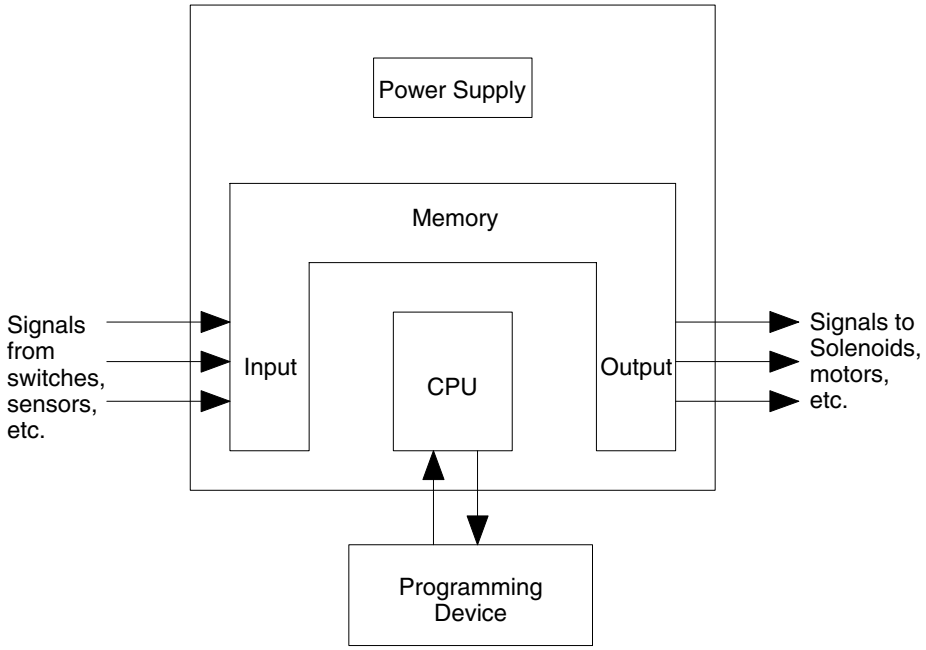

A program for your applications must be designed, and stored in the PC. This program is then executed as part of the cycle of internal operations of the PC.

Scanning Cycle

When a PC operates, that is, when it executes its program to control an external system, a series of operations are performed inside the PC. These internal operations can be broadly classified into the following four categories:

1, 2, 3...

1. Common (or overseeing) processes, such as watchdog timer operation and testing the program memory.
2. Data input and output.
3. Instruction execution.
4. Peripheral device servicing.

Cycle Time

The total time required for a PC to perform all these internal operations is called the cycle time. The flowchart and diagram on the following page illustrate these internal operations for a typical PC.

Timing is one of the most important factors in designing a Control System. For accurate operations, it is necessary to have answers to such questions as these:

- How long does it take for the PC to execute all the instructions in its memory?
- How long does it take for the PC to produce a control output in response to a given input signal?

The cycle time of the PC can be automatically calculated and monitored, but it is necessary to have an understanding of the timing relationships within the PC for effective System design and programming.

PC Operation Flowchart

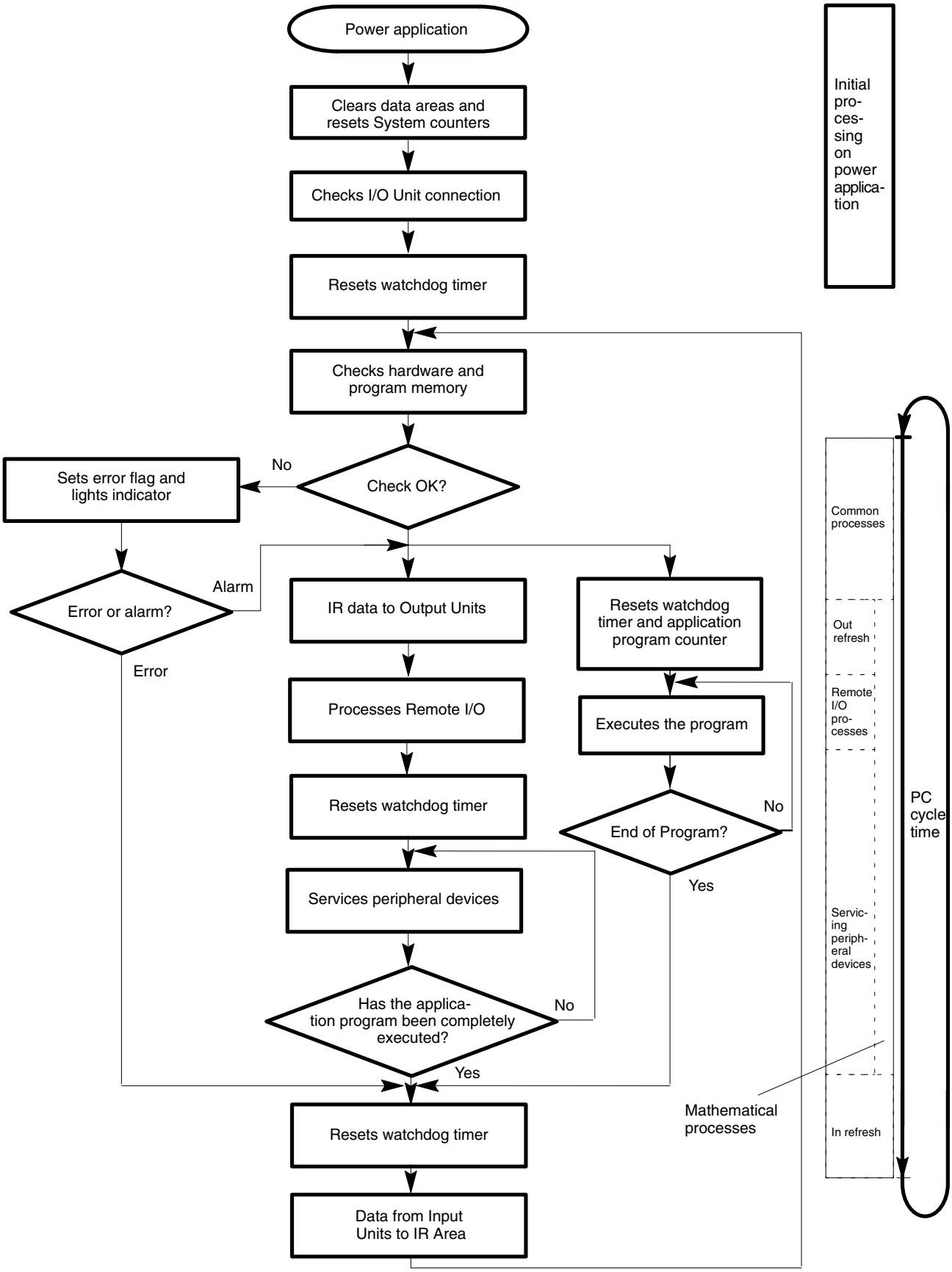

1-4 Available Manuals

The following table lists other manuals that may be required to program and/or operate the C1000H and C2000H. *Operation Manuals* and/or *Operation Guides* are also provided with individual Units and are required for wiring and other specifications.

Name	Cat. No.	Contents
C1000H/C2000H Operation Manual	W140	Software specifications
GPC Operation Manual	W084	Programming procedures for the GPC (Graphics Programming Console)
FIT Operation Manual	W150	Programming procedures for using the FIT (Factory Intelligent Terminal
LSS Operation Manual	W237	Programming procedures for using LSS (Ladder Support Software)
SSS Operation Manuals:		
Basics	W247	Introduction to programming procedures for using SSS (SYSMAC Support Software)
C Series	W248	C-series programming procedures for using SSS (SYSMAC Support Software)
Data Access Console Operation Guide	W173	Data area monitoring and data modification procedures for the Data Access Console
Printer Interface Unit Operation Guide	W107	Procedures for interfacing a PC to a printer
PROM Writer Operation Guide	W155	Procedures for writing programs to EPROM chips
Floppy Disk Interface Unit Operation Guide	W119	Procedures for interfacing a PC to a floppy disk drive
Wired Remote I/O System Manual	W120	Information on building a Wired Remote I/O System to enable remote I/O capability
Optical Remote I/O System Manual	W136	Information on building an Optical Remote I/O System to enable remote I/O capability
PC Link System Manual	W135	Information on building a PC Link System to automatically transfer data between PCs
Host Link System Manual	W143	Information on building a Host Link System to manage PCs from a ‘host’ computer
SYSMAC NET Link System Manual	W114	Information on building a SYSMAC NET Link System and thus create an optical LAN integrating PCs with computers and other peripheral devices
SYSMAC LINK System Manual	W174	Information on building a SYSMAC LINK System to enable automatic data transfer, programming, and programmed data transfer between the PCs in the System

SECTION 2
Description of All Components

This section provides information about the individual Units that make up the C1000H and the C200H Simplex and Duplex Systems. First the names of all the parts of the three systems are given, followed by any details that apply to the Units that make up the PC. For a description of how the Units fit together to become a PC, refer to *Section 3-5 System Configurations*. For information about the model numbers of any of the parts described in this section, refer to *Appendix C Standard Models*.

2-1 CPU Rack 10
2-2 CPU Power Supply 13
2-3 I/O Backplane 15
2-4 Expansion I/O Backplane 16
2-5 I/O Power Supply 16
2-6 Duplex Unit (C2000H Duplex) 18
2-7 I/O Control Unit 18
2-8 I/O Interface Unit 18
2-9 File Memory Unit 19
2-10 Space Unit 19
2-11 I/O Remove Unit 19
2-12 I/O Units 20
2-13 Memory Packs 23

2-1 CPU Rack

The following figures show the names of all the parts of the CPU Racks used in C1000H and C2000H Systems. Note that the Backplanes used for each system are different.

C1000H System

There are seven models of CPU Racks available for C1000H systems. Choose a Backplane with 3, 5 (2 models), 6, 8 (2 models), or 9 I/O slots, depending on your application. Connect the CPU Backplane to an Expansion I/O Rack via the Expansion I/O Connector.

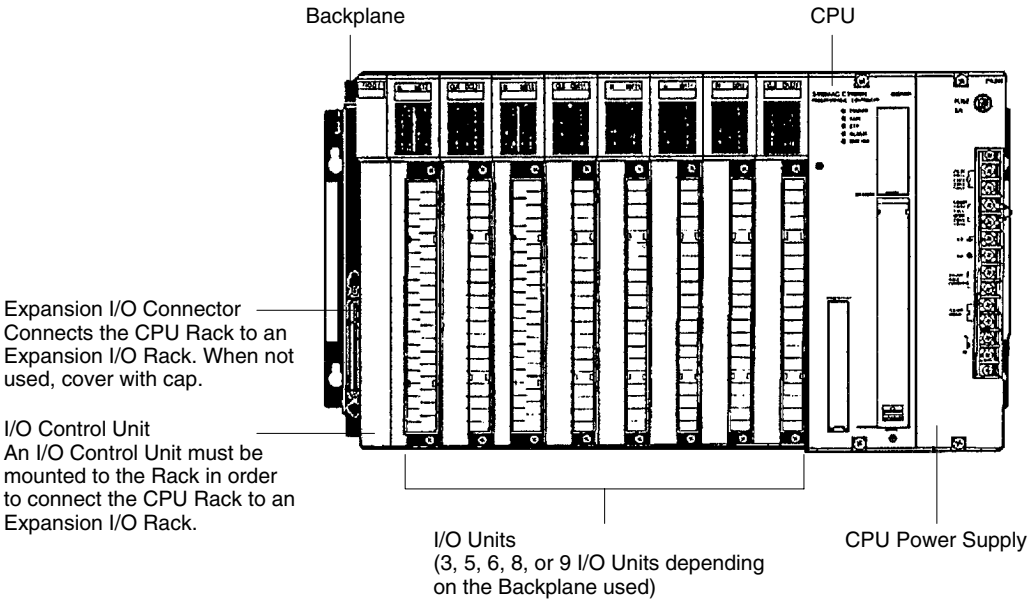

C2000H Simplex System

The C2000H Simplex CPU Rack is different from the C1000H CPU Rack in that there are six slots available for I/O Units rather than eight. The CPU Rack for the Simplex and Duplex Systems have a special slot, to the left of the I/O Units, for an I/O Remove Unit. Connect the CPU Rack to an Expansion I/O Rack via the Expansion I/O connector. For more details concerning the Simplex System, refer to *Section 3-3 C2000H Simplex System*.

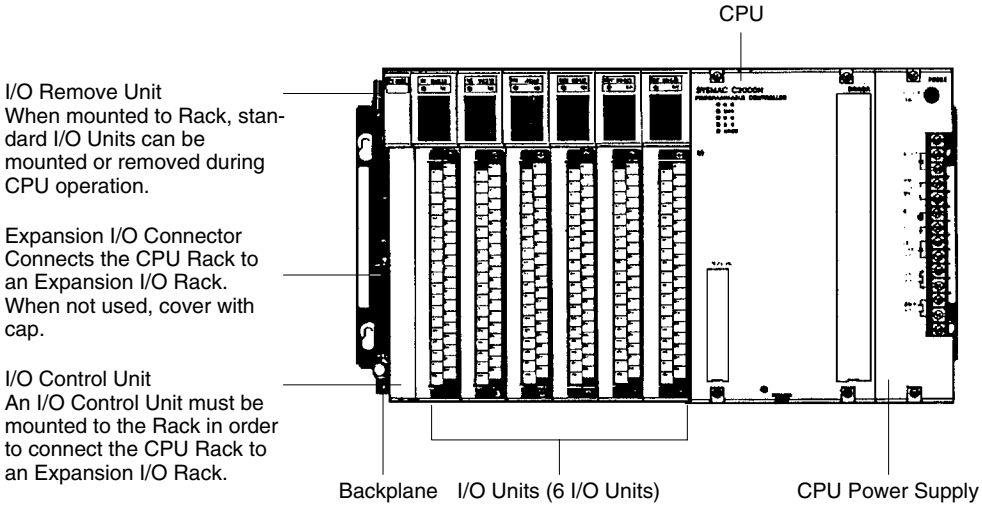

C2000H Duplex System

The C2000H Duplex CPU Rack is different from both the C1000H and C2000H Simplex CPU Racks. The CPU Rack houses two CPUs and a Duplex Unit, learning no room for I/O Units. An additional Rack connected to the CPU Rack via the Expansion I/O Connectors accommodates the I/O Units which would normally be mounted to the CPU Rack. Note that two connecting cables are required to connect the CPU Rack to the accompanying I/O Rack that houses the I/O Units. Just like the Simplex System, the Duplex CPU Rack has a special slot for an I/O Remove Unit, located on the I/O Backplane.

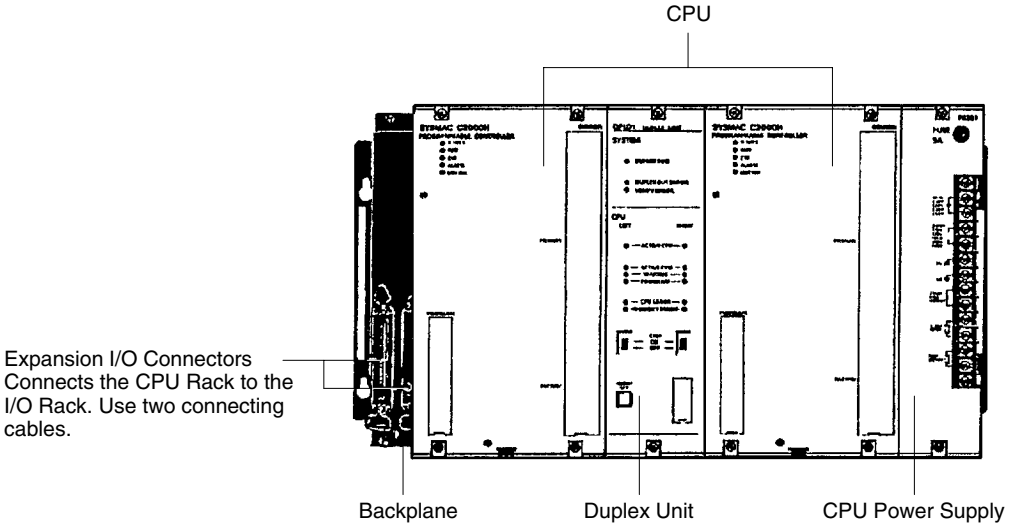

CPU

Two models of CPUs are available. One is used for C1000H Systems and the other is used for C2000H Systems. The figure below shows the CPU that is used with C2000H Duplex and Simplex Systems. The CPUs available for the C1000H/C2000H Systems do not have built-in Power Supplies or Memory Packs. Choose the Power Supply and memory pack suitable for your application.

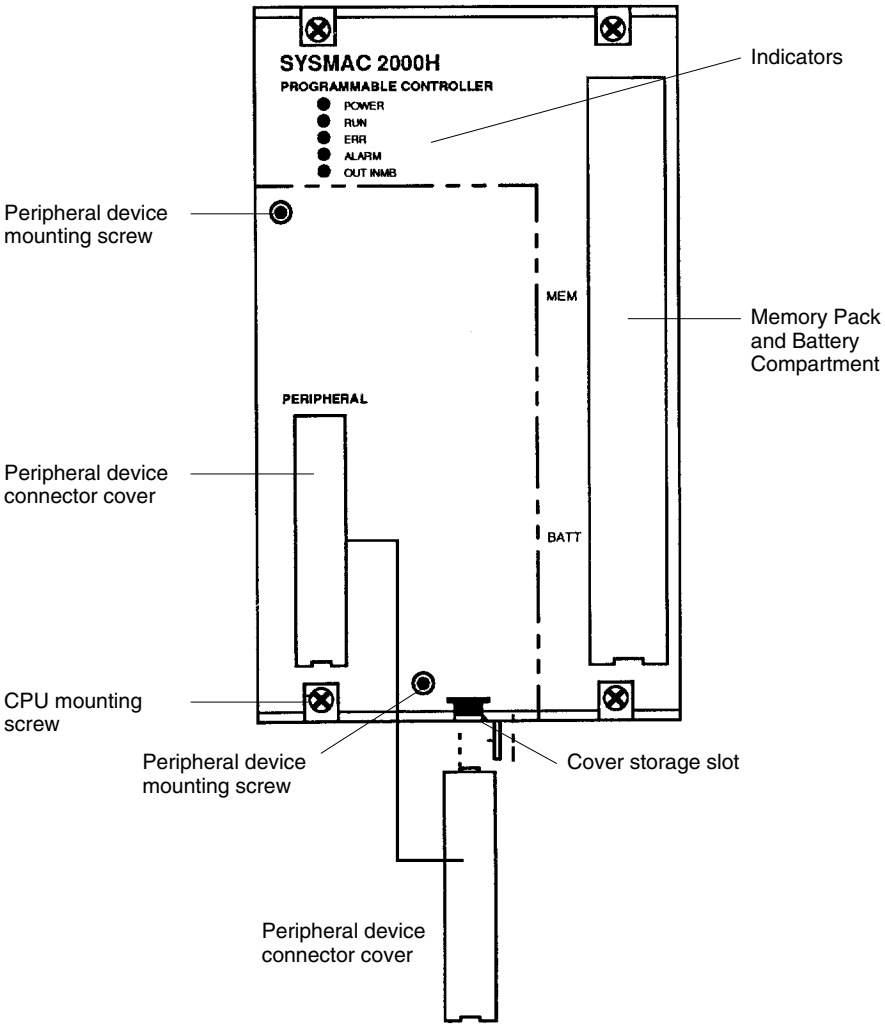

Peripheral Device Connector

The CPU is equipped with one connector for peripheral devices. A peripheral device, such as the CPU-Mounting Programming Console, can be mounted directly to the CPU and does not require a connecting cable. To mount the CPU-Mounting Programming Console or any other peripheral device directly to the CPU, follow these steps:

1, 2, 3...

1. Detach the cover of the peripheral device connector with a standard screwdriver. Insert the detached cover into the cover storage slot provided at the bottom of the CPU.
2. Connect the CPU-Mounting Programming Console to the peripheral device connector.
3. To ensure a positive connection, secure the Programming Console to the CPU by tightening the mounting screws located on the surface of the CPU.

2-2 CPU Power Supply

The CPU Power Supply is mounted to the rightmost slot of the CPU Rack. Three models of Power Supplies are available: 100 to 120 VAC, 200 to 240 VAC, and 24 VDC. Any one of the three models can be used in the C1000H or C2000H Simplex Systems: however, the 3G2A5-PS221-E/PS211-E Power Supplies cannot be used in the C2000H Duplex System. The table below summarizes the output capacity of the three models and the current available for I/O Units mounted on the CPU Rack.

Model	Supply Voltage	Output Capacity	Available Current for I/O Units			24 VDC Output Terminal
			C1000H	C2000H Simplex	C2000H Duplex	
3G2A5-PS221-E	100 to 120/200 to 240 VAC (selectable)	7 A 5 VDC	4 A	3 A	---	Provided
3G2A5-PS223-E		12 A 5 VDC	9 A	8 A	---	Not provided
3G2A5-PS211-E	24 VDC	7 A 5 VDC	4 A	3 A	---	Not provided
C500-PS213-E		9 A 5 VDC	6 A	5 A	---	

Note Be sure to keep the total power consumed by all the Units mounted on a Rack within the value stated in the table above. For example, do not mount I/O Units with a total current consumption of 5 A to a Rack supplied by a 4 A Power Supply. As shown in the table above, the available current for I/O Units is only 5 A. For details concerning current consumption, refer to *Section 4 System Connections*

3G2A5-PS221-E

This Power Supply is used in C1000H and C2000H Simplex Systems.

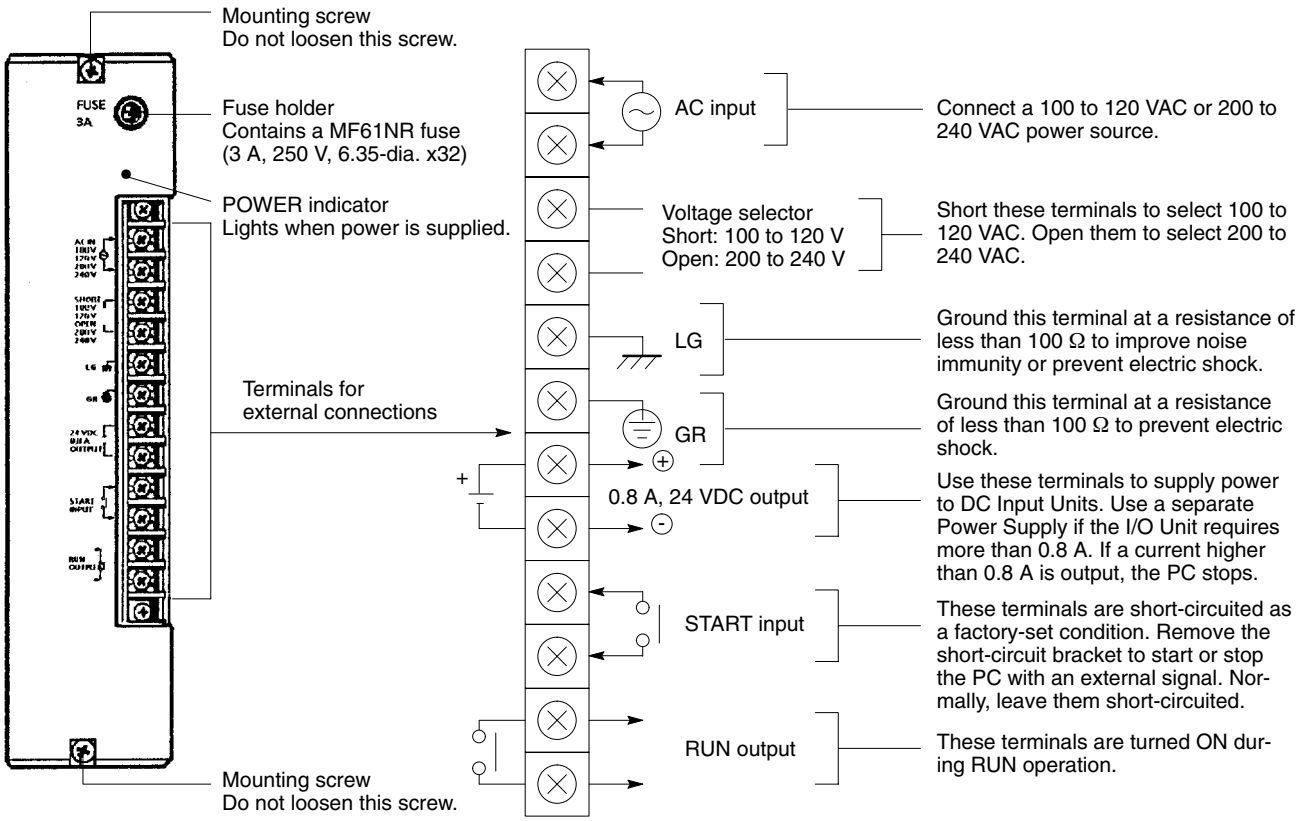

3G2A5-PS223-E This Power Supply is used in C1000H, C2000H Duplex and Simplex Systems.

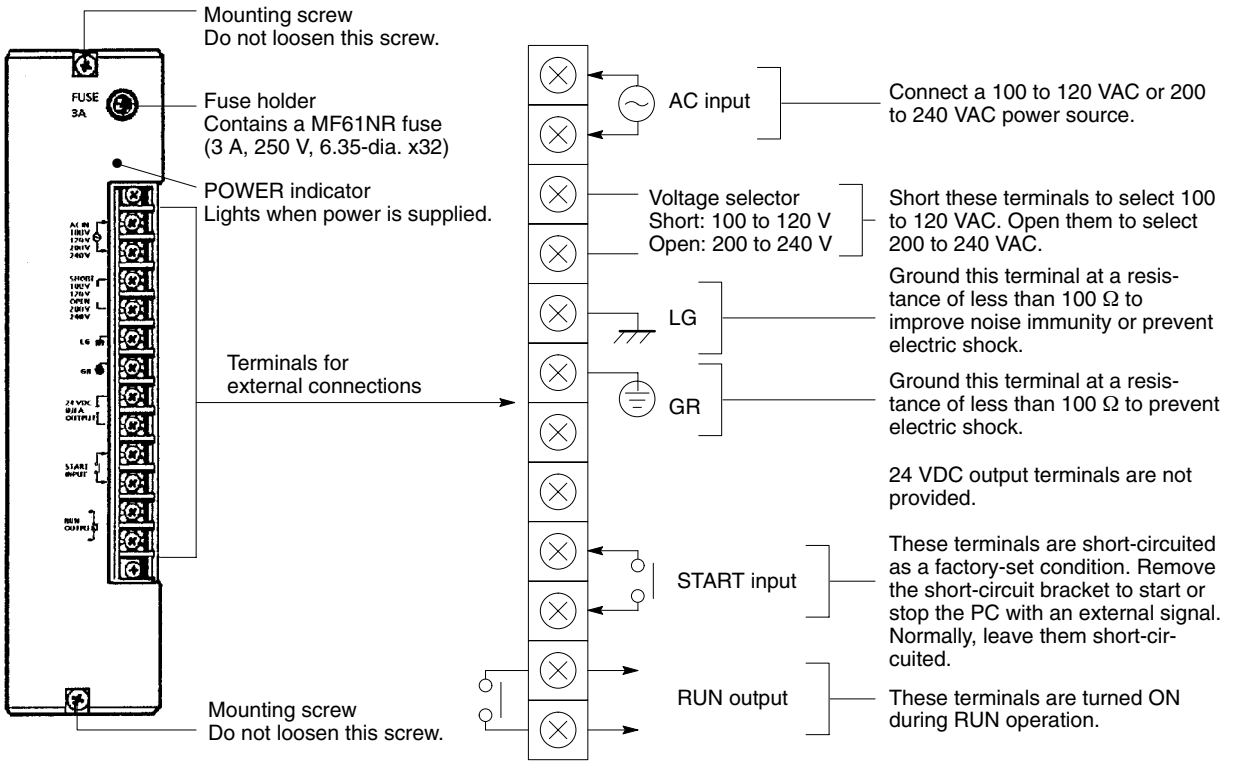

3G2A5-PS211-E
C500-PS213-E This Power Supply is used in C1000H and C2000H Simplex Systems.

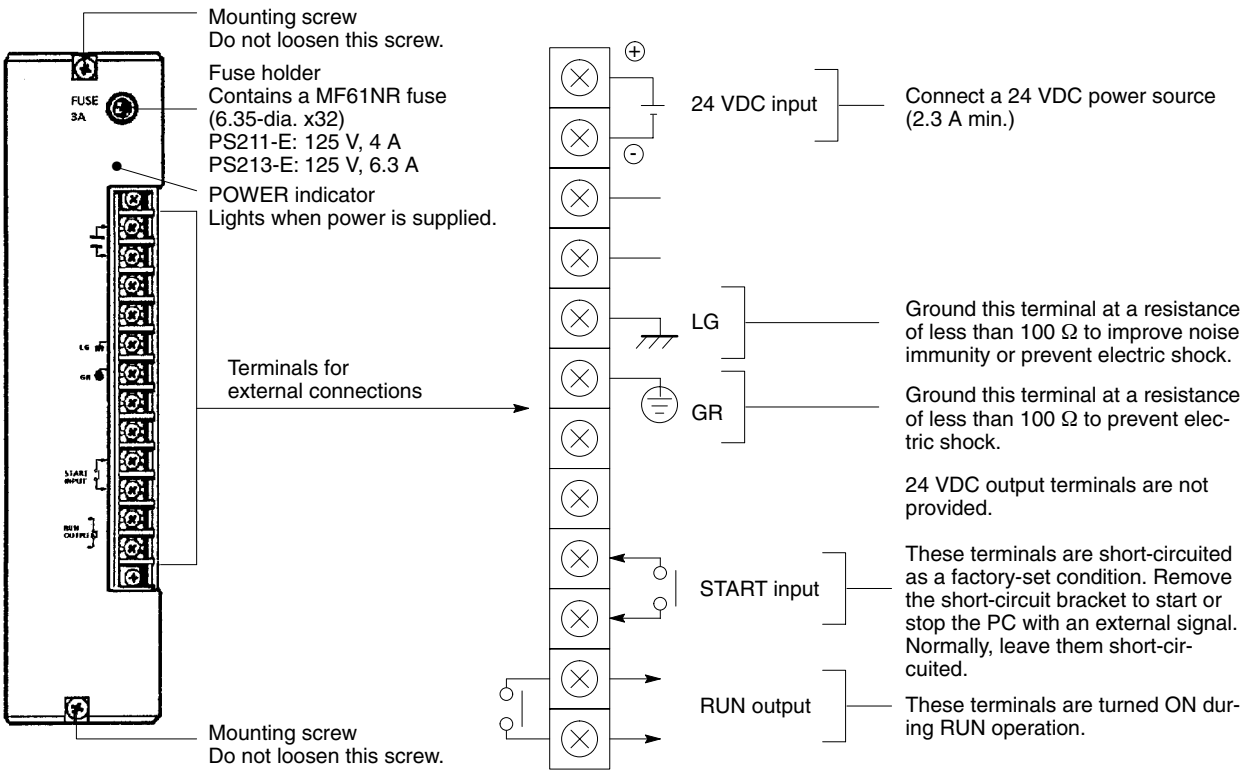

2-3 I/O Backplane

The I/O Backplane is always paired with the CPU Rack in a C2000H Duplex system. The I/O Backplane houses the I/O Units, which cannot be mounted to the CPU Rack. Use two cables to connect the I/O Backplane to the CPU Rack. Two PC Link Units and one Host Link Unit can be mounted to any of the six rightmost slots on the I/O Backplane. Similar to the C2000H CPU Backplane, the I/O Backplane also has a special slot for an I/O Remove Unit. Use one cable to connect the I/O Remove Unit on the I/O Backplane to the I/O Remove Unit on the Expansion I/O Rack.

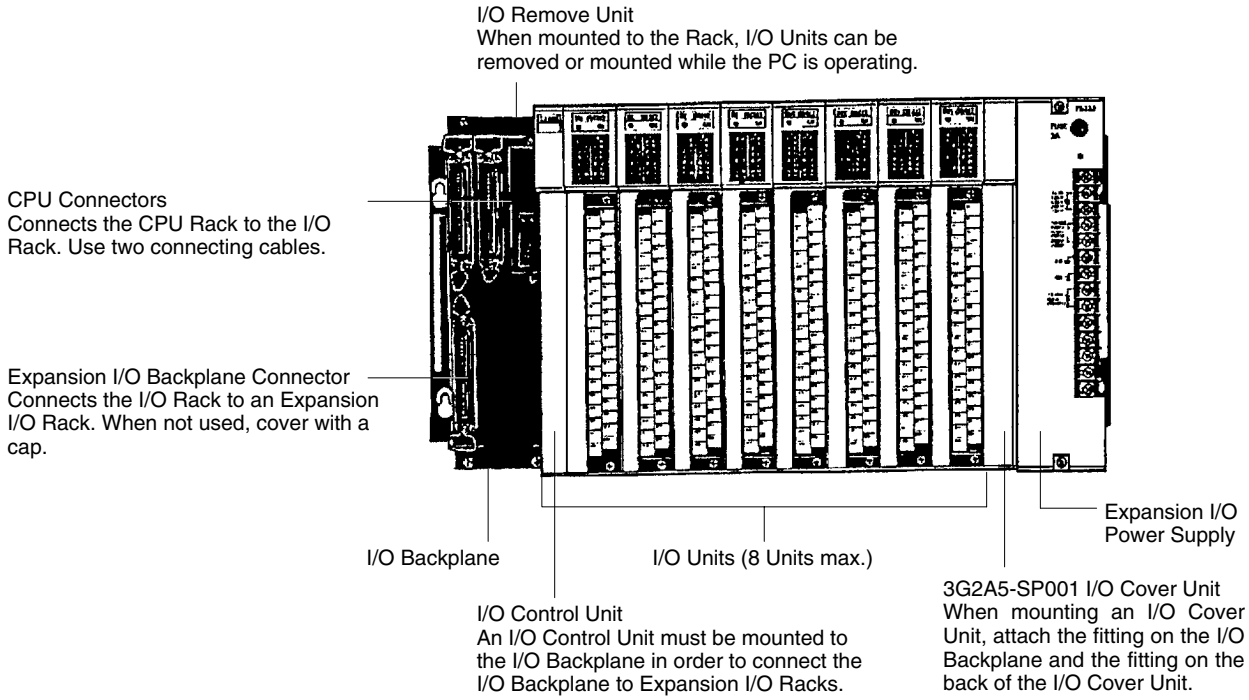

2-4 Expansion I/O Backplane

The Expansion I/O Backplane shown in the following diagram, can be used to expand the C1000H and C2000H Simplex and Duplex Systems. An Expansion I/O Rack is just like a CPU Rack, except a CPU is not mounted. However, a Power Supply is needed for each Expansion I/O Rack. There are three models of Expansion I/O Backplane available. The Expansion I/O Rack shown below can only be used with C2000H Systems. This Backplane has a special slot for the I/O Remove Unit, which allows on-line I/O Unit exchange. two models are available for C1000H PCs, with either five or eight slots.

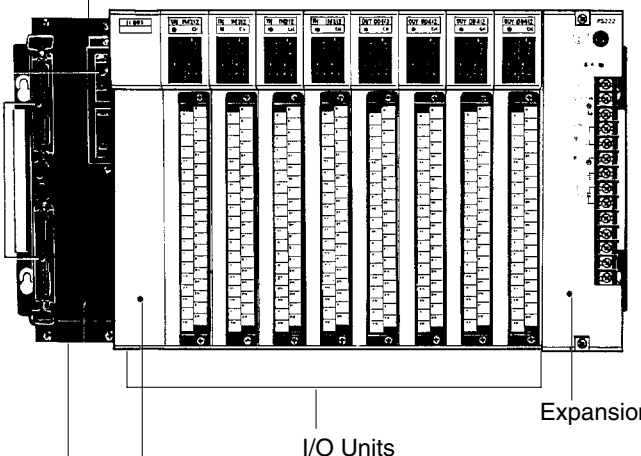

2-5 I/O Power Supply

Just as a Power Supply must be mounted to the CPU Rack, a Power Supply must also be mounted to the I/O Backplane and Expansion I/O Backplanes. There are two Power Supplies available; 100 to 120/200 to 240 VAC and 24 VDC, both of which are explained below. For details, refer to *Appendix B Specifications*. Either Power Supply can be used in the C1000H or C2000H Simplex Systems; however, the 24-VDC Power Supply can not be used in the C2000H Duplex System.

Model	Supply Voltage	Output Capacity	Available Current for I/O Units	24 VDC Output Terminal
3G2A5-PS222-E	100 to 120/200 to 240 VAC (selectable)	7A 5 VDC	6.5 A	Provided
3G2A5-PS212-E	24 VDC	7 A 5 VDC	6.5 A	Not provided

Note Be sure to keep the total power consumed by all the Units mounted on a Rack within the value stated in the table above. For example, do not mount I/O Units with a total current consumption of 7A to a Rack supplied by a 7 A Power Supply. As shown in the table above, the available current for I/O Units is only 6.5 A. For details concerning current consumption, refer to *Section 4 System Connections*.

3G2A5-PS222-E

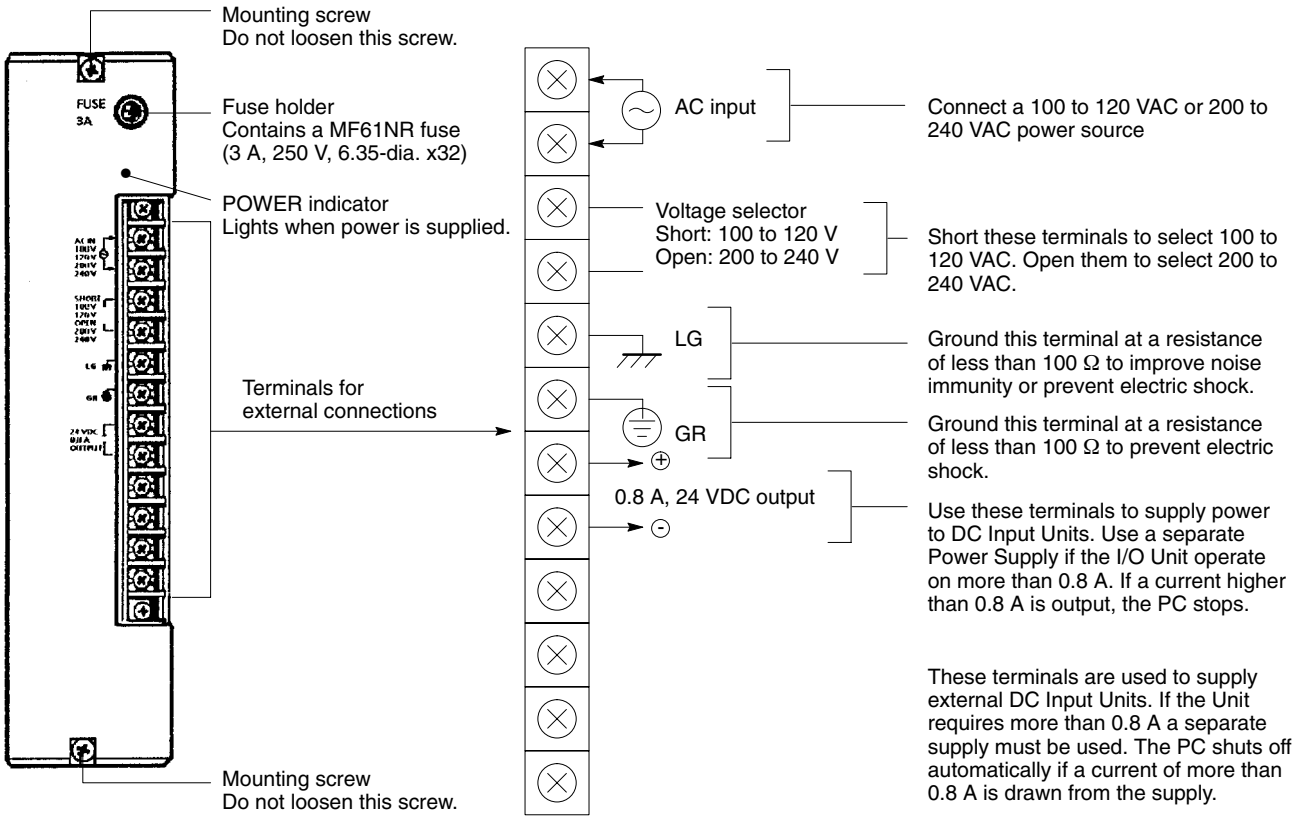

3G2A5-PS212-E

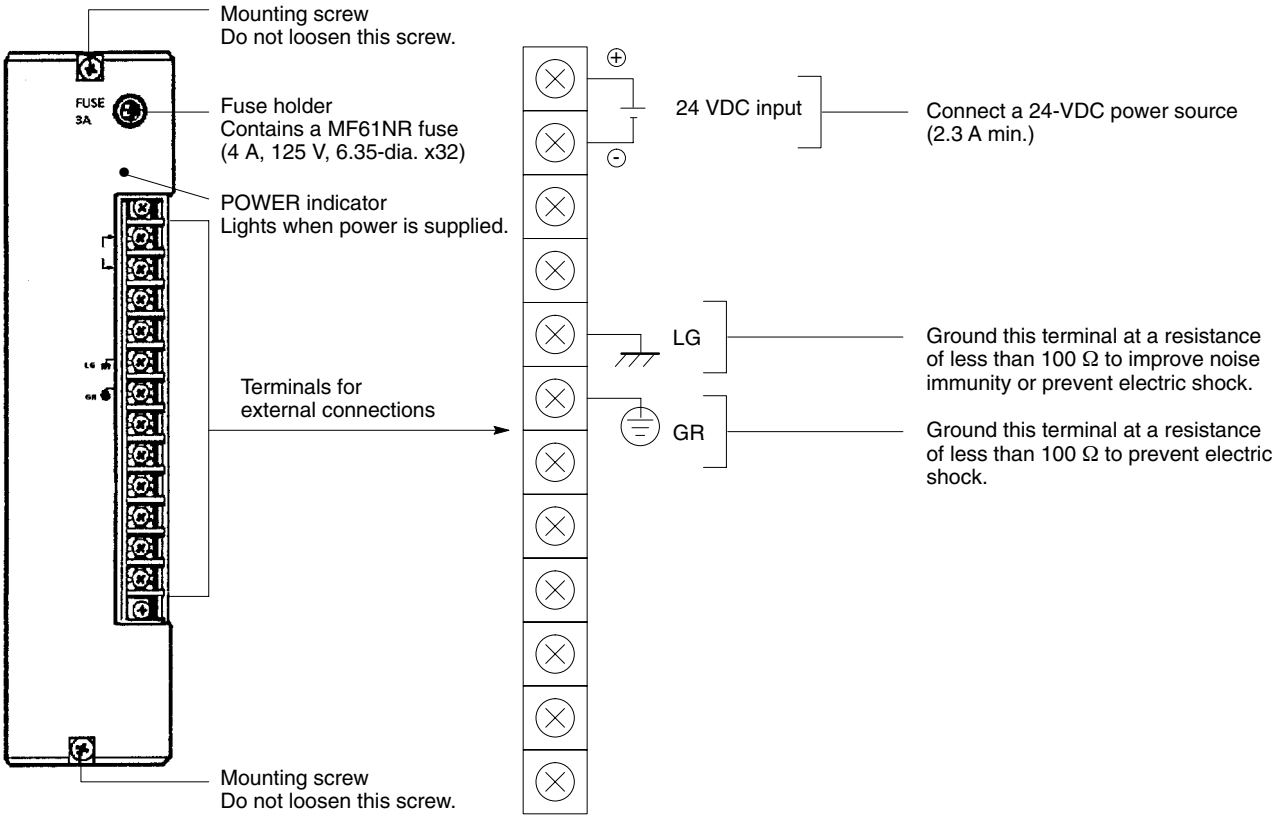

2-6 Duplex Unit (C2000H Duplex)

The Duplex Unit shown below must be mounted to the CPU Rack in order to operate the Duplex System. The following indicators and switches are located on the front panel.

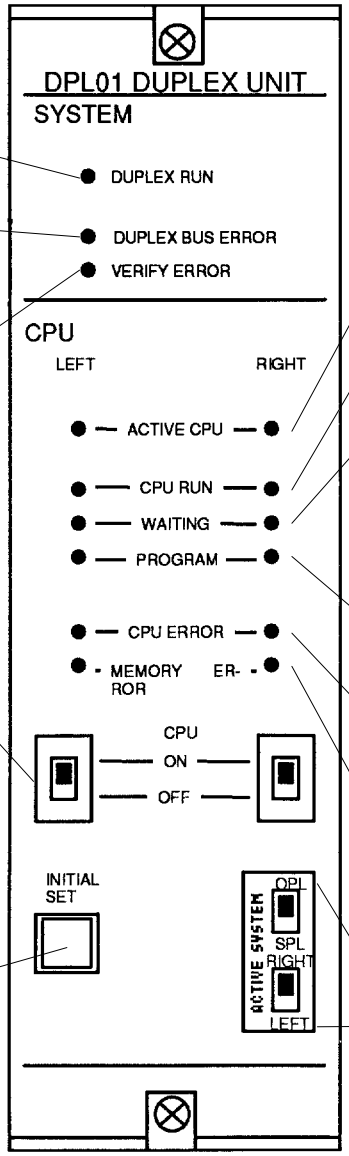

DUPLEX RUN (Green)
Lit during normal duplex operation

DUPLEX BUS ERROR (Red)
Lit if an error occurs in the Duplex System. When a DUPLEX BUS ERROR occurs the active CPU switches the system from a Duplex System to a Simplex System.

VERIFY ERROR (Red)
Lit if the programs in both CPUs are not the same. When a VERIFY ERROR occurs, the active CPU switches the system from a Duplex System to a Simplex System.

CPU ON/OFF switches
Use these switches to supply power to each of the CPUs. To operate the CPU, move the corresponding switch to the ON position. When replacing the CPU, move the corresponding switch to the OFF position, and remove the CPU from the Rack. Note that power is not supplied to the CPU whose corresponding switch is OFF.

INITIAL SET

ACTIVE CPU (Green)
Indicates which CPU is active.

CPU RUN (Green)
Lit when the active CPU is operating normally.

WAITING (Green)
This indicator is lit on three different occasions:
(1) While the program in the Duplex System is being verified (1 to 20 seconds)
(2) When the start input is not applied to the CPU
(3) When there is a failure in starting the Duplex System

PROGRAM (Green)
Lit when both CPUs are in the PROGRAM mode

CPU ERROR (Red)
Lit when an error occurs in the CPU. Operation stops and the RUN indicator is not lit.

MEMORY ERROR
Lit if an error is found in the PC program

ACTIVE SYSTEM

2-7 I/O Control Unit

An I/O Control Unit must be mounted to the CPU Rack in order to connect the CPU Rack to an Expansion I/O Rack. In C1000H and C2000H Simplex Systems, the I/O Control Unit is mounted to the CPU Rack. In the C2000H Duplex System, the I/O Control Unit is mounted to the I/O Rack. An I/O Control Unit can be mounted even if no Expansion I/O Rack is used.

2-8 I/O Interface Unit

An I/O Interface Unit is needed on each Expansion I/O Rack, in order to expand the PC. If there is not an I/O Interface Unit on each Expansion I/O Rack, data communication cannot take place. The I/O Interface Unit is mounted to the left-most I/O position on the Expansion I/O Backplane.

2-9 File Memory Unit

When a File Memory Unit is connected to the PC, contents of the Program Memory and data areas can be transferred to and from File Memory (FM). For details on operating the File Memory Unit, refer to the *C1000H/C2000H Operation Manual*.

The Unit can be mounted to either of the six rightmost slots on the Rack.

2-10 Space Unit

The Space Unit is included with the I/O Backplane to fill the space between the Power Supply and the rightmost Unit mounted on the Backplane. This Unit only applies to the I/O Backplane used in C2000H Duplex Systems. When mounting this Unit be sure to remove the bracket on the Backplane first.

2-11 I/O Remove Unit

The I/O Remove Unit is unique to C2000H Systems. When mounted to a Rack of a C2000H System, the I/O Remove Unit allows standard I/O Units to be removed or mounted while the CPU is operating. The I/O Remove Units on each Rack are connected by an I/O Remove Unit Connecting Cable.

In order to mount an I/O Unit to or remove an I/O Unit from any of the Racks in the PC system, a Programming Console must be used to release the I/O Unit from the control of the CPU. For details, refer to the PC Operation Manual.

Depending on the combination of I/O Units, a failed standard I/O Unit can be replaced without affecting the other Units in the system.

When mounting or removing the I/O Units, the terminal block does not need to be rewired. Simply mount the I/O Unit to the Backplane and then the terminal block to the I/O Unit. When removing the I/O Unit, remove the terminal block first and then remove the I/O Unit from the Backplane.

When an I/O Unit is mounted or removed while the CPU is operating on a Backplane which has an Interrupt Input Unit mounted to it, the Interrupt Input (mounted only to C1000H and C2000H Simplex PCs) will be ignored.

Note

1. Remember that only a standard I/O Unit can be mounted or removed during operation.
2. An I/O Remove Unit must be mounted on every Rack that will require I/O units to be mounted or removed during operation. Even if none of the I/O Units on the CPU Rack will be removed or mounted during operation, an I/O Remove Unit is needed if I/O substitution is to take place on an Expansion I/O Rack connected to the CPU Rack.

Special I/O Units, such as the A/D Conversion Input Unit or the High-speed Counter Unit, cannot be removed or mounted during operation. In addition, if Special I/O Units and standard I/O Units are mounted on the same Rack, none of the Units on that Rack can be removed or mounted without affecting the other Units. However, there are combinations with other I/O Units that allow substitution during PC operation. The following table explains the instances in which standard I/O Units, when used in combination with other I/O Units, can be removed or mounted during PC operation. The groups defined in the table are used only in this section and do not apply to groups of similar nature in other manuals.

Group	I/O Unit	Mounted to 3G2C5-BI082 and 3G2C5-BI083 Backplane
Group A	16-/32-/64-point I/O	When only Units from Group A are mounted to a Backplane the I/O Units can be removed or mounted during PC operation.
Group B	PC Link Unit Host Link Unit	When Units from Group B are mounted on the same Backplane as Units from Group A, only the Units from Group A can be removed or mounted during PC operation. However, this does not apply when using 3G2C5-BI083.
Group C	A/D Conversion Unit D/A Conversion Unit Remote I/O Master Remote I/O Slave Others	When Units from Group C are mounted on the same Backplane as Units from Group A, neither Group a Units nor Group C Units can be removed or mounted during PC operation.

Caution When removing or mounting an I/O Unit while the CPU is operating, be sure to remove the terminal block from the I/O Unit first and then remove the I/O Unit from the Backplane. If the entire I/O Unit is removed from the Backplane, output signals are not cleanly disconnected, but may be sent to external devices, causing a sudden pulse to go the external device. This may in turn cause the device to shudder. Also, when remounting the I/O Unit to the Backplane, fir st mount the I/O unit and then the terminal Block to the I/O Unit.

2-12 I/O Units

I/O Units come in 5 shapes; A-shape, B-shape, C-shape, D-shape, and E-shape. Refer to *Appendix B Specifications* for the dimensions of each Unit.

A-shape

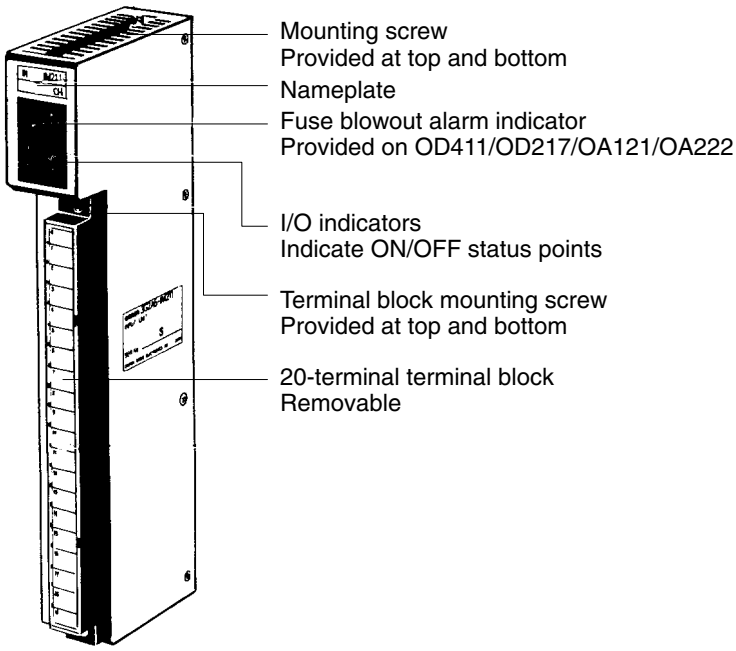

B-shape

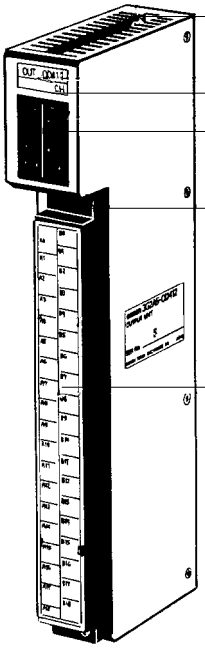

C-shape

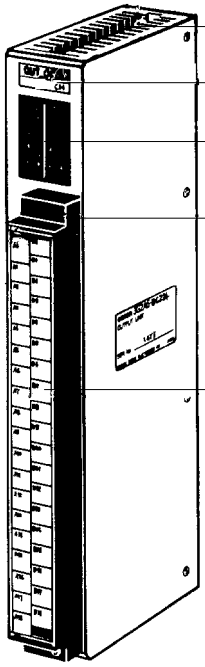

D-shape

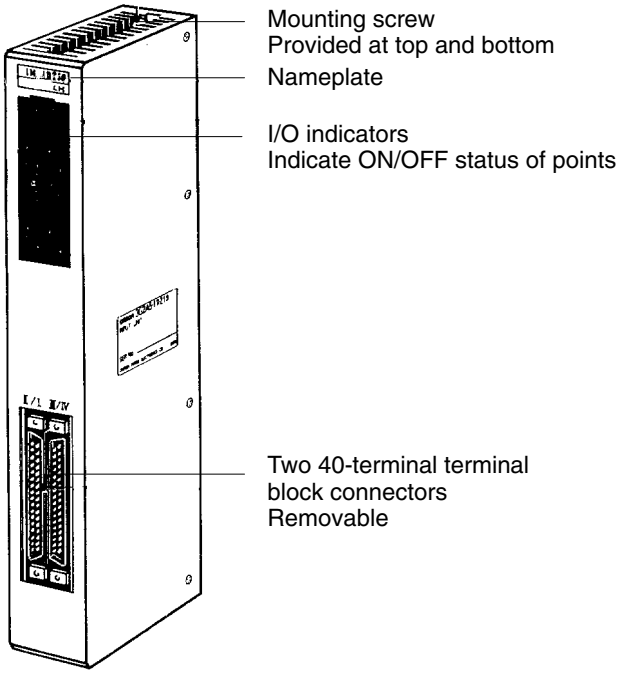

E-shape

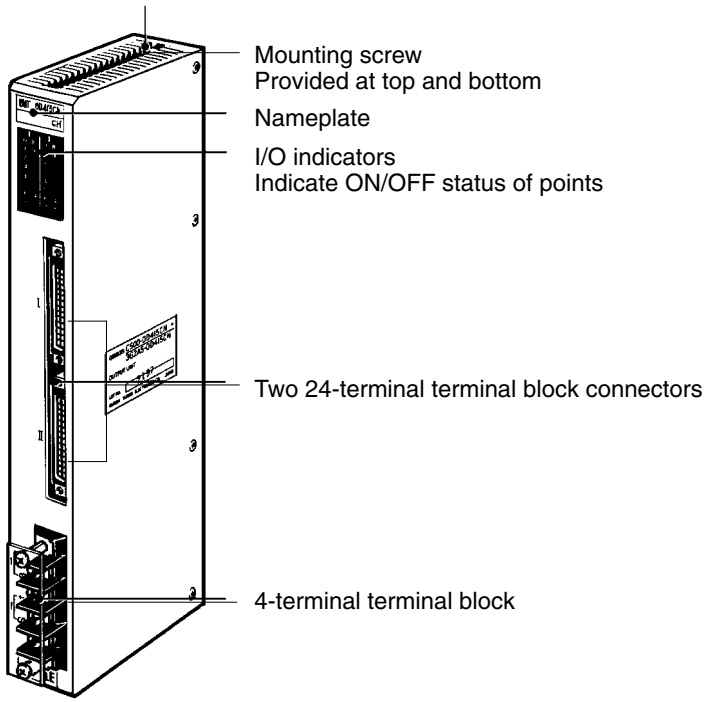

2-13 Memory Packs

The Memory Pack fits into the slot located on the right side of the CPU. Because the Memory Pack is not provided with the PC upon delivery, a Memory Pack must be selected and installed in the CPU. There are two Memory Packs available, either RAM or ROM, that can be used for both the C1000H and C2000H Systems.

Note Mount a Memory Pack to the CPU on the left and another Memory Pack to the CPU on the right. These Memory Packs must have the same specifications. When using the RAM Pack, there must not be any difference in write-protect switch settings for the left and right CPUs, otherwise a collation error will result and the PC will not operate.

RAM Pack

Data can be randomly written to and read from the RAM Pack, making it possible to enter your own program into the CPU. However, because this is not a fixed program, the memory of the RAM Pack is erased when power is not supplied to the CPU or when the RAM Pack is removed from the CPU without first being connected to a backup battery.

⚠ Caution

1. When removing the RAM Pack from the CPU, be sure to connect the RAM Pack to a backup battery **before** removing it from the CPU or the data will be lost. **Do not** use the backup battery located in the compartment above the Memory Unit Compartment. It is used to backup memory in the CPU.
2. Do not remove the battery in the CPU when the RAM Pack has been removed from the CPU.

There is a write-protect switch and a write-protect indicator on the RAM Pack, as shown in the following diagram. Setting the write-protect switch to OFF allows data to be written to the RAM Pack. Use a peripheral device, such as a Programming Console, to write to the RAM Pack.

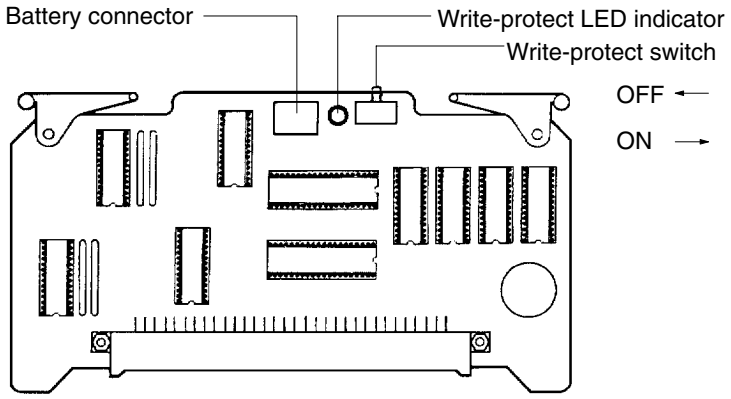

RAM Pack

To write data to the RAM Pack, move the write-protect switch to the OFF position. After data is written to the RAM Pack, be sure to move the write-protect switch to the ON position to protect the data from further alterations. If you try to write data to the Memory Pack while the write-protect switch is in the ON position, the message DISABLED ROM will appear on the Programming Console.

Four models of RAM Packs are available, which vary in memory capacity: 8K, 16K, 24K, and 32K words. Refer to *Appendix C Standard Models* for model numbers.

ROM Pack

Data contained in the ROM Pack is stored on EPROM chips and cannot be altered or erased during the CPU's operation. The ROM Pack can accept four EPROM chips, which can be programmed for your particular application with the PROM Writer. The EPROM chip is mounted to the Memory Pack and the entire pack is installed in the CPU. Once the data is written to the chip the data will not be lost when the power to the PC is OFF.

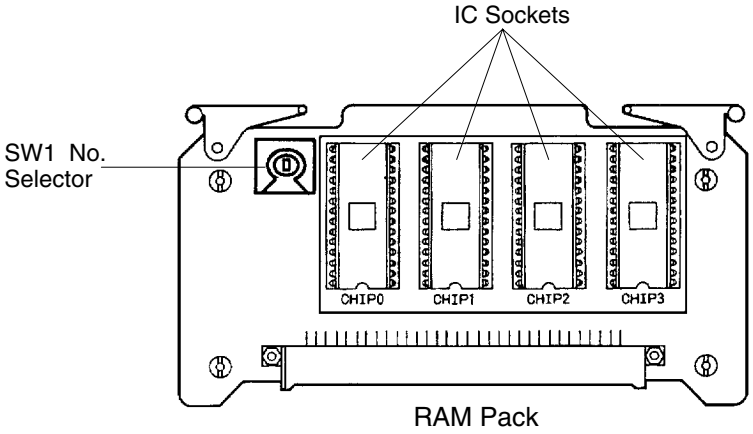

SECTION 3
Assembly

When we speak of a PC, we usually think of it as a single object. But actually even the simplest PCs are usually composed of several different devices. In fact a single PC can be physically spread throughout a building, but we still call it one PC.

In this section, we will start with a Backplane and use all the Units discussed in Section 2 to build a PC.

3-1 Mounting the Units 26
3-2 C2000H Duplex System 29
3-3 C2000H Simplex System 32
3-4 Memory Packs 32
3-5 System Configurations 34

3-1 Mounting the Units

There is no single Unit that can be said to constitute a Rack PC. To build a Rack PC, we start with a Backplane. The Backplane for the C1000H/C2000H is shown below.

C1000H/C2000H Backplane

The Backplane is a simple device having two functions. The first is to provide physical support for the Units to be mounted to it. The second is to provide the connectors and electrical pathways necessary for connecting the Units mounted to it.

The first device we will add to the Backplane is a Power Supply. The Power Supply fits into the rightmost position on the Backplane and provides electricity at the voltages required by the other Units of the PC. It can also be used to power devices other than the PC if necessary.

The core of the PC is the CPU. The CPU contains the program consisting of the series of steps necessary for the control task. The CPU fits into the position directly to the left of the Power Supply.

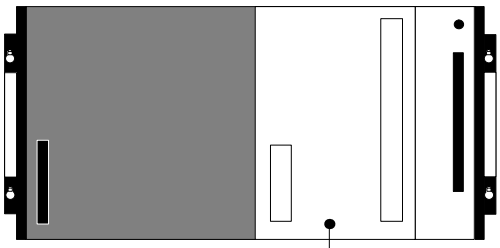

Unlike the CPU of the Package-type PC, the CPU of the Rack PC has no I/O points built in. So, in order to complete this kind of PC we need to mount one or more I/O Units to the Backplane. Mount the I/O Units to the Backplane by pressing the I/O Unit firmly into position, making sure the connectors are properly mated. Secure the Unit by tightening the mounting screws located on the top and bottom of the Unit.

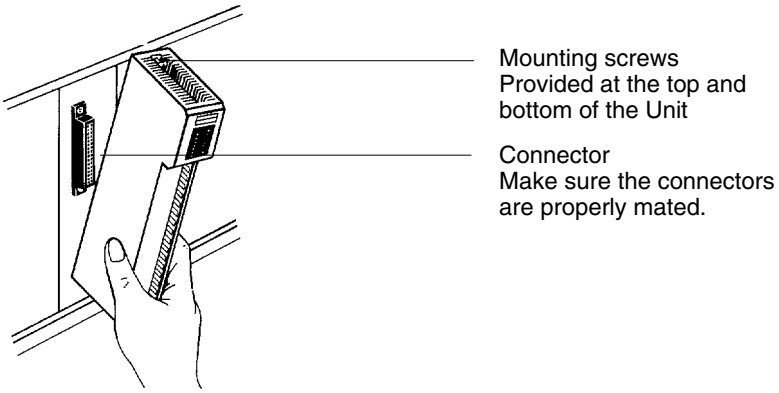

The figure below shows one I/O Unit mounted directly to the left slot of the CPU Rack.

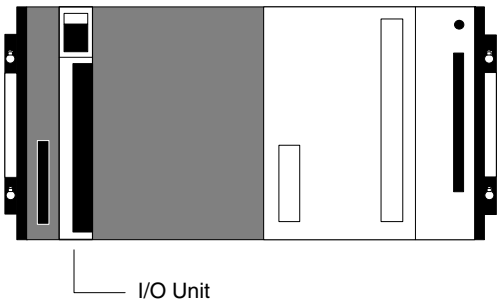

I/O Units are where the control connections are made from the PC to all the various input devices and output devices. As you can see from the figure, there is still some space available on the right side of the I/O Unit. This space is for any additional I/O Units that may be required.

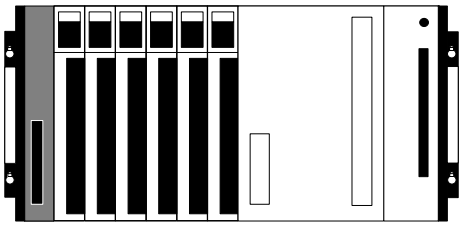

The figure above shows a total of six I/O Units mounted to the Backplane. Backplanes are available in different lengths, and can hold a different number of I/O Units accordingly. Of course, not all I/O Units look exactly alike, but the ones in the figure show their typical appearance. This configuration of Backplane, Power Supply, CPU, and I/O Units is called a CPU Rack. This term refers to the Backplane and all the Units mounted to it. However, if we want to include more than six I/O Units in our configuration we can add an additional Backplane. First, though, we have to mount an I/O Control Unit to the leftmost slot of the CPU Rack.

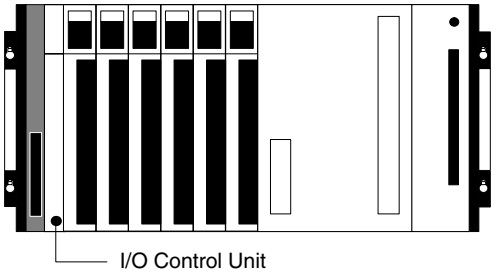

Now we can use a cable to connect the CPU Rack to another Backplane. This Backplane has a Power Supply and I/O Units mounted to it, but it has no CPU of its own. The additional Backplane must also have an I/O Interface Unit mounted to its leftmost position. This configuration of additional Backplane, Power Supply, I/O Units, and I/O Interface Unit is called an Expansion I/O Rack.

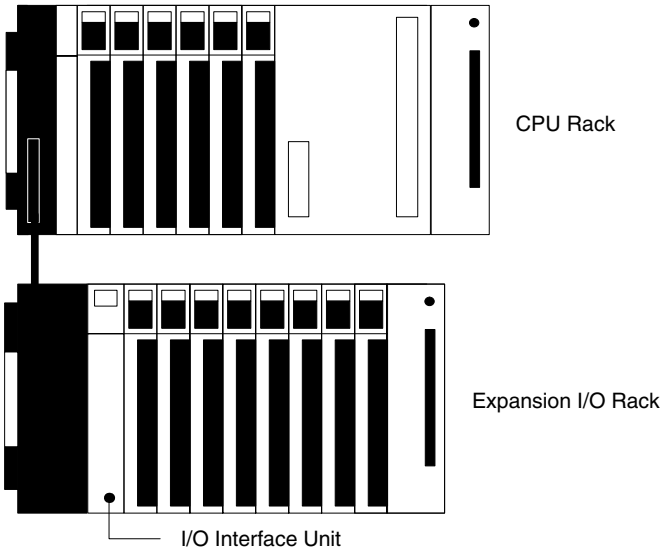

The CPU Rack and Expansion I/O Rack shown above are connected by a cable. Remember that this whole configuration is still referred to as one PC. It is possible to keep adding Expansion I/O Racks in this way until the maximum number of I/O points for the system is reached. Each Expansion I/O Rack needs an I/O Interface Unit.

3-2 C2000H Duplex System

The C2000H has a unique feature. The C2000H lets you build a PC that uses two CPUs. This is called a Duplex System. Either CPU, which is mounted to the CPU Rack, is capable of assuming the system function. One CPU controls the system while the other CPU assumes a standby status. Consequently, if a failure occurs in one of the CPUs, the other CPU can take over the system function, preventing the entire system from halting, The figure below shows a Duplex System. Note that the CPU Rack is connected to the I/O Rack by two cables.

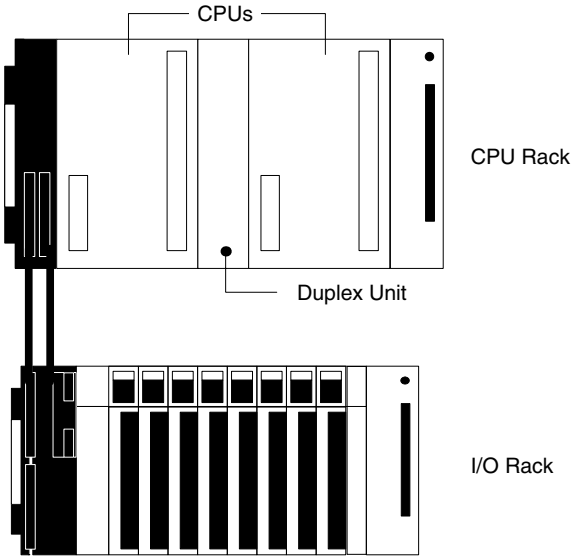

While the Duplex System is in operation, one of the two CPUs has “active” status and the other CPU has “standby” status. The active CPU executes the program and controls the I/O Units while the standby CPU merely executes the program, but does not control the I/O Units. The status of the CPUs can be determined by setting the selector switch on the front panel of the Duplex Unit.

If an error occurs in the active CPU, making further operation impossible, the standby CPU automatically becomes active and takes over operation. The failed CPU can be repaired or replaced without having to shut down the entire CPU.

Operating Mode

The operating mode is set through the active CPU. Once the operating mode of the active CPU is set, the standby CPU is automatically set in same operating mode as the active CPU.

Peripheral Devices

As mentioned, the operating mode can only be set through the active CPU. However, peripheral devices such as the Programming Console can be mounted to the standby CPU to monitor operations.

Initial Settings

Take the following steps to prepare the Duplex System for operation.

1, 2, 3...

1. Be sure to install identical Memory Packs in both CPUs. Because one of the CPUs in the Duplex System acts as a standby system, make sure that identical Memory Packs are installed in both CPUs. IF the active CPU can no longer control the system, the standby CPU can take over the System using an identical program.

   ROM Packs When using ROM Packs, make sure that the same number and same type of EPROM chips are mounted to both ROM Packs. In addition, the same program must be written to both ROM Packs.

   RAM Packs When using RAM Packs, make sure the Units have the same memory capacity. Write the program to the RAM Unit installed in the active CPU. The program written to the active CPU is automatically written to the memory of the standby CPU when the Duplex System is put into operation.

Note All information previously stored in the RAM Pack of the standby CPU will be erased when a new program is written to the RAM Pack of the active CPU.

2. Set the System Switch, located on the front panel of the Duplex Unit, to DPL (Duplex System) or SPL (Simplex System). As shown below, the switch is set to DPL to indicate a Duplex System.

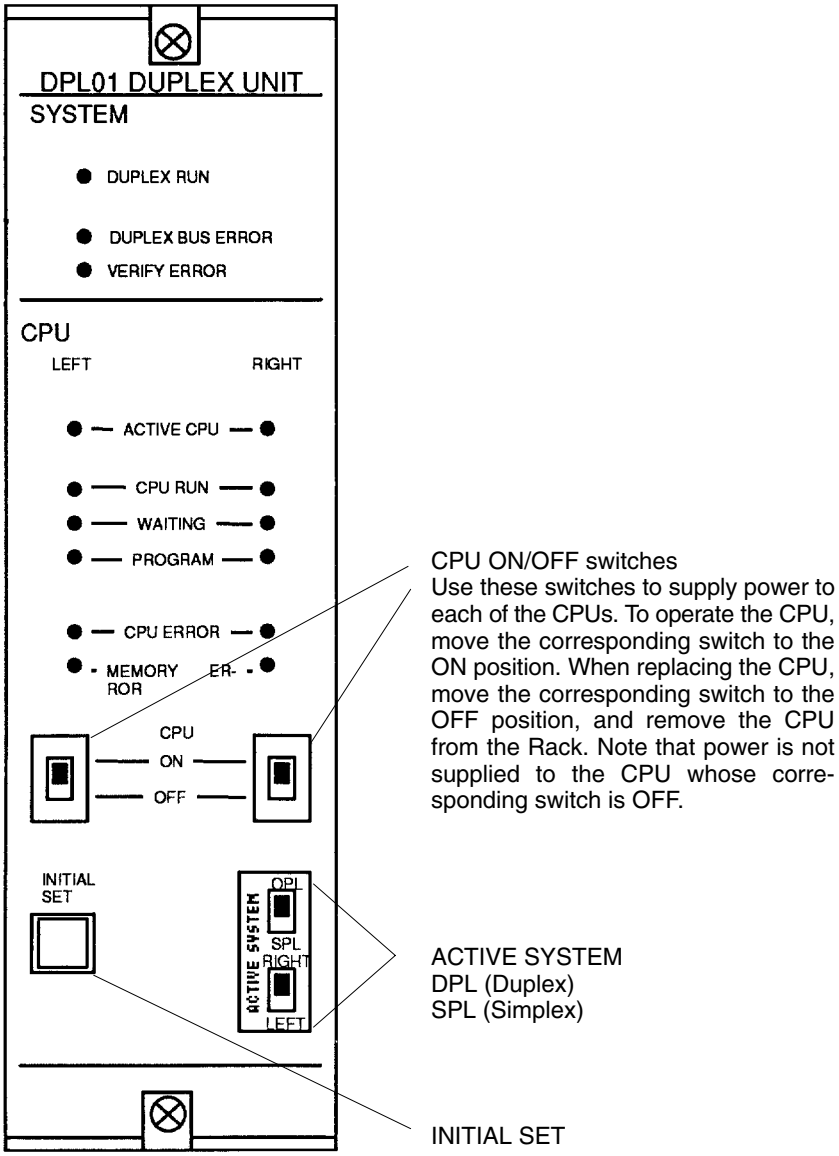

3. Next, select the active CPU by setting the Active Switch to RIGHT or LEFT. In the example above, the right CPU is the active CPU.
4. To complete the initial settings, set both CPU ON/OFF selectors on the front panel of the Duplex Unit to the ON position. If both CPU selectors are not in the ON position, the Duplex System cannot operate.

When an Error Occurs in the Duplex System

When the Duplex System is put into operation, both CPUs are in the ON position and an active CPU, either the right CPU or the left CPU, is selected. A Duplex System is a control system with two operable CPUs, an active CPU and a standby CPU, either of which can take over system operation at any time. However, if an error occurs causing one of the CPUs to fail, the system automatically changes to a Simplex System, regardless of the switch settings on the front panel of the Duplex Unit. For example, if an error occurs in the standby CPU causing

it to be inoperable, it can no longer be a Duplex System and therefore automatically changes to a Simplex System, with only the active CPU controlling the system.

If there is an error that causes the active CPU to fail, the system again automatically changes to a Simplex System, switching control to the operable CPU (the standby CPU). For example, the switches on the front panel of the Duplex Unit indicate that the right CPU is active and controlling the I/O Units in a Duplex System. If the active CPU fails, the system changes from a Duplex System to a Simplex System and the operable standby CPU (in this example, the left CPU) takes over the system operation and becomes the active CPU. The change from Duplex to Simplex and from active CPU to standby CPU takes place regardless of the settings on the front panel of the Duplex Unit.

Switching from Duplex to Simplex

If you are using a Duplex System but want to use only one CPU to write a program to the memory of the CPU or test the program in the CPU, switch the Duplex System to a Simplex System.

The flow chart below illustrates how the Duplex System can be changed to Simplex operation. The switches referred to in the flow chart are on the front panel of the Duplex Unit. Assume that there is a Programming Console already mounted to the active CPU.

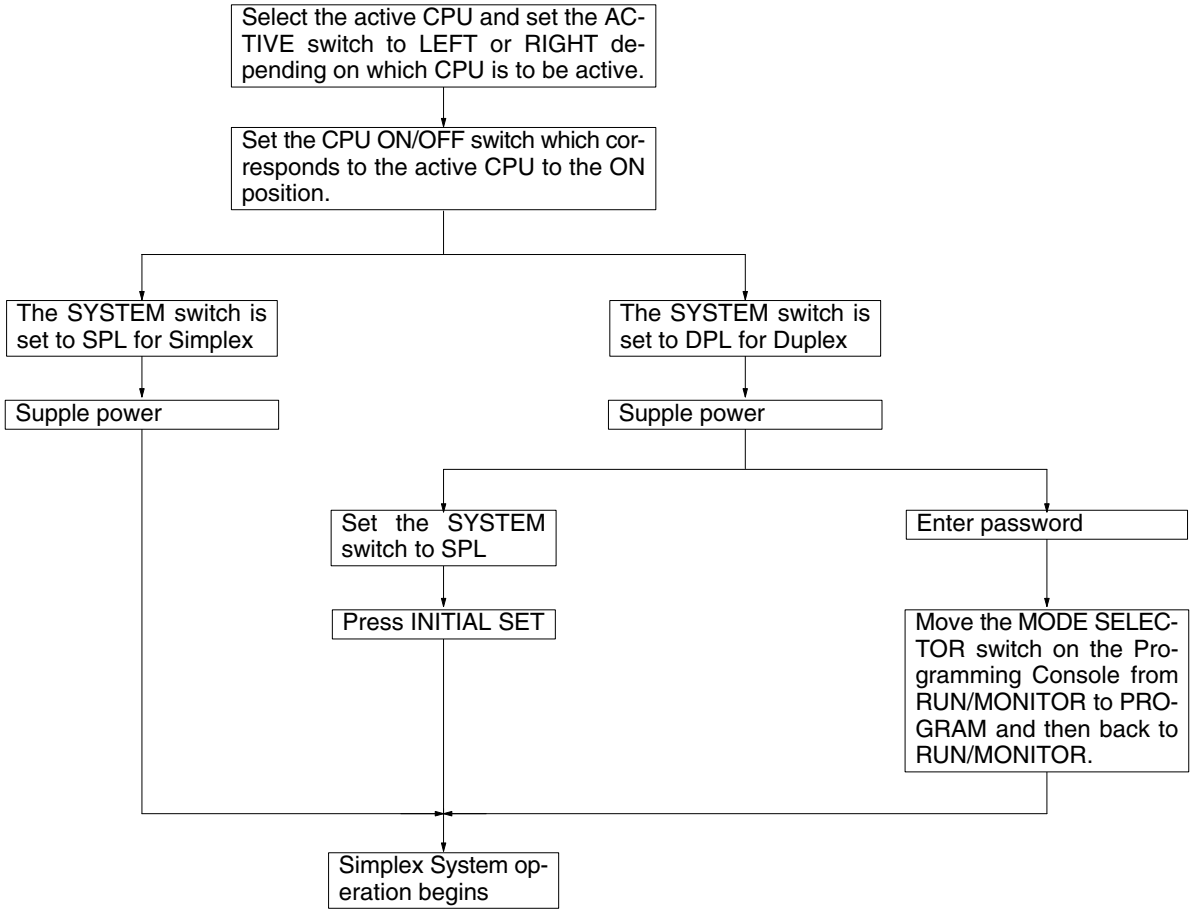

3-3 C2000H Simplex System

The C2000H Simplex System is a PC that operates with only one CPU. The operation of the Simplex System is quite similar to that of the C1000H, in that a maximum of seven Expansion I/O Racks can be utilized to access a maximum of 2,048 I/O points.

One difference can be seen in the CPU Rack. Only six I/O Units can be mounted to the CPU Rack of the C2000H Simplex System. Also, an I/O Remove Unit, a feature unique to the C2000H Systems, can be mounted to the CPU and Expansion I/O Racks to allow on-line exchange.

3-4 Memory Packs

The CPU has a removable Memory Pack that stores the user program. Two Memory Packs are available, in either RAM or ROM. You can write your own program into the RAM Pack or you can copy a program that has already been written to an EPROM chip and mount it in the ROM Pack. The EPROM Chip must be mounted to the PROM Writer in order for the program to be written to it. Then the EPROM Chip must be mounted to the ROM Pack.

Mounting the EPROM Chip to the ROM Pack

Depending on the memory required for your application, choose either two chips for 16K words or four chips for 32K words. Only one model of EPROM chip can be used in the C1000H and C2000H PCs. Refer to *Appendix B Specifications* for specifications of the EPROM chips.

Using the diagram and the table below as a reference, mount the EPROM chips to the correct IC sockets.

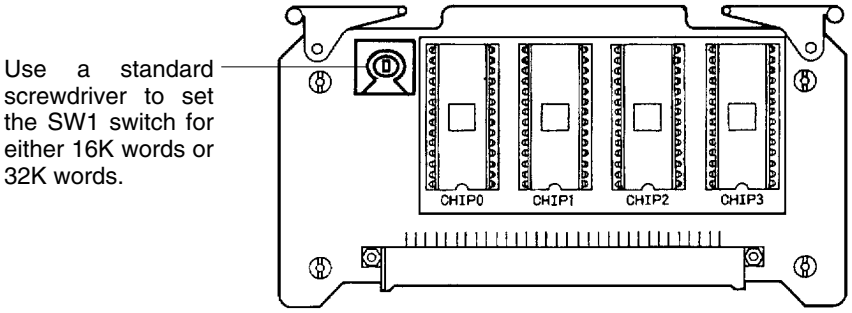

The table below summarizes the programming capacity.

	Switch Setting	IC Socket			
	SW1 No. Selection	CHIP 0	CHIP 1	CHIP 2	CHIP 3
		Up to 16K words		16K to 32K words	
		Upper 8 Bits	Lower 8 Bits	Upper 8 Bits	Lower 8 Bits
16K words	2	Two 27128		---	
32K words	4	Two 27128		Two 27128	
	5	Two 27256 (see note)		---	
	6	Two 27512		---	

Note EPROM 27256 has to be 150 ns.

How to Install the Memory Pack

Take the following steps to install the Memory Pack in the CPU.

1, 2, 3...

1. Turn the power to the PC OFF.

⚠ Caution Do not attempt to install the Memory Pack in the CPU while the power to the PC is ON. Doing so may cause data to be lost, or may damage the CPU or Memory Pack.

2. Using a standard screwdriver, remove the Memory Pack compartment cover located on the front panel of the CPU. Push in the latch on the cover and slide the cover upward.

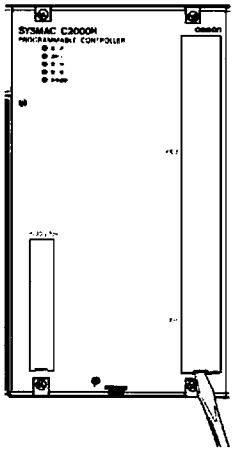

Use a standard screwdriver to remove the Memory Pack compartment cover.

3. When using the RAM Pack, make sure the write-protect switch is set before installing the Unit in the CPU. Refer to the following table for the status of the write-protect function.

	Write enabled	Write disabled
Write-protect switch	OFF	ON
Write-protect LED indicator	Unlit	Lit

4. Insert the Memory Pack (component side facing left) into the Memory compartment. When the Unit is almost completely inserted into the CPU, there may be a slight resistance as the Memory Pack connector mates with the connector inside the CPU. Continue pushing on the Memory Pack until it is inserted completely into the CPU.

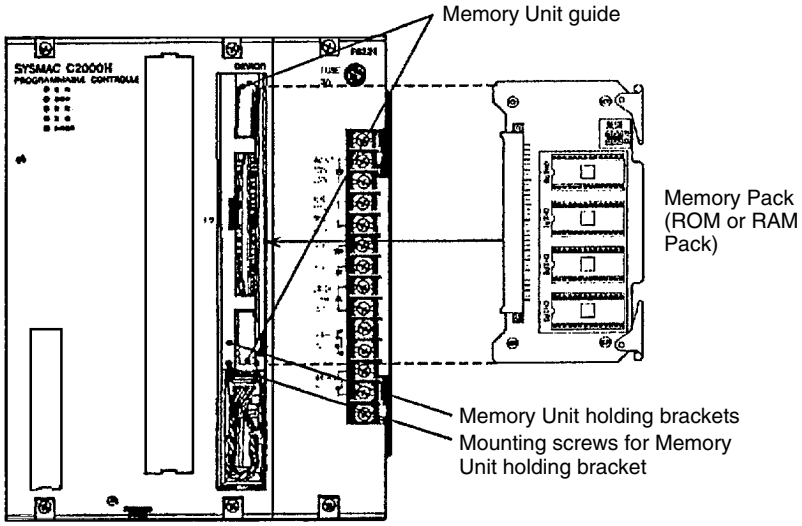

5. Reattach the memory compartment cover.

How to Remove the Memory Pack

Follow the steps below to remove the Memory Pack from the CPU.

1, 2, 3...

1. Turn the power to the PC OFF.
2. Using a standard screwdriver, remove the Memory Pack compartment cover located on the front panel of the CPU. Push in the latch on the cover and slide the cover upward.
3. When removing the RAM Pack from the CPU, be sure to connect the RAM Pack to a back-up battery *before* removing it from the Memory Compartment, or the data will be lost.

   Note Do not use the back-up battery located in the compartment above the Memory Unit. This battery is used to back-up the internal memory of the CPU. If this battery is disconnected, the contents of the internal memory will be lost.

4. Pull the white tabs of the Memory Pack up and out. The tabs push against the guide rail provided for the Memory Pack and force the Memory Pack out of the Memory Pack compartment.

   Note When moving the C1000H or C2000H PCs, secure the Memory Pack with holding brackets.

3-5 System Configurations

This section provides illustrations of assembled C1000H and C2000H Systems.

C1000H System

The following figure shows an assembled C1000H CPU Rack and one Expansion I/O Rack. When 7 Expansion I/O Racks are connected to a CPU Rack, a maximum of 1,024 I/O points are available. When Remote I/O Units are used in the system, the maximum number of I/O points available increases to 2,048.

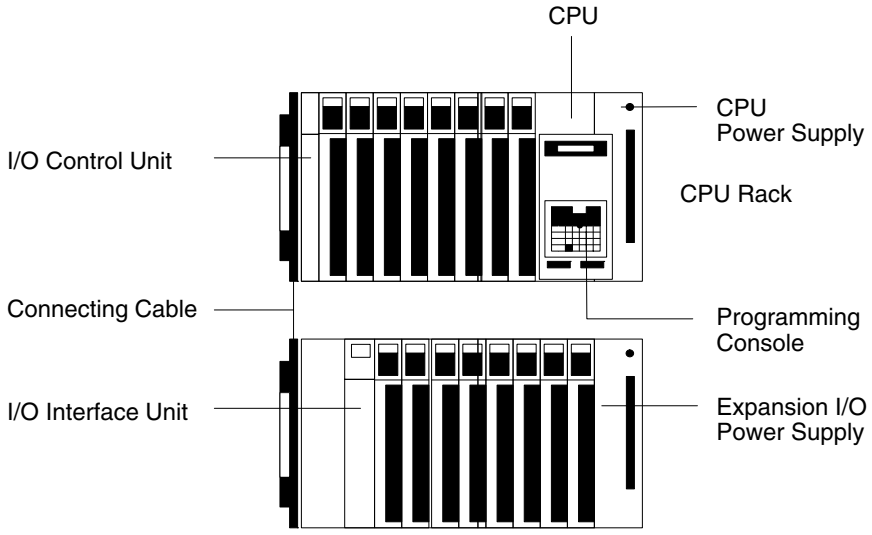

C2000H Simplex System

The C2000H Simplex System is similar to the C1000H except that the C2000H Simplex CPU Rack has a maximum of six slots instead of eight. When seven Expansion I/O Racks are connected to a CPU Rack, a maximum number of

2,048 points are available, regardless of whether Remote I/O Units are used in the system.

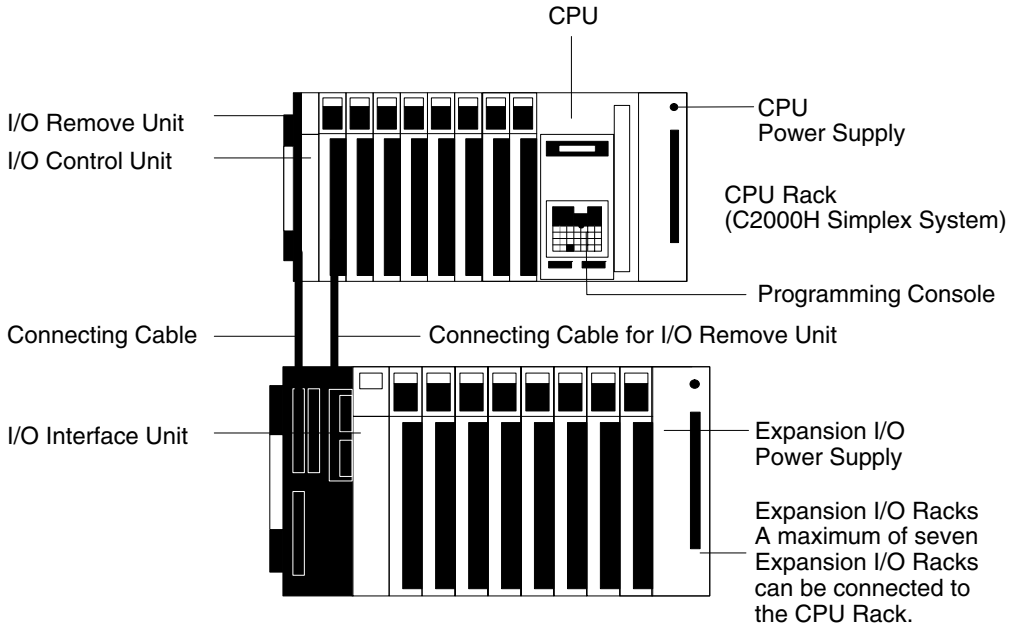

C2000H Duplex System

The CPU Rack for the C2000H Duplex System, unlike the C1000H and the C2000H Simplex Systems, has two CPUs and a Duplex Unit mounted to it. The C2000H Duplex System is configured differently from the Simplex System, because it has an additional I/O Rack connected to the CPU Rack to accommodate the I/O Units. Note that there are two connecting cables that connect the CPU Rack to the I/O Rack. A maximum of seven Expansion I/O Racks can be connected to the I/O Rack, making 1,024 the maximum number of points available when 16-point I/O Units are used. The number of I/O points is increased to 2,048 when the system is configured with 32-point I/O Units.

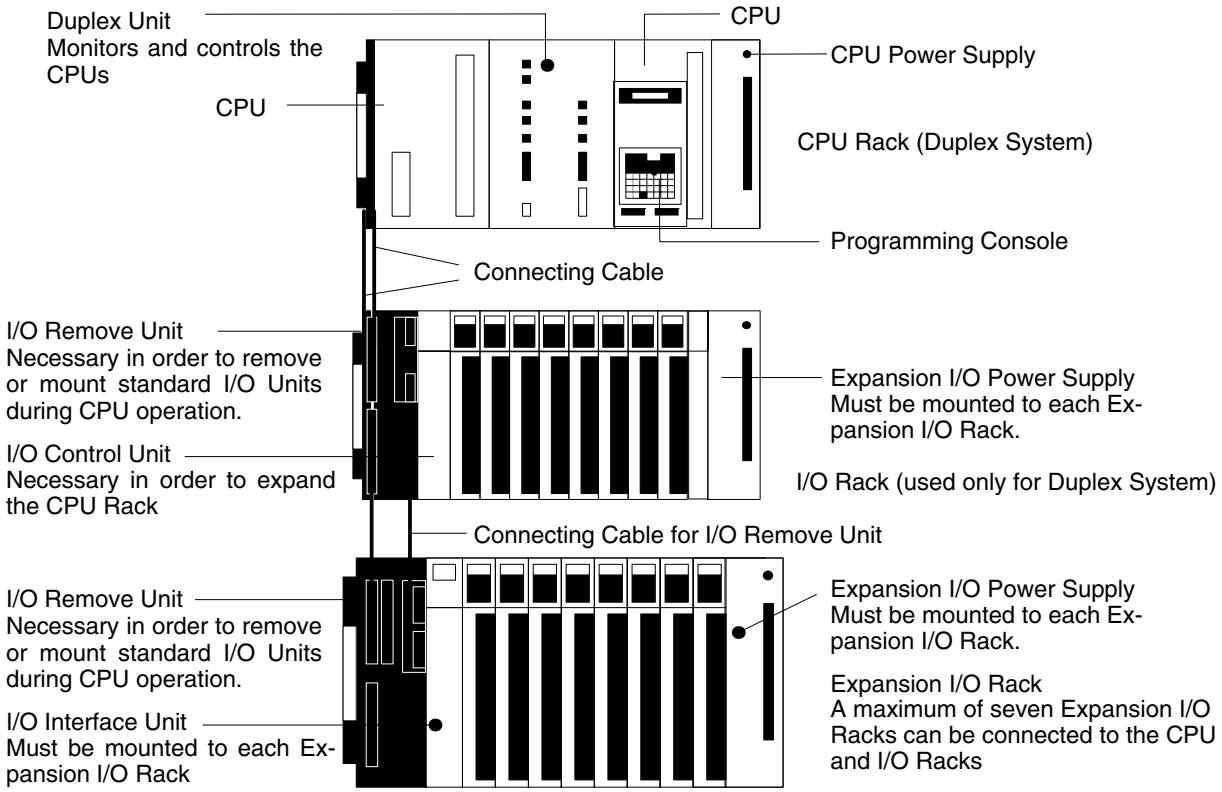

Where I/O Units Can be Mounted

The table below summarizes the Units that can be used in the systems described in this manual.

Special I/O Units	The number of Special I/O Units that can be used depends upon the number of points available and the number of points the Special I/O Unit requires. Be sure to check the current capacity for each I/O Unit and the CPU.
Host Link Units	When using 3G2A5-LK103(-P)/LK203 Host Link Units, a maximum of two Rack-mounting Host Link Units can be mounted to the CPU Rack or I/O Rack. An additional CPU-mounting Host Link Unit can be mounted to the CPU, making the total number of Host Link Units three. When using 3G2A5-LK101-(P)EV1/LK201-EV1 Host Link Units, only one Rack-mounting Host Link Unit can be mounted to the CPU Rack or I/O Rack. An additional CPU-mounting Host Link Unit can be mounted to the CPU, making the total number of Host Link Units two. These Host Link Units cannot be mounted on Expansion I/O Rack. If the SYSMAC Net Link Unit is mounted, either 3G2A5-LK103(-P) or 3G2A5-LK203 can be mounted as Rack-mounting Host Link Unit. Both models cannot be mounted at the same time.
I/O Units	Standard I/O Units are available with 16, 32, or 64 points. These Units can be mounted to or removed from the Rack if there is an I/O Remove Unit mounted to the Rack. Refer to *Section 2 Description of All Components* for details.
Memory Packs	RAM or ROM Packs are available. The ROM Pack requires a separately available EPROM chip. Install identical Memory Packs in both CPUs, if you are using a C2000H Duplex PC.
Remote I/O Master Unit	Up to eight Remote I/O Master Units can be mounted to both the I/O Rack and the Expansion I/O Racks. When the Remote I/O Unit is mounted to a Rack, a Rack number must be set so that the CPU can identify the Remote I/O Unit. Mount the Remote I/O Slave Unit to the leftmost position (the I/O Interface Unit position) on the Slave Rack. For details, refer to the *C1000H/C2000H Operation Manual*.

The table below summarizes specific Units that can and cannot be mounted in the CPU and Expansion Racks and the number that can be used in each PC. For detailed information about the Units listed below, refer to the Operation Manual for the individual Unit.

Unit	C1000H and C2000H Simplex			C2000H Duplex		
	CPU Rack		Expansion I/O Rack	I/O Rack		Expansion I/O Rack
16-, 32-, 64-point I/O	YES		YES	YES		YES
Interrupt Input	YES (4 max.)		NO	NO		NO
Special I/O	YES		YES	YES		YES
I/O Link	YES		YES	YES		YES
PC Link	YES (2 max.)		NO	YES (2 max.)		NO
Host Link (see note 1)	YES	Total: 2 max.	NO	YES	Total: 2 max.	NO
SYSMAC Link	YES		NO	NO		NO
SYSMAC Net Link	YES		NO	YES		NO
File memory	YES (1 max.)		NO	YES		NO
Remote I/O Master	YES		YES	YES		YES
Remote I/O Slave	NO		YES	NO		YES

Note

1. A CPU-mounting Host Link Unit can be mounted, in addition to the Rack-mounting Host Link Unit.
2. The Position Control Unit (3G2A5-NC103-E) and the PID Unit each require two I/O slots on the CPU Rack and the Expansion I/O Racks
3. The following Units can only be mounted to one of the three or five rightmost slots on the CPU Backplane, depending on which Backplane is used.
   PC Link
   Host Link
   SYSMAC Net Link
   File Memory
   SYSMAC Link

4. When two or more PCs are linked by the PC Link Unit, a maximum of 32 PC Link Units can be used (linking 31 PCs), in any number of subsystems.
5. When mounting two Host Link, SYSMAC Link, or SYSMAC Net Link Units to a C200H PC, use CPU01-EV1.

SECTION 4
System Connections

In the preceding sections we have covered all the parts of a PC and how they should be assembled. This section provides detailed information on PC connections.

4-1 Current Consumption 40
4-2 I/O Connections 43

4-1 Current Consumption

The Power Supplies are limited in the total current they can supply to I/O Units. The following table shows the maximum currents allowed.

Power Supplies

Unit	Model	Output Capacity	Current Available for I/O Units
CPU Power Supply (C1000H)	3G2A5-PS221-E	7 A 5 VDC	4 A
	C500-PS213-E	9 A 5 VDC	6 A
	3G2A5-PS223-E	12 A 5 VDC	9 A
	3G2A5-PS211-E	7 A 5 VDC	4 A
CPU Power Supply (C2000H Simplex)	3G2A5-PS221-E	7 A 5 VDC	3 A
	C500-PS213-E	9 A 5 VDC	5 A
	3G2A5-PS223-E	12 A 5 VDC	8 A
	3G2A5-PS211-E	7 A 5 VDC	3 A
I/O Power Supply	3G2A5-PS222-E	7 A 5 VDC	6.5 A
	3G2A5-PS212-E		

Note Do not exceed the maximum current ratings for each of the voltages supplied by any single Unit listed above. In addition, do not exceed the total maximum power output for any single Unit listed above. Refer to the tables on the following page for the current consumption of individual I/O Units.

Input Units

Unit	Model	Current Consumption (A)
DC Input	3G2A5-ID112	0.01
	C500-ID114	0.34
	3G2A5-ID213	0.02
	3G2A5-ID215	0.16
	3G2A5-ID218	0.26
	C500-ID218CN	0.2
	3G2A5-ID212	0.3
	3G2A5-ID219	0.34
Interrupt Input Unit (see note)	C2000-ID216	0.1
AC Input	3G2A5-IA121	0.18
	3G2A5-IA222	0.18
	C500-IA223	0.18
	3G2A5-IA122	0.18
TTL Input	C500-ID501CN	0.2
AC/DC Input	3G2A5-IM211	0.01
	3G2A5-IM212	0.2

Note The Interrupt Input Unit is used only in C1000H and C2000H Simplex Systems.

Output Units

Unit	Model	Current Consumption (A)
Contact Output	3G2A5-OC221	0.1
	3G2A5-OC223	0.1
	3G2A5-OC224-E	0.2
Transistor Output	3G2A5-OD411	0.16
	3G2A5-OD215	0.2
	3G2A5-OD412	0.23
	3G2A5-OD414	0.23
	3G2A5-OD212	0.23
	3G2A5-OD211	0.3
	3G2A5-OD213	0.46
	3G2A5-OD217	0.16
	C500-OD218	0.23
	C500-OD219	0.16
	3G2A5-OD415CN	0.23
Triac Output	3G2A5-OA121	0.3
	3G2A5-OA222	0.3
	3G2A5-OA223	0.45
	C500-OA225	0.2
	C500-OA226	0.45
TTL Output	C500-OD501CN	0.25
DC Input/Transistor Output Unit	C500-MD211CN	0.26
Dummy I/O	3G2A5-DUM01	0.035

Special I/O Units

Unit	Model	Current Consumption (A)
A/D Converter Input	3G2A5-AD001 to -AD005	0.3 each
	3G2A5-AD006	0.75 each
	3G2A5-AD007	
	C500-AD101	0.88
	C500-AD501	1.2
D/A Converter Output	3G2A5-DA001 to -DA005	0.55 each
	C500-DA101	1.3
	C500-DA103	1.3
High-speed Counter	3G2A5-CT001	0.3
	3G2A5-CT012	0.55
	C500-CT021	0.35
	C500-CT041	1.0
Magnetic Card Reader	3G2A5-MGC01-E	1.0
PID	3G2A5-PID01-E	1.4
Position Control	3G2A5-NC103-E	Total 1.4
	3G2A5-TU001-E	
	3G2A5-NC111-EV1	Total 1.0
	3G2A5-TU001-E	
	3G2A5-NC222-E	Total 1.3
	3G2A5-TU002-E	
ASCII	C500-ASC04	0.5
ID Sensor	C500-IDS01-V2/02-V1	0.4 each
	C500-IDS21/22	
Ladder Program I/O	3G2A5-LDP01-V2	0.8
File Memory	C1000H-FMR11	0.35 each
	C1000H-FMR21	
Cam Positioner	C500-CP131	0.35

Link Units and Remote I/O Units

Unit	Model	Current Consumption (A)
I/O Link	3G2A5-LK010-(P)E	0.6
PC Link	C500-LK009-V1	0.9
Host Link	C500-LK103 (-P)	1.0 each
	C500-LK203	
Remote I/O Master	3G2A5-RM001-(P)EV1	0.7
Remote I/O Slave	3G2A5-RT001-(P)EV1	0.5 each
	3G2A5-RT002-(P)EV1	
SYSMAC Net Link	C500-SNT31-V4	1.4
SYSMAC Link (see note)	C1000H-SLK11	0.8 each
	C1000H-SLK21-V1	
Wired Remote I/O Master	C500-RM201	0.3
Wired Remote I/O Slave	C500-RT201	0.5

Note The SYSMAC Link Unit is used only in C1000H and C2000H Simplex Systems.

4-2 I/O Connections

Connect the I/O Devices to the I/O Units using AWG (cross-sectional area: 0.3 mm^2) for 19-terminal terminal blocks and AWG 22 to lead wire (cross-sectional area: 0.3 to 0.75 mm^2) for 10-terminal terminal blocks. The terminals have screws with 3.5-mm diameter heads and self-raising pressure plates. Connect the lead wires to the terminals as shown. Tighten the screws to a torque of 0.8 N•m.

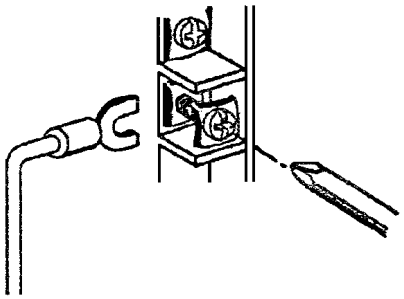

Use ring crimp terminals for wiring. Do not connect bare stranded wires directly to terminal blocks.

Terminal Block

The terminal block of an I/O Unit can be removed by loosening the mounting screws. You do not have to remove the lead wires from the terminal block in order to remove it from an I/O Unit.

Note Putting I/O Lines and high-tension lines or power lines in the same duct or conduit may cause the I/O Lines to be affected by noise. This may cause a malfunction in the I/O Unit or may cause damage to the I/O Unit or I/O devices.

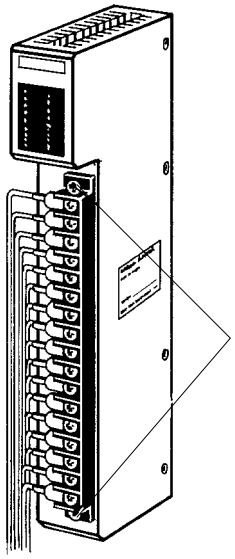

Terminal block mounting screws
Loosen the terminal block mounting screws to remove the terminal block from the I/O Unit. Make sure the mounting screws on the terminal block are tightened after wiring is complete, and the terminal block is remounted to the I/O Unit.

Note When a Triac Output Unit is used to drive a low-current load, the load may not turn completely OFF due to a leakage current. To compensate for the leakage current, connect a bleeder resistor in parallel with the load.

Wiring Examples

The following are examples of how to connect I/O devices to I/O Units. During wiring, work slowly and carefully. If an input device is connected to an Output Unit, damage may result. Check all I/O devices to make sure they meet the specifications (refer to *Appendix B Specifications*). Be sure to allow for leakage current and load inductance.

DC Input Units

Contact output

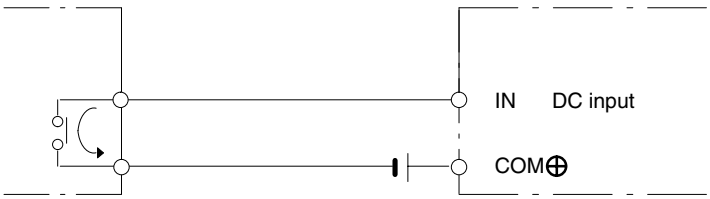

When using the following configurations, the sensor and Input Unit should receive their power from the same supply.

NPN current output

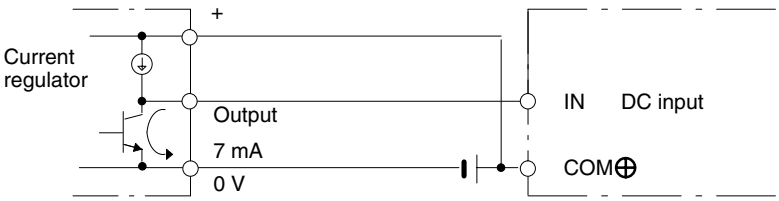

NPN open-collector output

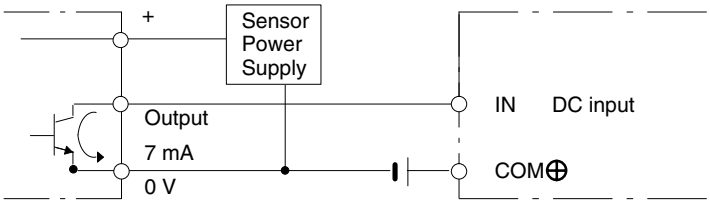

PNP current output

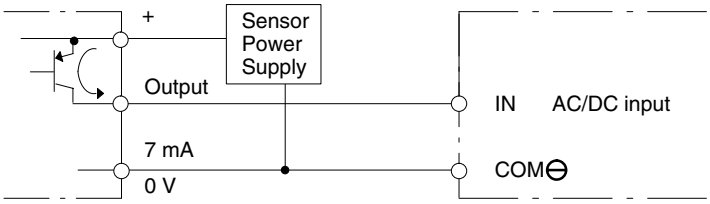

AC Input

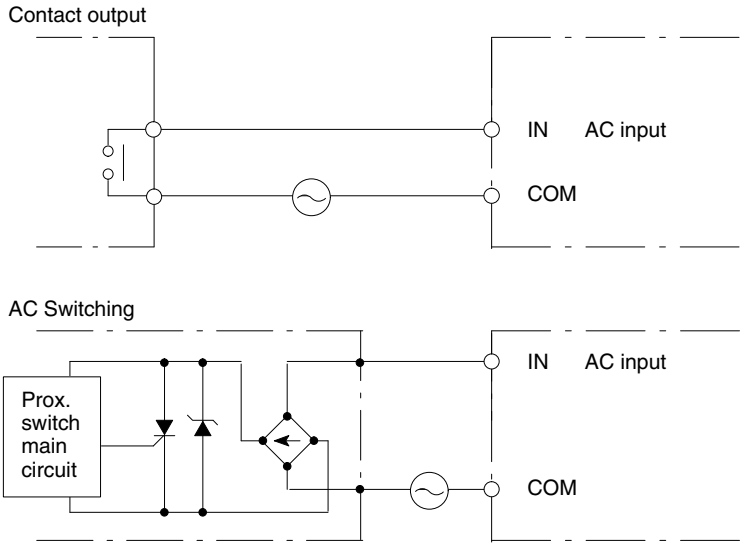

Note If a reed switch is used as the input contact of the AC Input Unit, the reed switch must have a permissible current capacity of 1 A minimum, otherwise contact weld may result due to inrush current.

Output Units

A fuse placed in the output circuit will protect the output element, circuit board, etc., in the event of a short circuit in the output circuit.

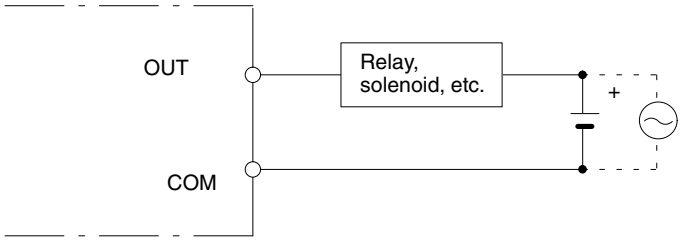

SECTION 5
Installation Environment

This section details the necessary environment and conditions for installation of the PC. For specific instructions on mounting Units and wiring for I/O and power, refer to *Section 3-5 System Configurations* and *4-2 I/O Connections*.

⚠ **Caution** Static electricity can cause damage to PC components. Your body can carry an electrostatic charge, especially when the humidity is low. Before touching the PC be sure to first touch a grounded metallic object, such as a water pipe, in order to discharge any static build-up.

5-1 Cooling 48
5-2 Mounting Requirements 48
5-3 Duct Work 50
5-4 Preventing Noise 51

5-1 Cooling

There are two points to consider in order to ensure that the PC does not overheat. The first is the clearance between the Racks, and the second is installation of a cooling fan.

Clearance Between Racks

The Racks need to have sufficient room between each other to allow for I/O wiring, and additional room to ensure that the I/O wiring does not hamper cooling. However, the Racks must be mounted so that the length of the connecting cable does not exceed **2 m**, and the total length of the Connecting Cables between all Racks does not exceed 12 m. For details about cable lengths, refer to *Appendix C Standard Models*. As a general rule, about 70 to 120 mm should be left between any two Racks (50 to 100 mm should be left between any two Racks in the Duplex System).

Cooling Fan

A cooling fan is not always necessary, but may be needed in some installations. Try to avoid mounting the PC in a warm area, or over a source of heat. A cooling fan is needed if the ambient temperature may become higher than that specified (refer to *Appendix B Specifications*). If the PC is mounted in an enclosure install a cooling fan, as shown in the following diagram, to maintain the ambient temperature within specifications.

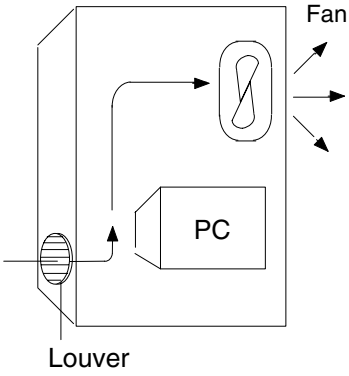

5-2 Mounting Requirements

The PC consists of from one to eight Racks, or from one to nine Racks if you are using the C2000H Duplex System. Each Rack must be mounted vertically, that is with the printing on the front panels oriented as it would normally read. The Racks should be mounted one above the other with the CPU Rack uppermost.

The PC may be directly mounted to any sturdy support meeting the environmental specifications (refer to *Appendix B Specifications*).

The duct work shown in the following diagram is not used for mounting the Racks. Although optional, the duct work can be used to house the wires from the I/O Units that run along the sides of the Racks, keeping the wires from becoming entangled with other machines. The figures illustrate the correct way to mount the Racks.

C1000H System

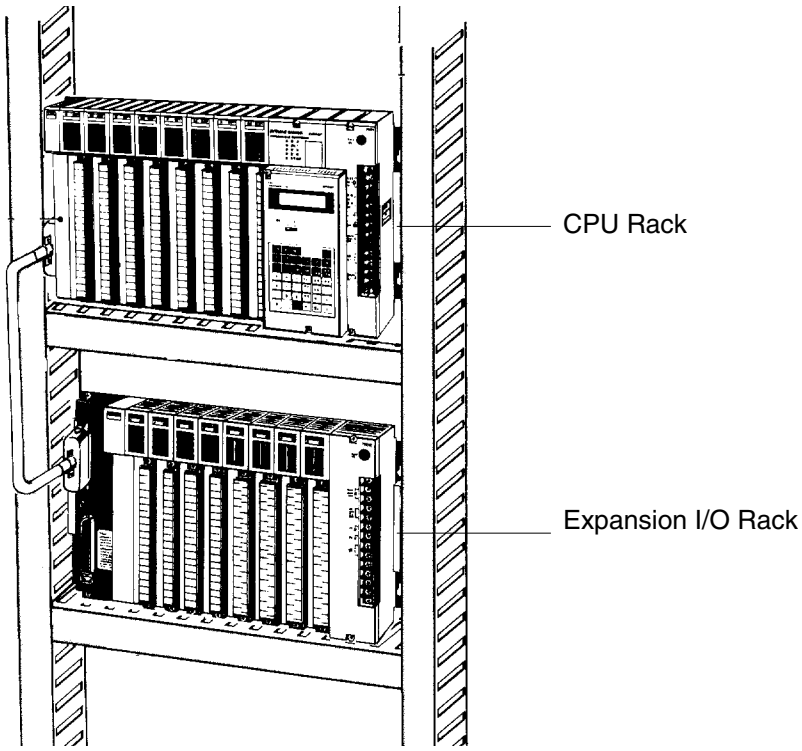

C2000H Duplex

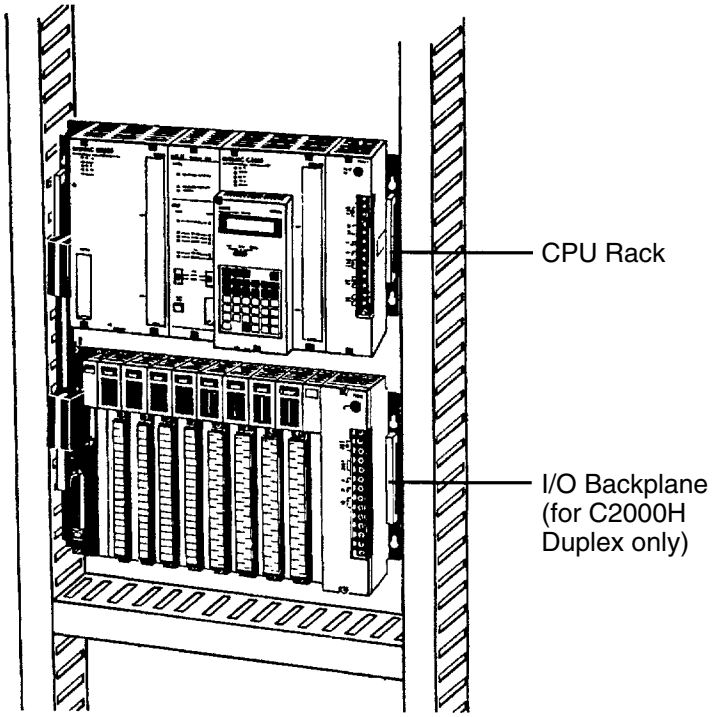

The following figure shows a side view of a mounted CPU and two Expansion I/O Racks. There should be a distance of 70 to 120 mm between the mounted Units.

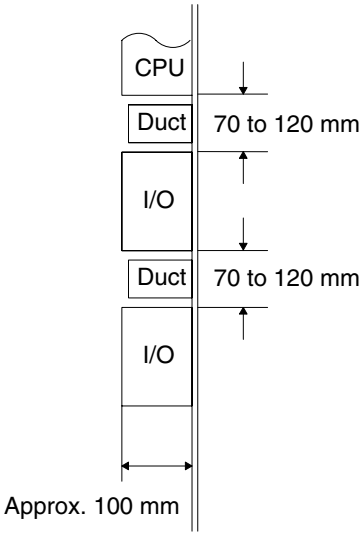

5-3 Duct Work

If power cables carrying more than 10 A 400 V, or 20 A 220 V must be run alongside the I/O wiring (that is, parallel to it), leave at least 300 mm between the power cables and the I/O wiring as shown below.

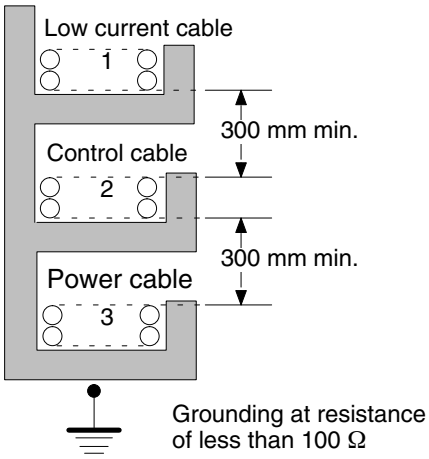

1 = I/O wiring
2 = General control wiring
3 = Power cables

If the I/O wiring and power cables must be placed in the same duct (for example, where they are connected to the equipment), shield them from each other using grounded metal plates.

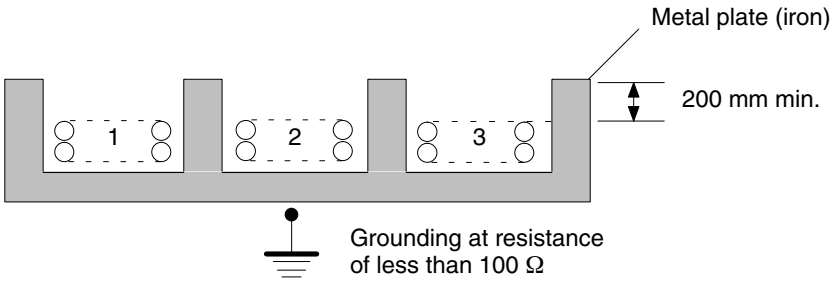

1 = I/O wiring
2 = General control wiring
3 = Power cables

5-4 Preventing Noise

In order to prevent noise from interfering with the operation of the PC, use AWG 14 twisted-pair cables (cross-sectional area: 2 mm^2 min.). Avoid mounting the PC close to high-power equipment, and make sure the point of installation is at least 200 mm away from power cables as shown below.

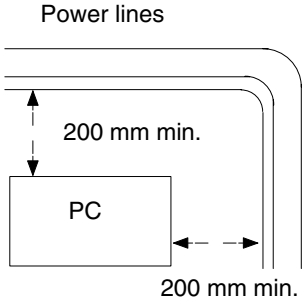

Whenever possible, use wiring conduit to hold the I/O wiring. Standard wiring conduit should be used, and it should be long enough to completely contain the I/O wiring and keep it separated from other cables.

SECTION 6
Power Considerations

Use a commercially available 100 to 120 VAC, 200 to 240 VAC, or 24 VDC power source, according to the model of PC you are using (refer to *Appendix B Specifications*). Expansion I/O Racks, if used, must also be connected to the power source. If possible, use independent power sources for the PC, input devices, and output devices. All Racks of the PC may be connected to one power source.

Grounding

The Line Ground (LG) terminal is a noise-filtered neutral terminal that does not normally require grounding. If electrical noise is a problem, however, this terminal should be connected to the Ground (GR) terminal.

To avoid electrical shock, attach a grounded (earth ground) AWG 14 wire (cross-sectional area: 2 mm^2 min.) to the GR terminal. The resistance to ground must be less than 100 Ω. Do not use a wire longer than 20 m. Care must be taken, because ground resistance is affected by environmental conditions such as soil composition, water content, time of year, and the length of time since the wire was laid underground.

PC operation may be adversely affected if the ground wire is shared with other equipment, or if the ground wire is attached to the metal structure of a building. When using an Expansion I/O Rack, the Rack must also be grounded to the GR terminal. The same ground can be used for all connections.

Power Failure

A sequential circuit is built into the PC to handle power interruptions. This circuit prevents malfunctions due to momentary power loss or voltage drops. A timing diagram for the operation of this circuit is shown below.

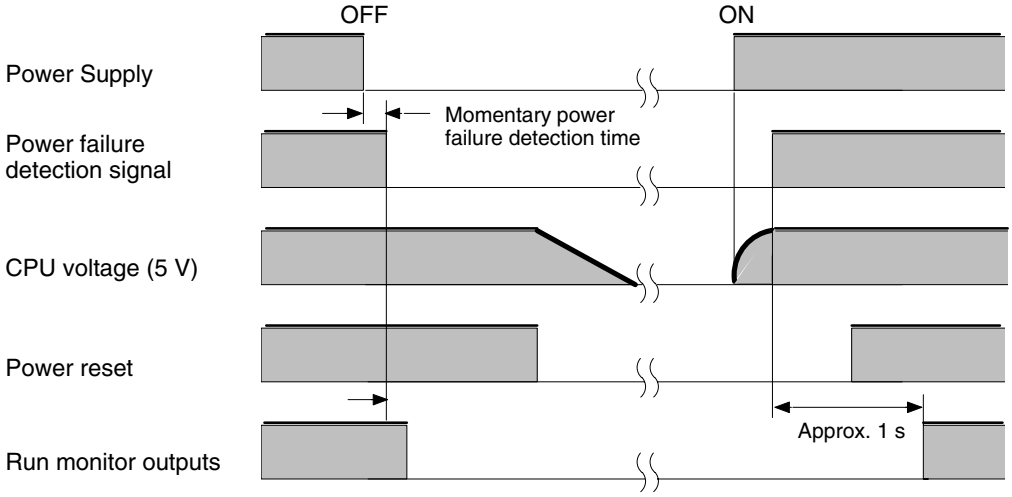

The PC ignores all momentary power failures if the interruption lasts no longer than 10 ms. If the interruption lasts between 10 and 25 ms, the interruption may or may not be detected. If the supply voltage drops below 85% of the rated voltage for longer that 25 ms (less for the DC Power Supply), the PC will stop operating and the external outputs will be automatically turned OFF. Operation is resumed automatically when the voltage is restored to more than 85% of the rated value.

Wiring

The following diagrams show the proper way to connect the power source to the PC. The terminals marked “NC” are not connected internally.

AC Connections

3G2A5-PS221-E/223-E

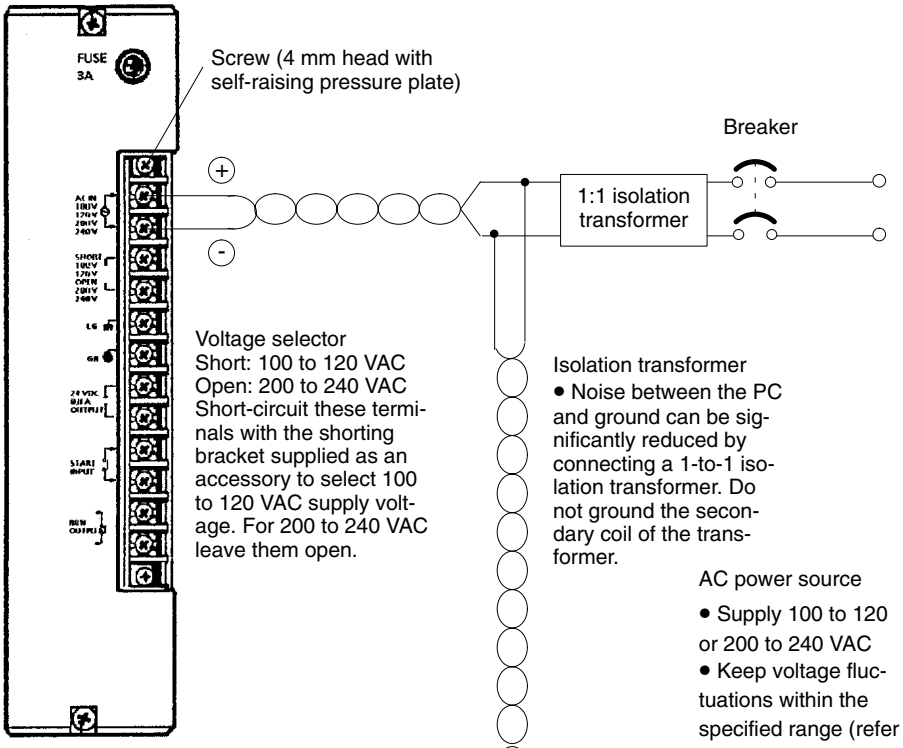

3G2A5-PS222-E

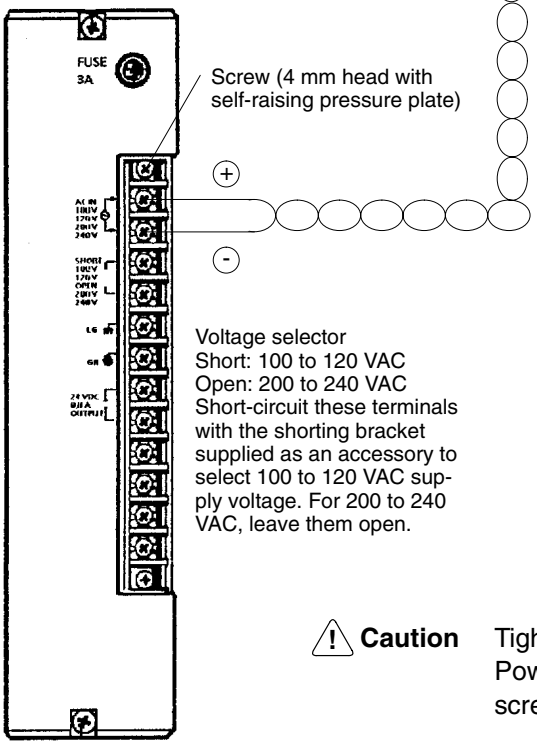

Power line
• Use AWG 14 twisted-pair cable (cross-sectional area: 2 mm^2 min.)

Be sure to use a wire of at least 1.25 mm^2 in thickness. Use ring crimp terminals for wiring. Do not connect bare stranded wires directly to terminal blocks. Use M4 screws for tightening crimp terminals.

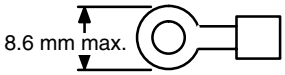

⚠ **Caution** Tighten the terminal block screws of the AC Power Supply to a torque of 1.2 N•m. Loose screws may result in burning or malfunction.

DC Connections

C500-PS213-E
3G2A5-PS211-E (C1000H and C2000H Simplex Systems)

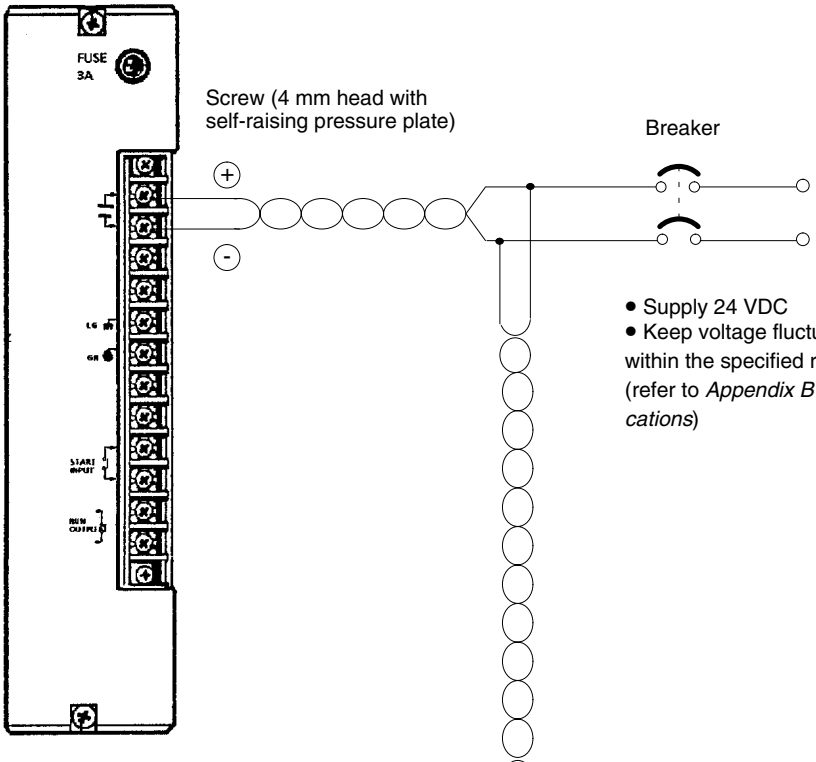

3G2A5-PS212-E

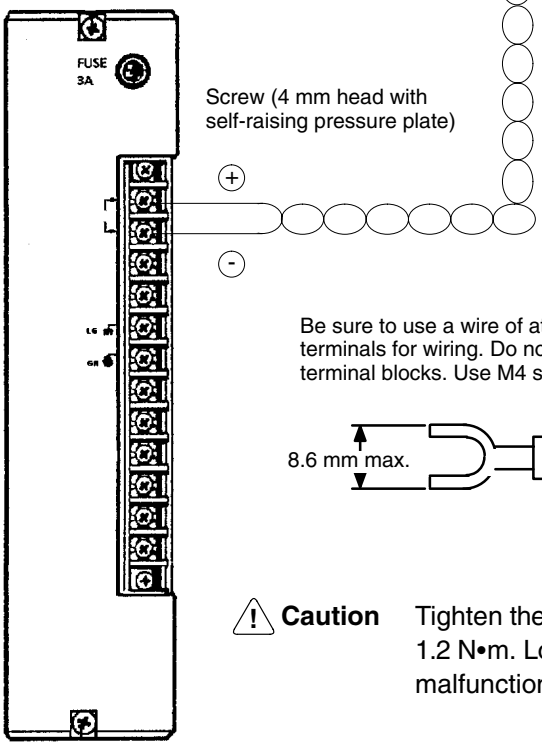

Power line
• Use AWG 14 twisted-pair cable (cross-sectional area: 2 mm^2 min.)

Be sure to use a wire of at least 1.25 mm^2 in thickness. Use crimp terminals for wiring. Do not connect bare stranded wires directly to terminal blocks. Use M4 screws for tightening crimp terminals.

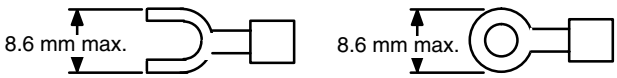

⚠ **Caution** Tighten the terminal block screws to a torque of 1.2 N•m. Loose screws may result in burning or malfunction.

Grounding Connections

3G2A5-PS223-E/221-E/211-E
C500-PS213-E

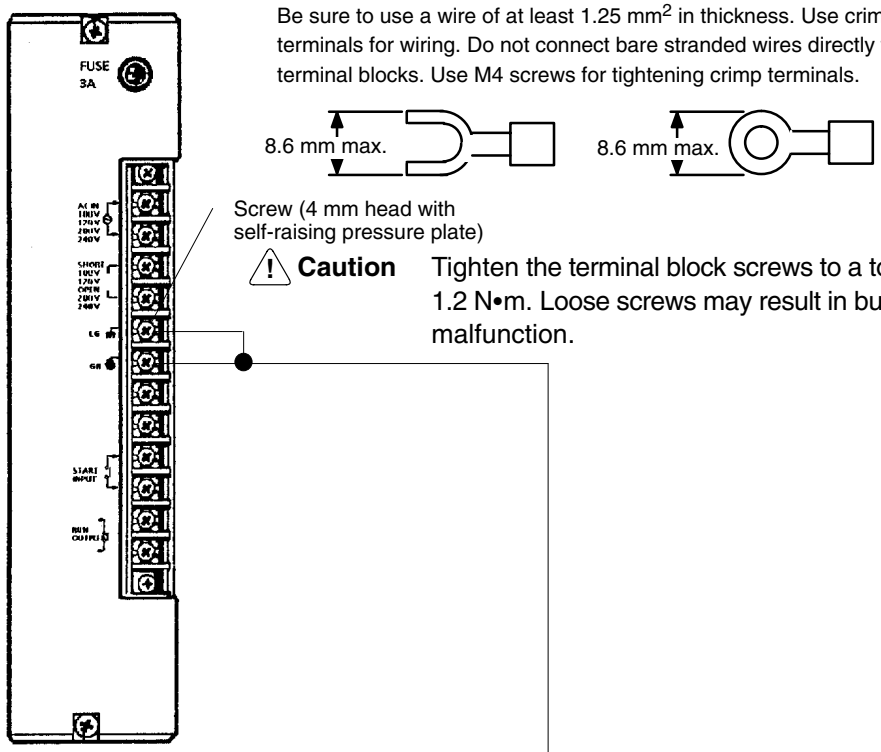

⚠ **Caution** Tighten the terminal block screws to a torque of 1.2 N•m. Loose screws may result in burning or malfunction.

For grounding use 2mm^2 cable. Be sure to keep the length of the cable less than 20 meters.

3G2A5-PS222-E/212-E

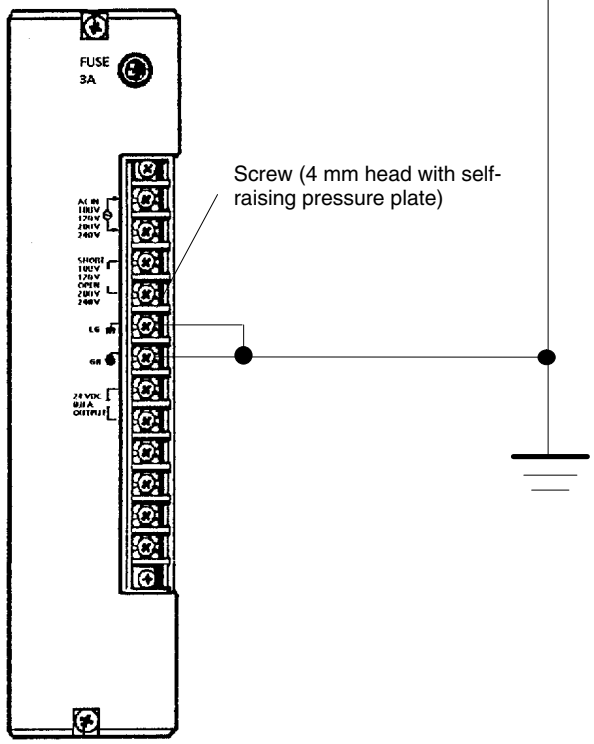

⚠ **Caution** Ground the Power Supplies separately from peripheral devices.

SECTION 7
Safety Considerations

There are certain safety requirements to be considered when installing the PC. Some of these, such as the emergency stop circuit (refer to *Power Supply*), are part of the initial wiring. The considerations described below should be kept in mind when operating the PC and when connecting I/O devices to the PC.

Interlock Circuits

When the PC controls an operation such as the clockwise and counterclockwise operation of a motor, provide an external interlock such as the one shown below to prevent both the forward and reverse outputs from turning ON at the same time.

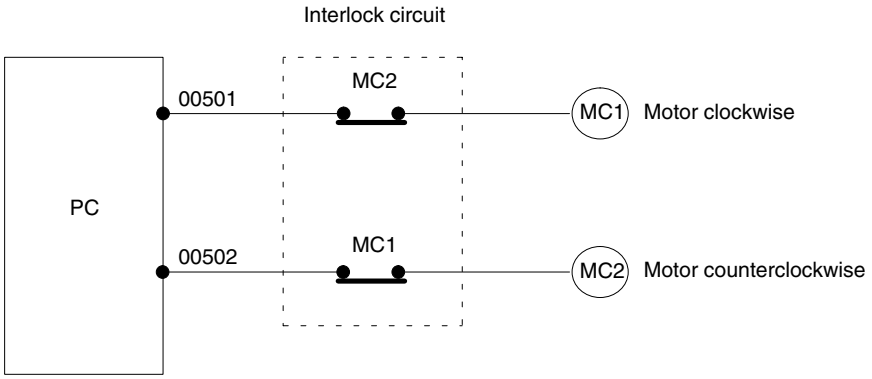

This circuit prevents outputs MC1 and MC2 from both being ON at the same time. Even if the PC is programmed improperly or malfunctions, the motor is protected.

Power Supply Output

The 24 VDC output of the CPU and Expansion I/O Power Supply may be used to power other devices. The output current of these supplies is limited to 0.3 A. A separate Power Supply must be provided if the devices being powered require a higher current.

Input Leakage Current

When two-wire sensors, such as photoelectric sensors, proximity sensors or limit switches with LEDs are connected to the PC as input devices, the input bit may be turned ON erroneously by leakage current. In order to prevent this, connect a bleeder resistor across the input as shown below.

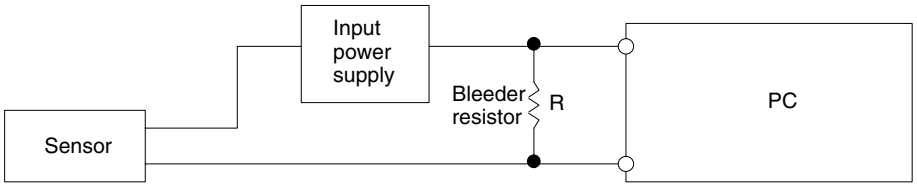

If the leakage current is less than 1.3 mA, there should be no problem. If the leakage current is greater than 1.3 mA, determine the value and rating for the bleeder resistor using the following formulas.

I = leakage current in mA

$$R = \frac{7.2}{2.4 \times I - 3} \quad k\Omega \text{ max.}$$

$$W = \frac{2.3}{R} \quad W \text{ min.}$$

Output Leakage Current

If there is a possibility of leakage current causing a transistor or triac to malfunction, connect a bleeder resistor across the output as shown below.

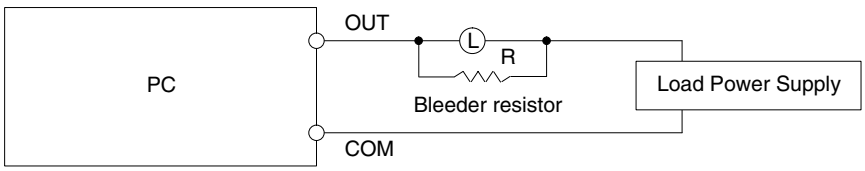

Determine the value and rating for the bleeder resistor using the following formula.

$$R < \frac{E_{ON}}{I}$$

Where

E_{on} = ON voltage of the load

I = leakage current in mA

R = bleeder resistance

Output Surge Current

When connecting a transistor or triac Output Unit to an output device having a high surge current (such as an incandescent lamp), care must be taken to avoid damage to the Output Unit. The transistor and triac Output Units are capable of withstanding a surge current of ten times the rated current. If the surge current for a particular device exceeds this amount, use the circuit shown below to protect the Output Unit.

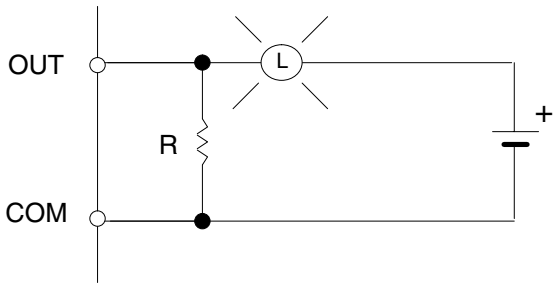

Another way of protecting the Output Unit lets the load draw a small current (about one third the rated current) while the output is OFF, significantly reducing the surge current. This circuit (shown below) not only reduces the surge current, but also reduces the voltage across the load at the same time.

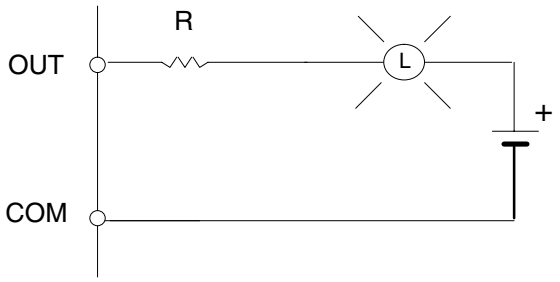

Transistor Output Residual Voltage

When connecting TTL circuits to transistor Output Units, connect a pull-up resistor and a CMOS IC between the two. This is because of the residual voltage left on the transistor output after the output turns OFF.

Inductive Load Surge Suppressor

When an inductive load is connected to an I/O Unit, connect a surge suppressor or diode in parallel with the load as shown in the following diagram. This is so that the back electromagnetic field generated by the load will be absorbed.

Resistor: 50 W
Capacitor: 0.47 F
Voltage: 200 V
Diode: Must withstand voltages of more than three times the load voltage and an average current of 1 A

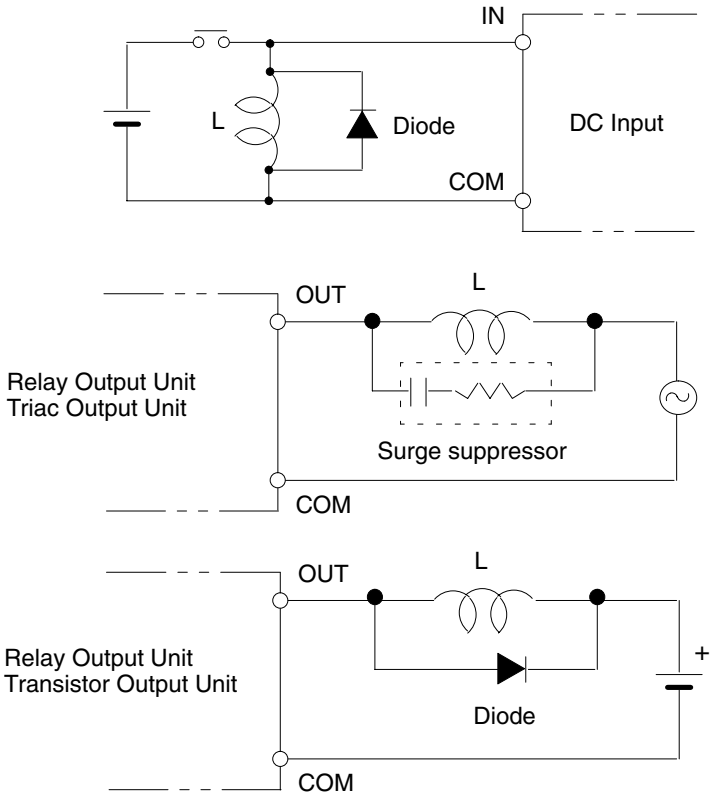

Electrical Noise

Take appropriate measures when any electrical device likely to produce noise is connected to the PC as a load. Devices generating noise of more than 1,200 V (such as electromagnetic relays and valves) require noise suppression. For noise sources running on AC power, connect a diode in parallel with the coil of each device.

When mounting a CPU Rack and an Expansion I/O Rack together on a mounting plate, provide a solid ground to the mounting plate. The mounting plate must be plated with a highly conductive surface in order to ensure noise immunity.

Appendix A
Inspection and Maintenance

Certain consumable items in a PC (such as fuses, relays, or batteries) need occasional replacement. This Appendix explains how to replace each of these items. Refer to *Appendix B Specifications* for the specifications of individual consumable items. Always keep spare items on hand so that they can be used as immediate replacements.

CPU and Power Supply Fuses

To replace a fuse in the CPU or Power Supply, follow the steps below.

1. Turn OFF the power to the PC.
2. Remove the fuse holder by turning it approximately 50° counterclockwise with a standard screwdriver.
3. Remove the fuse from the holder.

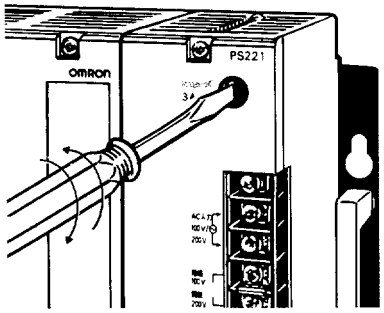

4. Insert a new fuse.
5. Reattach the fuse holder by turning it approximately 50° clockwise with a standard screwdriver.

Output Unit Fuses

To replace a fuse in an Output Unit, follow the steps below.

1. Turn OFF the power to the PC.
2. Detach the terminal block from the Output Unit, by removing the screws located at the top and bottom of the terminal block.

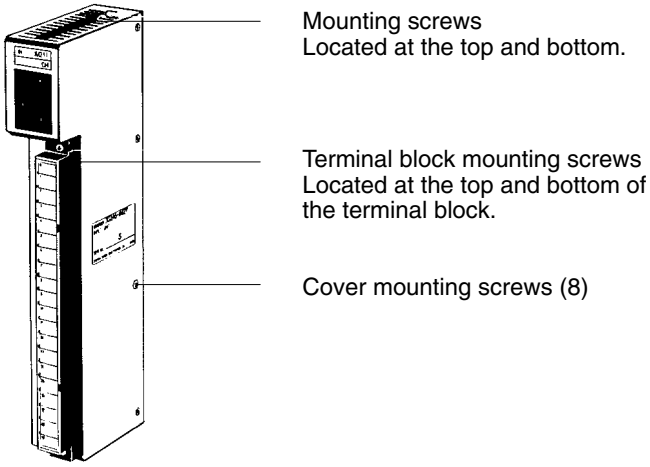

3. Remove the screws that mount the Output Unit to the Backplane. Pulling the Unit toward you, remove the Output Unit from the Backplane.
4. There are eight screws on each side of the Output Unit. Remove these screws to detach the case from the cover.

5. Pull out the printed circuit board.
6. Insert a new fuse.
7. Reassemble in reverse order.

Output Unit Relays

To replace a Relay in an Output Unit, follow the steps below.

1. Turn OFF the power to the PC.
2. Detach the terminal block from the Output Unit, by removing the screws located at the top and bottom of the terminal block.

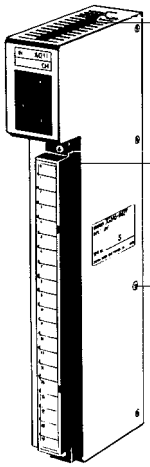

3. Remove the screws that mount the Output Unit to the Backplane. Pulling the Unit toward you remove the Output Unit from the Backplane.
4. There are eight screws on each side of the Output Unit. Remove these screws to detach the case from the cover.
5. Pull out the printed circuit board. Place the Relays on the circuit board.
6. Use the Relay Puller to pull out the Relay. Insert a new Relay.
7. Reassemble in reverse order.

Batteries

When the battery is nearly discharged, the ALARM indicator blinks and the message "BATT LOW" appears on the Programming Console. When this occurs, replace the battery within one week to avoid loss of data. The battery comes with its own connector as a set. To replace the Battery Set follow the steps below. The entire replacement must be completed within five minutes to ensure that the data will not be lost.

⚠ **Caution** Do not attempt to short circuit, charge, disassemble, or heat the battery. The battery fluid is flammable and explosive and if mishandled, may cause a fire or explosion. Do not incinerate the battery after use.

1. Turn OFF the power to the PC. (If the power was not already ON, turn the power ON for at least one minute before turning the power OFF.)
2. Remove the cover from the battery compartment.
3. Remove the old Battery Set.

4. Install the new Battery Set as shown below.

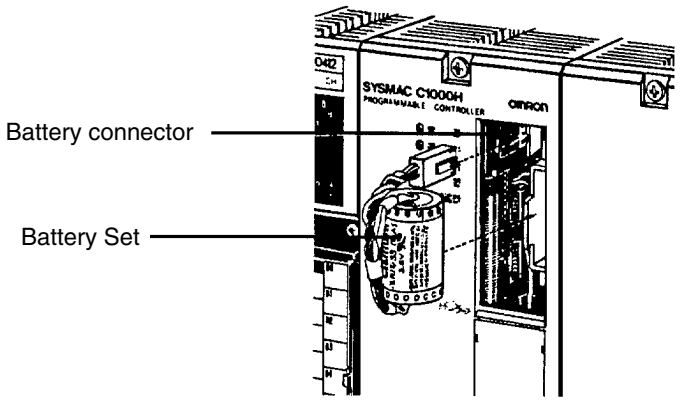

5. Replace the cover of the battery compartment.
6. When a Programming Console is mounted to the CPU after the battery has been replaced, "BATT LOW" will be displayed. This message can be cleared by pressing CLR, FUN, MONTR, or just turning the power to the PC OFF and the ON again to clear the error message on the Programming Console.

Note The service life of the battery is four years at 25°C.

Appendix B
Specifications

Power Supply Model		3G2A5-PS221-E/PS222-E/PS223-E	3G2A5-PS211-E/PS212-E, C500-PS213-E
Supply Voltage		100 to 120/200 to 240 VAC (selectable) 50/60 Hz	24 VDC
Operating Voltage Range		85 to 132/170 to 264 VAC	20.4 to 28.8 VDC
Power Consumption		150 VA max.	55 W max.
Output Capacity		PS221-E: 7 A 5 VDC PS223-E: 12 A 5 VDC PS222-E: 7 A 5 VDC	PS211-E: 7 A 5 VDC PS213-E: 9 A 5 VDC PS212-E: 7 A 5 VDC
24 VDC Output (see note 1)		0.8 A, 24 VDC ±10%	Not provided
Insulation Resistance		5 MΩ min. (at 500 VDC) between AC terminals	
Dielectric Strength (see note 2)		1,500 VAC 50/60 Hz for 1 minute (between AC and GR terminals) leakage current 10 m A max.	500 VAC 50/60 Hz for 1 minute (between DC and GR terminals) leakage current 1 mA max.
Noise Immunity		1,000 Vp-p, pulse width: 1 μs, rise time: 1 ns	
Vibration Resistance		Mechanical durability: 10 to 25 Hz, 2 mm double amplitude, in X, Y, and Z directions, for 2 hours each Electrical durability: 16.7 Hz, 1 mm double amplitude, in X, Y, and Z directions, for 10 minutes each	
Shock resistance		98 m/s^2 each in X, Y, and Z direction, 3 times	
Ambient Temperature		Operating: 0°C to 55°C Storage: –20°C to 65°C	
Ambient humidity		35% to 85% (without condensation)	
Atmosphere		Must be free from corrosive gasses	
Grounding		Less than 100 Ω	
Degree of Protection		Mounted in a panel	
Weight	C1000H	8 kg max.	
	C2000H Simplex	9 kg max.	
	C2000H Duplex	10 kg max.	

Note 1. This output is not provided on PS223-E.

2. When performing the dielectric strength test or the insulation resistance test be sure to disconnect the LG terminals from the GR (ground) terminals to protect the internal parts from damage.

CPU Specifications

Programming Method		Ladder diagram
Instruction Length		1 address/instruction, (1 to 4 words/instruction)
Number of Instructions		174 (12 basic instructions + 162 special instructions)
Execution Time	C1000H	0.4 to 2.4 μs (basic instructions)/8 to 68 μs (special instructions)
	C2000H	0.4 to 2.4 μs (basic instructions)/5 to 45 μs (special instructions)
Memory Capacity		32K words
I/O bits	C1000H	1,024 (00000 through 06315) (see note)
	C2000H	2,048 (00000 through 12715)
IR bits	C1000H	2,768 (06400 through 23615)
	C2000H	1,744 (12800 through 23615)
SR bits	C1000H	304 (23700 through 25507)
	C2000H	296 (23700 through 25507)
TR bits		8 (0 through 7)
HR bits		1,600 (0000 through 9915)
AR bits		448 (0000 through 2715)
LR bits		1,024 (0000 through 6315) PC Link: max. configuration 32 PCs x 32 points
Timers/Counters		512 (TIM/CNT 000 through 511) TIMs: 0 through 999.9 s TIMHs: 0 through 99.99 s CNT: 0 through 9999 counts
DM words	C1000H	4,096 (0000 through 4095)
	C2000H	6,656 (0000 through 6655)
Control Input Signal		START INPUT (in RUN mode, PC operates when contacts are closed and stops when contacts are opened) Input Voltage: 24 mA 24 VDC
Control Output Signal		RUN INPUT (Contacts are closed while PC is in RUN mode) Max. switching capacity: 2 A 250 VAC (resistive load) 0.5 A 250 VAC (inductive load, cos of phase angle= 0.4) 2 A 24 VDC
Memory Protection		Status of HR bits, preset value of counters (CNT), and contents of data memory (DM) are retained during power failure. Length of memory protection depends on the Memory Pack model being used (refer to *3-4 Memory Packs*).
Battery Life		4 years at 25°C, battery life is shortened at temperatures higher than 25°C. Replace battery with new one within 1 week when ALARM indicator blinks.
Self-diagnostic Functions		CPU failure (watchdog timer) Battery failure Cycle time error Memory failure I/O bus failure, etc.
Program Check		Program check (executed on start of RUN operation): END missing JMP-JME error Coil duplication Circuit error DIFU/DIFD over error IL/ILC error (Program can be checked by Programming Console or GPC.)

Note The number of points is increased to 2,048 when Remote I/O Units are used.

DC Input Units

	3G2A5-ID112	3G2A5-ID213
Input Voltage	5 to 12 VAC $^{+10\%}/_{-15\%}$	12 to 24 VAC $^{+10\%}/_{-15\%}$
Input Impedance	560 Ω	2.2 kΩ
Input Current	16 mA typical (at 12 VDC)	10 mA typical (at 24 VDC)
ON Voltage	4.0 VDC min.	10.2 VDC min.
OFF Voltage	1.5 VDC max.	3.0 VDC max.
ON Response Time	1.5 ms max.	1.5 ms max.
OFF Response Time	1.5 ms max.	1.5 ms max.
No. of Points	16 (8 points/common, 2 circuits)	16 (8 points/common, 2 circuits)
Internal Current Consumption	10 mA 5 VDC max.	20 mA 5 VDC max.
Weight	450 grams max.	450 grams max.
Circuit Configuration	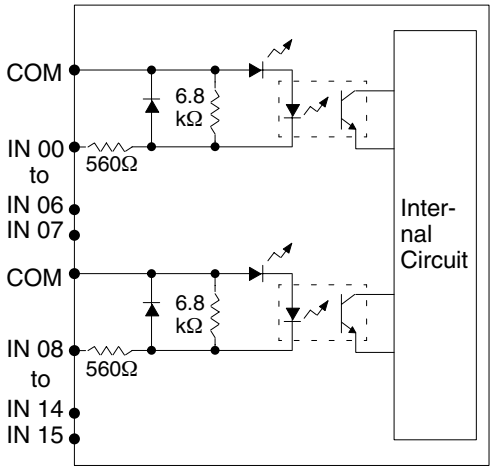 Two-wire sensors cannot be connected.	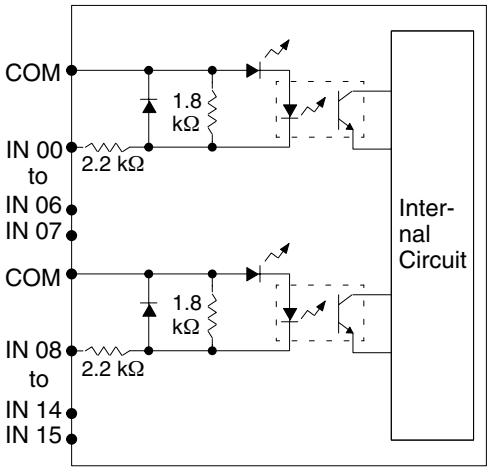
Terminal Connections	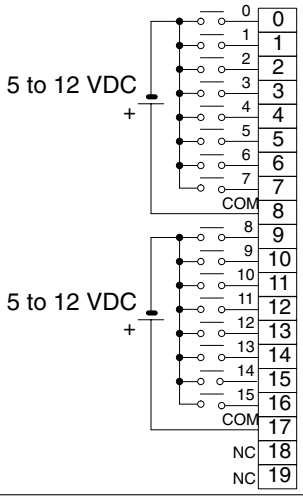	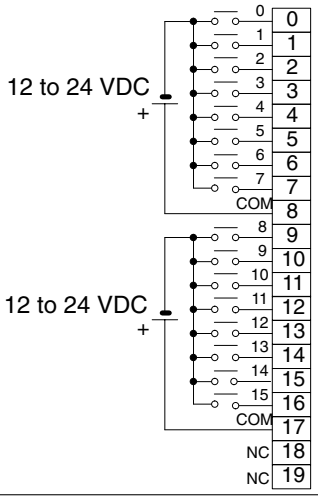
Dimensions	A-shape	A-shape

DC Input Units Continued

3G2A5-ID212 (Input)		3G2A5-ID212 (Output)	
Input Voltage	24 VDC $^{+10\%}/_{-15\%}$	Max. Switching Capacity	0.1 A 24 VDC $^{+10\%}/_{-15\%}$
Input Impedance	2.2 kΩ	Leakage Current	0.1 mA max.
Input Current	10 mA typical (at 24 VDC)	Residual Voltage	1.5 V max.
ON Voltage	10.2 VDC min.	ON Response Time	0.2 ms max.
OFF Voltage	3.0 VDC max.	OFF Response Time	0.3 ms max.
ON Response Time	1.5 ms max.	Power for External Supply	24 VDC ±10 %
OFF Response Time	1.5 ms max.		

Circuit Configuration

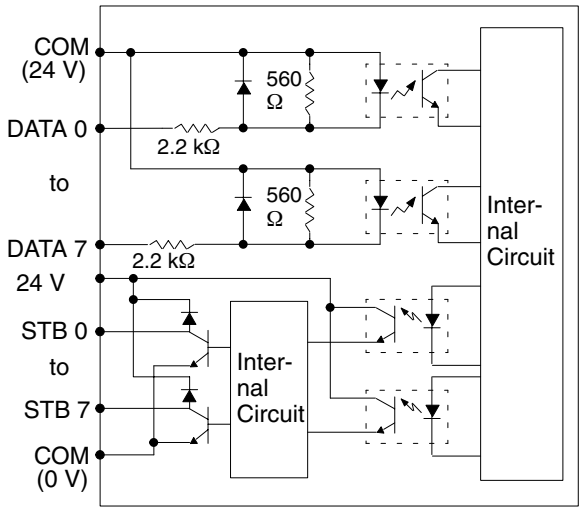

Terminal Connections

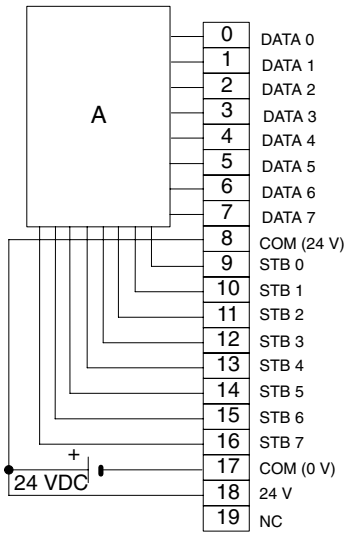

Refer to page 71 for connection.

No. of Points	64
Internal Current Consumption	300 mA 5 VDC max.
Weight	450 grams max.
Dimensions	A-shape

DC Input Unit 3G2A5-ID212

In the case where a large number of bits must be controlled, an ID212 DC Input Unit can simplify wiring by controlling up to 64 bits through only 16 points. Using digital switches or a specially wired keyboard, different combinations of points can access specific bits and words. Two examples of connections using digital switches or a keyboard are given.

Connection Example 1 (Keyboard)

The table below shows how the ID212 DC Input Unit can be wired using a specially wired keyboard. For example, if A on the keyboard is pressed, the combination of DATA0 and STB9 turn ON bit 00, word n. Similarly, the combination of DATA 7 and STB7 turn ON bit 15, word n+3. The value of word n depends on where the Unit is mounted on the Rack. For details, refer to the *C1000H/C2000H Operation Manual*.

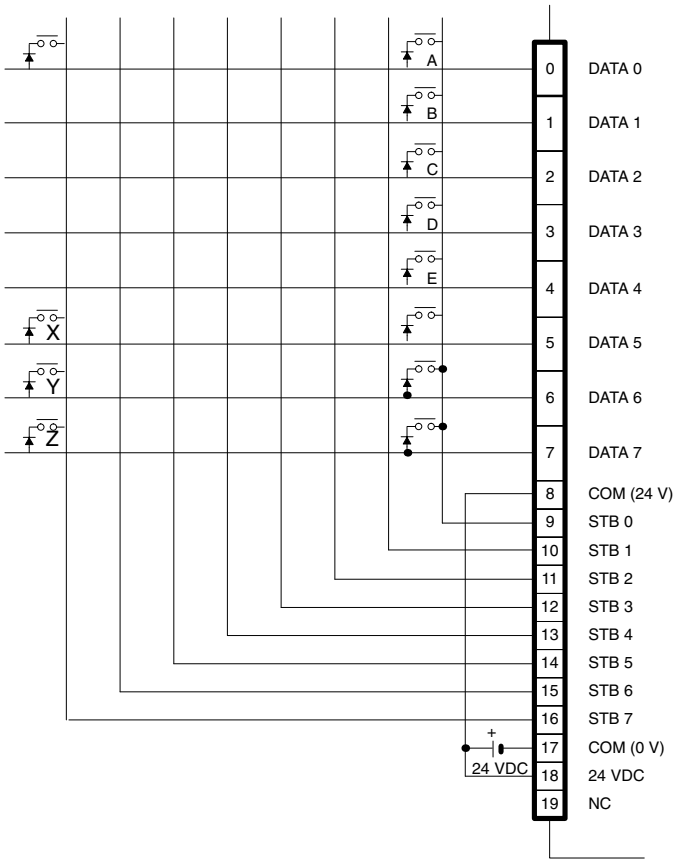

The table below shows the combinations made possible when the keyboard is wired as shown in the figure above.

Point Number	15	14	13	12	11	10	09	08	07	06	05	04	03	02	01	00
word n												E	D	C	B	A
word n + 1																
word n + 2																
word n + 3	Z	Y	X													

Note Because the DC Input Unit is operated on an extremely small current, make sure there is adequate distance between the DC Input Unit wires and high-tension equipment or power lines. If this cannot be avoided, use shielded cables when wiring the DC Input Unit. Be sure to keep the total length of the wires less than 10 m.

Connection Example 2 (Digital Switches)

This example shows how the ID212 DC Input Unit can be wired using digital switches. Just as the keys on the keyboard can access different combinations of words and bits, the digital switches can access different combinations of words and bits. For example, the combination of switch no. 1 and point 00 access word bit 00, word n.

However, for the sake of simplicity the figure below shows the digital switches wired to control 32 bits instead of 64 bits as was shown in Example 1. Wire STB4, STB5, STB6, and STB7 to access an additional 32 bits.

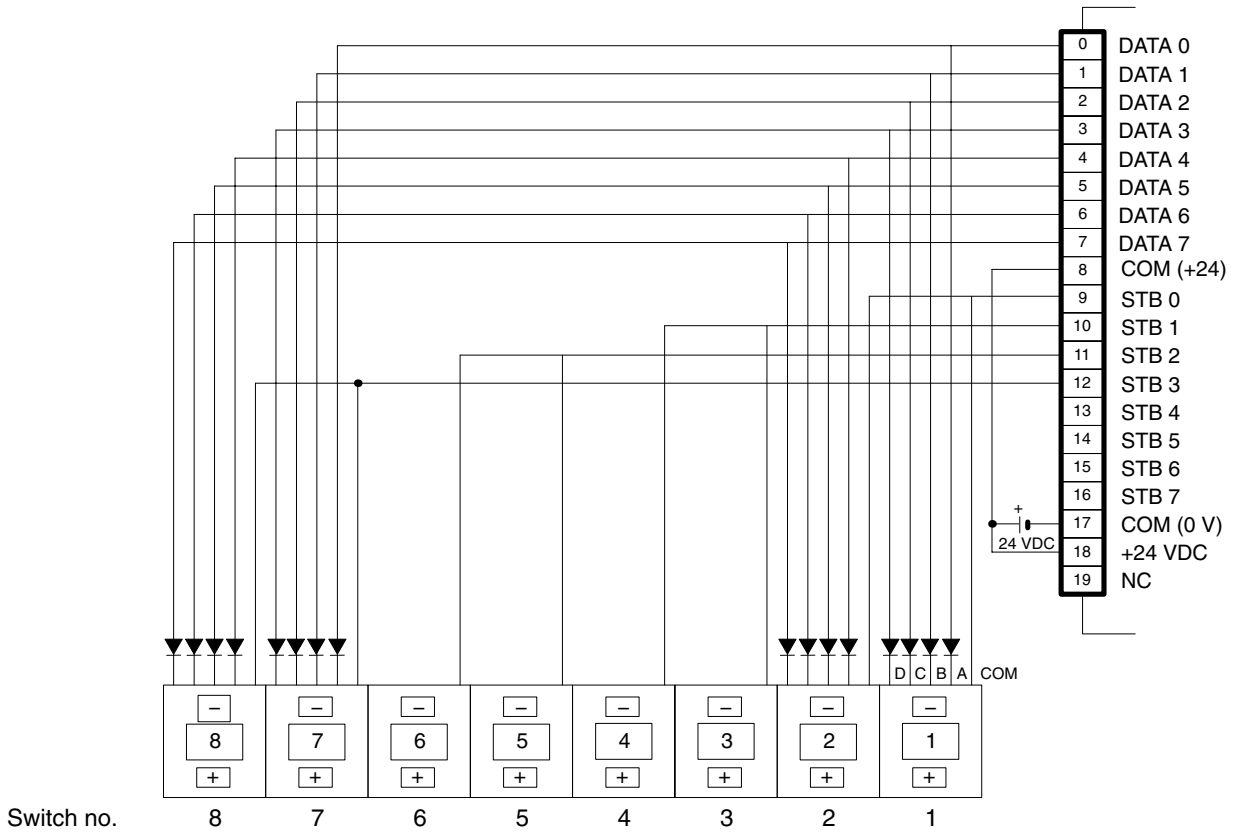

The table below shows the combinations made possible when the digital switches are wired as shown in the figure above.

Point Number	15	14	13	12	11	10	09	08	07	06	05	04	03	02	01	00
word n	Switch no. 4				Switch no. 3				Switch no. 2				Switch no. 1			
	0	1	0	0	0	0	1	1	0	0	1	1	0	0	0	1
	STB 1								STB 0							
word n + 1	Switch no. 8				Switch no. 7				Switch no. 6				Switch no. 5			
	1	0	0	0	0	1	1	1	0	1	1	0	0	1	0	1
	STB 3								STB 2							

Timing

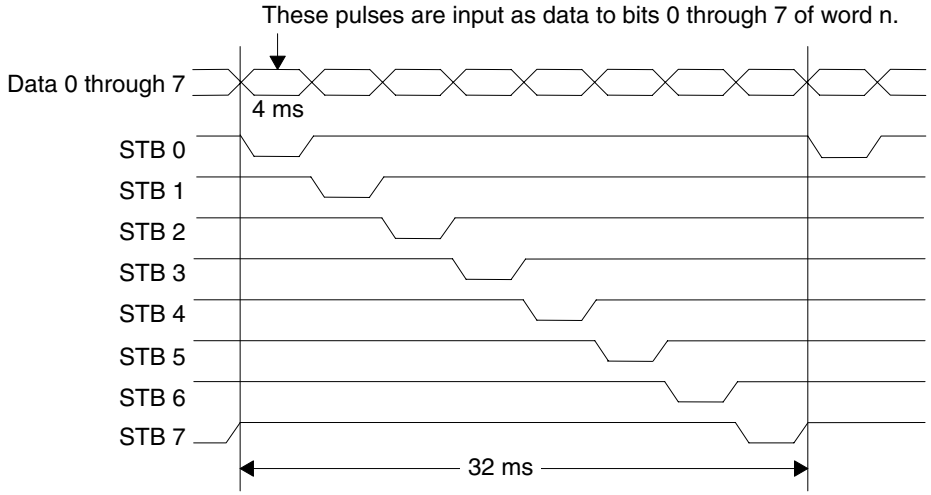

DC Input Units Continued

	3G2A5-ID215	3G2A5-ID218
Input Voltage	12 to 24 VDC $^{+10\%}/_{-15\%}$	
Input Impedance	2.2 kΩ	
Input Current	10 mA typical (at 24 VDC)	
ON Voltage	10.2 VDC min.	
OFF Voltage	3.0 VDC max.	
ON Response Time	15 ms max.	1.5 ms max.
OFF Response Time	15 ms max.	1.5 ms max.
No. of Points	32 (8 points/common, 4 circuits)	
Internal Current Consumption	160 mA 5 VDC max.	260 mA 5 VDC max.
Weight	450 grams max.	
Circuit Configuration	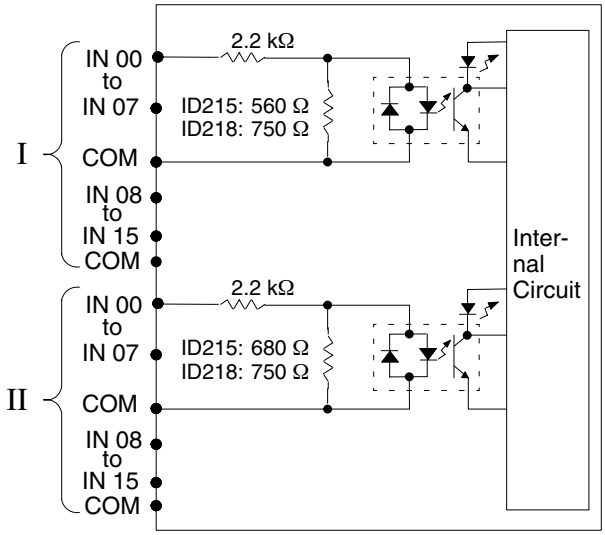	
Terminal Connections	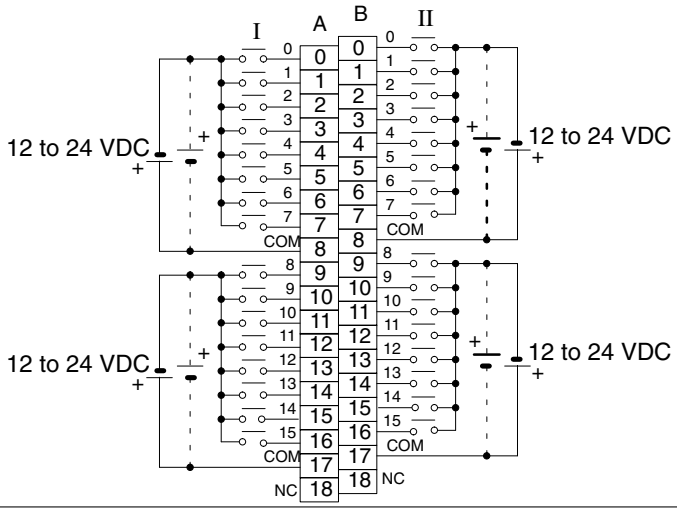	
Dimensions	B-shape	

DC Input Units Continued

	3G2A5-ID219
Input Voltage	24 VDC $^{+10\%}/_{-15\%}$
Input Impedance	3.3 kΩ
Input Current	7 mA typical (at 24 VDC)
ON Voltage	16.0 VDC min.
OFF Voltage	5.0 VDC max.
ON Response Time	1.5 ms max.
OFF Response Time	1.5 ms max.
No. of Points	64 (8 points/common, 8 circuits) (No. of contacts that can be turned ON changes depending on ambient temperature. See the characteristic data below.)
Internal Current Consumption	340 mA 5 VDC max.
Weight	600 grams max.
Circuit Configuration	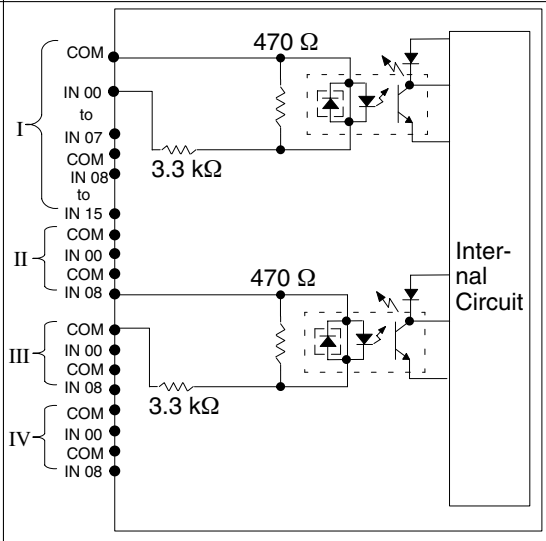 **Note**: Components within the dashed lines were added to Units from lot no. □□52 (May 1992) onwards. No. of points that can be turned ON vs. temperature 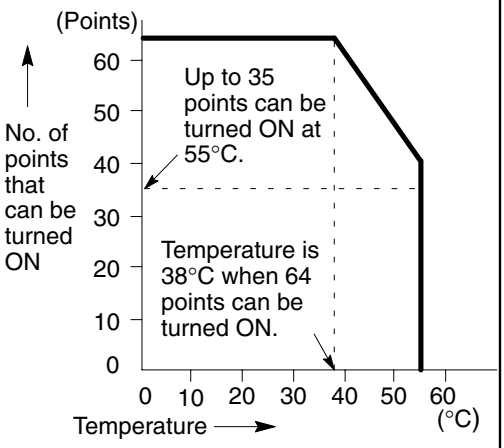
Terminal Connections	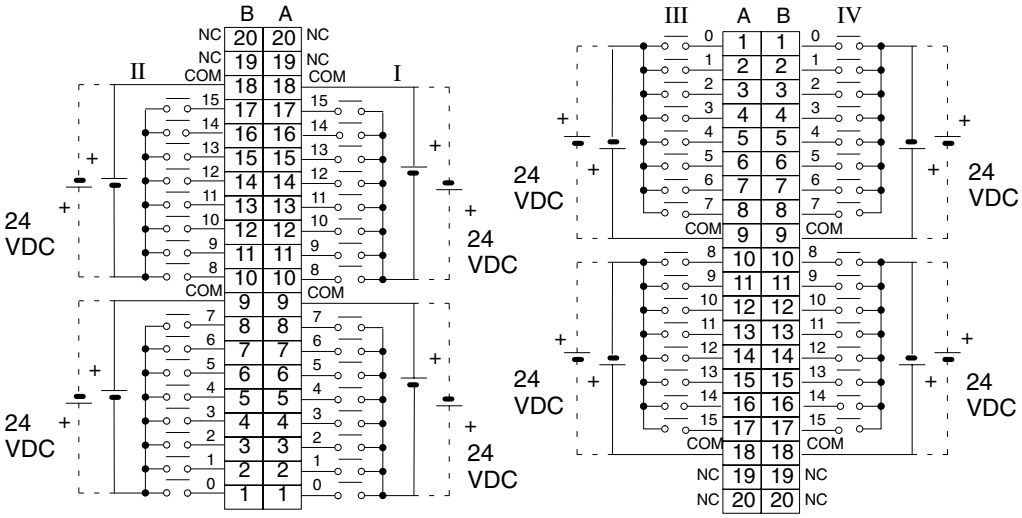 **Note**: Components within the dashed lines were added to Units from lot no. □□52 (May 1992) onwards.
Dimensions	D-shape

DC Input Units Continued

	3G2A5-ID114
Input Voltage	12 VDC $^{+10\%}/_{-15\%}$
Input Impedance	1.5 kΩ
Input Current	7 mA typical (at 12 VDC)
ON Voltage	8.0 VDC min.
OFF Voltage	3.0 VDC max.
ON Response Time	1.5 ms max.
OFF Response Time	1.5 ms max.
No. of Points	64 (8 points/common, 8 circuits)
Internal Current Consumption	340 mA 5 VDC max.
Weight	600 grams max.
Circuit Configuration	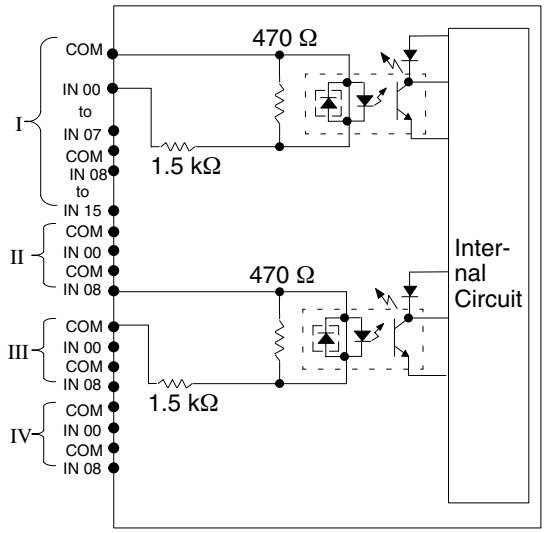 **Note**: Components within the dashed lines were added to Units from lot no. □□52 (May 1992) onwards.
Terminal Connections	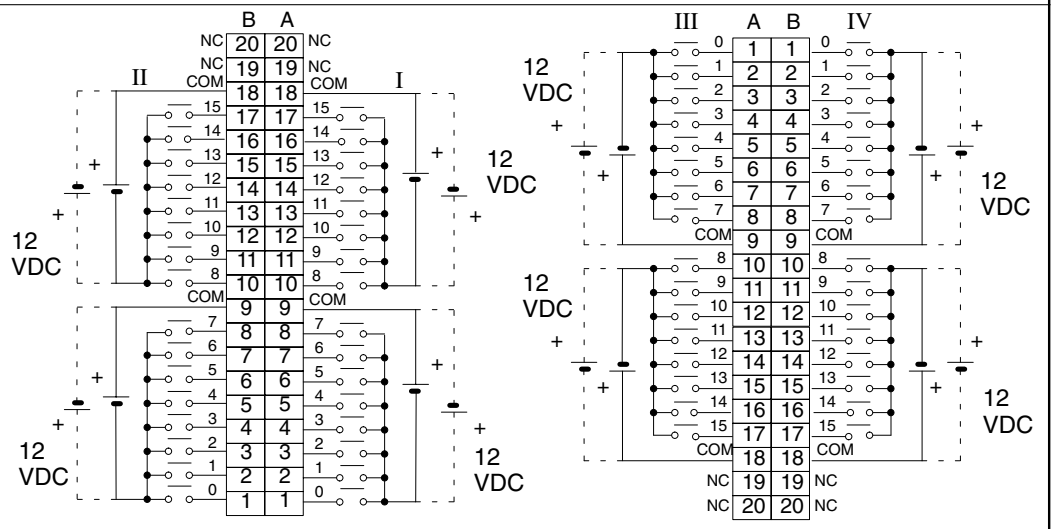 **Note**: Components within the dashed lines were added to Units from lot no. □□52 (May 1992) onwards.
Dimensions	D-shape

DC Input Units Continued

	3G2A5-ID218CN
Input Voltage	12 to 24 VAC $^{+10\%}/_{-15\%}$
Input Impedance	2.2 kΩ
Input Current	10 mA typical (at 24 VDC)
ON Voltage	10.2 VDC min.
OFF Voltage	3.0 VDC max.
ON Response Time	1.5 ms max.
OFF Response Time	1.5 ms max.
No. of Points	32 (8 points/common, 4 circuits)
Internal Current Consumption	200 mA 5 VDC max.
Weight	450 grams max.
Circuit Configuration	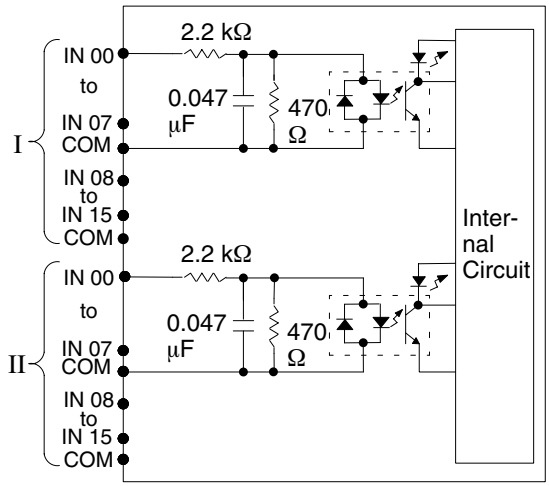
Terminal Connections	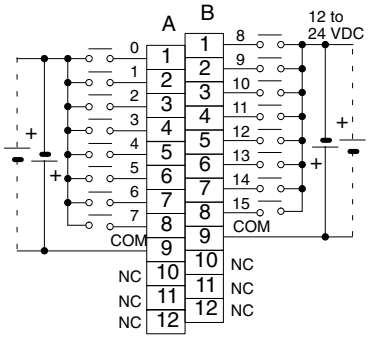
Dimensions	E-shape, with no 4-terminal block

TTL Input Units

	3G2A5-ID501CN
Input Voltage	5 VDC ±10%
Input Impedance	1 kΩ
Input Current	3.5 mA typical (at 24 VDC)
ON Voltage	3 VDC min.
OFF Voltage	1 VDC max.
ON Response Time	1.5 ms max.
OFF Response Time	1.5 ms max.
No. of Points	32 (8 points/common, 4 circuits)
Internal Current Consumption	200 mA 5 VDC max.
Weight	450 grams max.
Circuit Configuration	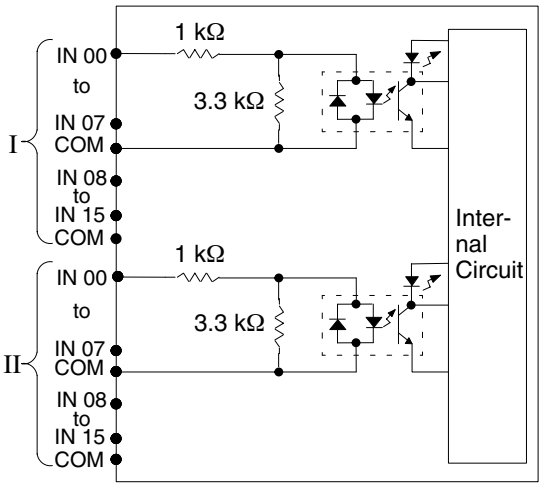
Terminal Connections	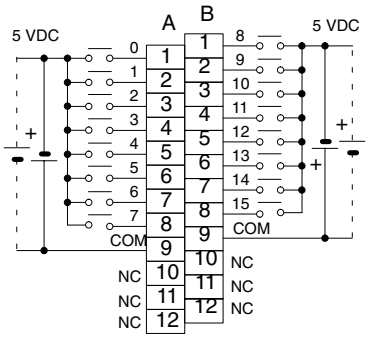 Use a synchronous TTL buffer. (TTL/LS-TTL/CMOS buffer) 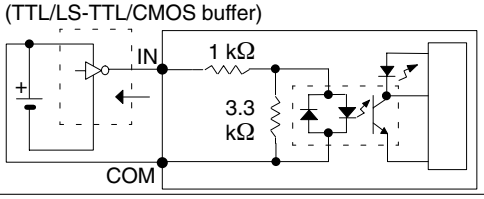
Dimensions	E-shape, with no 4-terminal block

Interrupt Input Unit

	3G2C5-ID216
Input Voltage	12 to 24 VDC $^{+10\%}/_{-15\%}$ (nonpolar)
Input Impedance	1.5 kΩ
Input Current	13 mA typical (at 24 VDC)
ON Voltage	10.2 VDC min.
OFF Voltage	3.0 VDC max.
ON Response Time	1 ms max.
OFF Response Time	1.5 ms max.
No. of Points	8 (independent common)
Internal Current Consumption	5 VDC 200 mA max.
Weight	450 grams max.
Circuit Configuration	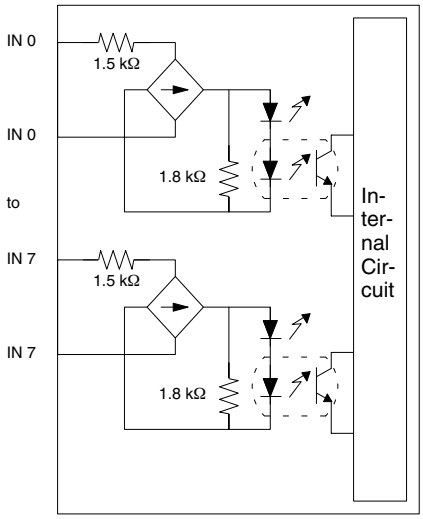
Terminal Connections	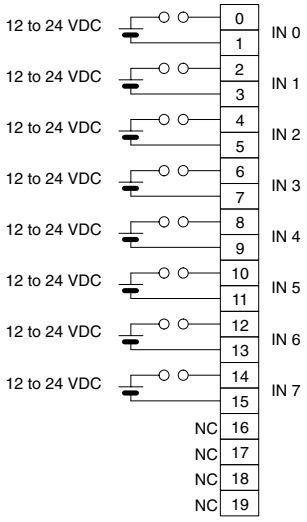 **Caution** Up to 4 Units can be mounted to the CPU Rack of the C1000H or the C2000H Simplex. Do not mount to the C2000H Duplex or Expansion Racks.
Dimensions	A-shape

AC Input Units

	3G2A5-IA121	3G2A5-IA222
Input Voltage	100 to 120 VAC $^{+10\%}/_{-15\%}$ 50/60 Hz	200 to 240 VAC $^{+10\%}/_{-15\%}$ 50/60 Hz
Input Impedance	9.7 kΩ (50 Hz), 8 kΩ (60 Hz)	22 kΩ (50 Hz), 18 kΩ (60 Hz)
Input Current	10 mA typical (at 100 VAC)	10 mA typical (at 200 VAC)
ON Voltage	60 VAC min.	120 VAC min.
OFF Voltage	20 VAC max.	40 VAC max.
ON Response Time	35 ms max.	35 ms max.
OFF Response Time	55 ms max.	55 ms max.
No. of Points	16 (8 points/common, 2 circuits)	16 (8 points/common, 2 circuits)
Internal Current Consumption	180 mA 5 VDC max.	180 mA 5 VDC max.
Weight	450 grams max.	450 grams max.
Circuit Configuration	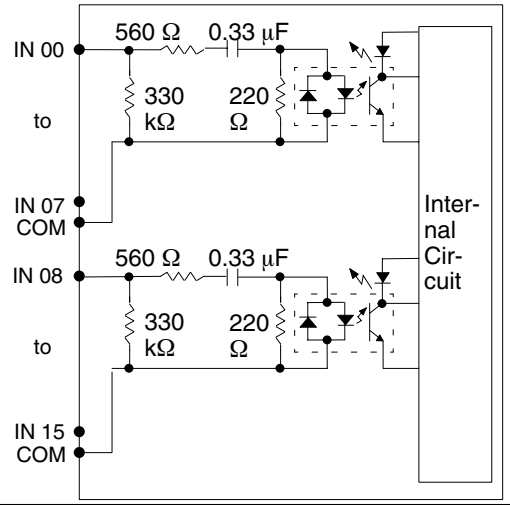	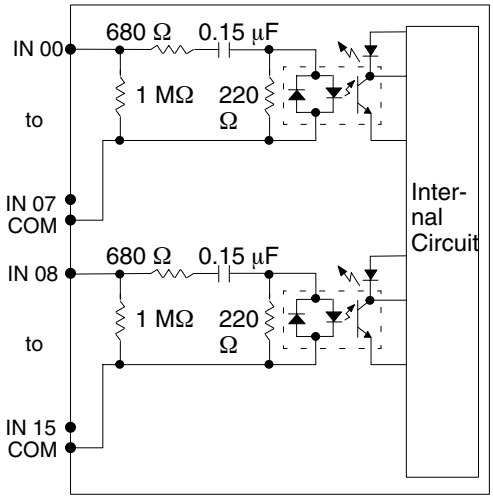
Terminal Connections	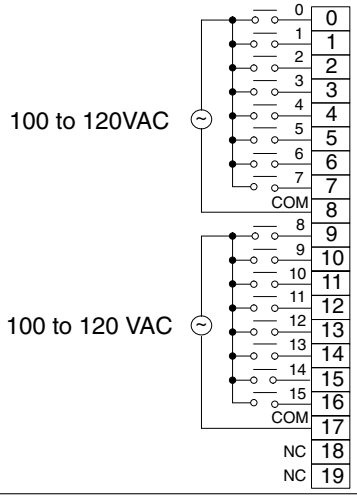	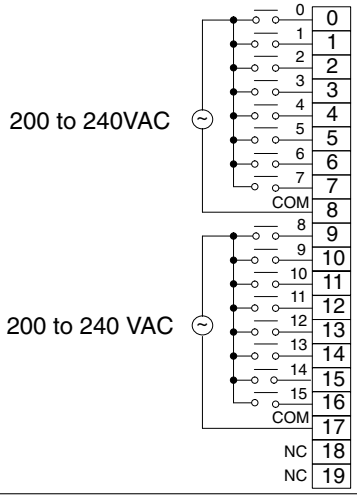
Dimensions	A-shape	A-shape

AC Input Units Continued

	3G2A5-IA122	3G2A5-IA223
Input Voltage	100 to 120 VAC $^{+10\%}/_{-15\%}$ 50/60 Hz	200 to 240 VAC $^{+10\%}/_{-15\%}$ 50/60 Hz
Input Impedance	9.7 kΩ (50 Hz), 8 kΩ (60 Hz)	22 kΩ (50 Hz), 18 kΩ (60 Hz)
Input Current	10 mA typical (at 100 VAC)	10 mA typical (at 200 VAC)
ON Voltage	60 VAC min.	120 VAC min.
OFF Voltage	20 VAC max.	40 VAC max.
ON Response Time	35 ms max.	35 ms max.
OFF Response Time	55 ms max.	55 ms max.
No. of Points	32 (8 points/common, 4 circuits)	32 (8 points/common, 4 circuits)
Internal Current Consumption	180 mA 5 VDC max.	180 mA 5 VDC max.
Weight	600 grams max.	600 grams max.
Circuit Configuration	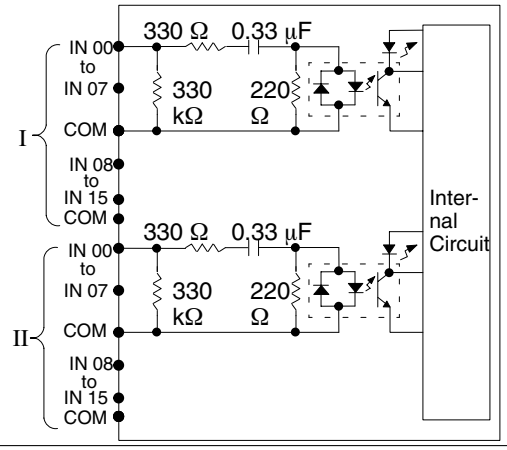	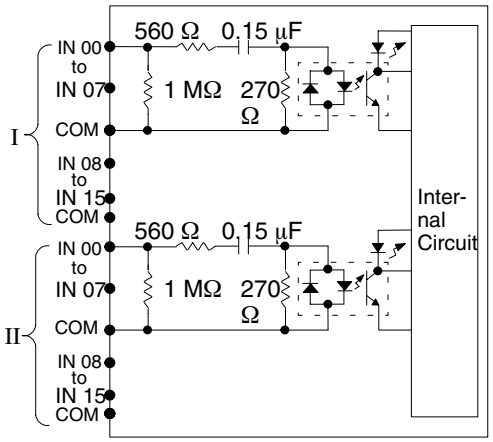
Terminal Connections	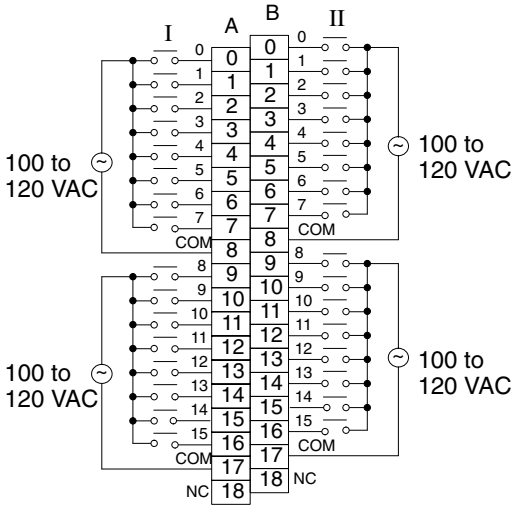	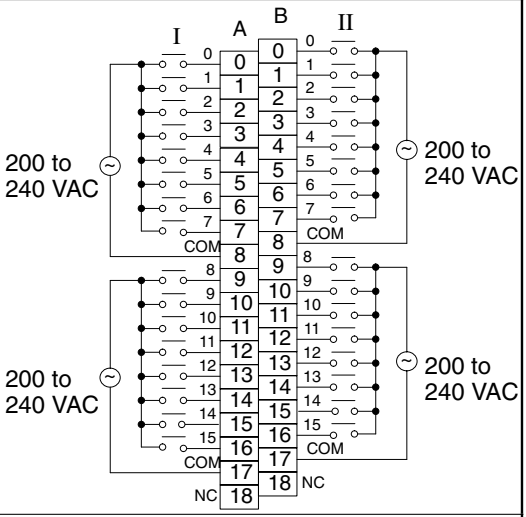
Dimensions	C-shape	C-shape

AC/DC Input Units

	3G2A5-IM211	3G2A5-IM212
Input Voltage	12 to 24 VAC/DC $^{+10\%}/_{-15\%}$ 50/60 Hz	12 to 24 VAC/DC $^{+10\%}/_{-15\%}$ 50/60 Hz
Input Impedance	1.8 Ω	2.2 kΩ
Input Current	10 mA typical (at 24 VDC)	10 mA typical (at 24 VDC)
ON Voltage	10.2 VDC min.	10.2 VDC min.
OFF Voltage	3.0 VDC max.	3.0 VDC max.
ON Response Time	15 ms max.	15 ms max.
OFF Response Time	15 ms max.	15 ms max.
No. of Points	16 (8 points/common, 2 circuits)	32 (8 points/common, 4 circuits)
Internal Current Consumption	10 mA 5 VDC max.	200 mA 5 VDC max.
Weight	450 grams max.	500 grams max.
Circuit Configuration	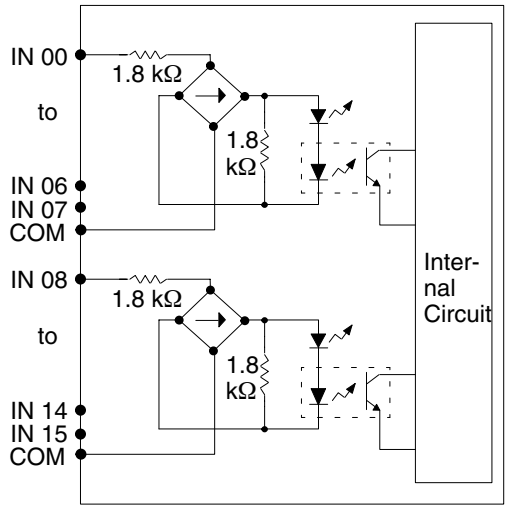	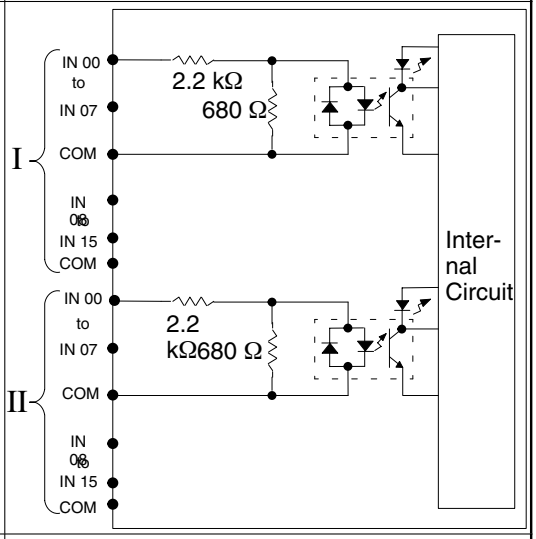
Terminal Connections	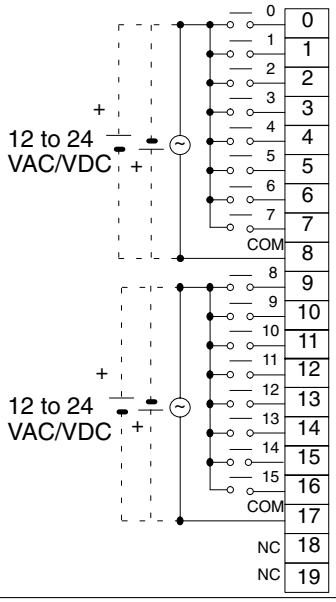	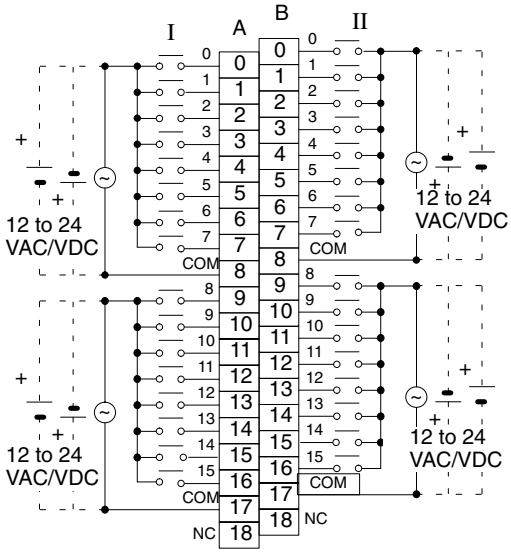
Dimensions	A-shape	A-shape

Contact Output Units

	3G2A5-OC221	3G2A5-OC223
Max. switching Capacity	2 A 250 VAC (cos of phase angle= 1), 0.5 A 250 VAC (cos of phase angle= 0.4), 2 A 24 VDC (8 A/common,16 A/Unit)	2 A 250 VAC (cos of phase angle= 1), 0.5 A 250 VAC (cos of phase angle= 0.4), 2 A 24 VDC (32 A/Unit)
Min. switching Capacity	10 mA 5 VDC	10 mA 5 VDC
Power for External Supply	Voltage: 24 VDC ±10 % Current: 10 mA/point, 160 mA/Unit	Voltage: 24 VDC ±10 % Current: 10 mA/point, 160 mA/Unit
Bit	G6B-114P-FD-US-M (24 VDC) w/socket	G6B-114P-FD-US-M (24 VDC) w/socket
Service Life of Relay	Electrical: 300,000 operations (resistive load) 100,000 operations (inductive load) Mechanical: 50,000,000 operations	Electrical: 300,000 operations (resistive load) 100,000 operations (inductive load) Mechanical: 50,000,000 operations
ON Response Time	15 ms max.	15 ms max.
OFF Response Time	15 ms max.	15 ms max.
No. of Points	16 (8 points/common, 2 circuits)	16 (independent common)
Internal Current Consumption	100 mA 5 VDC max.	100 mA 5 VDC max.
Weight	450 grams max.	450 grams max.
Circuit Configuration	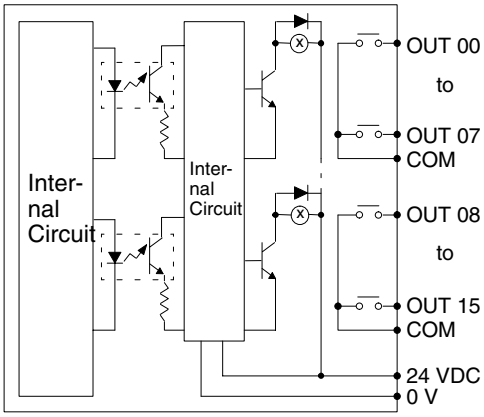 Relays are mounted on sockets and are replaceable.	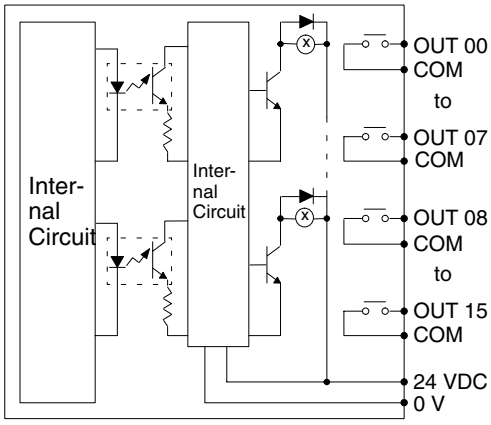 Relays are mounted on sockets and are replaceable.
Terminal Connections	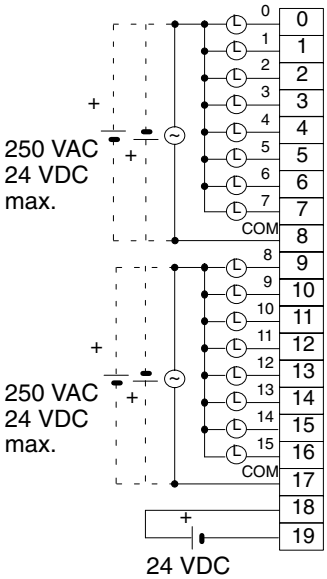	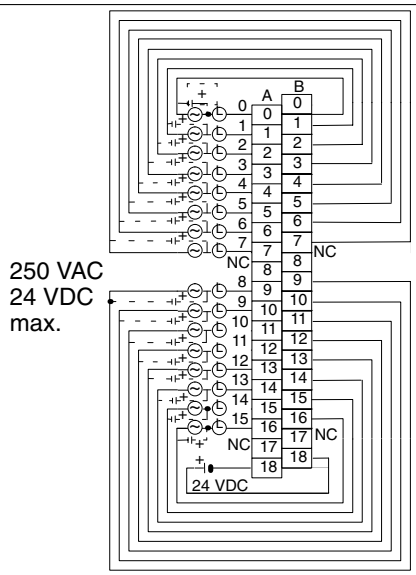
Dimensions	A-shape	B-shape

Contact Output Units Continued

	3G2A5-OC224-E
Max. switching Capacity	2 A 250 VAC (cos of phase angle= 1), 0.5 A 250 VAC (cos of phase angle= 0.4), 2 A 24 VDC (8 A/common, 32 A/Unit)
Min. switching Capacity	10 mA 5 VDC
Power for External Supply	Voltage: 24 VDC ±10% Current: 10 mA/point, 320 mA/Unit
Bit	G6B-114P-FD-US-M (24 VDC) w/socket
Service Life of Relay	Electrical: 300,000 operations (resistive load) 100,000 operations (inductive load) Mechanical: 50,000,000 operations
ON Response Time	15 ms max.
OFF Response Time	15 ms max.
No. of Points	32 (8 points/common, 4 circuits)
Internal Current Consumption	200 mA 5 VDC max.
Weight	600 grams max.
Circuit Configuration	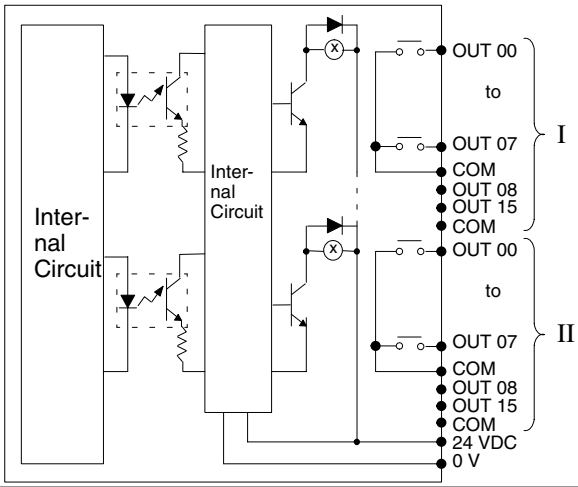
Terminal Connections	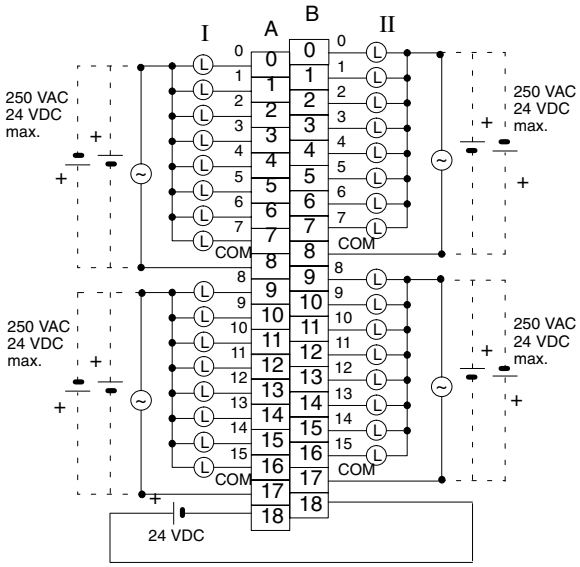
Dimensions	C-shape

Triac Output Units

	3G2A5-OA121	3G2A5-OA222
Max. switching Capacity	1 A 132 VAC, 50/60 Hz (4 A/common, 5 A/Unit)	1 A 250 VAC, 50/60 Hz (4 A/common, 5 A/Unit)
Min. switching Capacity	10 mA (resistive load) 40 mA (inductive load) 10 VAC	10 mA (resistive load) 40 mA (inductive load) 10 VAC
Leakage Current	3 mA (100 VAC) max.	3 mA (100 VAC) max., 6 mA (200 VAC) max.
Residual Voltage	1.2 V max.	1.2 V max.
ON Response Time	1 ms max.	1 ms max.
OFF Response Time	1/2 of load frequency max.	1/2 of load frequency max.
No. of Points	16 (8 points/common, 2 circuits)	16 (8 points/common, 2 circuits)
Internal Current Consumption	300 mA 5 VDC max.	300 mA 5 VDC max.
Fuse Capacity	5 A 250 V (two fuses)	5 A 250 V (two fuses)
Weight	500 grams max.	500 grams max.
Circuit Configuration	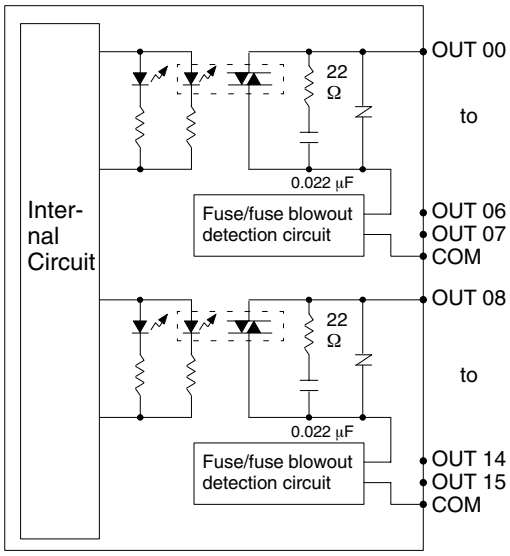 The fuse used in this diagram is 5 A 250 V 6.35 dia. x 32.	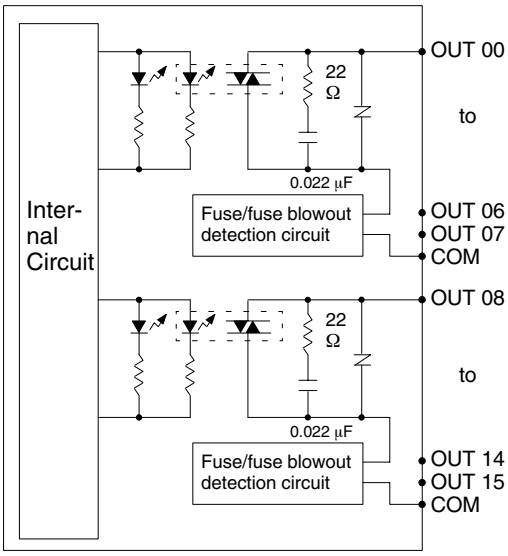 The fuse used in this diagram is 5 A 250 V 6.35 dia. x 32.
Terminal Connections	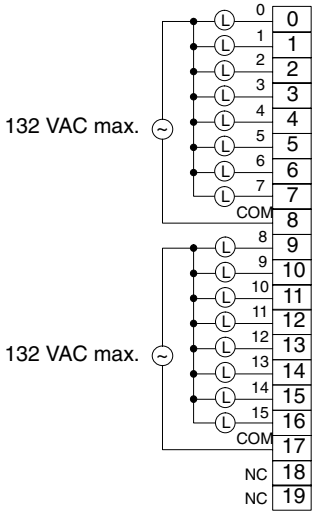	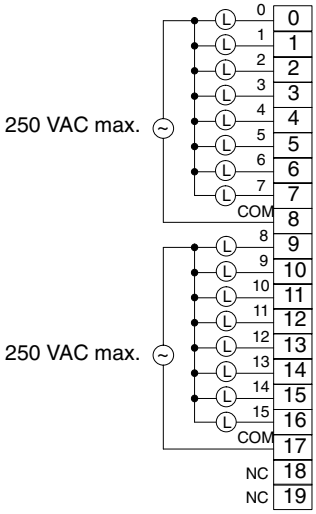
Dimensions	A-shape	A-shape

Triac Output Units Continued

	3G2A5-OA223	C500-OA225
Max. switching Capacity	1 A 250 VAC, 50/60 Hz (4 A/common, 5 A/unit)	1 A 250 VAC, 50/60 Hz (4 A/common, 5 A/unit)
Min. switching Capacity	10 mA (resistive load) 40 mA (inductive load) 10 VAC	10 mA (resistive load) 40 mA (inductive load) 10 VAC
Leakage Current	3 mA (100 VAC) max., 6 mA (200 VAC) max.	2 mA (100 VAC) max., 5 mA (200 VAC) max.
Residual Voltage	1.2 V max.	1.6 V max.
ON Response Time	1 ms max.	1 ms max.
OFF Response Time	1/2 of load frequency max.	1/2 of load frequency max.
No. of Points	24 (8 points/common, 3 circuits)	32 (8 points/common, 4 circuits)
Internal Current Consumption	450 mA 5 VDC max.	200 mA 5 VDC max.
Fuse Capacity	5 A 250 V (three fuses)	Not provided
Power for External Supply	---	320 mA 5 VDC ±10% max.
Weight	600 grams max.	600 grams max.
Circuit Configuration	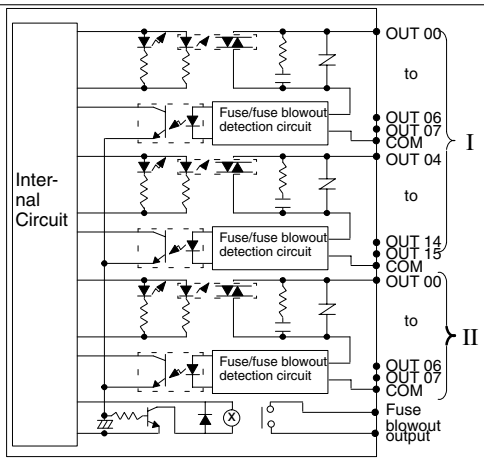	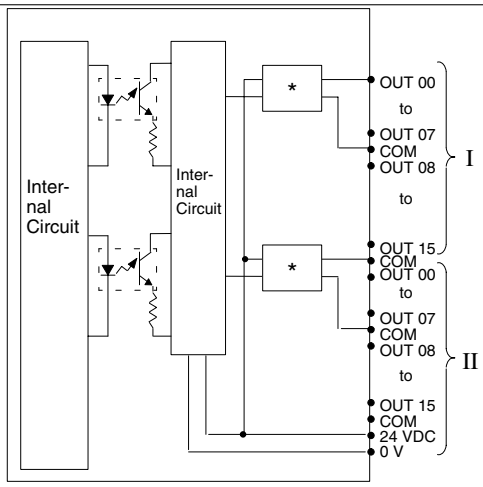 * G3S-201PL 24 VDC
Terminal Connections	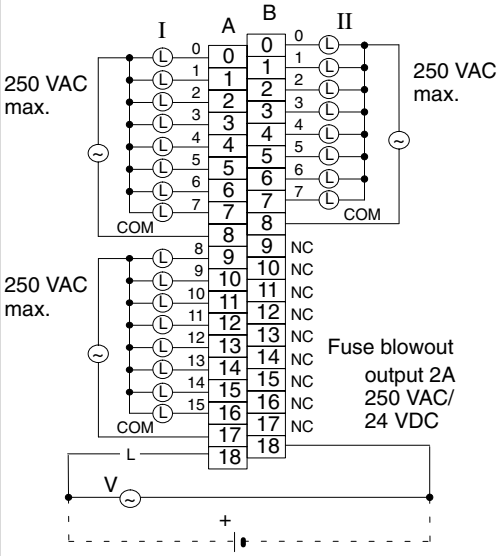	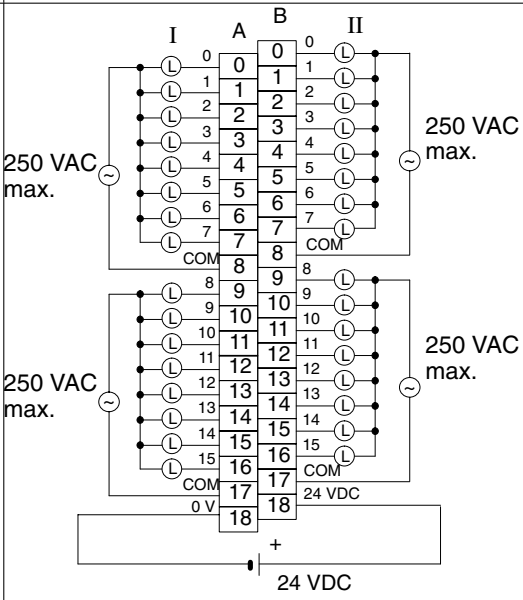
Dimensions	C-shape	C-shape

Triac Output Units Continued

	C500-OA226
Max. Switching Capacity	1.2 A 250 VAC, 50/60 Hz (4 A/common, 5 A/unit)
Max. Surge Current	15 A for 100 ms pulse width, 30 A for 10 ms pulse width
Min. Switching Capacity	100 mA at 10 VAC, 50 mA at 24 VAC 10 mA at 100 VAC, 10 mA at 240 VAC
Leakage Current	1.5 mA (120 VAC, 60 Hz) max., 3.0 mA (240 VAC, 60 Hz) max.
Residual Voltage	1.5 VAC max. for 100 to 600 mA, 1.5 VAC for 50 to 100 mA, 5.0 VAC for 10 to 50 mA
ON Response Time	1 ms max.
OFF Response Time	1/2 of load frequency + 1 ms max.
No. of Points	16 (8 points/common, 2 circuits)
Internal Current Consumption	450 mA at 5 VDC max.
Fuse Capacity	5 A, 250 V; 6.35 mm dia. x 32 mm (two fuses)
Power for External Supply	–
Weight	600 grams max.
Circuit Configuration	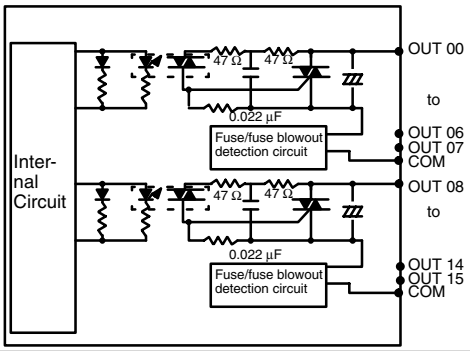
Terminal Connections	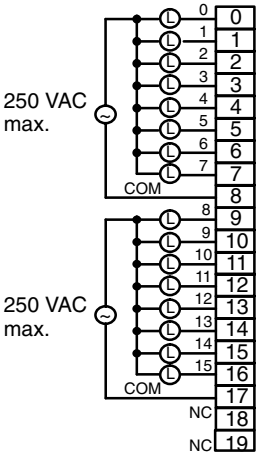
Dimensions	C-shape

Special Considerations for C500-OA225

The maximum current value allowed per point differs depending on the ambient temperature and the number of points per common that are ON simultaneously. The graph below shows the relationship between the allowable current per point and the number of points ON per common. Be sure not to exceed the values depicted in the graph.

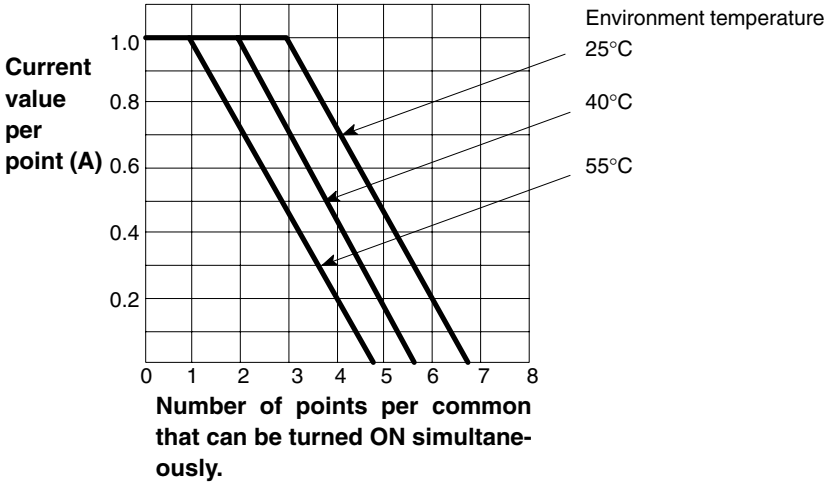

Number of Points Per Common Turned ON Simultaneously

The graph below shows the value of an surge current and the time it takes the current to level to a steady stream of current (current-carrying time). The curved line in the graph represents the maximum value of surge current at which the Unit can operate properly. It is suggested that when opening and closing a load with a large surge current, to keep the value of the surge current to half the value shown the graph (within the shaded area).

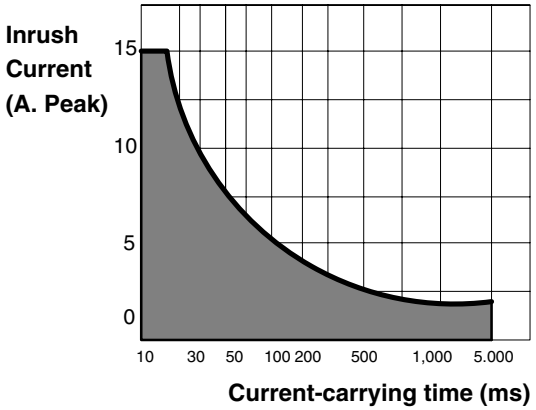

Transistor Output Units

	3G2A5-OD411	3G2A5-OD412
Max. switching Capacity	12 to 48 VDC $^{+10\%}/_{-15\%}$ 1A (4 A/common, 5 A/Unit)	12 to 48 VDC $^{+10\%}/_{-15\%}$ 0.3 A (4.8 A/Unit)
Leakage Current	0.1 mA max.	0.1 mA max.
Residual Voltage	1.4 V max.	1.5 V max.
ON Response Time	0.2 ms max.	0.2 ms max.
OFF Response Time	0.3 ms max.	0.3 ms max.
No. of Points	16 (16 points/common, 1 circuit)	32 (32 points/common, 1 circuit)
Internal Current Consumption	160 mA 5 VDC max.	230 mA 5 VDC max.
Fuse Capacity	5 A 250 V (two fuses)	1 per circuit, 1 total (not user replaceable)
Power for External Supply	50 mA 12 to 48 VDC ±10% max.	80 mA 12 to 48 VDC ±10% max.
Weight	500 grams max.	530 grams max.
Circuit Configuration	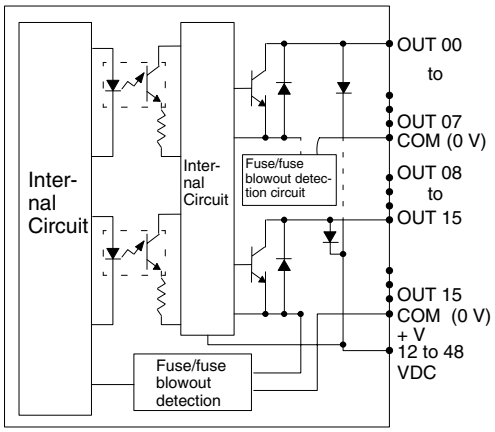	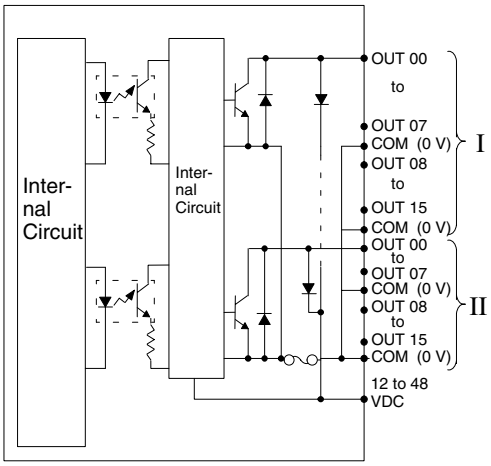
Terminal Connections	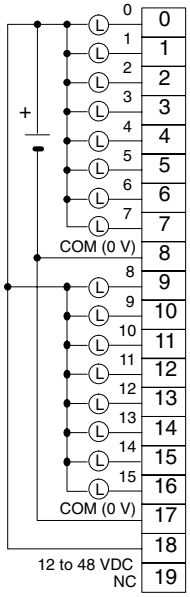 Note: Be sure to supply power to B18; otherwise current will leak through the load while the output is OFF. Because the commons are short-circuited internally, they cannot be used separately and must be wired according to the diagram.	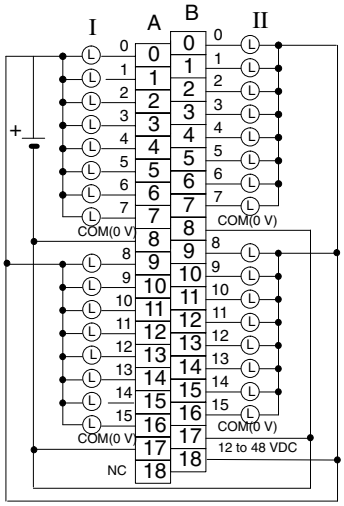 Note: Be sure to supply power to B18; otherwise current will leak through the load while the output is OFF. Because the commons are short-circuited internally, they cannot be used separately and must be wired according to the diagram.
Dimensions	A-shape	B-shape

Transistor Output Units Continued

	3G2A5-OD414
Max. switching Capacity	12 to 48 VDC $^{+10\%}/_{-15\%}$ 0.3 A (2.4 A/common, 4.8 A/Unit)
Leakage Current	0.1 mA max.
Residual Voltage	1.5 V max.
ON Response Time	0.2 ms max.
OFF Response Time	0.3 ms max.
No. of Points	32 (16 points/common, 2 circuits)
Internal Current Consumption	230 mA 5 VDC max.
Fuse Capacity	Not provided
Power for External Supply	80 mA min. 12 to 48 VDC ±10% max.
Weight	530 grams max.
Circuit Configuration	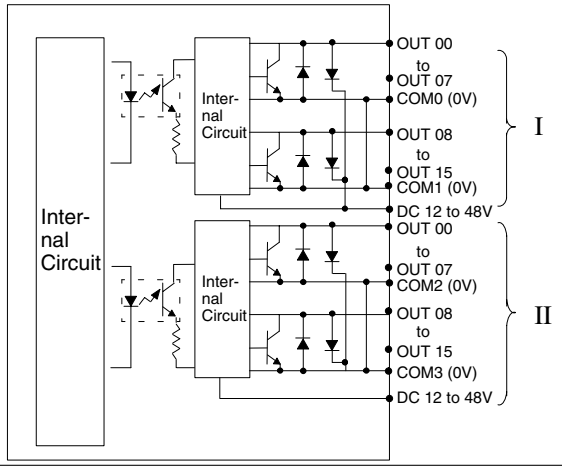
Terminal Connections	Note: Be sure to supply power to A18 and B18; otherwise current will leak through the load while the output is OFF. 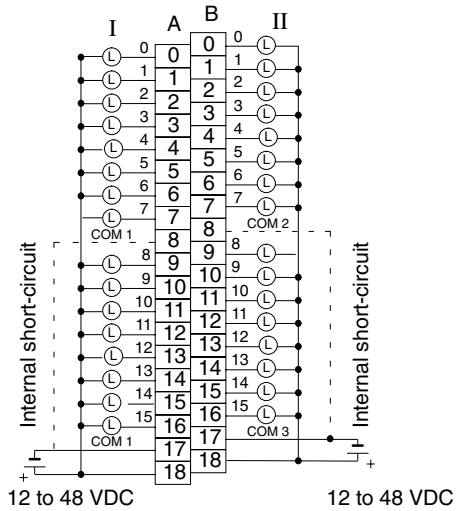
Dimensions	B-shape

Transistor Output Units Continued

	3G2A5-OD211	3G2A5-OD212
Max. switching Capacity	24 VDC $^{+10\%}/_{-15\%}$ 0.1 A	12 to 24 VDC $^{+10\%}/_{-15\%}$ 0.3 A (2.4 A/common, 4.8 A/Unit)
Leakage Current	0.1 mA max.	0.1 mA max.
Residual Voltage	1.5 V max.	1.5 V max.
ON Response Time	0.2 ms max.	0.2 ms max.
OFF Response Time	0.3 ms max.	0.3 ms max.
No. of Points	64 (Dynamic)	32 (16 points/common, 2 circuits)
Internal Current Consumption	300 mA 5 VDC max.	230 mA 5 VDC max.
Fuse Capacity	Not provided	1 per circuit, 2 total (not user replaceable)
Power for External Supply	50 mA 24 VDC ±10%	50 mA 12 to 24 VDC ±10%
Weight	450 grams max.	530 grams max.
Circuit Configuration	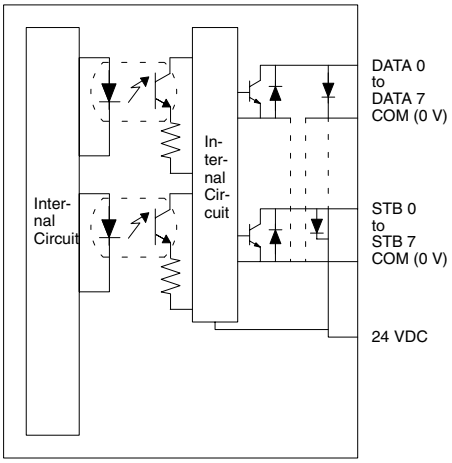 DATA: Positive logic output STB: Negative logic output	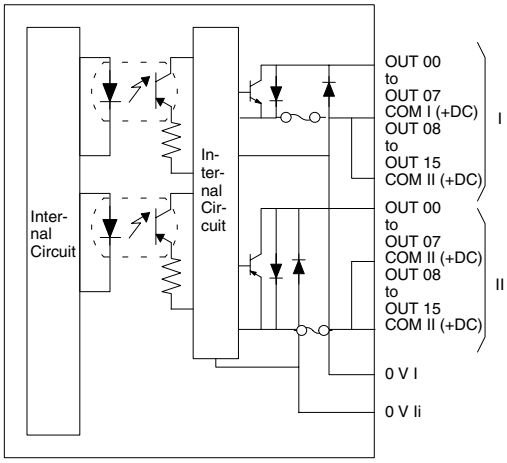
Terminal Connections	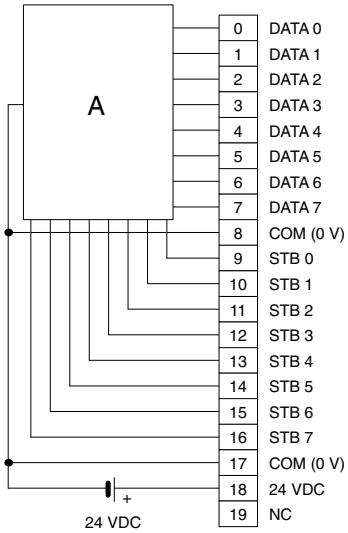 Refer to page 91 for wiring examples.	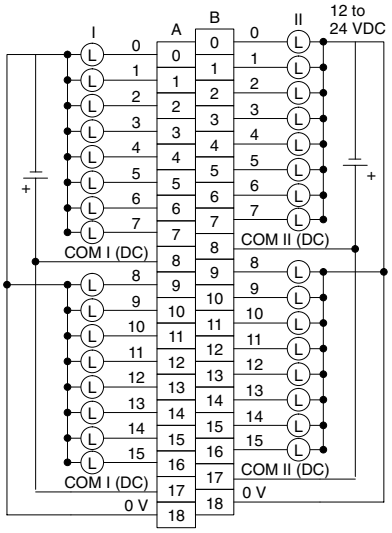 Note: A8 and A17 are connected internally, as are B8 and B17; they cannot be used independently. Because of insufficient current flow, wire according to the diagram.
Dimensions	A-shape	B-shape

DC Output Unit 3G2A5-OD211

By using the OD211 DC Output Unit, a large number of bits can be controlled through only 16 points. Just like the ID211 DC Input Unit, different combinations of points can access bits and words to control different outputs. Using this type of Unit can simplify wiring when many bits must be controlled. Up to 64 bits can be accessed.

Because the output data is positive logic, the terminal output goes high when the output data is logical 1. The strobe output is negative logic, so when a signal is output, the corresponding terminal goes low. Use positive logic output devices for the load of this Unit. The strobe output is cyclically and automatically output.

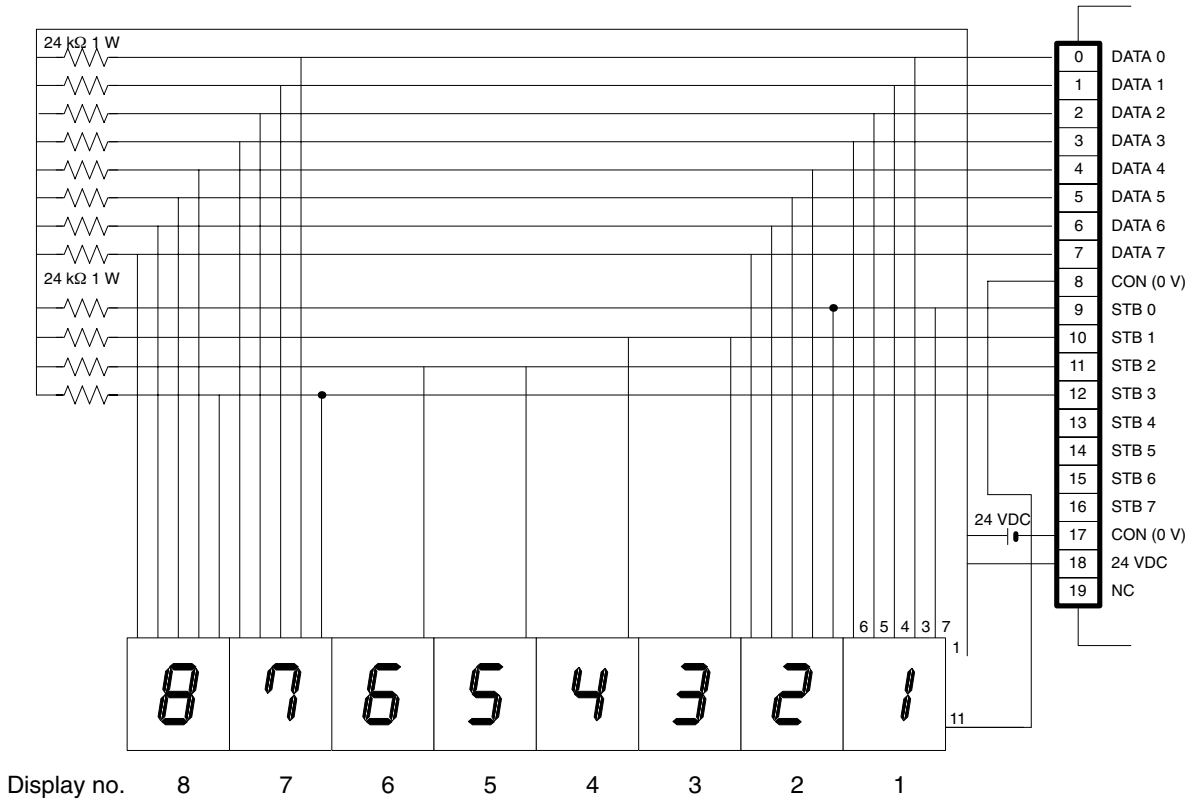

The table below shows the combinations made possible when the display is wired as shown in the figure on the preceding page. The value of word n depends on where the Unit is mounted on the Rack. For details, refer to the *C1000H/C2000H Operation Manual*.

Point Number	15	14	13	12	11	10	09	08	07	06	05	04	03	02	01	00
Data Number	07	06	05	04	03	02	01	00	07	06	05	04	03	02	01	00
word n	Display no. 4				Display no. 3				Display no. 2				Display no. 1			
	0	1	0	0	0	0	1	1	0	0	1	0	0	0	0	1
	STB 1								STB 0							
word n + 1	Display no. 8				Display no. 7				Display no. 6				Display no. 5			
	1	0	0	0	0	1	1	1	0	1	1	0	0	1	0	1
	STB 3								STB 2							

Note Because the DC Input Unit is operated on an extremely small current, make sure there is adequate distance between the DC Input Unit wires and high-tension equipment or power lines. If this cannot be avoided, use shielded cables when wiring the DC Input Unit. Be sure to keep the total length of the wires less than 10 m.

Timing

The following timing chart illustrates the operation of the Output Unit when wired as shown on the previous page.

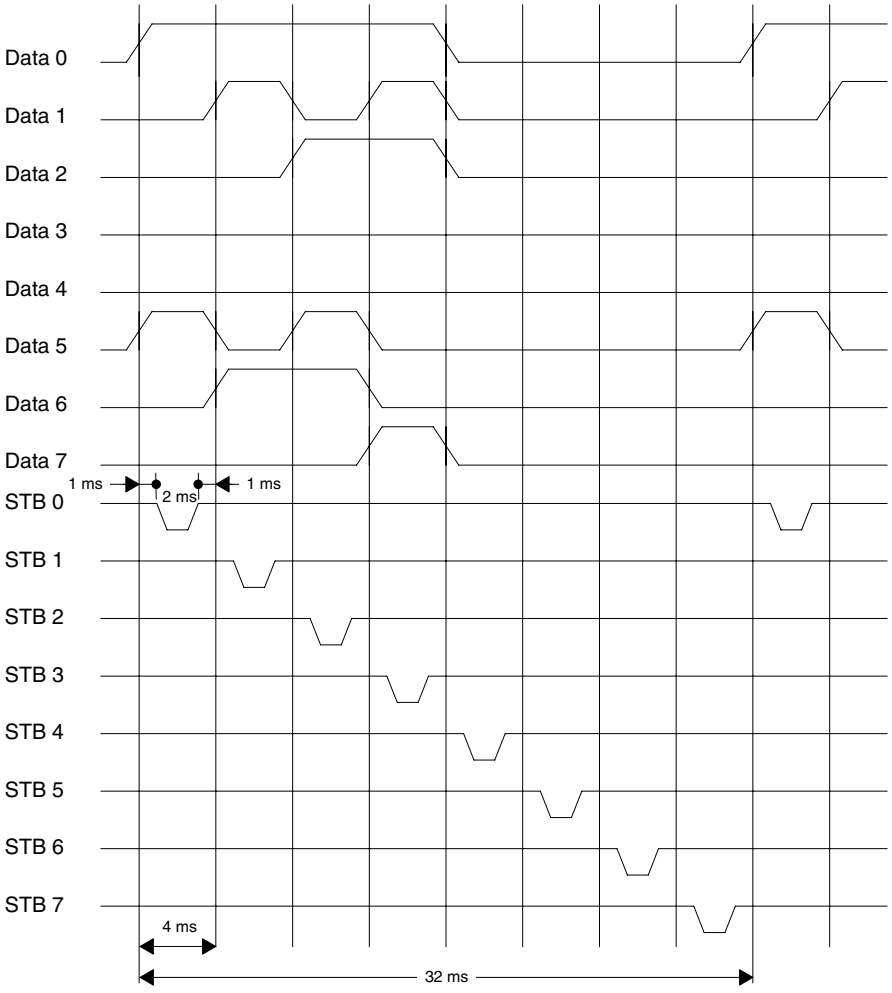

Data of bits 0 through 7 of word n are output as these pulses.

Transistor Output Units Continued

	3G2A5-OD213
Max. switching Capacity	16 mA/4.5 V to 100 mA/26.4 VDC (See chart below.) 800 mA/common, 6.4 A/Unit
Leakage Current	0.1 mA max.
Residual Voltage	0.4 V max.
ON Response Time	0.2 ms max.
OFF Response Time	0.3 ms max.
No. of Points	64 (8 points/common, 8 circuits)
Internal Current Consumption	460 mA 5 VDC max. (140 mA + 5 mA x no. of ON points)
Fuse Capacity	1 per circuit, 8 total (not user replaceable)
Power for External Supply	170 mA 26.4 VDC max. (2.6 mA x no. of ON points)
Weight	550 grams max.

	3G2A5-OD213

Circuit Configuration

Units manufactured on or before October 31st, 1999
(manufacturing numbers 31X9 or earlier*)

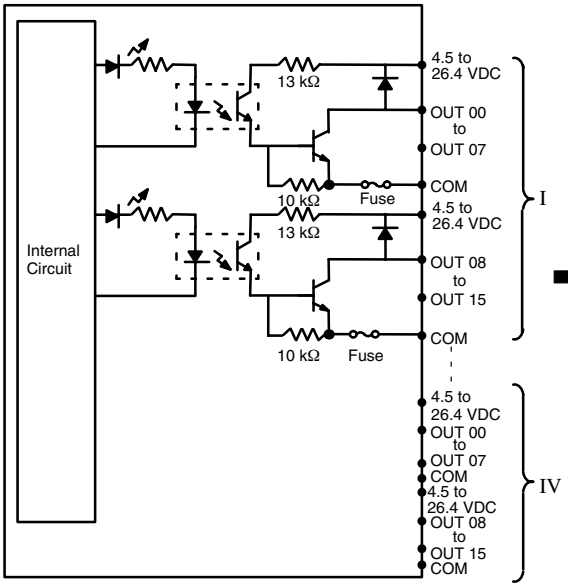

Units manufactured on or after November 1st, 1999
(manufacturing numbers 01Y9 or later*)

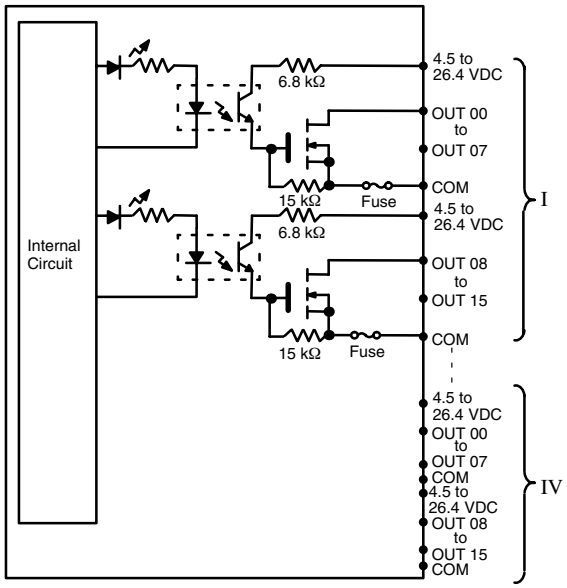

*Manufacturing Numbers

□□Y9

- Year: Last digit of calendar year; e.g., 1999→9, 2000→0
- Month: 1 to 9 (January to September), X (October), Y (November), Z (December)
- Day: 01 to 31

Max. switching capacity

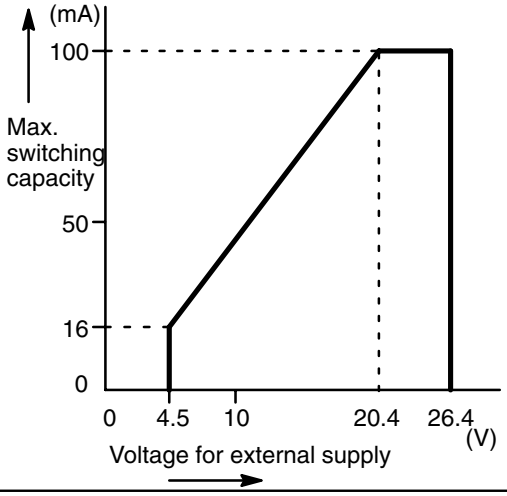

	3G2A5-OD213
Terminal Connections	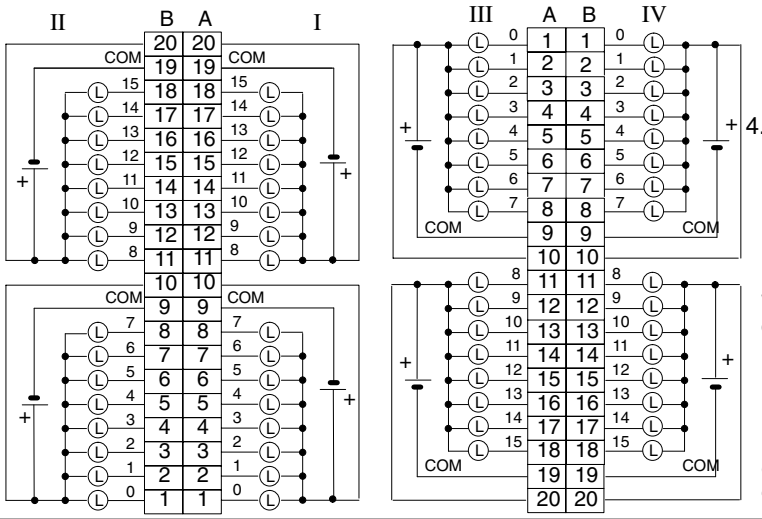 When wiring output circuits, be sure to use the correct polarity for the external power supplies. Wiring with incorrect polarity may result in erroneous operation of the load.
Dimensions	D-shape

Transistor Output Units Continued

	3G2A5-OD215	3G2A5-OD217
Max. switching Capacity	24 VDC ±10%, 50 mA/point	12 to 24 VDC $^{+10\%}/_{-15\%}$ 1 A (4 A/common, 5 A/Unit)
Leakage Current	---	0.1 mA max.
Residual Voltage	1.0 V max.	1.4 V max.
ON Response Time	0.2 ms max.	0.2 ms max.
OFF Response Time	0.3 ms max.	0.3 ms max.
No. of Points	16 (independent common)	16 (8 points/common, 2 circuits)
Internal Current Consumption	200 mA 5 VDC max.	160 mA 5 VDC max.
Fuse Capacity	Not provided	5 A 250 V (two fuses)
Power for External Supply	---	50 mA 12 to 24 VDC ±10% min.
Weight	530 grams max.	500 grams max.
Circuit Configuration	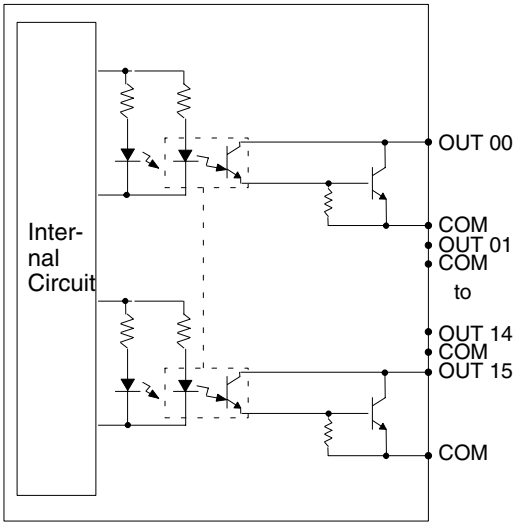	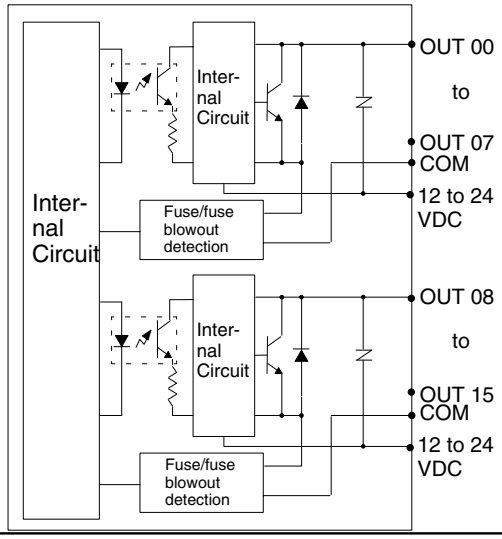

	3G2A5-OD215	3G2A5-OD217
Terminal Connections	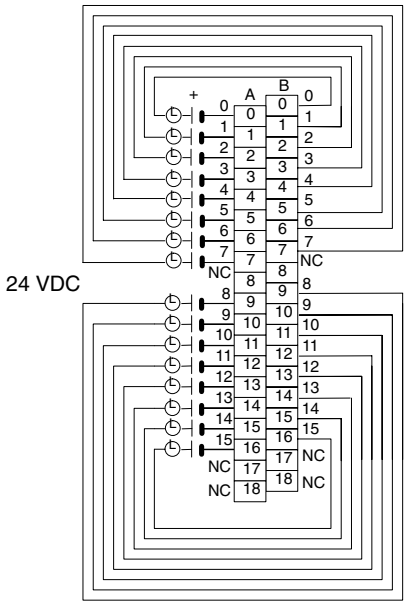	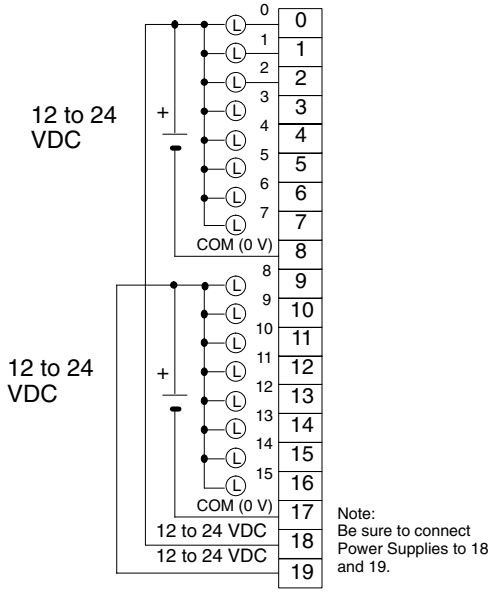
Dimensions	B-shape	A-shape

Transistor Output Units Continued

	C500-OD218	C500-OD219
Max. switching Capacity	12 to 24 VDC $^{+10\%}/_{-15\%}$ 0.3 A (2.4 A/common, 4.8 A/Unit)	12 to 24 VDC $^{+10\%}/_{-15\%}$ 2.1 A (8 A/common, 16 A/Unit)
Leakage Current	0.1 mA max.	0.1 mA max.
Residual Voltage	1.5 V max.	0.7 V max.
ON Response Time	0.2 ms max.	0.2 ms max.
OFF Response Time	0.3 ms max.	0.4 ms max.
No. of Points	32 (16 points/common, 2 circuits)	16 (8 points/common, 2 circuits)
Internal Current Consumption	230 mA 5 VDC max.	160 mA 5 VDC max.
Fuse Capacity	1 per circuit, 2 total (not user replaceable)	10 A 250 V (two fuses)
Power for External Supply	80 mA 12 to 24 VDC ±10% min.	100 mA 12 to 24 VDC ±10% min.
Weight	530 grams max.	550 grams max.

	C500-OD218	C500-OD219
Circuit Configuration	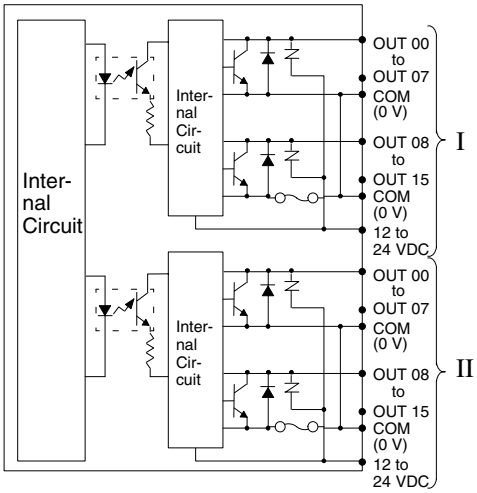	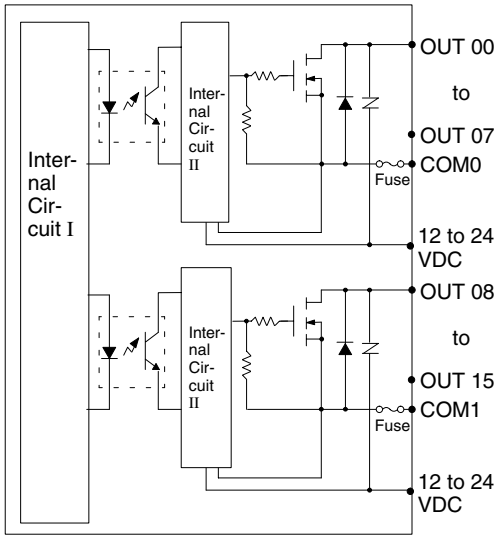
Terminal Connections	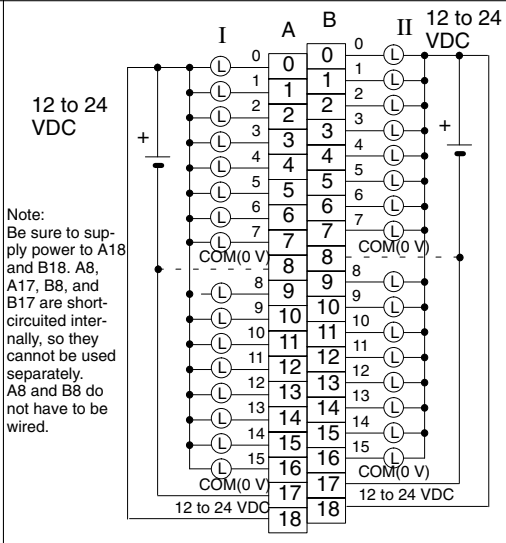 Note: Be sure to supply power to A18 and B18. A8, A17, B8, and B17 are short-circuited internally, so they cannot be used separately. A8 and B8 do not have to be wired.	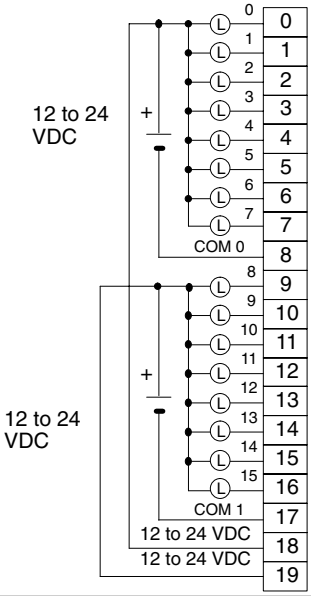 Note: Be sure to connect Power Supplies to 18 and 19.
Dimensions	B-shape	A-shape

Transistor Output Units Continued

	3G2A5-OD415CN
Max. switching Capacity	12 to 48 VDC $^{+10\%}/_{-15\%}$ 0.3 A (2.4 A/common, 4.8 A/Unit)
Leakage Current	0.1 mA max.
Residual Voltage	1.5 V max.
ON Response Time	0.2 ms max.
OFF Response Time	0.3 ms max.
No. of Points	32 (16 points/common, 2 circuits)
Internal Current Consumption	230 mA 5 VDC max.
Fuse Capacity	Not provided
Power for External Supply	80 mA 12 to 48 VDC ±10% min.
Weight	530 grams max.
Circuit Configuration	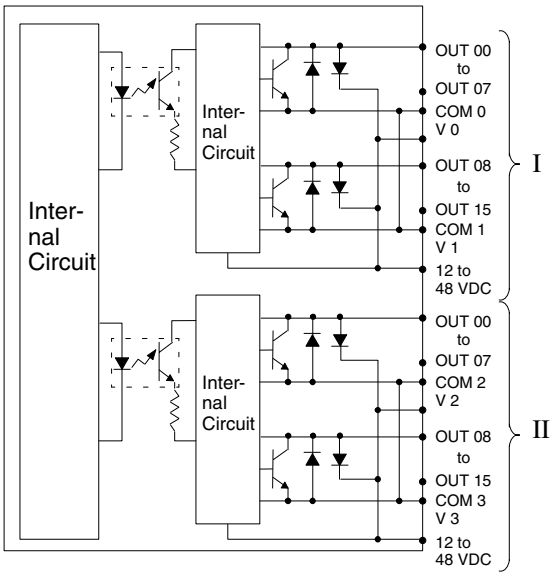
Terminal Connections	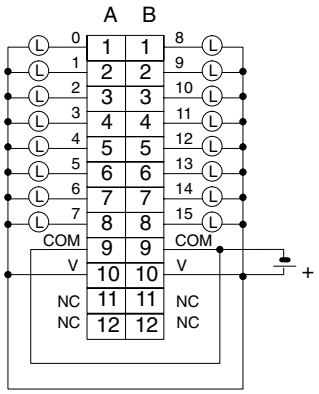
Dimensions	E-shape

TTL Output Units

	C500-OD501CN
Max. switching Capacity	5 VDC ±10% 35 mA/point
Leakage Current	0.1 mA max.
Residual Voltage	0.4 V max.
ON Response Time	0.2 ms max.
OFF Response Time	0.3 ms max.
No. of Points	32 (8 points/common, 4 circuits)
Internal Current Consumption	250 mA 5 VDC max.
Fuse Capacity	Not provided
Power for External Supply	32 mA 5 VDC ±10% min.
Weight	450 grams max.
Circuit Configuration	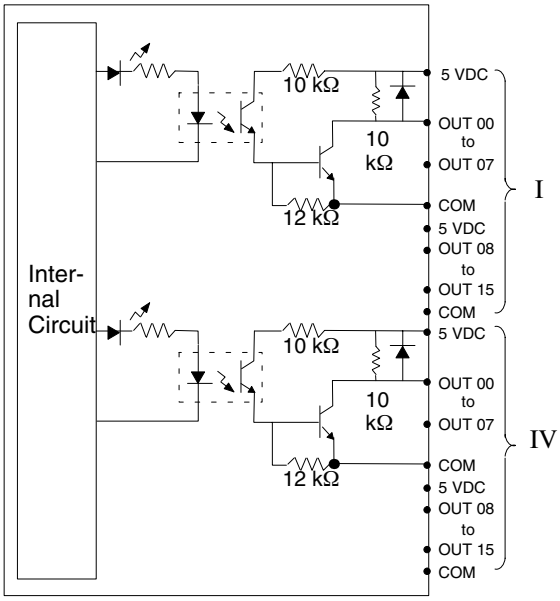
Terminal Connections	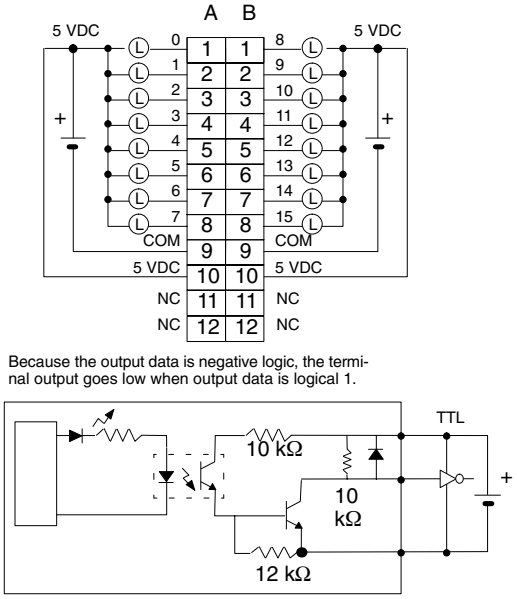
Dimensions	E-shape

DC Input/Transistor Output Unit

3G2A5-MD211CN			
Output (word n)		Input (word n+1)	
Max. switching Capacity	12 to 24 VDC $^{+10\%}/_{-15\%}$ 0.3 A (2.4 A/common, 4.8 A/unit)	Input Voltage	12 to 24 VDC $^{+10\%}/_{-15\%}$
Leakage Current	0.1 mA max.	Input Impedance	2.2 Ω
Residual Voltage	1.5 V max.	Input Current	10 mA typical (at 24 VDC)
Fuse Capacity	1 per circuit, 2 total (not user replaceable)	ON Voltage	10.2 VDC min.
Power for External Supply	80 mA 12 to 24 VDC ±10% max.	OFF Voltage	3.0 VDC max.
ON Response Time	0.2 ms max.	ON Response Time	15 ms max.
OFF Response Time	0.3 ms max.	OFF Response Time	15 ms max.
No. of Points	16 (8 points/common, 2 circuits)	No. of Points	16 (8 points/common, 2 circuits)
Internal Current Consumption	260 mA 5 VDC max.		
Weight	520 grams max.		
Circuit Configuration	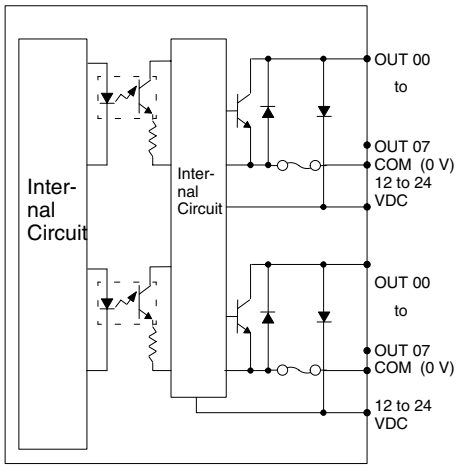	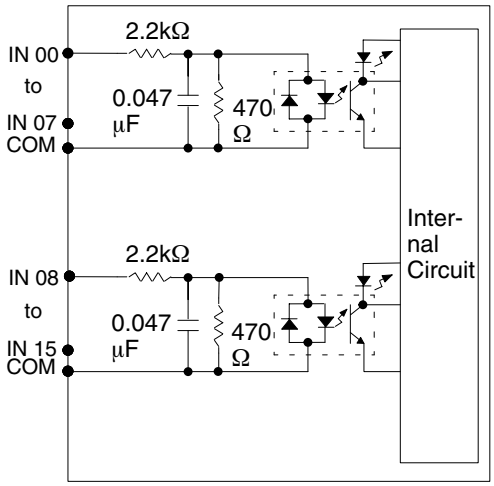	
Terminal Connections	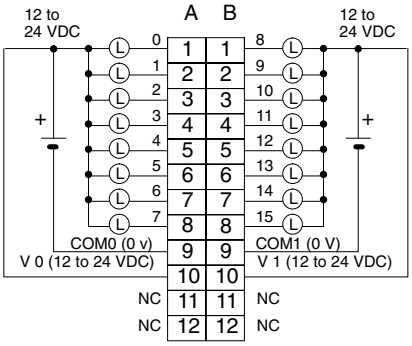 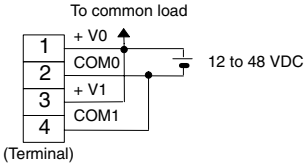	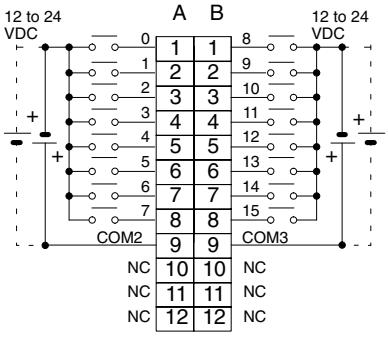 **Note** The maximum switching capacity for solderless connectors is 1 A/common.	
Dimensions	E-shape		

Dummy I/O Unit

	3G2A5-DUM01
Selection Function	Unit designation: input/output Point designation: 16/32/64 points
Internal Current Consumption	35 mA 5 VDC max.
Power for External Supply	30 mA 24 VDC ±10% min.
Weight	450 grams max.
Terminal Connections	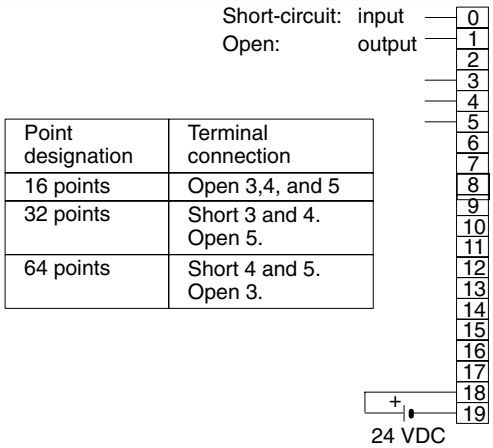 Point designation / Terminal connection 16 points: Open 3,4, and 5 32 points: Short 3 and 4. Open 5. 64 points: Short 4 and 5. Open 3.
Dimensions	A-shape

Note Power is supplied to the Dummy I/O Unit from the 24 VDC output terminal of the Power Supply, which is mounted on the same Rack as the Dummy I/O Unit. Be sure to supply power to the Dummy I/O Unit before supplying power to the CPU. If power is supplied to the Dummy I/O Unit after power is supplied to the CPU, the Dummy I/O Unit is assumed to have only 16 I/O points, and may result in an I/O Verification Error or an I/O Setting Error.

Dimensions

All dimensions are in millimeters unless stated otherwise.

C1000H CPU Rack

3G2A5-BC081/BC082

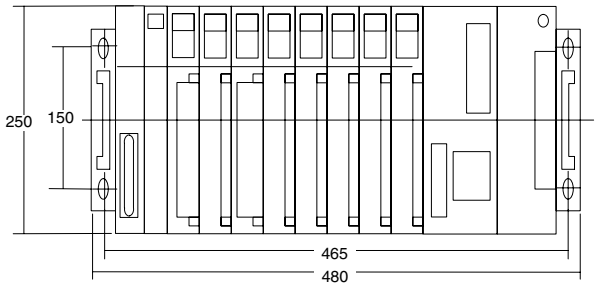

3G2A5-BC051/BC052

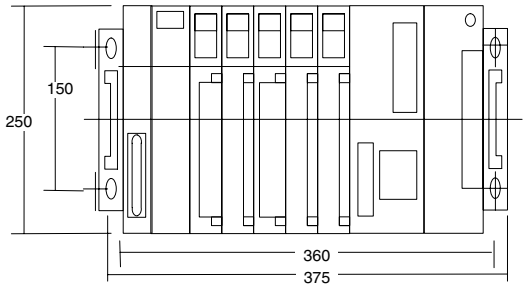

C500-BC031

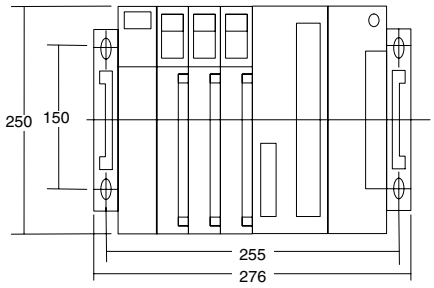

C500-BC061

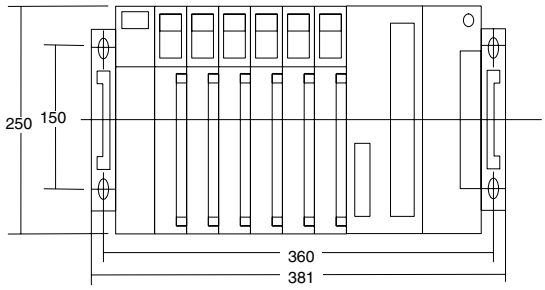

C500-BC091

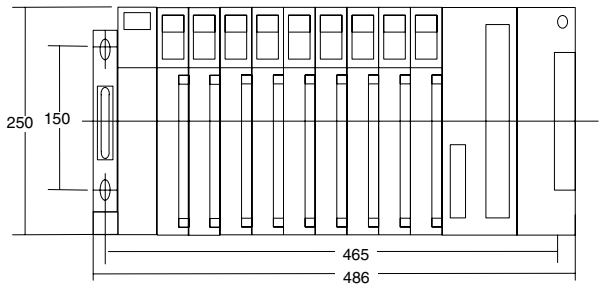

C2000H Simplex CPU Rack

3G2C5-BC061

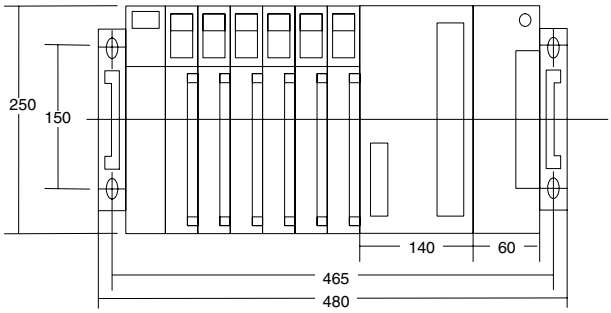

C2000H Duplex CPU Rack

3G2C5-BC001

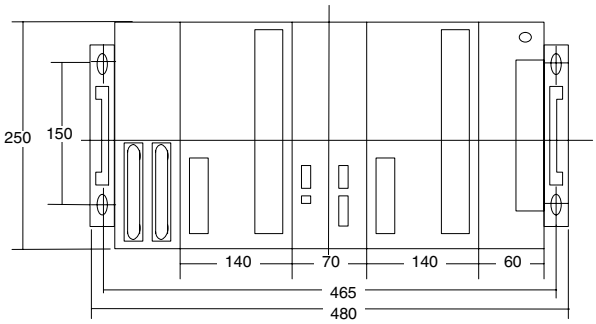

C2000H Duplex I/O Rack

3G2C5-BI082

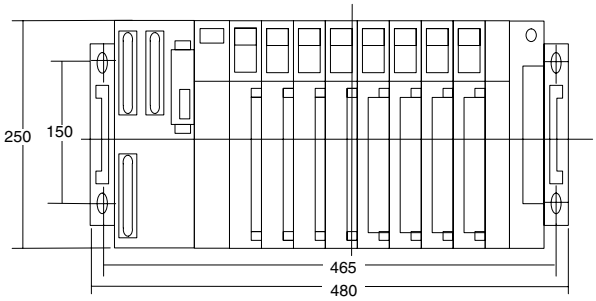

Expansion I/O Rack

3G2A5-BI081/3G2C5-BI083

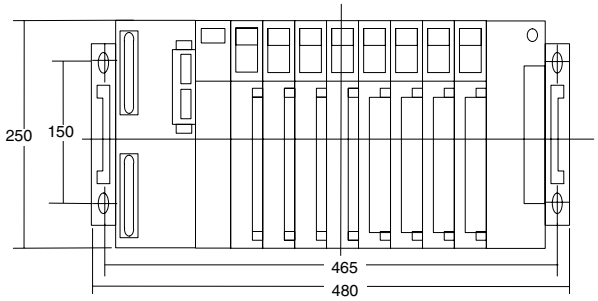

3G2A5-BI051

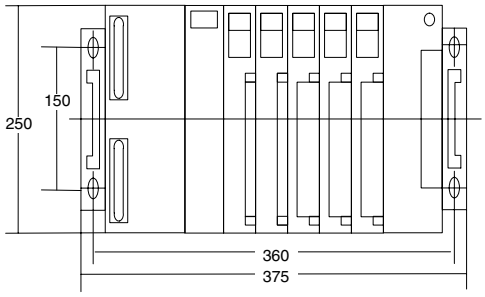

A-shape I/O Unit

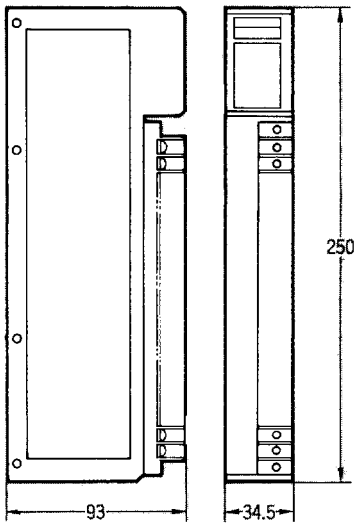

B-shape I/O Unit

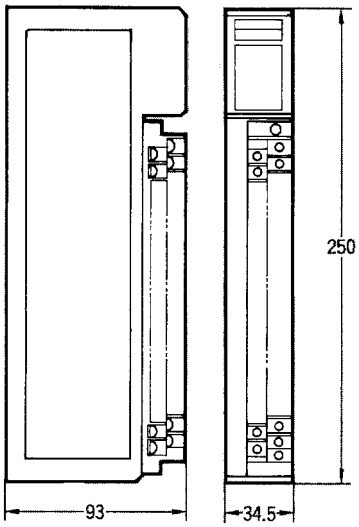

C-shape I/O Unit

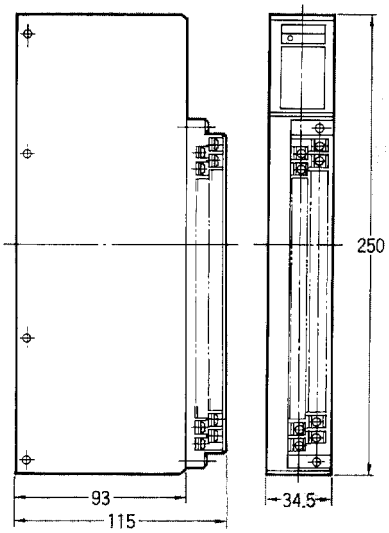

D-shape I/O Unit

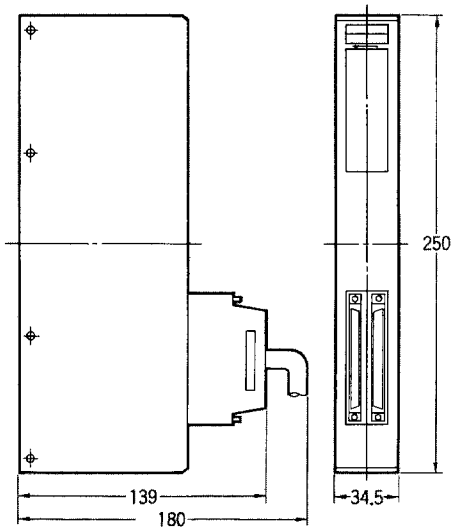

E-shape I/O Unit

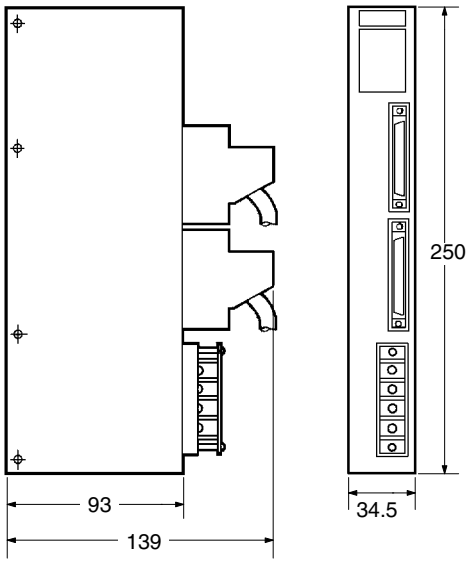

Memory Pack
C2000-M□□□1-V□

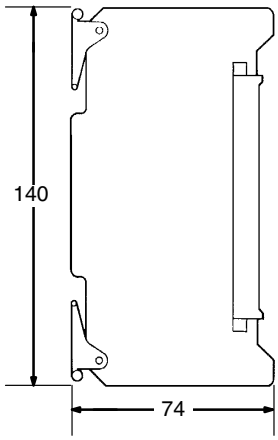

I/O Remove Unit Connecting Cables

The dimensions shown below are for the I/O Remove Unit Connecting Cables.

Model	Cable Length (cm)
3G2C5-CN313	30
3G2C5-CN513	50
3G2C5-CN813	80
3G2C5-CN123	105
3G2C5-CN223	200

I/O Connecting Cables

Use either a vertical or horizontal I/O Connecting Cable to connect the CPU Rack to an Expansion I/O Backplane or to connect an Expansion I/O Backplane to additional Expansion I/O Backplane. If you are using the C2000H Duplex System, use two I/O Connecting Cables to connect the CPU Rack to the I/O Rack.

Fasten the connectors with the locks provided on the connectors to secure the connection between the cable connector and the connector on the Backplane. If the connectors are not properly connected during CPU operation, errors such as I/O BUS error or I/O SETTING error will occur.

The length of the connecting cable depends on the distance between the two Racks to be connected. The length of the cable should be approximately 20 cm longer than the distance between the two Racks.

Connector Type	Cable Length (L)	Distance between Rack (max.) (X)
Vertical	30 cm	10 cm
	50 cm	30 cm
	80 cm	60 cm
	1 m	80 cm
	2 m	180 cm

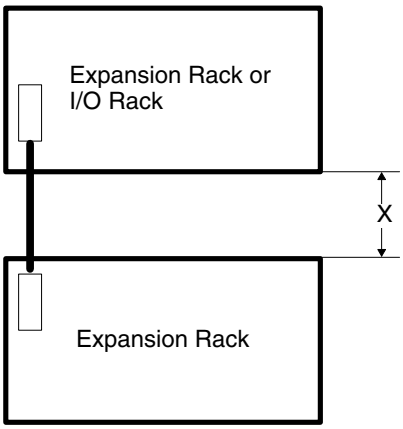

Vertical I/O Connecting Cable

The figures below show the dimensions of the cable and the height of the Vertical connector when the cable is connected to the Backplane.

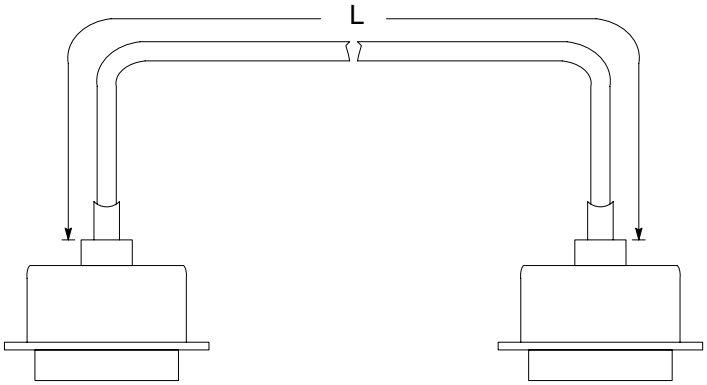

Model	Cable Length (L)
3G2A5-CN312N	30 cm
3G2A5-CN512N	50 cm
3G2A5-CN812N	80 cm
3G2A5-CN122N	1 m
3G2A5-CN222N	2 m

The length of an individual connecting cable can not be extended more than 2 m.

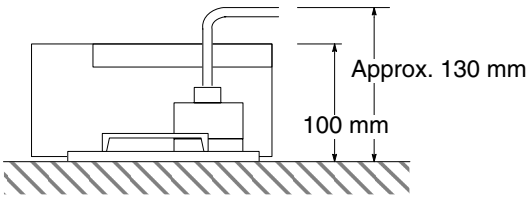

Appendix C
Standard Models

CPU Backplane

Name	Remarks			Model
Backplane	C1000H	9 I/O slots (see note)	6 Link slots	C500-BC091
		8 I/O slots	3 Link slots	3G2A5-BC081
			5 Link slots	3G2A5-BC082
		6 I/O slots	5 Link slots	C500-BC061
		5 I/O slots	3 Link slots	3G2A5-BC051
			5 Link slots	3G2A5-BC052
		3 I/O slots	3 Link slots	C500-BC031
	C2000H Simplex	6 I/O slots		3G2C5-BC061
	C2000H Duplex			3G2C5-BC001
CPU	C1000H			C1000H-CPU01-EV1
	C2000H			C2000H-CPU01-EV1
RAM Unit	8K words			C2000-MR831-V2
	16K words			C2000-MR141-V2
	24K words			C2000-MR241-V2
ROM Unit	32K words			C2000-MP341-V1
EPROM Chip	27128 150 ns, Write voltage 12.5 V			ROM-ID-B
	27256 150 ns, Write voltage 12.5 V			ROM-JD-B
	27512 150 ns, Write voltage 12.5 V			ROM-KD-B
Duplex Unit	For C2000H duplex system			3G2C5-DPL01-E
CPU Power Supply	100 to 120/200 to 240 VAC (selectable)	Output: 7 A 5 VDC		3G2A5-PS221-E
		Output: 12 A 5 VDC		3G2A5-PS223-E
	24 VDC	Output: 7 A max. 5 VDC		3G2A5-PS211-E
		Output: 9 A max. 5 VDC		C500-PS213-E
I/O Control Unit	Required to connect Expansion I/O Racks			3G2A5-II101
File Memory Unit	RAM, 1K blocks			C1000H-FMR11
	RAM, 2K blocks			C1000H-FMR21

Note *The rightmost slot is only for Link Units.

I/O Backplane (for C2000H Duplex System)

Name	Remarks		Model
I/O Backplane	---		3G2C5-BI082
I/O Backplane Power Supply	100 to 120/200 to 240 VAC (selectable)	Output: 7 A 5 VDC	3G2A5-PS222-E
	24 VDC	Output: 7 A 5 VDC	3G2A5-PS212-E
I/O Control Unit	---		3G2A5-II101
File Memory Unit	RAM type, 1K blocks		C1000H-FMR11
	RAM type, 2K blocks		C1000H-FMR21

Expansion I/O Backplane

Name	Remarks		Model
Expansion I/O Backplane	For C2000H, 8 slots, w/I/O on-line exchange function		3G2C5-BI083
	8 slots		3G2A5-BI081
	5 slots		3G2A5-BI051
Power Supply	100 to 120/200 to 240 VAC (selectable)	Output: 7 A 5 VDC	3G2A5-PS222-E
	24 VDC	Output: 7 A 5 VDC	3G2A5-PS212-E
I/O Interface Unit	---		3G2A5-II002
I/O Connecting Cable	Vertical type	30 cm	C500-CN312N
		50 cm	C500-CN512N
		80 cm	C500-CN812N
		1 m	C500-CN122N
		2 m	C500-CN222N

For I/O Unit On-line Exchange (C2000H)

Name	Remarks	Model
I/O Remove Auxiliary Unit	For CPU Rack in Simplex System and I/O Rack in Duplex System	3G2C5-IOD01
	For Expansion I/O Rack	3G2C5-IOD02
Connecting Cable	35 cm	C2000-CN313
	55 cm	C2000-CN513
	105 cm	C2000-CN123
	205 cm	C2000-CN223

I/O Units

Name		Remarks			Model
Input Unit	DC	16 mA 5 to 12 VDC, 8 points/common, 2 circuits		16 pts	3G2A5-ID112
		10 mA 12 to 24 VDC, 8 points/common, 2 circuits		16 pts	3G2A5-ID213
		10 mA 12 to 24 VDC, 8 points/ common, 4 circuits	ON response time: 15 ms max.	32 pts	3G2A5-ID215
			ON response time: 1.5 ms	32 pts	3G2A5-ID218
		10 mA 12 to 24 VDC, 8 points/common, 4 circuits		32 pts	3G2A5-ID218CN
		7 mA 12 VDC, static, 8 points/common, 8 circuits		64 pts	3G2A5-ID114
		10 mA 12 to 24 VDC, dynamic		64 pts	3G2A5-ID212
		7 mA 24 VDC, static, 8 points/common, 8 circuits		64 pts	3G2A5-ID219
	Interrupt Input Unit	13 mA 12 to 24 VDC (sep. commons)		8 pts	3G2A5-ID216
	AC	10 mA 100 to 120 VAC, 8 points/common, 2 circuits		16 pts	3G2A5-IA121
		10 mA 200 to 240 VAC, 8 points/common, 2 circuits		16 pts	3G2A5-IA222
		10 mA 100 to 120 VAC, 8 points/common, 4 circuits		32 pts	3G2A5-IA122
		10 mA 200 to 240 VAC, 8 points/common, 4 circuits		32 pts	3G2A5-IA223
	AC/DC	10 mA 12 to 24 VAC/DC, 8 points/common, 2 circuits		16 pts	3G2A5-IM211
		10 mA 12 to 24 VAC/DC, 8 points/common, 4 circuits		32 pts	3G2A5-IM212
	TTL	3.5 mA 5 VDC, 8 points/common, 4 circuits		32 pts	3G2A5-ID501CN
Output Unit	Contact	2 A 250 VAC/24 VDC, 8 points/common, 2 circuits		16 pts	3G2A5-OC221
		2 A 250 VAC/24 VDC (sep. commons)		16 pts	3G2A5-OC223
		2 A 250 VAC/24 VDC, 8 points/common, 4 circuits		32 pts	3G2A5-OC224-E
	Transistor	1 A 12 to 24 VDC, 8 points/common, 2 circuits		16 pts	3G2A5-OD217
		1 A 12 to 48 VDC, 16 points/common, 1 circuit		16 pts	3G2A5-OD411
		50 mA 24 VDC (sep. commons)		16 pts	3G2A5-OD215
		0.3 A 12 to 24 VDC, 16 points/common, 2 circuits		32 pts	C500-OD218
		2.1 A 12 to 24 VDC, 8 points/common, 2 circuits		16 pts	C500-OD219
		0.3 A 12 to 48 VDC, 16 points/common, 2 circuits		32 pts	3G2A5-OD414
		0.3 A 12 to 48 VDC, 32 points/common, 1 circuit		32 pts	3G2A5-OD412
		0.3 A 12 to 24 VDC, PNP output, 16 points/common, 2 circuits		32 pts	3G2A5-OD212
		0.3 A 12 to 48 VDC I/O relay terminal can be connected. 16 points/common, 2 circuits		32 pts	3G2A5-OD415CN
		0.1 A 24 VDC, dynamic		64 pts	3G2A5-OD211
		0.1 A 24 VDC, static, 8 points/common, 8 circuits		64 pts	3G2A5-OD213
	Triac	1 A 132 VAC max., 8 points/common, 2 circuits		16 pts	3G2A5-OA121
		1 A 250 VAC max., 8 points/common, 2 circuits		16 pts	3G2A5-OA222
		1 A 250 VAC max., 8 points/common, 3 circuits		24 pts	3G2A5-OA223
		1 A 250 VAC max., 8 points/common, 4 circuits		32 pts	C500-OA225
		1.2 A 250 VAC max., 8 points/common, 2 circuits		16 pts	C500-OA226
	TTL	3.5 mA 5 VDC, 8 points/common, 4 circuits		32 pts	C500-OD501CN
DC Input/Transistor Output Unit		12 to 24 VDC	Input: 10 mA	16 pts	3G2A5-MD211CN
			Output: 0.3 A	each	
Dummy I/O Unit		No. of I/O points is selectable		---	3G2A5-DUM01

Name	Remarks			Model
A/D Conversion Input	4 to 20 mA, 1 to 5 V		2 pts	3G2A5-AD001
	0 to 10 V		2 pts	3G2A5-AD002
	0 to 5 V		2 pts	3G2A5-AD003
	–10 to 10 V		2 pts	3G2A5-AD004
	–5 to 5 V		2 pts	3G2A5-AD005
	4 to 20 mA, 1 to 5 V		4 pts	3G2A5-AD006
	0 to 10 V		4 pts	3G2A5-AD007
	0 to 20 mA, 0 to 10 V		8 pts	C500-AD101
	0 to 5 V, 0 to 10 V, –5 to 5 V, –10 to 10 V, 0 to 20 mA, –20 to 20 mA		16 pts	C500-AD501
D/A Conversion Output	4 to 20 mA, 1 to 5 V		2 pts	3G2A5-DA001
	0 to 10 V		2 pts	3G2A5-DA002
	0 to 5 V		2 pts	3G2A5-DA003
	–10 to 10 V		2 pts	3G2A5-DA004
	–5 to 5 V		2 pts	3G2A5-DA005
	4 to 20 mA, 1 to 5 V, 0 to 10 V		4 pts	C500-DA101
	–10 to 10 V		4 pts	C500-AD103
High-speed Counter	6 BCD digits, 50 K cps 1 Set Value		1 pt	3G2A5-CT001
	6 BCD digits, 50 K cps 8 Set Value		1 pt	3G2A5-CT012
	4 BCD/BIN digits, 50 K cps		2 pts	C500-CT021
	4 BIN digits, 20 K cps 1 Set Value		4 pts	C500-CT041
Magnetic Card Reader	---			3G2A5-MGC01
Connecting Cable	---			3G2A9-CN521
Card Reader	---			3S4YR-MAW2C-04
Card	---			3G2A9-MCD01
PID	---			3G2A5-PID01-E
Position Control	1-axis, for stepping/servo motor			3G2A5-NC103-E
	1-axis, for servo motor			3G2A5-NC111-EV1
	2-axis, for servo motor			C500-NC222-E
	Encoder Adapter			3G2A5-AE001
	Teaching Box	---		3G2A5-TU001-E
				3G2A5-TU002-E
	Connecting Cable for TU002	For NC222-E	2 m	C200H-CN222
			4 m	C200H-CN422
		For NC103-E/111-EV1/121	4 m	C500-CN422
ASCII Unit	RAM + EEPROM			C500-ASC04
Ladder Program I/O	---			C500-LDP01-V1
Cam Positioner	---			C500-CP131
ID Sensor	---			C500-IDS01-V2
	For long distance (3G2A5-ID02-E is required)			C500-IDS02-V1
	ID Adapter			C500-IDA02
	R/W Head			V600-H06
	Data Carrier			V600-D2KR01

Link Units and Remote I/O Units

Name		Remarks		Model
Host Link	Rack-mounting	APF/PCF		3G2A5-LK101-PEV1
		PCF		3G2A5-LK101-EV1
		RS-232C/RS-422		3G2A5-LK201-EV1
		APF/PCF		C500-LK103-P
		PCF		C500-LK103
		RS-232C/RS-422		C500-LK203
	CPU-mounting	APF/PCF		3G2A6-LK101-PEV1
		PCF		3G2A6-LK101-EV1
		RS-232C		3G2A6-LK201-EV1
		RS-422		3G2A6-LK202-EV1
PC Link		Links up to 32 PCs		C500-LK009-V1
SYSMAC Link		Use optical fiber cable		C1000H-SLK11
		Only for C1000H and C2000H Simplex		C1000H-SLK21-V1
Optical Remote I/O Master		APF/PCF		3G2A5-RM001-PEV1
		PCF		3G2A5-RM001-EV1
Optical Remote I/O Slave		APF/PCF	w/1 optical connector	3G2A5-RT001-PEV1
			w/2 optical connectors	3G2A5-RT002-PEV1
		PCF	w/1 optical connector	3G2A5-RT001-EV1
			w/2 optical connectors	3G2A5-RT002-EV1
Optical I/O Link		APF/PCF		3G2A5-LK010-PE
		PCF		3G2A5-LK010-E
Wired Remote I/O Master		---		C500-RM201
Wired Remote I/O Slave		---		C500-RT201
Remote Terminal		Input	Specify 12 VDC or 24 VDC	G71-IC16
		Output		G71-OD16
Input Block	AC Input	Specify 100 VAC or 200 VAC		G7TC-IA16
	DC Input	Specify 12 VDC or 24 VDC		G7TC-ID16
Output Block	Output	Specify 12 VDC or 24 VDC		G7TC-OC16

Link Units and Remote I/O Units (Continued)

Name	Remarks				Model
Optical Transmitting I/O	DC Input	No-voltage	8 pts	APF/PCF	3G5A2-ID001-PE
	AC/DC Input	12 to 24 VAC/DC	8 pts	APF/PCF	3G5A2-IM211-PE
		100 VAC		PCF	3G5A2-IM211-E
	AC Input	100 VAC	8 pts	APF/PCF	3G5A2-IA121-PE
		100 VAC		PCF	3G5A2-IA121-E
	Contact output	2 A 250 VAC/24 VDC	8 pts	APF/PCF	3G5A2-OC221-PE
		100/200 VAC		PCF	3G5A2-OC221-E
	Transistor	0.3 A 12 to 48 VDC	8 pts	APF/PCF	3G5A2-OD411-PE

SYSBUS

Name	Remarks	Model
Link Adapter	RS-422, 3 pcs	3G2A9-AL001
	Optical (APF/PCF), 3pcs	3G2A9-AL002-PE
	Optical (PCF), 3pcs	3G2A9-AL002-E
	Optical (APF/PCF), RS-422, RS-232C, 1 pc each	3G2A9-AL004-PE
	Optical (PCF), RS-422, RS-232C, 1 pc each	3G2A9-AL004-E
	Optical (APF/PCF), optical (AGF), 1 pc each	3G2A9-AL005-PE
	Optical (PCF), optical (AGF), 1 pc each	3G2A9-AL005-E
	Optical (APF/PCF), 1 pc, RS-485 1 pc for Wired Remote I/O system only	B500-AL007-P

All Plastic Optical Fiber Cable (APF)

Name	Remarks	Model
Plastic Optical Fiber Cable	Cable only, 5 to 100 m in multiples of 5 meters or multiples of 200 or 500m	3G5A2-PF002
Optical Connector A	2 pcs (brown), for plastic optical fiber 10 m long max.	3G5A2-CO001
Optical Connector B	2 pcs (black) for plastic optical fiber 8 to 20 m long	3G5A2-CO002
Plastic Optical Fiber Cable	1 m, w/optical connector A provided at both ends	3G5A2-PF101

Plastic-Clad Optical Fiber Cable (PCF)

Name	Remarks		Model
Optical Fiber Cable (indoor)	0.1 m, w/connector	Ambient temperature: –10°C to 70°C	3G5A2-OF011
	1 m, w/connector		3G5A2-OF101
	2 m, w/connector		3G5A2-OF201
	3 m, w/connector		3G5A2-OF301
	5 m, w/connector		3G5A2-OF501
	10 m, w/connector		3G5A2-OF111
	20 m, w/connector		3G5A2-OF211
	30 m, w/connector		3G5A2-OF311
	40 m, w/connector		3G5A2-OF411
	50 m, w/connector		3G5A2-OF511
Optical Fiber Cable (indoor/outdoor)	1 to 500 m (Order in Units of 1 m)	Ambient temperature: –10°C to 70°C	3G5A2-OF002
	501 to 800 m (Order in Units of 1 m)	Ambient temperature: 0°C to 55°C (Must not be subjected to direct sunlight)	

H-PCF Optical Fiber Cords and Cables with Connectors

The following diagram illustrates the model number for cables with connectors. tension members and power lines are provided in the cable. Half-lock connectors use the S3200-COCF2511 and are compatible with C200H SYSMAC LINK or SYSMAC NET Link Unit connectors. Full-lock connectors use the S3200-COCF2011 and are compatible with CV-series SYSMAC LINK or SYSMAC NET and C1000H SYSMAC LINK Link Unit connectors. Full-lock connectors cannot be used with C200H connectors.

The above connectors cannot be used with C500 SYSMAC NET Link Unit connectors, cable relays, or NSB. Refer to the *SYSMAC NET Link System Manual* for appropriate connectors for these applications.

S3200-CN□□□-□□-□□

Cable Length		Connector Type	
201	2 m	20-20	Full-lock connecter on each end
501	5 m	20-25	One full-lock and one half-lock connector
102	10 m	25-25	Full lock connector on each end
152	15 m		
202	20 m		
Blank	Over 20 m*		

*Specify lengths over 20 m separately when ordering.

Optical Connectors

Name	Model
SYSMAC NET: CV500-SNT31 SYSMAC LINK: CV500-SLK11, C1000H-SLK11 SYSMAC BUS/2: CV500-RM211/RT211	S3200-COCF2011
SYSMAC NET: C200H-SNT31 SYSMAC LINK: C200H-SLK11	S3200-COCF2511
SYSMAC NET: C500-SNT31-V4 S3200-LSU03-01E/NSB11-E S3200-NSUA1-00E/NSUG4-00E FIT10-IF401	S3200-COCH62M
SYSMAC BUS: 3G2A5-RM001-(P)EV1 3G2A5-RT001/RT002-(P)EV1 3G2A9-AL□□-(P)E	S3200-COCH82
SYSMAC NET Relay (M) Connector	S3200-COCF62M
SYSMAC NET Relay (F) Connector	S3200-COCF62F

Cable Assembly Tool and Cutter

Name	Model
Cable Assembly Tool	S3200-CAK1062

Optical Power Tester

Name	Model
SYSMAC NET: CV500-SNT31	S3200-CAT2000
SYSMAC LINK: CV500-SLK11 SYSMAC BUS/2: CV500-RM211/RT211	S3200-CAT2700
SYSMAC BUS: 3G2A5-RM001-(P)EV1 3G2A5-RT001/RT002-(P)EV1	S3200-CAT2820
SYSMAC NET: S3200-LSU03-01E FIT10-IF401	S3200-CAT3200

Optical Power Tester Head Unit

Name	Model
SYSMAC NET: CV500-SNT31	S3200-CAT2002
SYSMAC LINK: CV500-SLK11 SYSMAC BUS/2: CV500-RM211/RT211	S3200-CAT2702
SYSMAC BUS: 3G2A5-RM001-(P)EV1 3G2A5-RT001/RT002-(P)EV1	S3200-CAT2822
SYSMAC NET: S3200-LSU03-01E FIT10-IF401	S3200-CAT3202

Peripheral Devices

Name	Remarks		Model
Programming Console	Vertical, w/backlight		3G2A5-PRO13-E
	Horizontal, w/backlight		3G2A6-PRO15-E
Programming Console Connecting Cable	For connecting Programming Console, GPC, or FIT. (Only use CN221 [2 m] for Programming Console.)	2 m	3G2A2-CN221
		5 m	C500-CN523
		10 m	C500-CN131
		20 m	C500-CN231
		30 m	C500-CN331
		40 m	C500-CN431
		50 m	C500-CN531
Programming Console Adapter	For extending Programming Console. Connecting cable is separate.		3G2A5-AP001
Programming Console Base			3G2A5-BP001
Data Access Console	---		C200H-DAC01
Handheld Programming Console	---		C200H-PR027-E
Programming Console Adapter	Required for each Handheld Programming Console	---	C500-AP003
Connecting Cable		2 m	C200H-CN222
		4 m	C200H-CN422
PROM Writer	Write voltage 12.5/21 V applicable		3G2A5-PRW06
Memory Pack (for Printer Interface)	---		3G2C5-MP102-EV3
Peripheral Interface Unit	Connecting cable is separate.		C200H-IP006
GPC Memory Pack	w/comments for C20, P-type, C120, C500		C500-MP303-EV2
	w/comments for K-type, C200H, C1000H, C2000H		3G2C5-MP304-EV3
CRT Interface Unit	For connecting GPC to CRT		3G2A5-GD101-E
Cassette Recorder Connecting Cable	1 m		SCYPOR-PLG01
SYSMAC Support Software	3.5”, 2HD for IBM PC/AT compatible		C500-ZL3AT1-E

Optional Products

Name	Remarks	Model
Battery	---	3G2A9-BAT08
Relay	24 VDC	G6B-1174P-FD-US-M
I/O Terminal Cover	For 38-pin block, special type	3G2A5-COV11
	For 38-pin block, standard	C500-COV12
	For 20-pin block, standard	C500-COV13
Connector Cover	For I/O connector	3G2A5-COV01
	For Link connector	3G2A5-COV02
	For I/O Control Unit / I/O Interface Unit connector	3G2A5-COV03
Space Unit	For I/O Control Unit	3G2A5-SP001
	For I/O Unit	3G2A5-SP002

Glossary

Backplane A base to which Units are mounted to form a Rack. Backplanes provide a series of connectors for these Units along with wiring to connect them to the CPU and Power Supply. Backplanes also provide connectors used to connect them to other Backplanes. In some Systems, different Backplanes are used for different Racks; in other Systems, Racks differ only by the Units mounted to them.

back-up A copy of existing data which is valuable if data is accidentally erased.

bit The smallest piece of information that can be represented on a computer. A bit has the value of either zero or one, corresponding to the electrical signals ON and OFF. A bit is one binary digit.

central processing unit A device that is capable of storing a program and data, and executing the set of instructions contained in the program. In a PC System, the central processing unit executes the program, processes I/O signals, communicates with external devices, etc.

communication cable Cable used to transfer data between components of a control system and conforming to the RS-232C or RS-422 standards.

Control System All of the hardware and software components used to control other devices. A Control System includes the PC System, the PC programs, and all I/O devices that are used to control or obtain feedback from the controlled system.

CPU An acronym for central processing unit.

CPU Backplane A Backplane used to create a CPU Rack.

CPU Rack Part of a Rack PC, the CPU Rack contains the CPU, a Power Supply, and other Units.

data area An area in the PC's memory that is designed to hold a specific type of data, e.g., the LR area is designed to hold common data in a PC Link System.

data link Allows for the connection of up to 32 PCs in a Net Link System where each is contributing information to a common memory area. Data links may be established in the LR and/or DM memory areas.

distributed control An automation concept in which control of each portion of an automated system is located near the devices actually being controlled, i.e., control is decentralized and "distributed" over the system. Distributed control is a concept basic to PC Systems.

Duplex System A C2000H PC that operates using two CPUs mounted to the CPU Rack. One CPU controls the system while the other CPU assumes a standby status.

Duplex Unit A Unit in the C2000H Duplex System that switches control between the two CPUs.

EEPROM [E(lectrically) E(rasable) P(rogrammable) R(ead) O(nly) M(emory)] A type of ROM in which stored data can be erased and reprogrammed. This is accomplished using a special control lead connected to the EEPROM chip and can be done without having to remove the EEPROM chip from the device in which it is mounted.

EPROM [E(rasable) P(rogrammable) R(ead) O(nly) M(emory)] A type of ROM in which stored data can be erased, by ultraviolet light or other means, and reprogrammed.

Expansion I/O Unit An I/O Unit for a Package-type PC that provides more I/O points to the PC.

factory computer A general-purpose computer, usually quite similar to a business computer, that is used in automated factory control.

High-speed Counter A Special I/O Unit. A High Speed Counter Unit counts independently of the PC's cycle time. This allows counting of very short, fast signals.

host computer A computer that is used to transfer data to or receive data from a PC in a Host Link system. The host computer is used for data management and overall system control. Host computers are generally small personal or business computers.

IBM PC/XT or AT, or compatibles A computer that has similar architecture to, and is logically compatible with an IBM PC/XT computer; and that can run software designed for that computer.

I/O Expansion Backplane A Backplane used to create an Expansion I/O Rack.

I/O Control Unit A Unit mounted to the CPU Rack in certain PCs to monitor and control I/O points on Expansion I/O Units.

I/O devices The devices which are connected to the terminals on I/O Units, Special I/O Units, or Intelligent I/O Units. I/O devices may be part of the Control System if they function to help control other devices, or they may be part of the controlled system if they interact directly with it.

I/O Expansion Rack Part of a Rack PC, an Expansion I/O Rack is connected to a CPU Rack to increase the number of slots available for mounting Units.

I/O Interface Unit A Unit mounted to an Expansion I/O Rack in certain PCs to interface the Expansion I/O Rack to the CPU Rack. An I/O Interface Unit is needed when the first Expansion I/O Rack is connected to the CPU Rack via a Connecting Cable. Each Expansion I/O Rack needs an I/O Interface Unit.

I/O point The place at which an input signal enters the PC System or an output signal leaves the PC System. In physical terms, an I/O point corresponds to terminals or connector pins on a Unit; in terms of programming, an I/O point corresponds to an I/O bit in the IR area.

I/O Remove Unit Unique to C2000H Systems, this Unit allows standard I/O Units to be mounted to or removed from the Backplane during PC operation.

I/O Unit The most basic type of Unit mounted to a Backplane. I/O Units include Input Units and Output Units, each of which is available in a range of specifications. I/O Units do not include Special I/O Units, Link Units, etc.

PC An acronym for Programmable Controller.

PC Link Unit A Unit used to connect two or more PCs together so that they can exchange data through their LR areas.

Position Control Unit A Special I/O Unit used to control the operation of positioning devices such as Servomotors.

Power Supply A Unit that mounts to a Backplane in a Rack PC. It provides power at the voltage required by the other Units on the Rack.

Programmable Controller A small, computer-like device that can control peripheral equipment, such as an electric door or quality control devices, based on programming and peripheral input devices. Any process that can be controlled using electrical signals can be controlled by a PC. PCs can be used independently or networked together into a system to control more complex operations.

PROM [P(rogrammable) R(ead) O(nly) M(emory)] A type of ROM into which the program or data may be written after manufacture, by a customer, but which is fixed from that time on.

PROM Writer A PROM Writer is a device used to write data to ROM, PROM, and EPROM storage chips.

Rack An assembly that forms a functional unit in a Rack PC System. A Rack consists of a Backplane and the Units mounted to it. These Units include the Power Supply, CPU, and I/O Units. Racks include CPU Racks, Expansion I/O Racks, and I/O Racks. The CPU Rack is the Rack with the CPU mounted to it. An Expansion I/O Rack is an additional Rack that holds extra I/O Units. An I/O Rack is used in the C2000H Duplex System, because there is no room for any I/O Units on the CPU Rack in this System.

Rack PC A PC that is composed of Units mounted to one or more Racks. This configuration is the most flexible, and most large PCs are Rack PCs. A Rack PC is the opposite of a Package-type PC, which has all of the basic I/O, storage, and control functions built into a single package.

RAM [R(andom) A(ccess) M(emory)] RAM will not retain data when power is disconnected. Therefore data should not be stored in RAM.

Remote I/O Unit A Unit that extends the distance an Expansion I/O Rack can be from the CPU.

ROM [R(ead) O(nly) M(emory)] A type of digital storage that cannot be written to. A ROM chip is manufactured with its program or data already stored in it, and it can never be changed. However, the program or data can be read as many times as desired.

Simplex System A C2000H PC that operates using one CPU mounted to the CPU Rack.

Space Unit A Unit mounted to the I/O Backplane of a C2000H Duplex System that simply fills the space between the I/O Expansion Power Supply and the rightmost Unit mounted on the Rack.

Special I/O Unit A dedicated Unit that is designed for a specific purpose. Special I/O Units include Position Control Units, High-Speed Counters, Analog I/O Units, etc.

system configuration The arrangement in which Units in a System are connected. This term refers to the conceptual arrangement and wiring together of all the devices needed to comprise the System. In OMRON terminology, system configuration is used to describe the arrangement and connection of the Units comprising a Control System that includes one or more PCs.

Unit In OMRON PC terminology, the word Unit is capitalized to indicate any product sold for a PC System. though most of the names of these products end with the word Unit, not all do, e.g., a Remote Terminal is referred to in a collective sense as a Unit. Context generally makes any limitations of this word clear.

Index

A

AC Input, 45

Active, CPU in Duplex System, 29

Ambient Temperature of PC, 48

applications, precautions, xiii

ASCII, 42

assembly tool, 115

B

Back-up Battery, 23, 34

Backplane
- Expansion I/O, 16
- I/O, 15
- I/O Expansion, 18
- mounting I/O Units, 20
- mounting Units to, 26, 36

Bits, 32

Bleeder Resistor, 60

Block, Terminal, 43

C

C1000H System, hardware description, 10

C2000H Duplex System, 35
- errors, 30
- general, 29
- hardware description, 11
- initial settings, 29
- operating mode, 29
- peripheral devices, 29

C2000H Simplex System, 34
- general, 32
- hardware description, 10

Cable
- power, 50
- twisted pair, 51

Clearance, Between PC Racks, 48

Conditions, Installation, 47

Conduit, 51

Connections
- I/O Units, 43
- PC, 39

control components, 2

Cooling, PC, 48

CPU, 10, 12, 26
- active in Duplex System, 29
- and Memory Packs, 23, 32
- and peripheral devices, 29
- and RAM Packs, 23
- and ROM Packs, 24
- and Simplex System, 32
- Backplane, 10
- connector, 12
- core of PC, 26
- indicators, 30
- initial settings, 29
- operating mode, 29
- Power Supplies, 13
- Power Supply, 13
- Rack, 10
  - C2000H Duplex System, 11, 18
  - C2000H Simplex System, 10
- standby in Duplex System, 29
- using two in a Duplex System, 29

CPU Power Supplies
- 3G2A5-PS221-E, 13
- 3G2A5-PS211-E, 14
- 3G2A5-PS223-E, 14
- C500-PS213-E, 14

CPU Power Supply, output capacity, 40

CPU Rack, 28
- connecting to another Backplane, 28

Current
- input leakage, 60
- output leakage, 60
- output surge, 61

Current Consumption, 40

Cycle Time, 5

D

DC Input Units, 44

Duct, Wiring, 50

Duplex Unit, 29
- C2000H, 18

E

Electrical Noise, 62

Electrostatic Charge, 47

Emergency Stop, 59

Environment, Installation, 47

EPROM Chip, mounting to ROM Pack, 32

Error
Duplex System, 30
in active CPU, 29
Indicator
CPU, 18
Duplex Bus, 18
Memory, 18
Verify, 18
indicator
CPU, 30
Duplex Bus, 30
Memory, 30
Verify, 30

Examples, wiring, 44

Expansion I/O Backplane, 16

Expansion I/O Power Supply, 34, 35

Expansion I/O Rack, 10, 16, 28, 29
and the C2000H Simplex System, 10
in the Duplex System, 35
in the Simplex System, 34

Expansion I/O Racks, mounting Units to, 37

F

Factory Computer, 2

Fan, cooling, 48

File Memory Unit, 19

Flag, in flowchart, 6

G

Grounding, 54

Grounding During PC Installation, 51

H

Hard-plastic-clad Quartz Fiber: H-PCF
cables, 114
cords, 114

High Power Equipment, and PC installation, 51

Humidity, 47

I

I/O, Remove Unit, 10

I/O Backplane, 15

I/O Connections, 43

I/O Control Unit, 18, 28

I/O Interface Unit, 18, 28

I/O Points, 27, 28, 32, 34, 35

I/O Power Supplies
3G2A5-PS212-E, 17
3G2A5-PS222-E, 17

I/O Power Supply, 16

I/O Remove Unit, 19

I/O Unit, 27
and the C2000H Duplex System, 11
and the C2000H Simplex System, 10
available current for, 13, 16
in a Duplex System, 30
in a Simplex System, 31
in flowchart, 6
Link, power consumption, 42
mounting, 36
mounting to Backplane, 27
power consumption, 40
Remote, 34
power consumption, 42
removing or mounting from Backplane, 20
shapes, 20
A-shape, 20
B-shape, 21
C-shape, 21
D-shape, 22
E-shape, 22
Special, power consumption, 42

Indicator, error, 18

Inductive Load Surge Suppressor, 62

Input Devices, 4

Input Leakage Current, 60

Installation
Environment, 47
Memory Pack to the CPU, 33

installation, precautions, xiii

Interlock Circuits, 60

L–M

Limit Switch, 4

Memory Pack, installation, 33

Memory Packs, 23, 32

Mounting
EPROM Chip to ROM Pack, 32
I/O Units, 36
PC, 48

Mounting Units, 26

N

Noise, electrical, 62

Noise, Preventing, 51

O

operating environment, precautions, xii

optical connectors, 115

Optical Power Tester, 115

Optical Power Tester Head Unit, 115

Output Devices, 4

Output Leakage Current, 60

Output Surge Current, 61

Output Units, 45

P

PC
- ambient temperature, 48
- and input devices, 4
- and output devices, 4
- C2000H Duplex System, 11
- C2000H Simplex System, 10
- clearance between racks, 48
- components, 25
- connections, 39
- cooling the, 48
- general, 1
- how it operates, 5
- I/O Unit mounting, 36
- in a Control System, 2
- installation environment, 48
- its role, 3
- mounting requirements, 48
- Simplex, 32

Peripheral Device Connector, 12

Peripheral Devices, 29

Photoelectric Switch, 4

Position Control System, 3

Position Control Unit, 36
- power consumption, 42

Power Cables, 50

Power Considerations, 53

Power Consumption, 40
- Units, 40, 41, 42

Power Failure, 54
- detection signal, 54

Power Reset, 54

Power Source, 53

Power Supplies, 40
- CPU, 13

Power Supply, 26
- Backplane mounting, 26
- CPU, 10, 11, 13
- Expansion I/O, 16
- I/O, 16
- in a CPU Rack, 28
- in block diagram, 5
- in System Configuration, 34, 35
- output capacity, 40

Power Supply Output, 60

precautions, xi
- applications, xiii
- general, xii
- operating environment, xii
- safety, xii

Preventing Noise, 51

process control computer, 2

Programmable Controller, flow chart, 6

Programmable Controller (also see PC), block diagram, 5

Programmable Controller (See also PC), 1

PROM, 32

PROM Writer, 24

Proximity Switch, 4

R

Rack, PC, 48

RAM, 32, 36
- Packs, 29, 33

RAM Pack, 23

Remote I/O
- Master, 20
- Slave, 20

Remote I/O Unit, 34
- in the Simplex System, 35
- Master, 36
- Slave, 36

Reset, Power, 54

Residual Voltage, 61

Resistor, Bleeder, 60

ROM Pack, 24

S

Safety Considerations, 59

safety precautions. *See* precautions

scanning cycle, 5

Screw, Terminal Block, 43

Sensors, in control system, 2

Servomotor, 4

Solenoid, 4

Special I/O Unit, number used, 36

Standby, CPU in Duplex System, 29

Static Electricity, preventing, 47

stepping motor, 4

Switch

Active, 30, 31
C2000H Duplex Unit, 18
CPU, ON/OFF, 31
in control system, 2
limit, 4
MODE SELECTOR, 31
photoelectric, 4
proximity, 4
pushbutton, 4
selector, CPU status, 29
SW1, 32
SYSTEM, 31
System, 30
Write-protect, 33
write-protect, 23

Switching, Duplex to Simplex, 31

System
C2000H Duplex, 29
C2000H Simplex, 32
Duplex, 29, 30, 35
Duplex to Simplex, switching, 31
Simplex, 32, 34
standby, 29
switch, 30

System Configuration, 34
C1000H, 34

T

Temperature, PC, 48

Terminal Block, 43

Transistor Output Residual Voltage, 61

Twisted Pair Cable, 51

U

Underground, Wires, 54

Unit
A/D Conversion, 20
C2000H Duplex, 18
D/A Conversion, 20
DC Input, 13
Duplex, 11, 29
File Memory, 19
High-speed Counter, 20
Host Link, 15
I/O, 10
general, 20
Special, 20
I/O Control, 18, 34, 35
I/O Interface, 16, 18, 28
I/O Remove, 10, 15, 19
Input, 20
Memory, 33
mounting, 26
Output, 45
PC Link, 15
power consumption of, 13, 16
RAM, 29
Remote I/O, 35
Remove, 32
Space Unit, 19

V–W

Voltage, residual, 61

Wire, shared, problems of, 54

Wiring
duct, 50
power source to PC, 54

Wiring Examples, 44

Word, 23

Write
data to Memory Pack, 23
data to RAM Pack, 23
disabled, 33
enabled, 33
program to CPU memory, 31
program to RAM Pack, 32
program to RAM Unit, 29
PROM, 32
protect switch, 23, 33

Writer, PROM, 24

Revision History

A manual revision code appears as a suffix to the catalog number on the front cover of the manual.

Cat. No. W139-E1-4

Revision code

The following table outlines the changes made to the manual during each revision. Page numbers refer to the previous version.

Revision code	Date	Revised content
1	June 1988	Original production
2	July 1990	Redundancies removed, and general cleaning of text and graphics.
2A	January 1992	ASCII Unit model number changed to C500-ASC04. **Page 15:** Addition to upper right-hand callout in top illustration. **Page 43:** Current consumptions changed for AC Input Units. **Page 77:** Input impedance changed. **Page 88:** Amp limit per common removed from maximum switch capacity for 3G2A5-OD412. **Page 97:** Internal current consumptions changed for both Units. **Page 98:** Internal current consumptions changed for both Units.
2B	October 1992	Model number 3G2A5-PS211-E has been changed to 3G2A5-PS213-E throughout the manual. **Page 11:** Changes were made to the table. **Page 105:** Changes were made to the 24 VDC CPU Power Supply row in the CPU Backplane table.
2C	May 1993	**Page 12:** Fuse amperage for C500-PS213-E changed from 3 A to 6.3 A. 3G2A5-PS211-E added. **Page 38 to 40:** Current consumption tables changed. **Page 55:** C500-PS213-E added. **Page 65:** PS211-E added. Output capacity for PS213-E changed to 9 A. Shock resistance specifications corrected. **Page 69:** Internal current consumption added for 3G2A5-ID218. Circuit configuration resistances changed. **Page 80:** 3G2A5-OA223 circuit configuration slightly altered. **Page 83:** C500-OD414 added. **Page 101:** Memory Pack dimensions added. **Pages 105 to 113:** Standard models lists extensively revised. Tables of models added.
2D	August 1994	Scan time has been replaced by cycle time throughout the manual. **Page 6:** Available manuals list added. **Page 18:** Fuse blowout alarm indicator models corrected for A-shape I/O Unit. **Page 20:** First sentence of *2-13 Memory Pack* corrected. **Pages 20, 102:** E-shape I/O Unit replaced with newer model. **Page 30:** EPROM 27250 corrected to EPROM 27256. **Page 40:** ID Sensor Unit models added. **Page 43:** AC switching diagram corrected and note added. **Page 70:** Internal current consumption added. Circuit configuration and terminal connections have been changed. **Page 71:** No. of points, circuit configuration, and terminal connections have been changed. **Page 82:** Circuit configuration changed for 3G2A5-OD411. **Pages 105 to 114:** Standard models lists updated.
2E	September 1995	**Page 7:** SSS Operation Manuals added to the list. **Page 32:** Last row of table corrected. **Page 42:** Special I/O Units table updated. **Page 45:** Diagram corrected. **Page 96:** Resistances corrected for the circuit configuration and terminal connections. **Pages 107 to 115:** Model lists updated.
2F	August 1996	**Page 94:** Circuit configuration changed for C500-OD219.
3	December 1999	**Page xi:** *Precautions* added. **Page 41 :** Model number C500-0D217 changed to 3G2A5-OD217. **Page 41 :** Model number C500-OD415CN changed to 3G2A5-OD415CN. **Page 41, 86 :** Information relating to the C500-OA226 Triac Output Unit added. **Page 43 :** Crimp terminal and tightening torque information corrected. **Page 55 to 57 :** Crimp terminal and terminal block information added or changed. **Page 73 :** Resistance information corrected for the circuit configuration of the 3G2A5-ID215. **Page 85, 86 :** Model number 3G2A5-OA225 changed to C500-OA225. **Page 87, 89, 92, 94, 97 :** Fuse capacity information and circuit configuration changed for the 3G2A5-OD412, 3G2A5-OD212, 3G2A5-OD213, C500-OD218 and 3G2A5-MD211CN. **Page 94 :** Model number 3G2A5-OD218 changed to C500-OD218. **Page 96 :** Model number 3G2A5-OD501CN changed to C500-OD501CN. Circuit configuration corrected. **Page 107 to 115 :** Standard model lists updated.
4	June 2000	**Page 88 :** Circuit configuration for 3G2A5-OD412 changed. **Page 93 :** Circuit configuration for 3G2A5-OD213 changed and a note added to the terminal connection diagram for 3G2A5-OD213. **Pages 100 and 107 :** Model numbers C500-BC082 and C500-BC052 changed to 3G2A5-BC082 and 3G2A5-BC052 respectively.

OMRON

OMRON ELECTRONICS LLC

1 Commerce Drive
Schaumburg, IL 60173
847.843.7900
For US technical support or
other inquiries: 800.556.6766

OMRON CANADA, INC.

885 Milner Avenue
Toronto, Ontario M1B 5V8
416.286.6465

OMRON ON-LINE

Global - http://www.omron.com
USA - http://www.omron.com/oei
Canada - http://www.omron.ca

UNITED STATES

To locate a Regional Sales Office, local Distributor or to obtain product information, call: 847.843.7900

CANADA REGIONAL SALES OFFICES

Ontario	Toronto	416.286.6465
	Kitchener	519.896.1144
	Kingston	613.376.3968
Quebec	Montreal	514.636.6676
British Columbia	Vancouver	604.522.8855
Alberta	Edmonton	403.440.0818
	Calgary	403.257.3095

BRAZIL SALES OFFICE

Sao Paulo 55.11.5564.6488

ARGENTINA SALES OFFICE

Cono Sur 54.114.787.1129

MEXICO SALES OFFICES

Florida 954.227.2121 **Ciudad Juarez** 656.623.7083
Mexico, D.F. 555.534.1195 **Monterrey, N.L.** 818.377.4281

W139-E1-04

©2006 OMRON ELECTRONICS LLC
Printed in the U.S.A.

Specifications subject to change without notice.

ООО «ЛайфЭлектроникс» “LifeElectronics” LLC

ИНН 7805602321 КПП 780501001 Р/С 40702810122510004610 ФАКБ "АБСОЛЮТ БАНК" (ЗАО) в г.Санкт-Петербурге К/С 30101810900000000703 БИК 044030703

Компания «Life Electronics» занимается поставками электронных компонентов импортного и отечественного производства от производителей и со складов крупных дистрибьюторов Европы, Америки и Азии.

С конца 2013 года компания активно расширяет линейку поставок компонентов по направлению коаксиальный кабель, кварцевые генераторы и конденсаторы (керамические, пленочные, электролитические), за счёт заключения дистрибьюторских договоров

Мы предлагаем:

- *Конкурентоспособные цены и скидки постоянным клиентам.*
- *Специальные условия для постоянных клиентов.*
- *Подбор аналогов.*
- *Поставку компонентов в любых объемах, удовлетворяющих вашим потребностям.*

- *Приемлемые сроки поставки, возможна ускоренная поставка.*
- *Доставку товара в любую точку России и стран СНГ.*
- *Комплексную поставку.*
- *Работу по проектам и поставку образцов.*
- *Формирование склада под заказчика.*

- *Сертификаты соответствия на поставляемую продукцию (по желанию клиента).*
- *Тестирование поставляемой продукции.*
- *Поставку компонентов, требующих военную и космическую приемку.*
- *Входной контроль качества.*
- *Наличие сертификата ISO.*

В составе нашей компании организован Конструкторский отдел, призванный помогать разработчикам, и инженерам.

Конструкторский отдел помогает осуществить:

- *Регистрацию проекта у производителя компонентов.*
- *Техническую поддержку проекта.*
- *Защиту от снятия компонента с производства.*
- *Оценку стоимости проекта по компонентам.*
- *Изготовление тестовой платы монтаж и пусконаладочные работы.*

Тел: +7 (812) 336 43 04 (многоканальный)
Email: org@lifeelectronics.ru

www.lifeelectronics.ru