MLX90290 Datasheet

High Speed Factory Trimmed Linear Hall IC

1. Features and Benefits

- Linear Hall Sensor
- Small Size
- High Sensitivity
- High Accuracy
- High Speed
- Fast Start-Up for power gating in Micro-power applications
- Factory Programmed Customization
  - Sensitivity
  - Magnet Thermal Drift Compensation
  - Supply Voltage
- Automotive AEC Q-100 Qualified

2. Application Examples

- Linear Position Sensor
- Rotary Position Sensor
- Current Sensing
- Motor Commutation/Resolving

3. Description

The Melexis MLX90290 is a Second Generation linear Hall-effect sensor designed in mixed signal CMOS technology.

The device integrates a voltage regulator, Hall sensor with advanced offset cancellation system, and an analog output driver, in a single package.

The Output voltage is proportional to the applied magnetic field and to the chip supply voltage (ratiometric). Multiple sensitivity codes & magnet compensation options exist.

The Output Offset Level (Quiescent Level) at zero magnetic field is 50% of the chip supply voltage.

The device is offered in a RoHS compliant Thin Small Outline Transistor (TSOT) for surface mount and UA (TO-92) for Pin Through Hole mount.

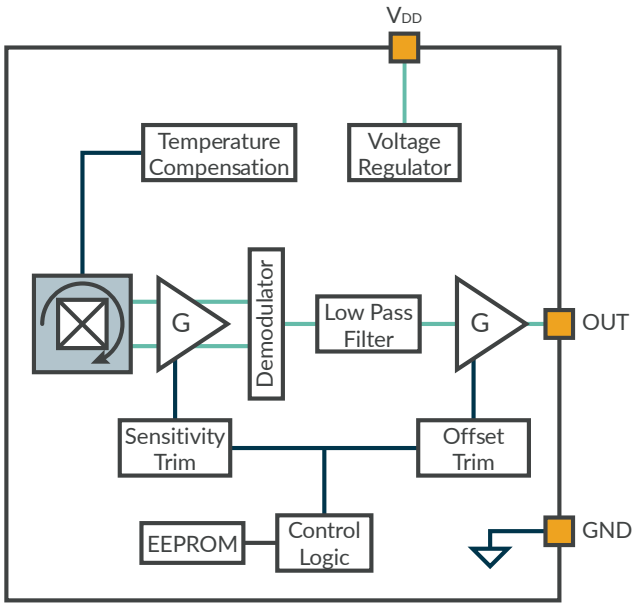

Figure 1 Functional Block Diagram MLX90290

Contents

1. Features and Benefits 1
2. Application Examples 1
3. Description 1
4. Ordering Information 3
5. Glossary of Terms 6
6. Pin Definitions and Descriptions 6
7. Absolute Maximum Ratings 7
8. General Electrical Specifications 8
9. Sensor Specific Specifications 9
10. Detailed General Description 11
    10.1. Characteristic Definitions 11
11. Application Information 12
    11.1. Typical Application Diagram 12
    11.2. Application Circuit for Harsh and Noisy Environment 13
12. Package Information –Example from MLX90290 14
    12.1. UA (TO92-3L) Package Information 14
    12.2. UA (TO92-3L) Hall Plate Location 14
        12.2.1. Trim and form with 2.54mm distance between leads; only available on tape 15
    12.3. SE (TSOT-3L) Package Information 16
    12.4. SE (TSOT-3L) Hall Plate Location 16
13. Standard Information 16
14. ESD Precautions 17
15. Contact 17
16. Disclaimer 18

4. Ordering Information

Product Code	Temperature Code	Package Code	Option Code	Packing Form Code
MLX90290	L	UA	AAA-XYZ	BU
MLX90290	L	SE	AAA-XYZ	RE

Legend:

Temperature Code: L: (-40°C to 150°C)

Package Code:
UA: TO-92-3L
SE: TSOT-3L

Option Code:

AAA-XYZ:
AAA = die version

X = V_{DDNOM} and trim & form options for UA package

- See Below Table: Package Options

Y= S_{REL}

- 0: 18.8 mV/mT @ 5V Or 12.408 mV/mT @ 3.3V
- 1: 25 mV/mT @ 5V Or 16.5 mV/mT @ 3.3V
- 2: 31.25 mV/mT @ 5V Or 20.625 mV/mT @ 3.3V
- 3: 50 mV/mT @ 5V Or 33 mV/mT @ 3.3V
- 4: 100 mV/mT @ 5V Or 66 mV/mT @ 3.3V
- 5: 39 mV/mT @ 5V Or N/A @ 3.3V

Z = TCS

- 0: 0 ppm/°C
- 1: 500 ppm/°C
- 2: 2000 ppm/°C
- 3: 650 ppm/°C

Important: S_{rel} is expressed as mV/mT for 5V. This sensitivity scales with supply voltage.
E.g. Option 1 with 3.3V VDD supply voltage becomes 16.5mV/mT = 3.3/5*25mV/mT.

	Package Options	
Supply Voltage	**SE** **UA** with straight leads	**UA** with 2.54mm pitch, see section "UA package, trim and form"
3.3 V ± 5 %	X=3	X=4
5.0 V ± 10 %	X=5	X=6

Packing Form:
RE = Reel for SE or UA
CR = Radial Tape for UA (Carton Tape on Reel)
CA = Radial Tape for UA (Carton Tape in Ammopack)
BU = Bulk for SE or UA

Ordering example: MLX90290-LUA-AAA-612-CR. This ordering code indicates a 5V supply part in TO92 (UA) component with leads separated to achieve a 2.54mm pitch delivered in Carton Tape on Reel. The sensitivity corresponds to 25mV/mT and a thermal coefficient of +2000 ppm/°C to compensate for the magnet thermal drift (assumed to be a ferrite magnet).

Ordering Code	Package	Supply Voltage	Absolute Sensitivity	TC	Lead Forming	Packing Form[1]
MLX90290LSE-AAA-300-RE	TSOT-3L	3.3V	12.408mV/mT[2]	0ppm/°C	N/A	Plastic Tape on Reel
MLX90290LSE-AAA-310-RE	TSOT-3L	3.3V	16.5mV/mT[2]	0ppm/°C	N/A	Plastic Tape on Reel
MLX90290LSE-AAA-320-RE	TSOT-3L	3.3V	20.625mV/mT[2]	0ppm/°C	N/A	Plastic Tape on Reel
MLX90290LSE-AAA-321-RE	TSOT-3L	3.3V	20.625mV/mT[2]	500ppm/°C	N/A	Plastic Tape on Reel
MLX90290LSE-AAA-332-RE	TSOT-3L	3.3V	33mV/mT[2]	2000ppm/°C	N/A	Plastic Tape on Reel
MLX90290LSE-AAA-510-RE	TSOT-3L	5V	25mV/mT	0ppm/°C	N/A	Plastic Tape on Reel
MLX90290LSE-AAA-511-RE	TSOT-3L	5V	25mV/mT	500ppm/°C	N/A	Plastic Tape on Reel
MLX90290LSE-AAA-520-RE	TSOT-3L	5V	31.25mV/mT	0ppm/°C	N/A	Plastic Tape on Reel
MLX90290LSE-AAA-521-RE	TSOT-3L	5V	31.25mV/mT	500ppm/°C	N/A	Plastic Tape on Reel
MLX90290LSE-AAA-553-RE	TSOT-3L	5V	39mV/mT	650ppm/°C	N/A	Plastic Tape on Reel
MLX90290LSE-AAA-530-RE	TSOT-3L	5V	50mV/mT	0ppm/°C	N/A	Plastic Tape on Reel
MLX90290LSE-AAA-531-RE	TSOT-3L	5V	50mV/mT	500ppm/°C	N/A	Plastic Tape on Reel
MLX90290LSE-AAA-532-RE	TSOT-3L	5V	50mV/mT	2000ppm/°C	N/A	Plastic Tape on Reel
MLX90290LSE-AAA-540-RE	TSOT-3L	5V	100mV/mT	0ppm/°C	N/A	Plastic Tape on Reel
MLX90290LUA-AAA-500-BU	TO92-3L	5V	18.8mV/mT	0ppm/°C	Std 1.27mm	Bulk
MLX90290LUA-AAA-500-RE	TO92-3L	5V	18.8mV/mT	0ppm/°C	Std 1.27mm	Plastic Tape on Reel
MLX90290LUA-AAA-510-BU	TO92-3L	5V	25mV/mT	0ppm/°C	Std 1.27mm	Bulk
MLX90290LUA-AAA-510-RE	TO92-3L	5V	25mV/mT	0ppm/°C	Std 1.27mm	Plastic Tape on Reel
MLX90290LUA-AAA-511-BU	TO92-3L	5V	25mV/mT	500ppm/°C	Std 1.27mm	Bulk

Ordering Code	Package	Supply Voltage	Absolute Sensitivity	TC	Lead Forming	Packing Form(1)
MLX90290LUA-AAA-512-BU	TO92-3L	5V	25mV/mT	2000ppm/°C	Std 1.27mm	Bulk
MLX90290LUA-AAA-612-CR	TO92-3L	5V	25mV/mT	2000ppm/°C	2.54mm spread	Carton Tape on Reel
MLX90290LUA-AAA-520-BU	TO92-3L	5V	31.25mV/mT	0ppm/°C	Std 1.27mm	Bulk
MLX90290LUA-AAA-520-CR	TO92-3L	5V	31.25mV/mT	0ppm/°C	Std 1.27mm	Carton Tape on Reel
MLX90290LUA-AAA-620-CR	TO92-3L	5V	31.25mV/mT	0ppm/°C	2.54mm spread	Carton Tape on Reel
MLX90290LUA-AAA-521-BU	TO92-3L	5V	31.25mV/mT	500ppm/°C	Std 1.27mm	Bulk
MLX90290LUA-AAA-522-BU	TO92-3L	5V	31.25mV/mT	2000ppm/°C	Std 1.27mm	Bulk
MLX90290LUA-AAA-530-BU	TO92-3L	5V	50mV/mT	0ppm/°C	Std 1.27mm	Bulk
MLX90290LUA-AAA-531-BU	TO92-3L	5V	50mV/mT	500ppm/°C	Std 1.27mm	Bulk
MLX90290LUA-AAA-631-CA	TO92-3L	5V	50 mV/mT	500ppm/°C	2.54mm spread	Carton Tape in Ammopack
MLX90290LUA-AAA-631-CR	TO92-3L	5V	50 mV/mT	500ppm/°C	2.54mm spread	Carton Tape on Reel
MLX90290LUA-AAA-532-BU	TO92-3L	5V	50mV/mT	2000ppm/°C	Std 1.27mm	Bulk
MLX90290LUA-AAA-540-BU	TO92-3L	5V	100mV/mT	0ppm/°C	Std 1.27mm	Bulk
MLX90290LUA-AAA-541-BU	TO92-3L	5V	100mV/mT	500ppm/°C	Std 1.27mm	Bulk
MLX90290LUA-AAA-542-BU	TO92-3L	5V	100mV/mT	2000ppm/°C	Std 1.27mm	Bulk

Table 1 Available option codes in production

The above option codes are all released in production. An option code refers to the sensitivity and magnet compensation. In order to obtain a not listed option code in Table 1, please contact your local Sales Representative to explore the options of customization during Melexis factory trimming.

(1) Melexis can provide for a given option code a different packing forms, such as –RE for TSOT-3L surface mount package and –BU, –CR or –CA for TO92-3L through hole package. So, it is possible to obtain a different packing form for a product listed in Table 1.
(2) Sensitivity scaled for 3.3V supply.

5. Glossary of Terms

Name	Definition
Tesla [T]	Units of magnetic flux density: 1mT = 10 Gauss
ESD	Electro-Static Discharge
TSOT	Thin Small Outline Transistor package
PSRR	Power Supply Rejection Ratio
SMD	Surface Mount Devices
THD	Through Hole Device
RoHS	Restriction of Hazardous Substances

Table 2

6. Pin Definitions and Descriptions

SE Pin №	UA Pin №	Name	Type	Function
1	1	VDD	Supply	Supply Voltage
2	3	OUT	I/O	Analog Output
3	2	GND	Ground	Ground

UA package

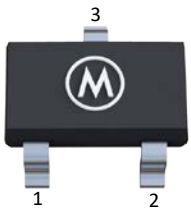

SE package

Table 3 Pin Definitions and Descriptions

7. Absolute Maximum Ratings

Operating Characteristics, V_{DD} = 3.15V to 5.5V, T_A = -40°C to 150°C, C1 ≥ 0.1µF (unless otherwise specified)

Parameter	Symbol	Value	Units
Supply Voltage	V_{DD}	-0.3 to 7	V
Supply Current[1]	I_{DD}	±20	mA
Output Voltage	V_{OUT}	-0.3 to V_{DD}+0.3	V
Output Current[1]	I_{OUT}	±20	mA
Operating Temperature Range	T_A	-40 to 150	°C
Maximum Junction Temperature	T_J	165	°C
Storage Temperature Range	T_S	-55 to 165	°C
ESD Sensitivity (Human Body Model)[2]	ESD_{HBM}	8	kV
ESD Sensitivity (Charged Device Model)[3]	ESD_{CDM}	500	V
Maximum Flux Density	B	> 1000	mT

Table 4 Absolute Maximum Ratings

Exceeding the absolute maximum ratings may cause permanent damage. Exposure to absolute maximum-rated conditions for extended periods may affect device reliability.

[1] Including the current flowing through the protection structure. Maximum power dissipation should be also considered
[2] *Human Body Model according AEC-Q100-002 standard*
[3] *Charged Device Model according AEC-Q100-011 standard*

8. General Electrical Specifications

Operating Characteristics, V_{DD} = 3.15V to 5.5V, T_A = -40°C to 150°C, C1 ≥ 0.1µF (unless otherwise specified)

Parameter	Symbol	Test Conditions	Min	Typ[4]	Max	Units
Supply Voltage	V_{DD}	Operating	3.15	-	5.5	V
Supply Current	I_{DD}		3	5	8	mA
Reset Voltage	V_{POR}	OUT → High Impedance	-	2.7	2.95	V
Load Current Range	I_{OUT}		-1	-	1	mA
Load Resistance Range	R_L	Connected between OUT and GND	5	-	Infinite	kΩ
Load Capacitor Range[5]	C_L	Connected between OUT and GND	0	10	100 with R_S=50Ω	nF
Output Saturation Voltage	V_{OSHI}	I_{OUT}= -1mA, B=1.1*(V_{DD} - V_{OQ})/S	V_{DD} - 0.25	-	V_{DD}	V
	V_{OSHI}[5]	I_{OUT}= -0.1mA, B=1.1*(V_{DD} - V_{OQ})/S	V_{DD} - 0.1	-	V_{DD}	V
	V_{OSLO}	I_{OUT}=1mA, B=1.1*(-V_{OQ})/S	0	-	0.25	V
	V_{OSLO}[5]	I_{OUT}=0.1mA, B=1.1*(-V_{OQ})/S	0	-	0.1	V
Output Resistance	R_{OUT}	I_{OUT}= ±1mA	-	1.5	5	Ω
Power-On Time[6,7]	t_{ON}	V_{DD}=V_{DDNOM}[8], B=0.4/S_{REL}, dV_{DD}/dt>2V/us	-	40	70	µs
Chopping Frequency	F_{CHOP}		-	900	-	kHz
Sample / Update Period	T_{SAMPLE}	T_{SAMPLE}=1/F_{CHOP}	-	1.1	-	us
Power Supply Rejection Ratio[5]	PSRR	From 80kHz to 200kHz	20	-	-	dB
Package Thermal Resistance Junction to Ambient	R_{THJA}	TSOT-3L	-	230	-	°C/W
		3-SIP-UA / TO92-UA	-	180	-	°C/W

Table 5 : General Electrical Specification

[4] *Typical values are defined at TA = 25°C and VDD = VDDNOM*
[5] *Guaranteed by design and characterization*
[6] *The Power-On Time represents the time from reaching VDD = 3.15V to VOUT settled within ±5% from its final value*
[7] *Power-On Slew Rate is not critical for the proper device start-up*
[8] *VDDNOM = 5V or 3.3V - the value used at trimming*

9. Sensor Specific Specifications

Operating Characteristics, V_{DD} = 3.15V to 5.5V, T_A = -40°C to 150°C, C1 ≥ 0.1µF (unless otherwise specified)

Parameter	Symbol	Test Conditions	Min	Typ[9]	Max	Units
Relative Sensitivity Accuracy	εS	T_A=25°C, V_{DD}=V_{DDNOM}[10]	-5	-	5	%
Sensitivity Ratiometry	ε^R S		-2.5	-	2.5	% / V
Linearity	Lin	V_{DD}=V_{DDNOM}[10]	-1.5	-	1.5	%
Symmetry	Sym	V_{DD}=V_{DDNOM}[10]	-1.5	-	1.5	%
Relative Output Offset Level	V_{OQREL}	B=0mT, T_A=25°C, V_{DD}=V_{DDNOM}[10]	0.49	0.5	0.51	-
Thermal Offset Drift	$\varepsilon^T V_{OQ}$[11]	B=0mT, V_{DD}=V_{DDNOM}[10] S in [mV/mT]	-(25mV+0.9mT*S)	0	+(25mV+0.9mT*S)	-
Output Offset Ratiometry	$\varepsilon^R V_{OQREL}$	B=0mT	-2.5	-	2.5	% / V
Signal Bandwidth	BW	At -3dB, B<0.4/S_{REL}, UA package SOT package	 15[12] 25[12]	 30[12] 50[12]	 -	kHz
Signal Phase Shift	PHI	Sine wave magnetic field at F = 1 kHz UA package SOT package	 -	 3.6[12] 2.4[12]	 5[12] 3.2[12]	Degree
Relative Sensitivity Range	S_{REL}	V_{DD}=V_{DDNOM}[10]	9.9 15	-	66 100	mV/mT@3.3V mV/mT @5V
Sensitivity Temperature Coefficient	TCS	V_{DD}=V_{DDNOM}[10]	0		2000	ppm/°C

Table 6 Magnetic specification

---

[9] Typical values are defined at TA = 25ºC and VDD = VDDNOM
*[10] VDDNOM = 5V or 3.3V - the value used at trimming. This sensitivity scales with supply voltage. E.g. Y=1 with 3.3V VDD supply voltage becomes 16.5mV/mT = 3.3/5*25mV/mT.*
[11] Guaranteed by design and characterization
[12] Signal Bandwidth & Signal Phase Shift mentioned here are defined for Z=1 & 2, resp. 500ppm/ºC & 2000ppm/ºC. The option code Z=0 has internal filtering disabled. Products for 0ppm/ºC are targeted for current measurement applications. Therefore, Bandwidth & Phase Shift are not specified. No internal filter enables a step response time in the order of us. To get an idea of the phase & amplitude behavior over frequency, use a bode diagram for a 1st order RC filter with the Frequencies specified under "Band width". Also note that Melexis can support you to get an application specific filter setting. Contact your sales contact in such case.

Parameter	Code	Symbol	Test Conditions	Min	Typ	Max	Units
Sensitivity Temperature Coefficient	Z = 0	TCS_{-40} [11]	T_A= -40°C, V_{DD}=V_{DDNOM}[10]		0		ppm/°C
		TCS_{150} [13]	T_A=150°C, V_{DD}=V_{DDNOM}[10]		0		ppm/°C
	Z = 1	TCS_{-40} [11]	T_A= -40°C, V_{DD}=V_{DDNOM}[10]	0	650	1300	ppm/°C
		TCS_{150} [13]	T_A=150°C, V_{DD}=V_{DDNOM}[10]	0	500	1000	ppm/°C
	Z = 2	TCS_{-40} [11]	T_A= -40°C, V_{DD}=V_{DDNOM}[10]	1100	2000	2900	ppm/°C
		TCS_{150} [13]	T_A=150°C, V_{DD}=V_{DDNOM}[10]	1100	2000	2900	ppm/°C
	Z = 3	TCS_{-40} [11]	T_A= -40°C, V_{DD}=V_{DDNOM}[10]	0	650	1300	ppm/°C
		TCS_{150} [13]	T_A=150°C, V_{DD}=V_{DDNOM}[10]	0	500	1000	ppm/°C
Relative Sensitivity Range (factory trimmed)	Y = 0	S_{REL}	V_{DD}=V_{DDNOM}[10]		12.4 18.8		mV/mT@3.3V mV/mT@5V
	Y = 1	S_{REL}	V_{DD}=V_{DDNOM}[10]		16.5 25		mV/mT@3.3V mV/mT@5V
	Y = 2	S_{REL}	V_{DD}=V_{DDNOM}[10]		20.625 31.25		mV/mT@3.3V mV/mT@5V
	Y = 3	S_{REL}	V_{DD}=V_{DDNOM}[10]		33 50		mV/mT@3.3V mV/mT@5V
	Y = 4	S_{REL}	V_{DD}=V_{DDNOM}[10]		66 100		mV/mT@3.3V mV/mT@5V
	Y =5	S_{REL}	V_{DD}=V_{DDNOM}[10]		N/A 39		mV/mT@3.3V mV/mT@5V

Table 7 Available Settings

[13] *Guaranteed by correlation with wafer test and characterization*

10. Detailed General Description

10.1. Characteristic Definitions

The Sensor DC Output Voltage is defined by:

$V_{OUT} = V_{DD} . (V_{OQREL} + S_{REL} . B)$, $[V]$, where:

$V_{OQREL} = \frac{V_{OQ}}{V_{DD}}$, $\left[\frac{V}{V}\right]$ is the measured relative quiescent output voltage, its nominal value is 0.5;

$V_{OQ} = V_{OUT}$, $[V]$ is the measured quiescent output voltage at $B = 0$;

$S_{REL} = \frac{S}{V_{DD}} = \frac{\Delta V_{OUT}}{\Delta B} . \frac{1}{V_{DD}}$, $\left[\frac{1}{T}\right]$ is the relative magnetic sensitivity;

$S = \frac{\Delta V_{OUT}}{\Delta B} = S_{REL} . V_{DD}$, $\left[\frac{V}{T}\right]$ is the magnetic sensitivity at given supply voltage V_{DD}.

Magnetic Sensitivity Temperature Coefficient TCS is defined by:

$$TCS = \frac{S_{REL}(T_A) - S_{REL}(25°C)}{S_{REL}(25°C).(T_A - 25°C)} . 10^6, \left[\frac{ppm}{°C}\right].$$

Magnetic Sensitivity Ratiometry is defined by:

$$\varepsilon^R S = \frac{S_{REL}(V_{DD}) - S_{REL}(V_{DDNOM})}{S_{REL}(V_{DDNOM}).(V_{DD} - V_{DDNOM})} . 100\%, \left[\frac{\%}{V}\right].$$

Linearity for both positive and negative magnetic fields is defined by:

$Lin = \frac{S_{REL}(B_2) - S_{REL}(B_1)}{S_{REL}(B_1)} . 100\%$, $[\%]$, where $B_1 = \pm\frac{0.2}{S_{REL}}$, $B_2 = \pm\frac{0.4}{S_{REL}}$ and

$$S_{REL}(B_X) = \frac{V_{OUT}(B_X) - V_{OQ}}{B_X . V_{DD}}.$$

Symmetry for positive and negative magnetic fields is defined by:

$Sym = \frac{S_{REL}(B_2) - S_{REL}(B_1)}{\frac{1}{2}(S_{REL}(B_1) + S_{REL}(B_2))} . 100\%$, $[\%]$, where $B_1 = \frac{0.4}{S_{REL}}$, $B_2 = -\frac{0.4}{S_{REL}}$ and

$$S_{REL}(B_X) = \frac{V_{OUT}(B_X) - V_{OQ}}{B_X . V_{DD}}.$$

Output Offset Temperature Drift is defined by:

$$\varepsilon^{T}V_{OQ} = V_{OQ}(T_A) - V_{OQ}(25°C)\,,\ [mV].$$

Output Offset Ratiometry is calculated by:

$$\varepsilon^{R}V_{OQREL} = \frac{V_{OQREL}(V_{DD}) - V_{OQREL}(V_{DDNOM})}{V_{OQREL}(V_{DDNOM}).(V_{DD} - V_{DDNOM})}\ .\ 100\%\,,\ \left[\frac{\%}{V}\right].$$

11. Application Information

11.1. Typical Application Diagram

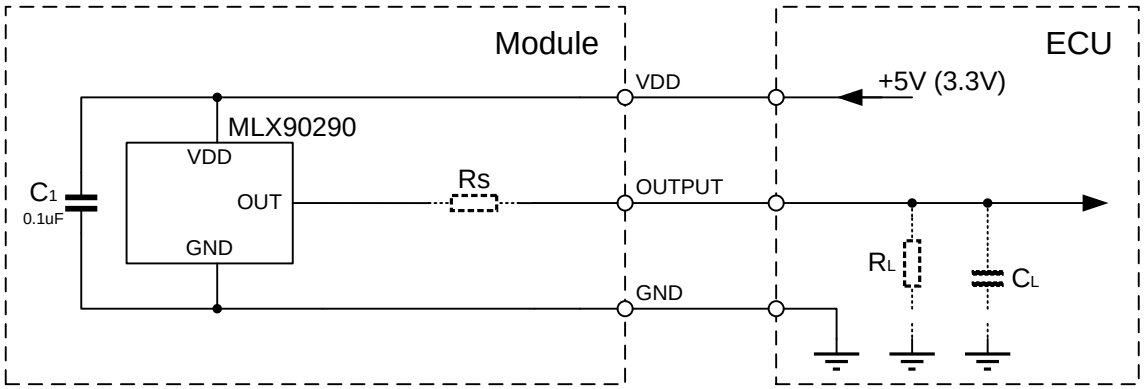

Notes:
For proper operation a 100nF or bigger bypass capacitor C1 should be placed as close as possible to the VDD and GND pins of MLX90290.
For embedded applications the components R_S, R_L and C_L are not required.

11.2. Application Circuit for Harsh and Noisy Environment

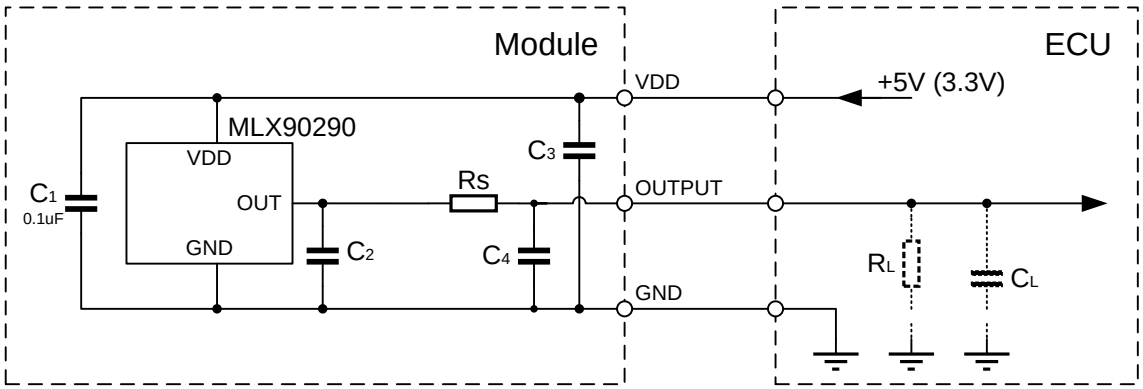

Notes:
For proper operation a 100nF or bigger bypass capacitor C1 should be placed as close as possible to the VDD and GND pins of MLX90290. For harsh and noisy environment, a bypass capacitor C2 of 1nF to 10nF can be placed on the output. For improved EMC performance an additional resistance, Rs and capacitors, C3 and C4 placed close to the connector of the module are recommended. Recommended values for: Rs ≥ 50E, 1nF ≥ C3 ≤ 4.7nF, 1nF ≥ C4 ≤ 10nF.
For embedded applications the components R_L and C_L are not required.

12. Package Information –Example from MLX90290

12.1. UA (TO92-3L) Package Information

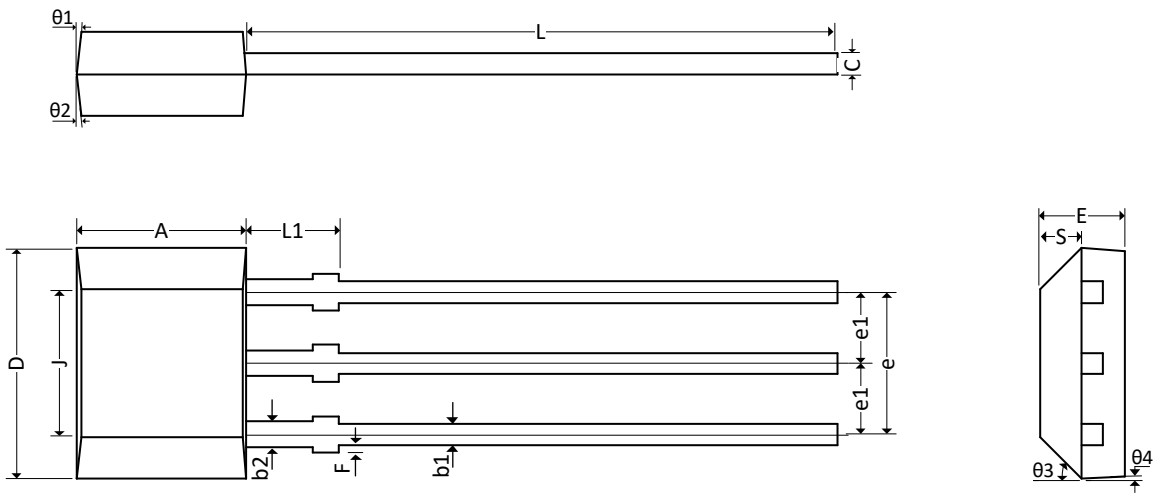

	A	D	E	F	J	L	L1	S	b1	b2	c	e	e1
min	2.80	3.90	1.40	0.00	2.51	14.0	0.90	0.63	0.35	0.43	0.35	2.51	1.24
max	3.20	4.30	1.60	0.15	2.72	15.0	1.10	0.84	0.44	0.52	0.44	2.57	1.30

	θ1	θ2	θ3	θ4
min	7° REF	7° REF	45° REF	7° REF
max				

Notes:

1. All dimensions are in millimeters.
2. Mold flashes and protrusion are not included.
3. Gate burrs shall not exceed 0.127mm on the top side.

12.2. UA (TO92-3L) Hall Plate Location

Hall plate location

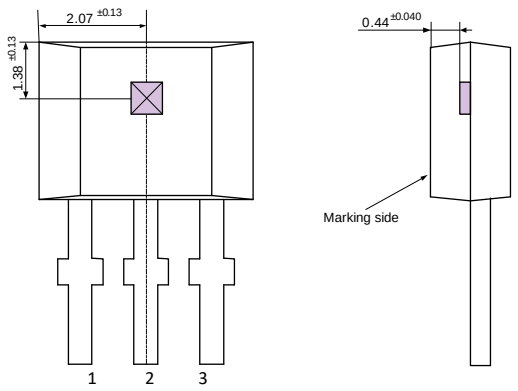

Notes:

1. All dimensions are in millimeters
2. Mold flashes and protrusion are not included

12.2.1. Trim and form with 2.54mm distance between leads; only available on tape

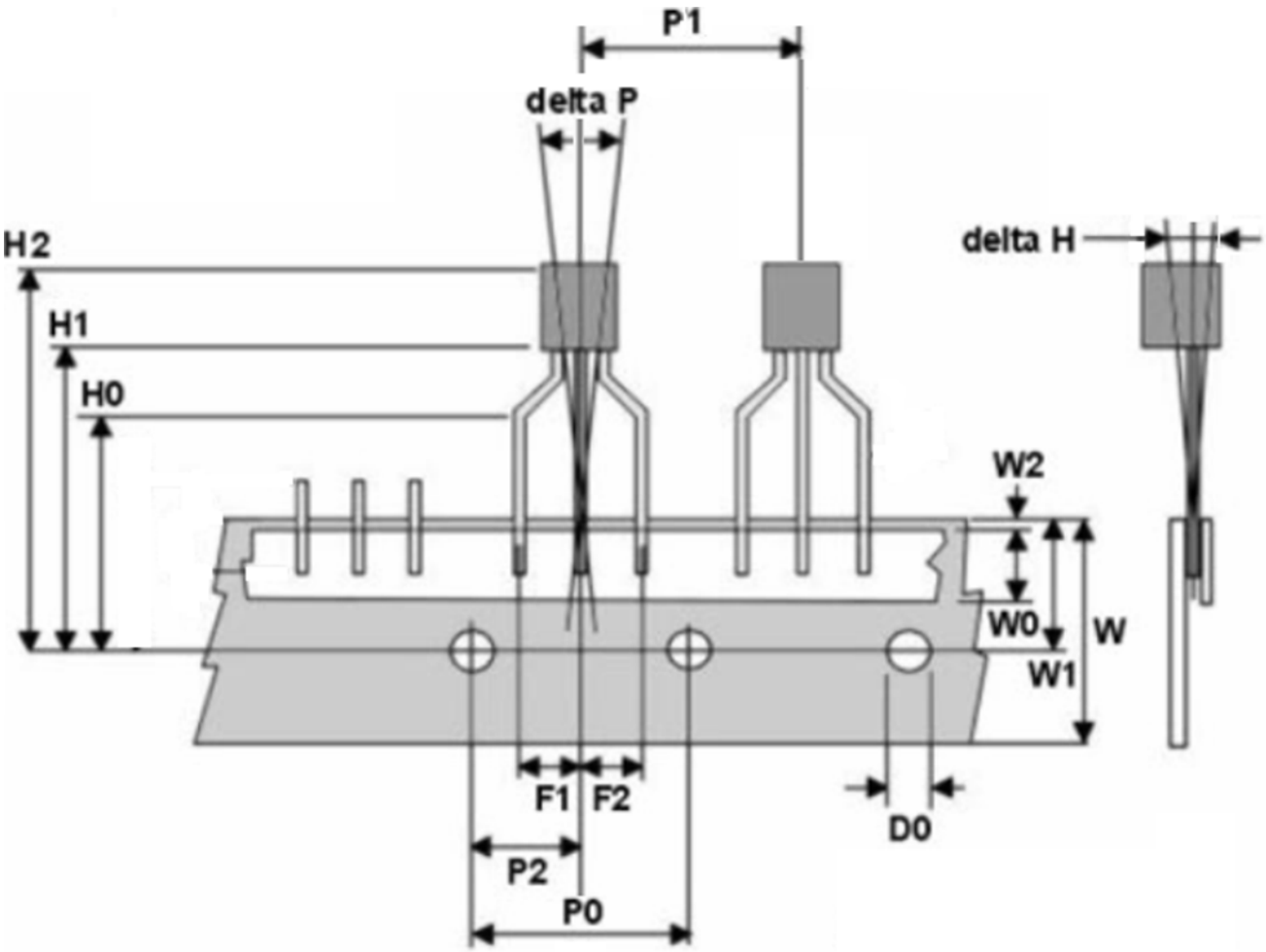

Parameter	Component Height	Component Position	Hole Diameter	Hole Position	Hole Pitch	Component Pitch	Right-Left Bending
	H1	P2	Do	W1	Po	P1	ΔP
Nominal (& Tolerance)	19mm (±0.5)	6.35mm (±0.4)	4mm (±0.2)	9mm (-0.5;+0.75)	12.7mm (±0.3)	12.7mm (±0.3)	±0.4mm

Parameter	Lead Spacing	Front-Rear Bending	Tape Width	Adhesive Tape Width	Adhesive to Carrier Tape Gap	Vertical Lead Length	Component Height Top
	F1 & F2	ΔH	W	Wo	W2	H0	H2
Nominal (&Tolerance)	2.54mm (±0.25mm)	±.0.3deg	18mm (±0.5)	6mm (±0.2)	0.5mm (-0.5; +0.3)	15.5mm (±0.5)	22.0mm (±0.8mm)

12.3. SE (TSOT-3L) Package Information

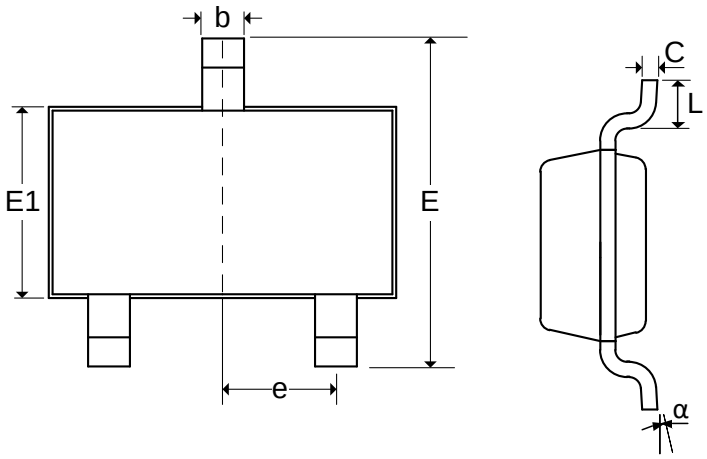

Notes:

1. All dimensions are in millimeters
2. Outermost plastic extreme width does not include mold flash or protrusions. Mold flash and protrusions shall not exceed 0.15mm per side.
3. Outermost plastic extreme length does not include mold flash or protrusions. Mold flash and protrusions shall not exceed 0.25mm per side.
4. The lead width dimension does not include dambar protrusion. Allowable dambar protrusion shall be 0.07mm total in excess of the lead width dimension at maximum material condition.
5. Dimension is the length of terminal for soldering to a substrate.
6. Formed lead shall be planar with respect to one another with 0.076mm at seating plane.

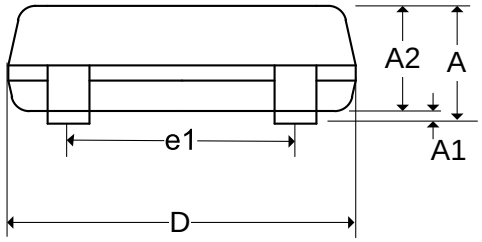

Marking:

Top side :

90XXX
XXX: Last three digits of the lot

Bottom side:

WWYY
WW: Calendar Week
YY: Calendar Year

	A	A1	A2	D	E	E1	L	b	c	e	e1	α
min	–	0.025	0.85	2.80	2.60	1.50	0.30	0.30	0.10	0.95	1.90	0°
max	1.00	0.10	0.90	3.00	3.00	1.70	0.50	0.45	0.20	BSC	BSC	8°

Notes:

1. Dimension “D” and “E1” do not include mold flash or protrusions. Mold flash or protrusion shall not exceed 0.15mm on “D” and 0.25mm on “E” per side.
2. Dimension “b” does not include dambar protrusion.

12.4. SE (TSOT-3L) Hall Plate Location

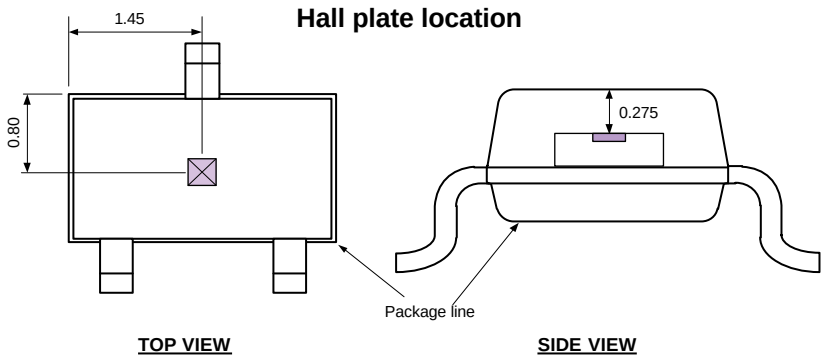

13. Standard Information

Our products are classified and qualified regarding soldering technology, solderability and moisture sensitivity level according to standards in place in Semiconductor industry.

For further details about test method references and for compliance verification of selected soldering method for product integration, Melexis recommends reviewing on our web site the General Guidelines soldering recommendation. For all soldering technologies deviating from the one mentioned in above document (regarding peak temperature, temperature gradient, temperature profile, etc.), additional classification and qualification tests have to be agreed upon with Melexis.

For package technology embedding trim and form post-delivery capability, Melexis recommends to consult the dedicated trim & form recommendation application note: lead trimming and forming recommendations

Melexis is contributing to global environmental conservation by promoting **lead free** solutions. For more information on qualifications of **RoHS** compliant products (RoHS = European directive on the Restriction Of the use of certain Hazardous Substances) please visit the quality page on our website: http://www.melexis.com/en/quality-environment

14. ESD Precautions

Electronic semiconductor products are sensitive to Electro Static Discharge (ESD).
Always observe Electro Static Discharge control procedures whenever handling semiconductor products.

15. Contact

For the latest version of this document, go to our website at www.melexis.com.

For additional information, please contact our Direct Sales team and get help for your specific needs:

Europe, Africa	Telephone: +32 13 67 04 95
	Email : sales_europe@melexis.com
Americas	Telephone: +1 603 223 2362
	Email : sales_usa@melexis.com
Asia	Email : sales_asia@melexis.com

16. Disclaimer

The information furnished by Melexis herein ("Information") is believed to be correct and accurate. Melexis disclaims (i) any and all liability in connection with or arising out of the furnishing, performance or use of the technical data or use of the product(s) as described herein ("Product") (ii) any and all liability, including without limitation, special, consequential or incidental damages, and (iii) any and all warranties, express, statutory, implied, or by description, including warranties of fitness for particular purpose, non-infringement and merchantability. No obligation or liability shall arise or flow out of Melexis' rendering of technical or other services.
The Information is provided "as is" and Melexis reserves the right to change the Information at any time and without notice. Therefore, before placing orders and/or prior to designing the Product into a system, users or any third party should obtain the latest version of the relevant information to verify that the information being relied upon is current.
Users or any third party must further determine the suitability of the Product for its application, including the level of reliability required and determine whether it is fit for a particular purpose.
The Information is proprietary and/or confidential information of Melexis and the use thereof or anything described by the Information does not grant, explicitly or implicitly, to any party any patent rights, licenses, or any other intellectual property rights.
This document as well as the Product(s) may be subject to export control regulations. Please be aware that export might require a prior authorization from competent authorities.
The Product(s) are intended for use in normal commercial applications. Unless otherwise agreed upon in writing, the Product(s) are not designed, authorized or warranted to be suitable in applications requiring extended temperature range and/or unusual environmental requirements. High reliability applications, such as medical life-support or life-sustaining equipment are specifically not recommended by Melexis.
The Product(s) may not be used for the following applications subject to export control regulations: the development, production, processing, operation, maintenance, storage, recognition or proliferation of 1) chemical, biological or nuclear weapons, or for the development, production, maintenance or storage of missiles for such weapons: 2) civil firearms, including spare parts or ammunition for such arms; 3) defense related products, or other material for military use or for law enforcement; 4) any applications that, alone or in combination with other goods, substances or organisms could cause serious harm to persons or goods and that can be used as a means of violence in an armed conflict or any similar violent situation.
The Products sold by Melexis are subject to the terms and conditions as specified in the Terms of Sale, which can be found at https://www.melexis.com/en/legal/terms-and-conditions.

This document supersedes and replaces all prior information regarding the Product(s) and/or previous versions of this document.

Melexis NV © - No part of this document may be reproduced without the prior written consent of Melexis. (2020)

ISO/TS 16949 and ISO14001 Certified

Revision History Table

Rev 001	6-Oct-2014	Document Creation
Rev 002	22-May-2019	Update to new Melexis branding template
Rev 003	15-Apr-2020	Updated UA package outline drawing to current format Added versions placed into production since latest update Updated block diagram to standard Melexis format and colors Added Automotive AEC Q-100 qualified note under "Features and Benefits"
	23-Apr-2020	Updated 3D package drawings in section 6

ООО «ЛайфЭлектроникс» “LifeElectronics” LLC

ИНН 7805602321 КПП 780501001 Р/С 40702810122510004610 ФАКБ "АБСОЛЮТ БАНК" (ЗАО) в г.Санкт-Петербурге К/С 30101810900000000703 БИК 044030703

Компания «Life Electronics» занимается поставками электронных компонентов импортного и отечественного производства от производителей и со складов крупных дистрибьюторов Европы, Америки и Азии.

С конца 2013 года компания активно расширяет линейку поставок компонентов по направлению коаксиальный кабель, кварцевые генераторы и конденсаторы (керамические, пленочные, электролитические), за счёт заключения дистрибьюторских договоров

Мы предлагаем:

- *Конкурентоспособные цены и скидки постоянным клиентам.*
- *Специальные условия для постоянных клиентов.*
- *Подбор аналогов.*
- *Поставку компонентов в любых объемах, удовлетворяющих вашим потребностям.*

- *Приемлемые сроки поставки, возможна ускоренная поставка.*
- *Доставку товара в любую точку России и стран СНГ.*
- *Комплексную поставку.*
- *Работу по проектам и поставку образцов.*
- *Формирование склада под заказчика.*

- *Сертификаты соответствия на поставляемую продукцию (по желанию клиента).*
- *Тестирование поставляемой продукции.*
- *Поставку компонентов, требующих военную и космическую приемку.*
- *Входной контроль качества.*
- *Наличие сертификата ISO.*

В составе нашей компании организован Конструкторский отдел, призванный помогать разработчикам, и инженерам.

Конструкторский отдел помогает осуществить:

- *Регистрацию проекта у производителя компонентов.*
- *Техническую поддержку проекта.*
- *Защиту от снятия компонента с производства.*
- *Оценку стоимости проекта по компонентам.*
- *Изготовление тестовой платы монтаж и пусконаладочные работы.*

Тел: +7 (812) 336 43 04 (многоканальный)
Email: org@lifeelectronics.ru

www.lifeelectronics.ru