DESCRIPTION

PT2240B is encoder utilizing CMOS Technology specially designed for remote control applications. It has 2^{20} Address. It can support up to 4 Data Bits and is housed in 8 pin SOP package. It encodes address and data codes into a coded waveform suitable for RF modulation. The pin assignments and application circuit are optimized for easy PCB Layout and cost saving advantage. Furthermore, PT2240B's intrinsic feature of being able to support 4 data bits considerably reduces inventory pressures.

FEATURES

- CMOS technology
- Low power consumption
- Least external components
- High noise immunity
- Single resistor oscillator
- Operating voltage: 1.8~15V
- 4 Data pins
- 2^{20} address codes
- Available in SOP package
- Reduction of inventory pressures

APPLICATIONS

- Burglar alarm system
- Car security system
- Car/Garage door controller
- Home/Office security system
- Personal alarm system

BLOCK DIAGRAM

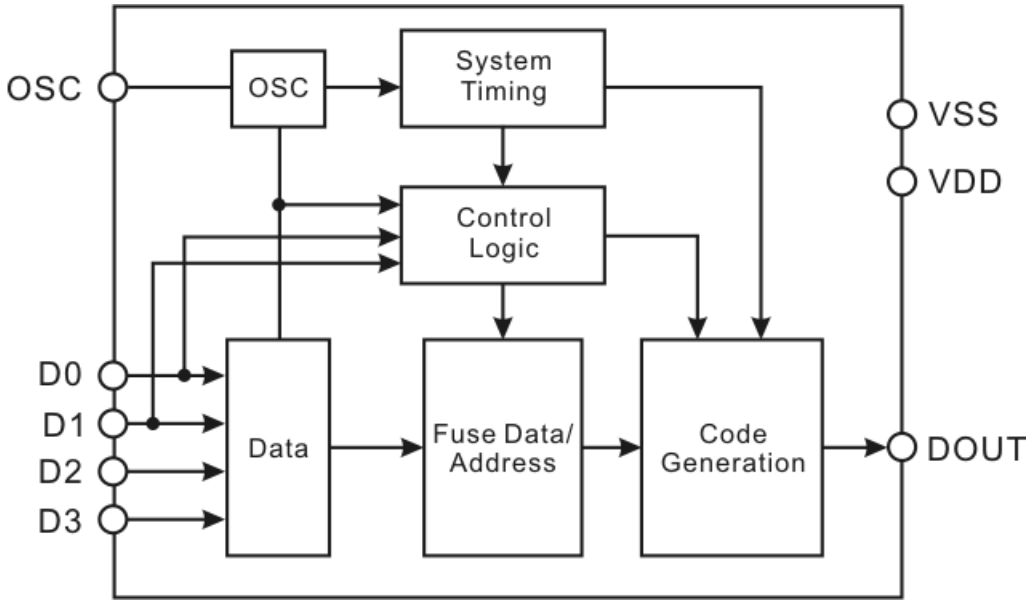

APPLICATION CIRCUIT

8 PINS

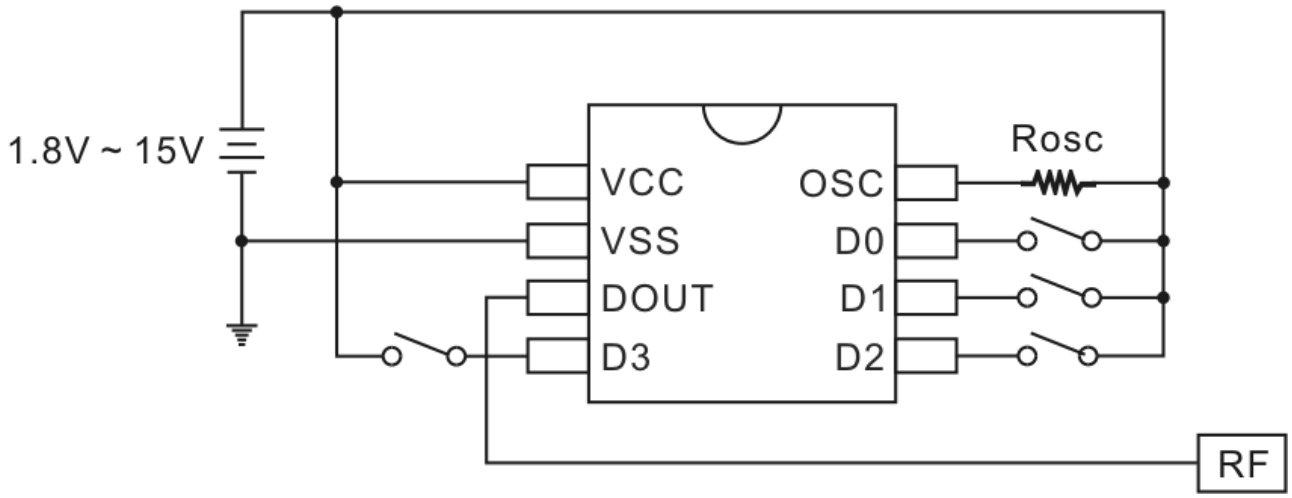

POWER FAILURE CIRCUIT

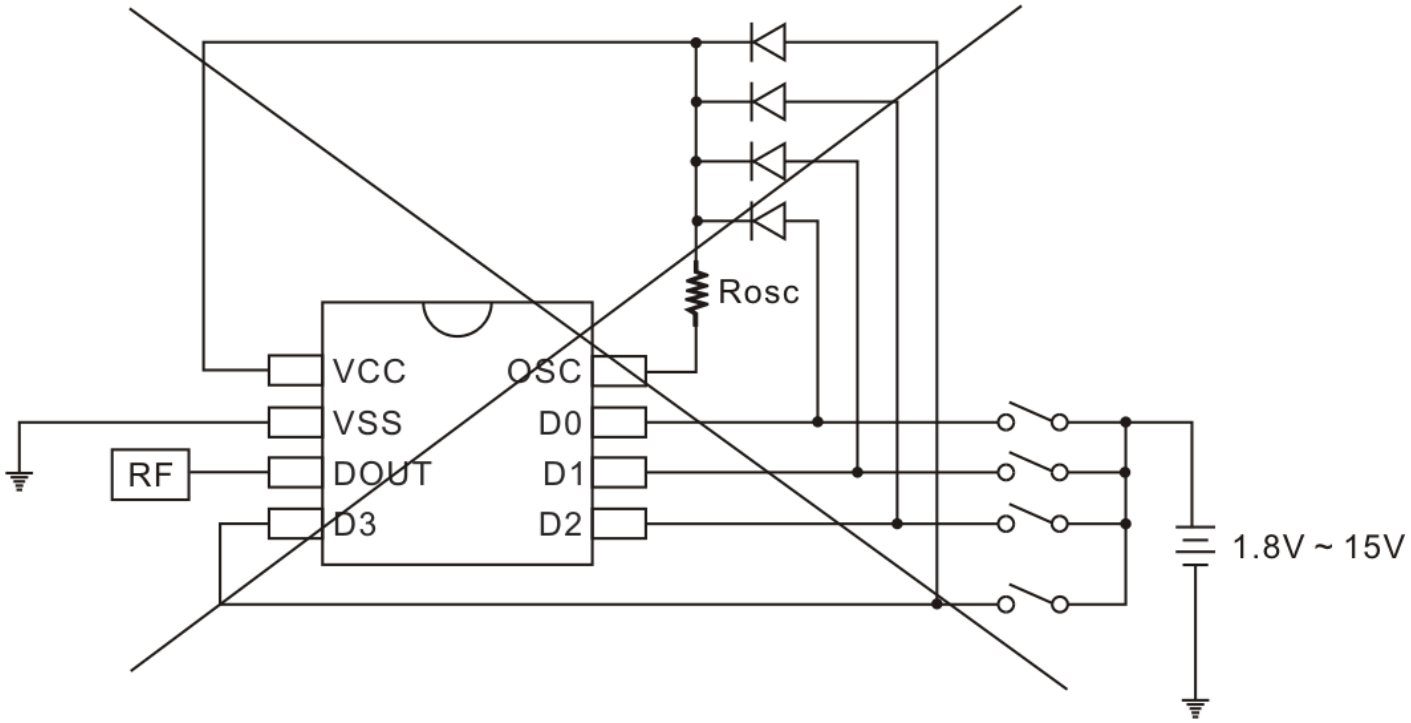

Warning: Be cautious to use this circuit which will cause the IC shutdown or even damaged.

ORDER INFORMATION

Valid Part Number	Package Type	Top Code
PT2240B-S	8 Pins, SOP, 150mil	PT2240B-S

PIN CONFIGURATION

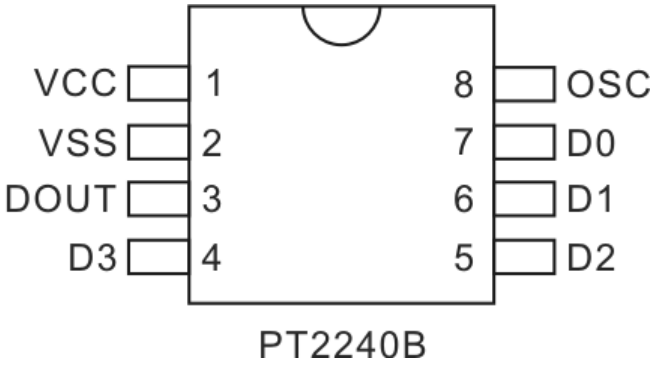

PIN DESCRIPTION

Pin Name	I/O	Description	Pin No.
VDD	-	Positive power supply	1
VSS	-	Negative power supply	2
DOUT	O	Data output pin Normal=”Low”	3
D0, D1, D2, D3	I	Data pin	7, 6, 5, 4
OSC	I	Oscillator pin	8

FUNCTION DESCRIPTION

PT2240B encodes the address code and data set at D0 ~ D3 and A0 ~ A19 into a special waveform and outputs it to the DOUT. This waveform is fed to the RF modulator for transmission.

CODE BITS

A Code Bit is the basic component of the encoded waveform, and can be classified as either an (Address/Data) Bit or a SYNC (Synchronous) Bit.

ADDRESS/DATA BIT WAVEFORM

An Address/Data Bit can be designated as either Bit “0” or “1” if it is in High or Low State respectively. One bit waveform consists of one pulse cycle and each pulse cycle has 128 oscillating time periods. For further details, please refer to the diagram below:

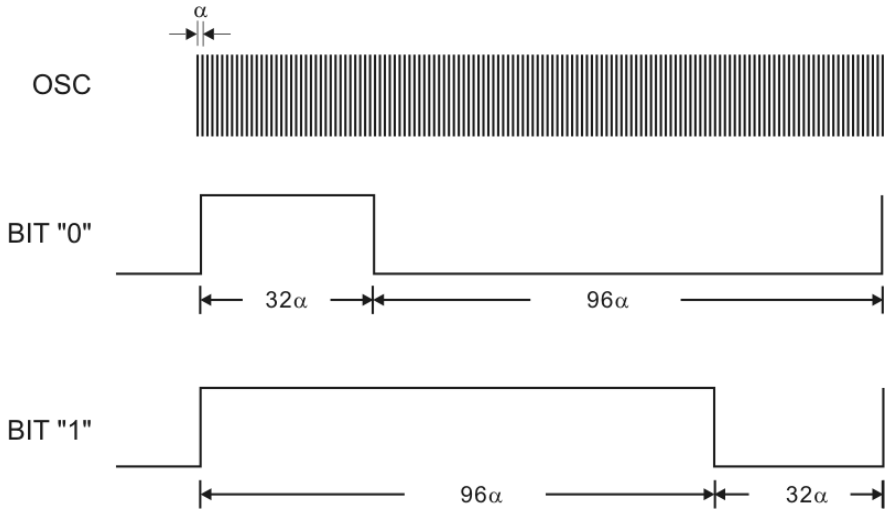

where the oscillating time period, α =1/f and (f is the oscillation frequency)

As you can see in the diagram above, Bit “0” consist of a “High“ Pulse for 32α (where α=oscillating time period) then changes to “LOW” Pulse for 96α. Likewise, for Bit “1”, the “High” Pulse for 96α is followed by “Low” Pulse for 32α.

SYNCHRONOUS (SYNC.) BIT WAVEFORM

The Synchronous Bit Waveform is 8 bits long with 1/32 bit width pulse. Please refer to the diagram below:

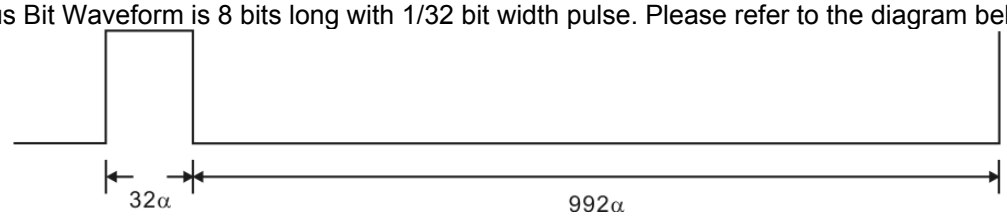

CODE WORD

A group of Code Bits is called a Code Word. A Code Word consists of 20 Address/4 Data Bits followed by one Sync Bit. Please refer to the diagram below:

A0	A1	A2	A3	……	A16	A17	A18	A19	D3	D2	D1	D0	Sync. bit

SINGLE RESISTOR OSCILLATOR

The built-in oscillator circuit of PT2240B allows a precision oscillator to be constructed by connecting an external resistor (Rosc) to the OSC Pin. The typical oscillator frequency with various resistor values for PT2240B is given below:

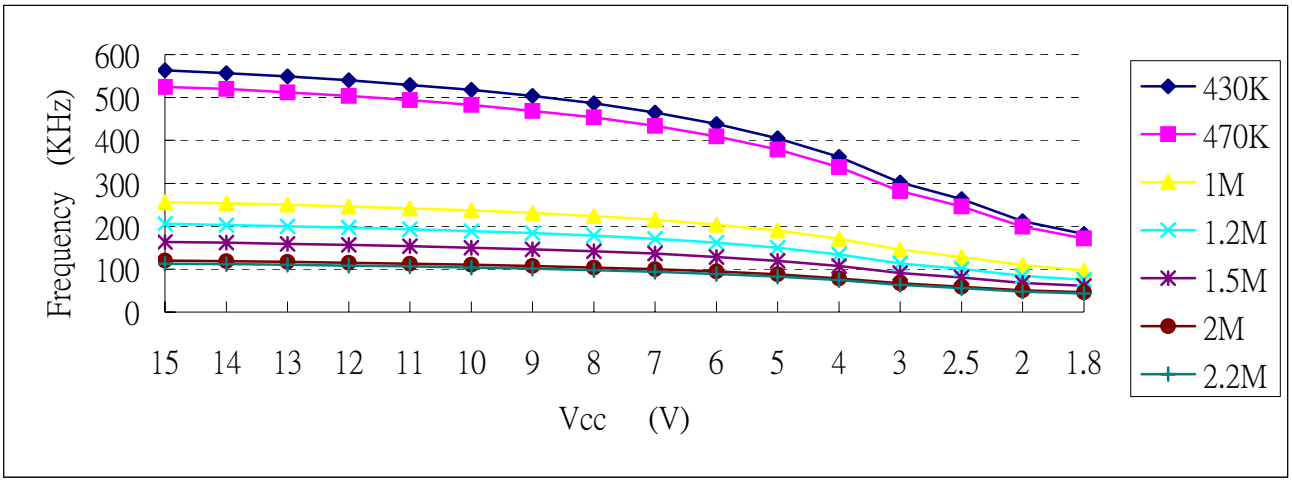

ABSOLUTE MAXIMUM RATINGS

Parameter	Symbol	Condition	Rating	Unit
Operating voltage	VDD		-0.3 ~ 15	V
Input voltage	VIN	VDD=12V All outputs not connected	VSS-0.3 ~ VDD+0.3	V
Operating temperature	Topr	VDD=12V	-40 ~ +85	℃
Storage temperature	Tstg		-65 ~ +150	℃

DC ELECTRICAL CHARACTERISTICS

(Unless otherwise specified, Ta=25℃, VDD=12V)

Parameter	Symbol	Condition	Min.	Typ.	Max.	Unit
Operating voltage	VDD		1.8	12	15	V
Stand-by current	ISB	OSC connected to “Low” other pins floating	-	-	1	μA
Operating current	IOP	Connect one data pin to “high”	-*	-	5	mA
DOUT output current	IOH	VDD=12V, VOH=5V	30	25	-	mA
		VDD=9V, VOH=4.5V	12	15	-	
		VDD=3V, VOH=1.5V	1.2	1.4	-	

PACKAGE INFORMATION

8 PINS, SOP, 150MIL

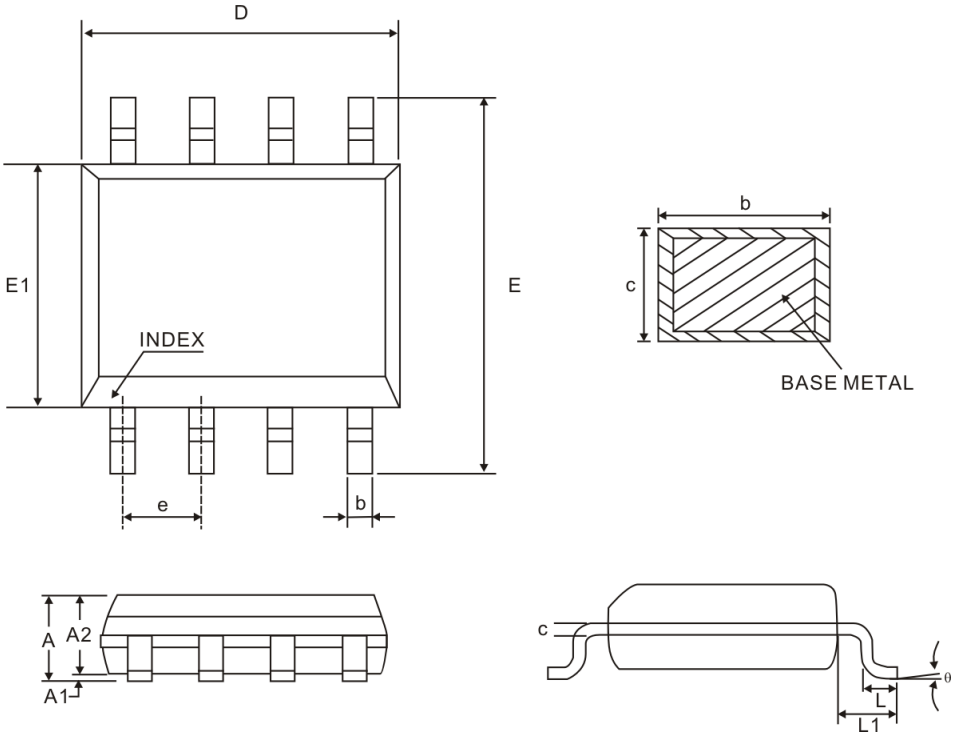

Symbol	Millimeter		
	Min.	Nom.	Max.
A	1.35	1.60	1.75
A1	0.10	0.15	0.25
A2	1.25	1.40	1.65
b	0.33	-	0.51
c	0.17	-	0.25
D	4.80	4.90	5.00
E	5.80	6.00	6.20
E1	3.80	3.90	4.00
e	1.27BSC		
L	0.40	0.60	1.27
L1	1.04REF		
θ	0°	-	8°

Notes:
1. Refer to JEDEC MS-012AA
2. All dimensions are in millimeter

IMPORTANT NOTICE

Princeton Technology Corporation (PTC) reserves the right to make corrections, modifications, enhancements, improvements, and other changes to its products and to discontinue any product without notice at any time.
PTC cannot assume responsibility for use of any circuitry other than circuitry entirely embodied in a PTC product. No circuit patent licenses are implied.

Princeton Technology Corp.
2F, 233-1, Baociao Road,
Sindian, Taipei 23145, Taiwan
Tel: 886-2-66296288
Fax: 886-2-29174598
http://www.princeton.com.tw

ООО «ЛайфЭлектроникс» “LifeElectronics” LLC

ИНН 7805602321 КПП 780501001 Р/С 40702810122510004610 ФАКБ "АБСОЛЮТ БАНК" (ЗАО) в г.Санкт-Петербурге К/С 30101810900000000703 БИК 044030703

Компания «Life Electronics» занимается поставками электронных компонентов импортного и отечественного производства от производителей и со складов крупных дистрибьюторов Европы, Америки и Азии.

С конца 2013 года компания активно расширяет линейку поставок компонентов по направлению коаксиальный кабель, кварцевые генераторы и конденсаторы (керамические, пленочные, электролитические), за счёт заключения дистрибьюторских договоров

Мы предлагаем:

- *Конкурентоспособные цены и скидки постоянным клиентам.*
- *Специальные условия для постоянных клиентов.*
- *Подбор аналогов.*
- *Поставку компонентов в любых объемах, удовлетворяющих вашим потребностям.*

- *Приемлемые сроки поставки, возможна ускоренная поставка.*
- *Доставку товара в любую точку России и стран СНГ.*
- *Комплексную поставку.*
- *Работу по проектам и поставку образцов.*
- *Формирование склада под заказчика.*

- *Сертификаты соответствия на поставляемую продукцию (по желанию клиента).*
- *Тестирование поставляемой продукции.*
- *Поставку компонентов, требующих военную и космическую приемку.*
- *Входной контроль качества.*
- *Наличие сертификата ISO.*

В составе нашей компании организован Конструкторский отдел, призванный помогать разработчикам, и инженерам.

Конструкторский отдел помогает осуществить:

- *Регистрацию проекта у производителя компонентов.*
- *Техническую поддержку проекта.*
- *Защиту от снятия компонента с производства.*
- *Оценку стоимости проекта по компонентам.*
- *Изготовление тестовой платы монтаж и пусконаладочные работы.*

Тел: +7 (812) 336 43 04 (многоканальный)
Email: org@lifeelectronics.ru

www.lifeelectronics.ru