GENERAL DESCRIPTION

The XR16C854/854D[1] (854) is an enhanced quad Universal Asynchronous Receiver and Transmitter (UART) each with 128 bytes of transmit and receive FIFOs, transmit and receive FIFO counters and trigger levels, automatic hardware and software flow control, and data rates of up to 2 Mbps. Each UART has a set of registers that provide the user with operating status and control, receiver error indications, and modem serial interface controls. System interrupts may be tailored to meet design requirements. An internal loopback capability allows onboard diagnostics. The 854 is available in 64-pin LQFP, 68-pin PLCC and 100-pin QFP packages. The 64-pin package only offers the 16 mode interface, but the 68 and 100 pin packages offer an additional 68 mode interface which allows easy integration with Motorola processors. The XR16C854CV (64 pin) offers three state interrupt outputs while the XR16C854DV provides continuous interrupt outputs. The 100 pin package provides additional FIFO status outputs (TXRDY# and RXRDY# A-D), separate infrared transmit data outputs (IRTX A-D) and channel C external clock input (CHCCLK). The XR16C854/854D is compatible with the industry standard ST16C554/554D and ST16C654/654D.

NOTE: *1 Covered by U.S. Patent #5,649,122 and #5,949,787.*

FEATURES

Added feature in devices with top mark date code of "F2 YYWW" and newer:

- 5 volt tolerant inputs

- 2.97 to 5.5 Volt Operation
- Pin-to-pin compatible with the industry standard ST16C554 and ST16C654 and TI's TL16C554N and TL16C754BFN
- Intel or Motorola Data Bus Interface select
- Four independent UART channels
  - Register Set Compatible to 16C550
  - Data rates of up to 2 Mbps
  - Transmit and Receive FIFOs of 128 bytes
  - Programmable TX and RX FIFO Trigger Levels
  - Transmit and Receive FIFO Level Counters
  - Automatic Hardware (RTS/CTS) Flow Control
  - Selectable Auto RTS Flow Control Hysteresis
  - Automatic Software (Xon/Xoff) Flow Control
  - Wireless Infrared (IrDA 1.0) Encoder/Decoder
- Sleep Mode (200 uA typical)
- Crystal oscillator or external clock input

APPLICATIONS

- Portable Appliances
- Telecommunication Network Routers
- Ethernet Network Routers
- Cellular Data Devices
- Factory Automation and Process Controls

FIGURE 1. XR16C854 BLOCK DIAGRAM

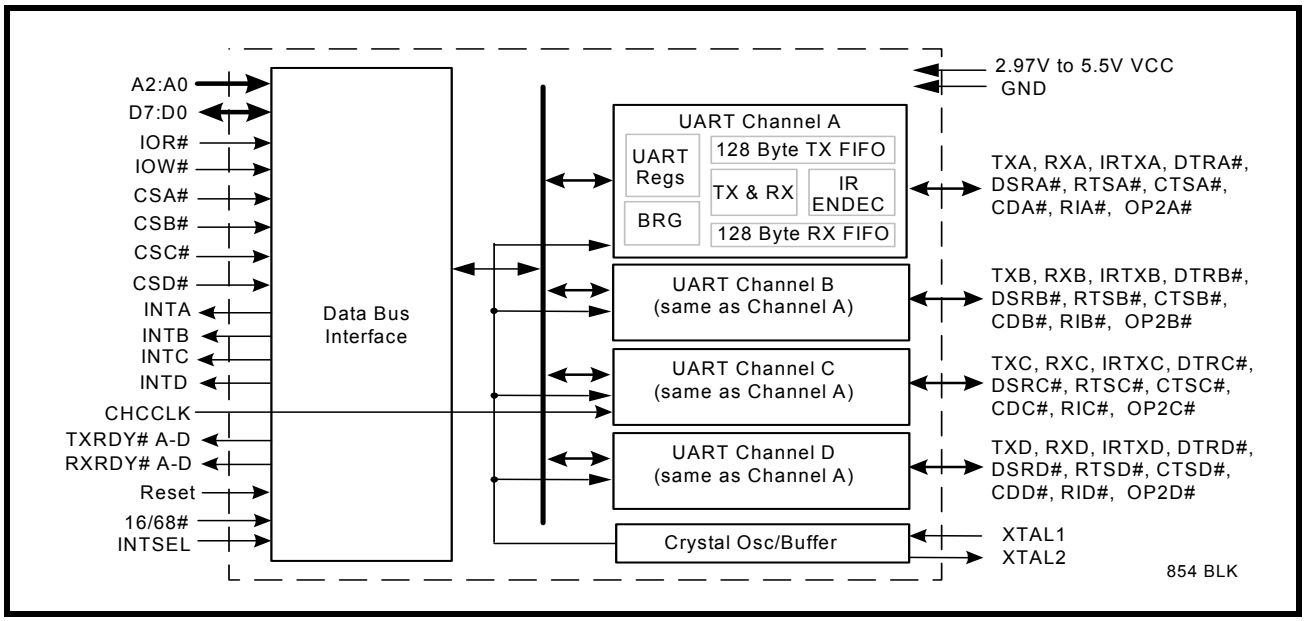

FIGURE 2. PIN OUT ASSIGNMENT FOR 100-PIN QFP PACKAGES IN 16 AND 68 MODE

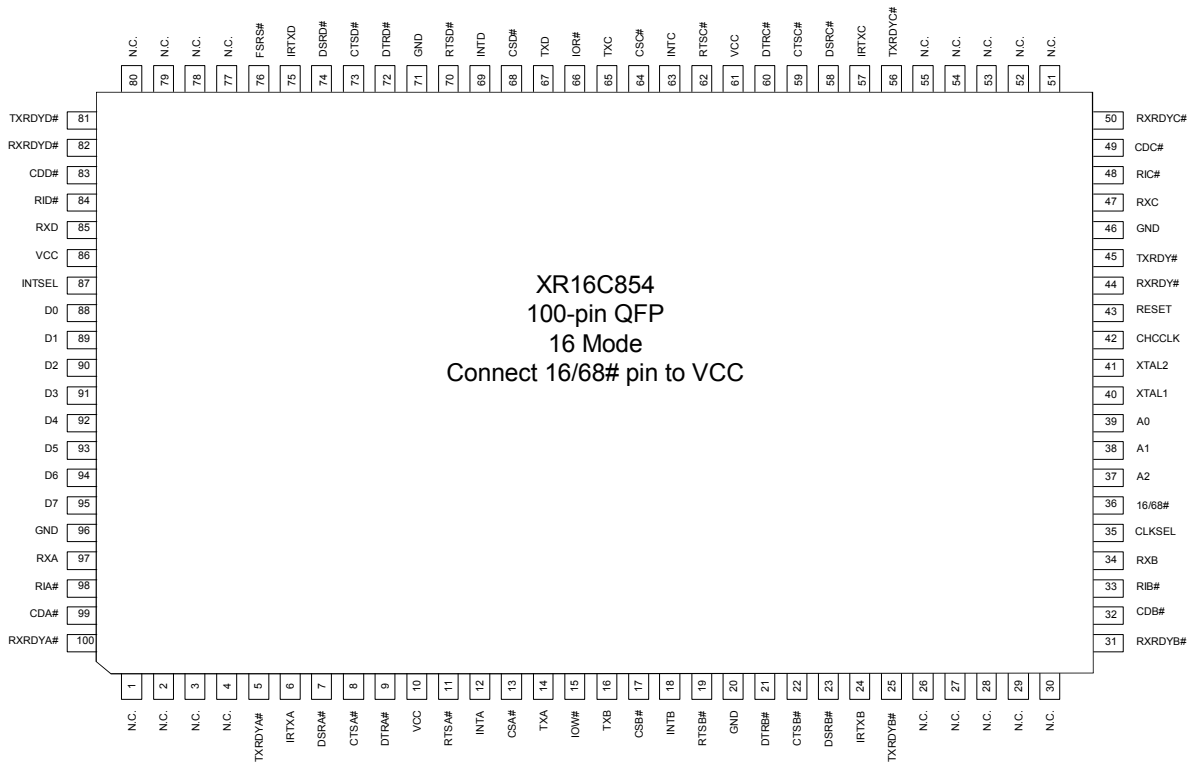

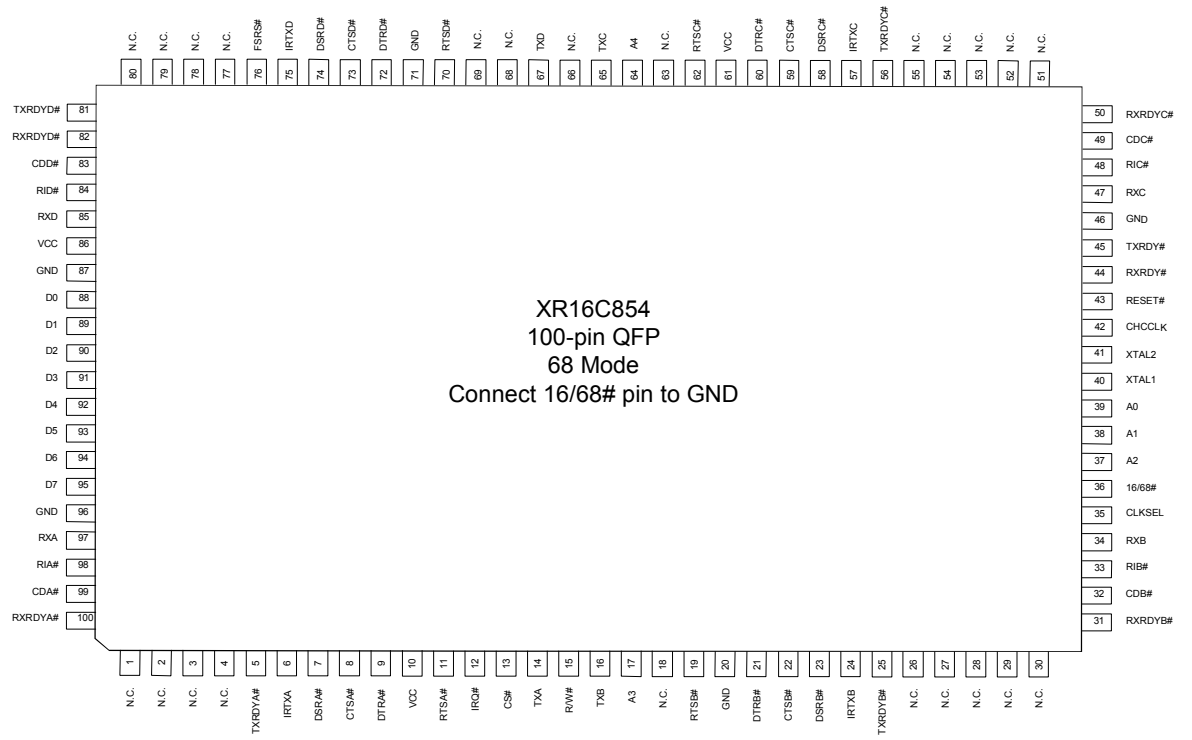

FIGURE 3. PIN OUT ASSIGNMENT FOR PLCC PACKAGES IN 16 AND 68 MODE AND LQFP PACKAGES

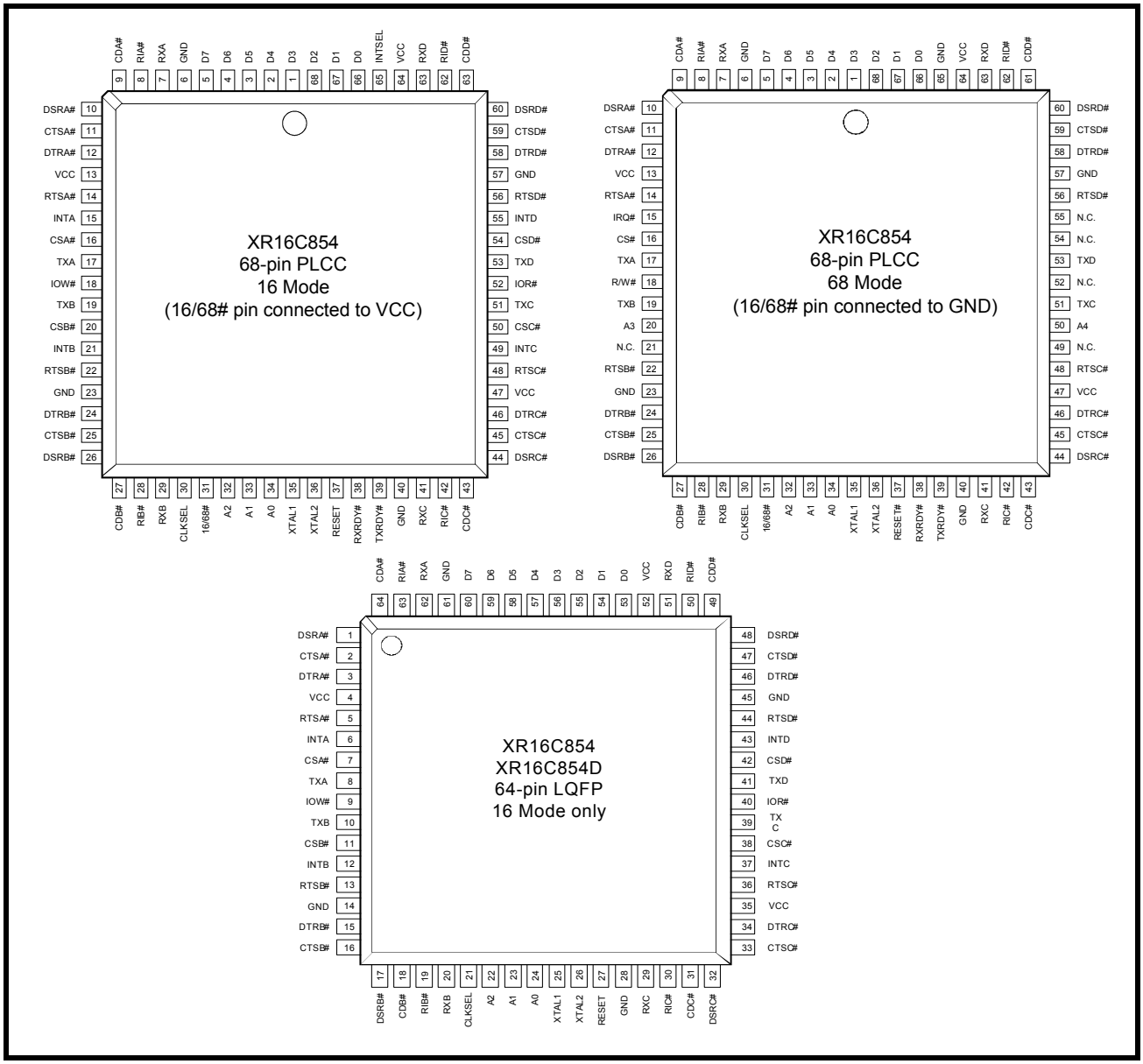

ORDERING INFORMATION

PART NUMBER	PACKAGE	OPERATING TEMPERATURE RANGE	DEVICE STATUS
XR16C854CJ	68-Lead PLCC	0°C to +70°C	Active
XR16C854IJ	68-Lead PLCC	-40°C to +85°C	Active
XR16C854CV	64-Lead LQFP	0°C to +70°C	Active
XR16C854IV	64-Lead LQFP	-40°C to +85°C	Active
XR16C854DCV	64-Lead LQFP	0°C to +70°C	Active
XR16C854DIV	64-Lead LQFP	-40°C to +85°C	Active
XR16C854CQ	100-Lead QFP	0°C to +70°C	Active
XR16C854IQ	100-Lead QFP	-40°C to +85°C	Active

PIN DESCRIPTIONS

Pin Description

NAME	64-LQFP PIN #	68-PLCC PIN#	100-QFP PIN #	TYPE	DESCRIPTION
DATA BUS INTERFACE					
A2 A1 A0	22 23 24	32 33 34	37 38 39	I	Address data lines [2:0]. These 3 address lines select one of the internal registers in UART channel A-D during a data bus transaction.
D7 D6 D5 D4 D3 D2 D1 D0	60 59 58 57 56 55 54 53	5 4 3 2 1 68 67 66	95 94 93 92 91 90 89 88	I/O	Data bus lines [7:0] (bidirectional).
IOR# (N.C.)	40	52	66	I	When 16/68# pin is at logic 1, the Intel bus interface is selected and this input becomes read strobe (active low). The falling edge instigates an internal read cycle and retrieves the data byte from an internal register pointed by the address lines [A2:A0], puts the data byte on the data bus to allow the host processor to read it on the rising edge. When 16/68# pin is at logic 0, the Motorola bus interface is selected and this input is not used.
IOW# (R/W#)	9	18	15	I	When 16/68# pin is at logic 1, it selects Intel bus interface and this input becomes write strobe (active low). The falling edge instigates the internal write cycle and the rising edge transfers the data byte on the data bus to an internal register pointed by the address lines. When 16/68# pin is at logic 0, the Motorola bus interface is selected and this input becomes read (logic 1) and write (logic 0) signal. Motorola bus interface is not available on the 64 pin package.
CSA# (CS#)	7	16	13	I	When 16/68# pin is at logic 1, this input is chip select A (active low) to enable channel A in the device. When 16/68# pin is at logic 0, this input becomes the chip select (active low) for the Motorola bus interface. Motorola bus interface is not available on the 64 pin package.
CSB# (A3)	11	20	17	I	When 16/68# pin is at logic 1, this input is chip select B (active low) to enable channel B in the device. When 16/68# pin is at logic 0, this input becomes address line A3 which is used for channel selection in the Motorola bus interface. Motorola bus interface is not available on the 64 pin package.
CSC# (A4)	38	50	64	I	When 16/68# pin is at logic 1, this input is chip select C (active low) to enable channel C in the device. When 16/68# pin is at logic 0, this input becomes address line A4 which is used for channel selection in the Motorola bus interface. Motorola bus interface is not available on the 64 pin package.

Pin Description

NAME	64-LQFP PIN #	68-PLCC PIN#	100-QFP PIN #	TYPE	DESCRIPTION
CSD# (N.C.)	42	54	68	I	When 16/68# pin is at logic 1, this input is chip select D (active low) to enable channel D in the device. When 16/68# pin is at logic 0, this input is not used. Motorola bus interface is not available on the 64 pin package.
INTA (IRQ#)	6	15	12	O (OD)	When 16/68# pin is at logic 1 for Intel bus interface, this ouput becomes channel A interrupt output. The output state is defined by the user and through the software setting of MCR[3]. INTA is set to the active mode when MCR[3] is set to a logic 1. INTA is set to the three state mode when MCR[3] is set to a logic 0 (default). See MCR[3]. When 16/68# pin is at logic 0 for Motorola bus interface, this output becomes device interrupt output (active low, open drain). An external pull-up resistor is required for proper operation. Motorola bus interface is not available on the 64 pin package.
INTB INTC INTD (N.C.)	12 37 43	21 49 55	18 63 69	O	When 16/68# pin is at logic 1 for Intel bus interface, these ouputs become the interrupt outputs for channels B, C, and D. The output state is defined by the user through the software setting of MCR[3]. The interrupt outputs are set to the active mode when MCR[3] is set to a logic 1 and are set to the three state mode when MCR[3] is set to a logic 0 (default). See MCR[3]. When 16/68# pin is at logic 0 for Motorola bus interface, these outputs are unused and will stay at logic zero level. Leave these outputs unconnected. Motorola bus interface is not available on the 64 pin package.
INTSEL	-	65	87	I	Interrupt Select (active high, input with internal pull-down). When 16/68# pin is at logic 1 for Intel bus interface, this pin can be used in conjunction with MCR bit-3 to enable or disable the INT A-D pins or override MCR bit-3 and enable the interrupt outputs. Interrupt outputs are enabled continuously by making this pin a logic 1. Making this pin a logic 0 allows MCR bit-3 to enable and disable the interrupt output pins. In this mode, MCR bit-3 is set to a logic 1 to enable the continuous output. See MCR bit-3 description for full detail. <u>This pin must be at logic 0 in the Motorola bus interface mode.</u> Due to pin limitations on 64 pin packages, this pin is not available. To cover this limitation, two 64 pin LQFP packages versions are offered. The XR16C854D operates in the continuous interrupt enable mode by bonding this pin to VCC internally.
TXRDYA# TXRDYB# TXRDYC# TXRDYD#	- - - -	- - - -	5 25 56 81	O	UART channels A-D Transmitter Ready (active low). The outputs provide the TX FIFO/THR status for transmit channels A-D. See Table 5. If these outputs are unused, leave them unconnected.
RXRDYA# RXRDYB# RXRDYC# RXRDYD#	- - - -	- - - -	100 31 50 82	O	UART channels A-D Receiver Ready (active low). This output provides the RX FIFO/RHR status for receive channels A-D. See Table 5. If these outputs are unused, leave them unconnected.

Pin Description

NAME	64-LQFP PIN #	68-PLCC PIN#	100-QFP PIN #	TYPE	DESCRIPTION
TXRDY#	-	39	45	O	Transmitter Ready (active low). This output is a logically wire-ORed status of TXRDY# A-D. See Table 5. If this output is unused, leave it unconnected.
RXRDY#	-	38	44	O	Receiver Ready (active low). This output is a logically wire-ORed status of RXRDY# A-D. See Table 5. If this output is unused, leave it unconnected.
FSRS#	-	-	76	I	FIFO Status Register Select (active low input with internal pull-up). The content of the FSTAT register is placed on the data bus when this pin becomes active. However it should be noted, D0-D3 contain the inverted logic states of TXRDY# A-D pins, and D4-D7 the logic states (un-inverted) of RXRDY# A-D pins. Address line is not required when reading this status register.
MODEM OR SERIAL I/O INTERFACE					
TXA TXB TXC TXD	8 10 39 41	17 19 51 53	14 16 65 67	O	UART channels A-D Transmit Data and infrared transmit data. Standard transmit and receive interface is enabled when MCR[6] = 0. In this mode, the TX signal will be a logic 1 during reset, or idle (no data). Infrared IrDA transmit and receive interface is enabled when MCR[6] = 1. In the Infrared mode, the inactive state (no data) for the Infrared encoder/decoder interface is a logic 0.
IRTXA IRTXB IRTXC IRTXD	- - - -	- - - -	6 24 57 75	O	UART channel A-D Infrared Transmit Data. The inactive state (no data) for the Infrared encoder/decoder interface is a logic 0. Regardless of the logic state of MCR bit-6, this pin will be operating in the Infrared mode.
RXA RXB RXC RXD	62 20 29 51	7 29 41 63	97 34 47 85	I	UART channel A-D Receive Data or infrared receive data. Normal receive data input must idle at logic 1 condition. The infrared receiver pulses typically idles at logic 0 but can be inverted by software control prior going in to the decoder, see FCTR[2].
RTSA# RTSB# RTSC# RTSD#	5 13 36 44	14 22 48 56	11 19 62 70	O	UART channels A-D Request-to-Send (active low) or general purpose output. This output must be asserted prior to using auto RTS flow control, see EFR[6], MCR[1], FCTR[1:0], EMSR[5:4] and IER[6]. Also see **Figure 11**. If these outputs are not used, leave them unconnected.
CTSA# CTSB# CTSC# CTSD#	2 16 33 47	11 25 45 59	8 22 59 73	I	UART channels A-D Clear-to-Send (active low) or general purpose input. It can be used for auto CTS flow control, see EFR[7], and IER[7]. Also see **Figure 11**. These inputs should be connected to VCC when not used.
DTRA# DTRB# DTRC# DTRD#	3 15 34 46	12 24 46 58	9 21 60 72	O	UART channels A-D Data-Terminal-Ready (active low) or general purpose output. If these outputs are not used, leave them unconnected.
DSRA# DSRB# DSRC# DSRD#	1 17 32 48	10 26 44 60	7 23 58 74	I	UART channels A-D Data-Set-Ready (active low) or general purpose input. This input should be connected to VCC when not used.

Pin Description

NAME	64-LQFP PIN #	68-PLCC PIN#	100-QFP PIN #	TYPE	DESCRIPTION
CDA# CDB# CDC# CDD#	64 18 31 49	9 27 43 61	99 32 49 83	I	UART channels A-D Carrier-Detect (active low) or general purpose input. This input should be connected to VCC when not used.
RIA# RIB# RIC# RID#	63 19 30 50	8 28 42 62	98 33 48 84	I	UART channels A-D Ring-Indicator (active low) or general purpose input. This input should be connected to VCC when not used.
ANCILLARY SIGNALS					
XTAL1	25	35	40	I	Crystal or external clock input. This input is not 5V tolerant.
XTAL2	26	36	41	O	Crystal or buffered clock output.
16/68#	-	31	36		Intel or Motorola Bus Select (input with internal pull-up). When 16/68# pin is at logic 1, 16 or Intel Mode, the device will operate in the Intel bus type of interface. When 16/68# pin is at logic 0, 68 or Motorola mode, the device will operate in the Motorola bus type of interface. Motorola bus interface is not available on the 64 pin package.
CLKSEL	21	30	35	I	Baud-Rate-Generator Input Clock Prescaler Select for channels A-D. This input is only sampled during power up or a reset. Connect to VCC for divide by 1 and GND for divide by 4. MCR[7] can override the state of this pin following a reset or initialization. See MCR bit-7 and **Figure 6** in the Baud Rate Generator section.
CHCCLK	-	-	42	I	This input provides the clock for UART channel C. An external 16X baud clock or the crystal oscillator's output, XTAL2, must be connected to this pin for normal operation. This input may also be used with MIDI (Musical Instrument Digital Interface) applications when an external MIDI clock is provided.
RESET (RESET#)	27	37	43	I	When 16/68# pin is at logic 1 for Intel bus interface, this input becomes the Reset pin (active high). In this case, a 40 ns minimum logic 1 pulse on this pin will reset the internal registers and all outputs. The UART transmitter output will be held at logic 1, the receiver input will be ignored and outputs are reset during reset period (Table 18). When 16/68# pin is at a logic 0 for Motorola bus interface, this input becomes Reset# pin (active low). This pin functions similarly, but instead of a logic 1 pulse, a 40 ns minimum logic 0 pulse will reset the internal registers and outputs. Motorola bus interface is not available on the 64 pin package.
VCC	4, 35, 52	13, 47, 64	10, 61, 86	Pwr	2.97V to 5.5V power supply. All input pins, except XTAL1, are 5V tolerant.
GND	14, 28, 45, 61	6, 23, 40, 57	20, 46, 71, 96	Pwr	Power supply common, ground.

Pin Description

NAME	64-LQFP PIN #	68-PLCC PIN#	100-QFP PIN #	TYPE	DESCRIPTION
N.C.	-	-	1, 2, 3, 4, 26, 27, 28, 29, 30, 51, 52, 53, 54, 55, 77, 78, 79, 80		No Connection. These pins are not used in either the Intel or Motorola bus modes.

Pin type: I=Input, O=Output, I/O= Input/output, OD=Output Open Drain.

Factory Test Mode

If the IOR#, IOW# and CS# pins are all asserted (at a logic 0) simultaneously, the 854 will enter a Factory Test Mode. The 854 is not operational in this mode and will exit this mode only upon a power cycle.

1.0 PRODUCT DESCRIPTION

The XR16C854 (854) integrates the functions of 4 enhanced 16C550 Universal Asynchronous Receiver and Transmitter (UART). Each UART is independently controlled having its own set of device configuration registers. The configuration registers set is 16550 UART compatible for control, status and data transfer. Additionally, each UART channel has 128-bytes of transmit and receive FIFOs, automatic RTS/CTS hardware flow control with hysteresis control, automatic Xon/Xoff and special character software flow control, programmable transmit and receive FIFO trigger levels, FIFO level counters, infrared encoder and decoder (IrDA ver 1.0), programmable baud rate generator with a prescaler of divide by 1 or 4, and data rate up to 2 Mbps. The XR16C854 can operate at 3.3 or 5 volts. The 854 is fabricated with an advanced CMOS process.

Enhanced FIFO

The 854 QUART provides a solution that supports 128 bytes of transmit and receive FIFO memory, instead of 64 bytes provided in the ST16C654 and 16 bytes in the ST16C554, or one byte in the ST16C454. The 854 is designed to work with high performance data communication systems, that require fast data processing time. Increased performance is realized in the 854 by the larger transmit and receive FIFOs, FIFO trigger level control, FIFO level counters and automatic flow control mechanism. This allows the external processor to handle more networking tasks within a given time. For example, the ST16C554 with a 16 byte FIFO, unloads 16 bytes of receive data in 1.53 ms (This example uses a character length of 11 bits, including start/stop bits at 115.2Kbps). This means the external CPU will have to service the receive FIFO at 1.53 ms intervals. However with the 128 byte FIFO in the 854, the data buffer will not require unloading/loading for 12.2 ms. This increases the service interval giving the external CPU additional time for other applications and reducing the overall UART interrupt servicing time. In addition, the programmable FIFO level trigger interrupt and automatic hardware/software flow control is uniquely provided for maximum data throughput performance especially when operating in a multi-channel system. The combination of the above greatly reduces the CPU's bandwidth requirement, increases performance, and reduces power consumption.

Data Rate

The 854 is capable of operation up to 2 Mbps at 5V with 16x internal sampling clock rate. The device can operate with a crystal oscillator of up to 24 MHz crystal on pins XTAL1 and XTAL2, or external clock source of 32 MHz on XTAL1 pin. With a typical crystal of 14.74128 MHz and through a software option, the user can set the prescaler bit for data rates of up to 921.6 kbps.

Enhanced Features

The rich feature set of the 854 is available through the internal registers. Automatic hardware/software flow control, selectable transmit and receive FIFO trigger levels, selectable baud rates, infrared encoder/decoder interface, modem interface controls, and a sleep mode are all standard features. MCR bit-5 provides a facility for turning off software flow control with any incoming (RX) character. In the 16 mode INTSEL and MCR bit-3 can be configured to provide a software controlled or continuous interrupt capability. Due to pin limitations for the 64 pin package of the 854, this feature is offered in two different LQFP packages. The XR16C854DCV operates in the continuous interrupt enable mode by internally bonding INTSEL to VCC. The XR16C854CV operates in conjunction with MCR bit-3 by internally bonding INTSEL to GND.

The 68 and 100 pin XR16C854 packages offer a clock prescaler select pin to allow system/board designers to preset the default baud rate table on power up. The CLKSEL pin selects the div-by-1 or div-by-4 prescaler for the baud rate generator. It can then be overridden following initializatioin by MCR bit-7.

The 100 pin package offer several other enhanced features. These features include a CHCCLK clock input, FSTAT register and separate IrDA TX outputs. The CHCCLK must be connected to the XTAL2 pin for normal operation or to external MIDI (Music Instrument Digital Interface) oscillator for MIDI applications. A separate register (FSTAT) is provided for monitoring the real time status of the FIFO signals TXRDY# and RXRDY# for each of the four UART channels (A-D). This reduces polling time involved in accessing individual channels. The 100 pin QFP package also offers four separate IrDA (Infrared Data Association Standard) TX outputs for Infrared applications. These outputs are provided in addition to the standard asynchronous modem data outputs.

2.0 FUNCTIONAL DESCRIPTIONS

2.1 CPU Interface

The CPU interface is 8 data bits wide with 3 address lines and control signals to execute data bus read and write transactions. The 854 data interface supports the Intel compatible types of CPUs and it is compatible to the industry standard 16C550 UART. No clock (oscillator nor external clock) is required to operate a data bus transaction. Each bus cycle is asynchronous using CS# A-D, IOR# and IOW# or CS#, R/W#, A4 and A3 inputs. All four UART channels share the same data bus for host operations. A typical data bus interconnection for Intel and Motorola mode is shown in **Figure 4**.

FIGURE 4. XR16C854/854D TYPICAL INTEL/MOTOROLA DATA BUS INTERCONNECTIONS

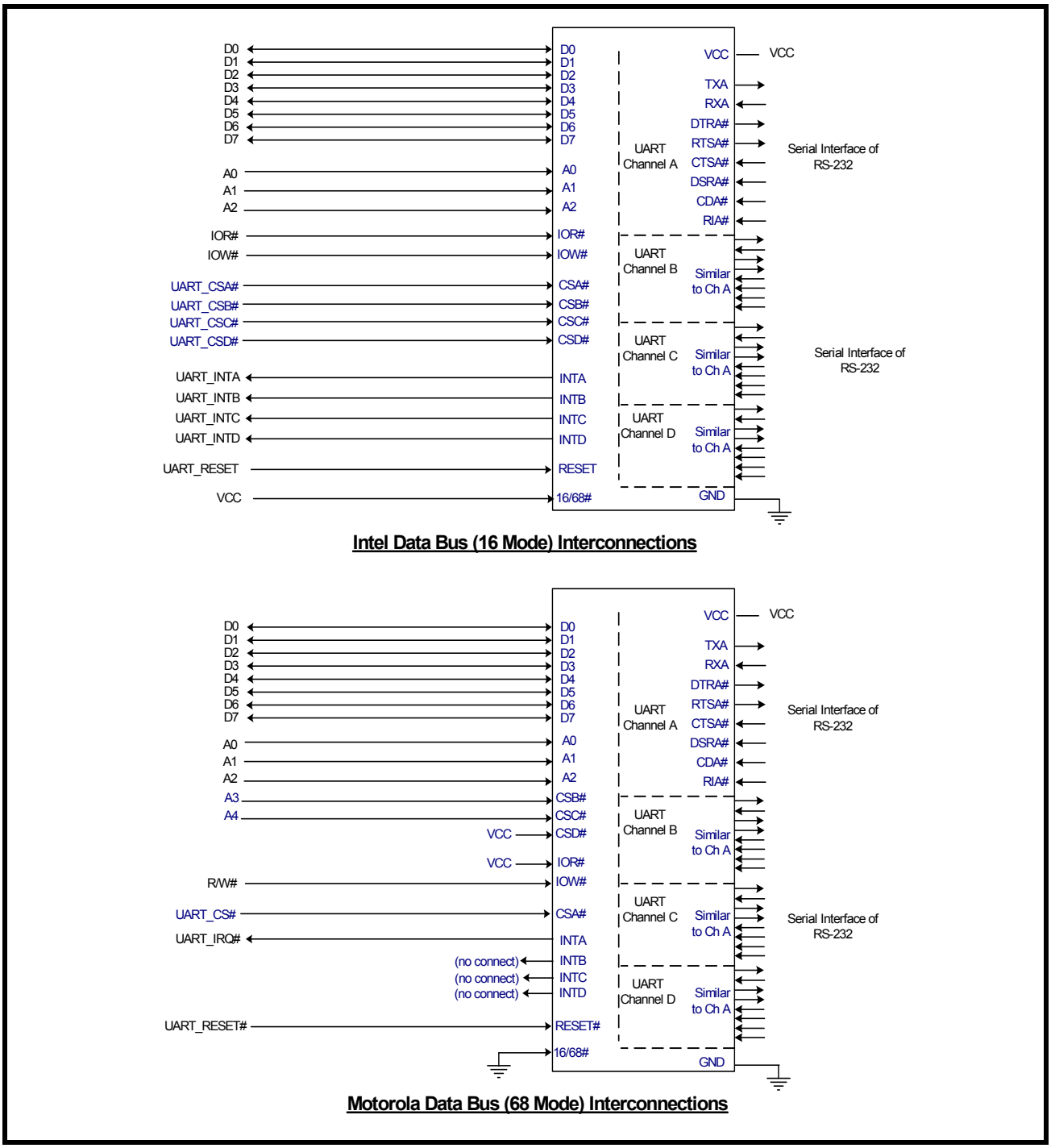

2.2 5-Volt Tolerant Inputs

For devices that have top mark date code "F2 YYWW" and newer, the 854 can accept a voltage of up to 5.5V on any of its inputs (except XTAL1) when operating from 2.97V to 5.5V. XTAL1 is not 5 volt tolerant. Devices that have top mark date code "DC YYWW" and older do not have 5V tolerant inputs.

2.3 Device Reset

The RESET input resets the internal registers and the serial interface outputs in all four channels to their default state (see Table 18). An active high pulse of longer than 40 ns duration will be required to activate the reset function in the device. Following a power-on reset or an external reset, the 854 is software compatible with previous generation of UARTs, 16C454 and 16C554 and 16C654.

2.4 Device Identification and Revision

The XR16C854 provides a Device Identification code and a Device Revision code to distinguish the part from other devices and revisions. To read the identification code from the part, it is required to set the baud rate generator registers DLL and DLM both to 0x00. Now reading the content of the DLM will provide 0x14 for the XR16C854 and reading the content of DLL will provide the revision of the part; for example, a reading of 0x01 means revision A.

2.5 Channel Selection

The UART provides the user with the capability to bi-directionally transfer information between an external CPU and an external serial communication device. During Intel Bus Mode (16/68# pin is connected to VCC), a logic 0 on chip select pins, CSA#, CSB#, CSC# or CSD# allows the user to select UART channel A, B, C or D to configure, send transmit data and/or unload receive data to/from the UART. Selecting all four UARTs can be useful during power up initialization to write to the same internal registers, but do not attempt to read from all four uarts simultaneously. Individual channel select functions are shown in **Table 1** below.

TABLE 1: CHANNEL A-D SELECT IN 16 MODE

CSA#	CSB#	CSC#	CSD#	FUNCTION
1	1	1	1	UART de-selected
0	1	1	1	Channel A selected
1	0	1	1	Channel B selected
1	1	0	1	Channel C selected
1	1	1	0	Channel D selected
0	0	0	0	Channels A-D selected

During Motorola Bus Mode (16/68# pin is connected to GND), the package interface pins are configured for connection with Motorola, and other popular microprocessor bus types. In this mode the 854 decodes two additional addresses, A3 and A4, to select one of the four UART ports. The A3 and A4 address decode function is used only when in the Motorola Bus Mode. See Table 2 below.

TABLE 2: CHANNEL A-D SELECT IN 68 MODE

CS#	A4	A3	FUNCTION
1	N/A	N/A	UART de-selected
0	0	0	Channel A selected
0	0	1	Channel B selected
0	1	0	Channel C selected
0	1	1	Channel D selected

2.6 Channels A-D Internal Registers

Each UART channel in the 854 has a set of enhanced registers for control, monitoring and data loading and unloading. The configuration register set is compatible to those already available in the standard single 16C550. These registers function as data holding registers (THR/RHR), interrupt status and control registers (ISR/IER), a FIFO control register (FCR), receive line status and control registers (LSR/LCR), modem status and control registers (MSR/MCR), programmable data rate (clock) divisor registers (DLL/DLM), and a user accessible scratchpad register (SPR).

Beyond the general 16C550 features and capabilities, the 854 offers enhanced feature registers (EMSR, FLVL, EFR, Xon/Xoff 1, Xon/Xoff 2, FCTR, TRG, FC) that provide automatic RTS and CTS hardware flow control, Xon/Xoff software flow control, automatic RS-485 half-duplex direction output enable/disable, FIFO trigger level control, and FIFO level counters. All the register functions are discussed in full detail later in **"Section 3.0, UART INTERNAL REGISTERS" on page 23**.

2.7 INT Ouputs for Channels A-D

The interrupt outputs change according to the operating mode and enhanced features setup. **Table 3** and 4 summarize the operating behavior for the transmitter and receiver. Also see **Figure 20** through **24**.

TABLE 3: INT PINS OPERATION FOR TRANSMITTER FOR CHANNELS A-D

	FCTR Bit-3	FCR BIT-0 = 0 (FIFO DISABLED)	FCR BIT-0 = 1 (FIFO ENABLED)	
			FCR Bit-3 = 0 (DMA Mode Disabled)	FCR Bit-3 = 1 (DMA Mode Enabled)
INT Pin	0	0 = a byte in THR 1 = THR empty	0 = FIFO above trigger level 1 = FIFO below trigger level or FIFO empty	0 = FIFO above trigger level 1 = FIFO below trigger level or FIFO empty
INT Pin	1	0 = a byte in THR 1 = transmitter empty	0 = FIFO above trigger level 1 = FIFO below trigger level or transmitter empty	0 = FIFO above trigger level 1 = FIFO below trigger level or transmitter empty

TABLE 4: INT PIN OPERATION FOR RECEIVER FOR CHANNELS A-D

	FCR BIT-0 = 0 (FIFO DISABLED)	FCR BIT-0 = 1 (FIFO ENABLED)	
		FCR Bit-3 = 0 (DMA Mode Disabled)	FCR Bit-3 = 1 (DMA Mode Enabled)
INT Pin	0 = no data 1 = 1 byte	0 = FIFO below trigger level 1 = FIFO above trigger level	0 = FIFO below trigger level 1 = FIFO above trigger level

2.8 DMA Mode

The device does not support direct memory access. The DMA Mode (a legacy term) in this document doesn't mean "direct memory access" but refers to data block transfer operation. The DMA mode affects the state of the RXRDY# A-D and TXRDY# A-D output pins. The transmit and receive FIFO trigger levels provide additional flexibility to the user for block mode operation. The LSR bits 5-6 provide an indication when the transmitter is empty or has an empty location(s) for more data. The user can optionally operate the transmit and receive FIFO in the DMA mode (FCR bit-3=1). When the transmit and receive FIFO are enabled and the DMA mode is disabled (FCR bit-3 = 0), the 854 is placed in single-character mode for data transmit or receive operation. When DMA mode is enabled (FCR bit-3 = 1), the user takes advantage of block mode operation by loading or unloading the FIFO in a block sequence determined by the programmed trigger level. The following table show their behavior. Also see **Figure 20** through **24**.

TABLE 5: TXRDY# AND RXRDY# OUTPUTS IN FIFO AND DMA MODE FOR CHANNELS A-D

PINS	FCR BIT-0=0 (FIFO DISABLED)	FCR BIT-0=1 (FIFO ENABLED)	
		FCR Bit-3 = 0 (DMA Mode Disabled)	FCR Bit-3 = 1 (DMA Mode Enabled)
RXRDY#	0 = 1 byte 1 = no data	0 = at least 1 byte in FIFO 1 = FIFO empty	1 to 0 transition when FIFO reaches the trigger level, or timeout occurs. 0 to 1 transition when FIFO empties.
TXRDY#	0 = THR empty 1 = byte in THR	0 = FIFO empty 1 = at least 1 byte in FIFO	0 = FIFO has at least 1 empty location. 1 = FIFO is full.

2.9 Crystal Oscillator or External Clock Input

The 854 includes an on-chip oscillator (XTAL1 and XTAL2) to produce a clock for all four UART sections in the device. The CPU data bus does not require this clock for bus operation. The crystal oscillator provides a system clock to the Baud Rate Generators (BRG) section found in each of the UART. XTAL1 is the input to the oscillator or external clock buffer input with XTAL2 pin being the output. For programming details, see "Programmable Baud Rate Generator."

FIGURE 5. TYPICAL OSCILATOR CONNECTIONSL

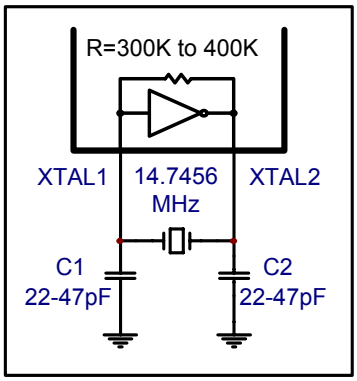

The on-chip oscillator is designed to use an industry standard microprocessor crystal (parallel resonant, fundamental frequency with 10-22 pF capacitance load, ESR of 20-120 ohms and 100ppm frequency tolerance) connected externally between the XTAL1 and XTAL2 pins (see Figure 5). Typical standard crystal frequencies are: 1.8432, 3.6864, 7.3728, 14.7456, 18.432, and 22.1184 MHz. Alternatively, an external clock can be connected to the XTAL1 pin to clock the internal baud rate generator for standard or custom rates. Typical oscillator connections are shown in Figure 5. For further reading on oscillator circuit please see application note DAN108 on EXAR's web site.

2.10 Programmable Baud Rate Generator

Each UART has its own Baud Rate Generator (BRG) with a prescaler. The prescaler is controlled by a software bit in the MCR register. The MCR register bit-7 sets the prescaler to divide the input crystal or external clock by 1 or 4. The clock output of the prescaler goes to the BRG. The BRG further divides this clock by a programmable divisor between 1 and (2^{16} -1) to obtain a 16X sampling rate clock of the serial data rate. The sampling rate clock is used by the transmitter for data bit shifting and receiver for data sampling.

Table 6 shows the standard data rates available with a 14.7456 MHz crystal or external clock at 16X sampling rate. When using a non-standard frequency crystal or external clock, the divisor value can be calculated for DLL/DLM with the following equation.

divisor (decimal) = (XTAL1 clock frequency / prescaler) / (serial data rate x 16)

FIGURE 6. BAUD RATE GENERATOR AND PRESCALER

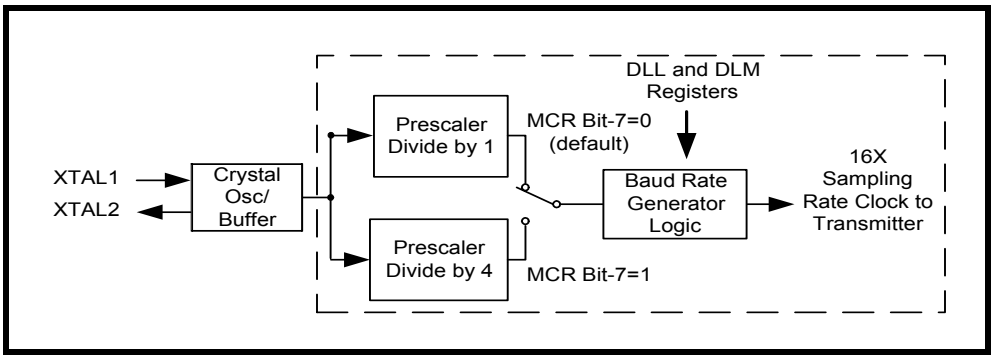

TABLE 6: TYPICAL DATA RATES WITH A 14.7456 MHZ CRYSTAL OR EXTERNAL CLOCK

OUTPUT Data Rate MCR Bit-7=1	OUTPUT Data Rate MCR Bit-7=0 (DEFAULT)	DIVISOR FOR 16x Clock (Decimal)	DIVISOR FOR 16x Clock (HEX)	DLM PROGRAM VALUE (HEX)	DLL PROGRAM VALUE (HEX)	DATA RATE ERROR (%)
100	400	2304	900	09	00	0
600	2400	384	180	01	80	0
1200	4800	192	C0	00	C0	0
2400	9600	96	60	00	60	0
4800	19.2k	48	30	00	30	0
9600	38.4k	24	18	00	18	0
19.2k	76.8k	12	0C	00	0C	0
38.4k	153.6k	6	06	00	06	0
57.6k	230.4k	4	04	00	04	0
115.2k	460.8k	2	02	00	02	0
230.4k	921.6k	1	01	00	01	0

2.11 Transmitter

The transmitter section comprises of an 8-bit Transmit Shift Register (TSR) and 128 bytes of FIFO which includes a byte-wide Transmit Holding Register (THR). TSR shifts out every data bit with the 16X internal clock. A bit time is 16 clock periods. The transmitter sends the start-bit followed by the number of data bits, inserts the proper parity-bit if enabled, and adds the stop-bit(s). The status of the TX FIFO and TSR are reported in the Line Status Register (LSR bit-5 and bit-6).

2.11.1 Transmit Holding Register (THR) - Write Only

The transmit holding register is an 8-bit register providing a data interface to the host processor. The host writes transmit data byte to the THR to be converted into a serial data stream including start-bit, data bits, parity-bit and stop-bit(s). The least-significant-bit (Bit-0) becomes first data bit to go out. The THR is the input register to the transmit FIFO of 128 bytes when FIFO operation is enabled by FCR bit-0. Every time a write operation is made to the THR, the FIFO data pointer is automatically bumped to the next sequential data location.

2.11.2 Transmitter Operation in non-FIFO Mode

The host loads transmit data to THR one character at a time. The THR empty flag (LSR bit-5) is set when the data byte is transferred to TSR. THR flag can generate a transmit empty interrupt (ISR bit-1) when it is enabled by IER bit-1. The TSR flag (LSR bit-6) is set when TSR becomes completely empty.

FIGURE 7. TRANSMITTER OPERATION IN NON-FIFO MODE

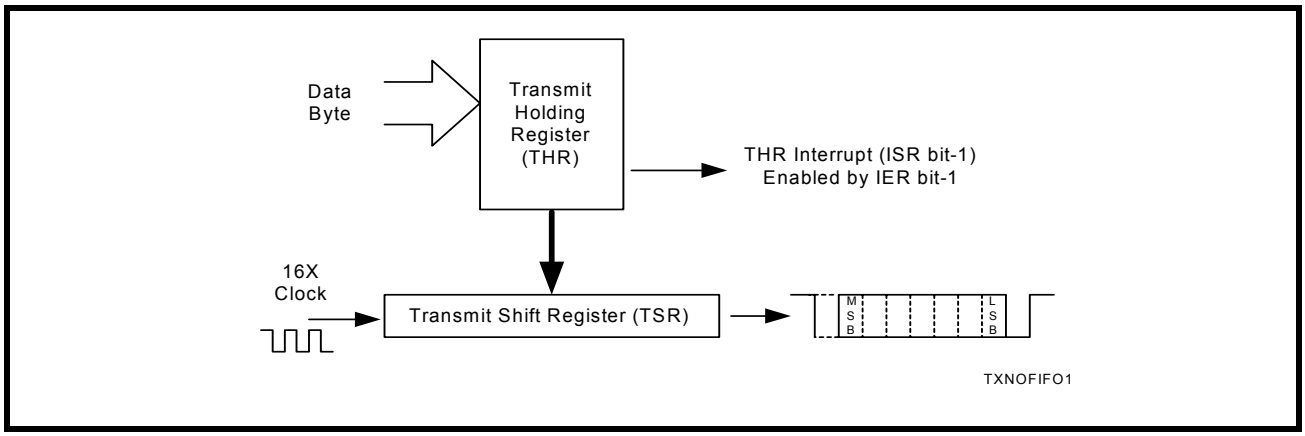

2.11.3 Transmitter Operation in FIFO Mode

The host may fill the transmit FIFO with up to 128 bytes of transmit data. The THR empty flag (LSR bit-5) is set whenever the TX FIFO is empty. The THR empty flag can generate a transmit empty interrupt (ISR bit-1) when the FIFO becomes empty. The transmit empty interrupt is enabled by IER bit-1. The TSR flag (LSR bit-6) is set when TSR/TX FIFO becomes empty.

FIGURE 8. TRANSMITTER OPERATION IN FIFO AND FLOW CONTROL MODE

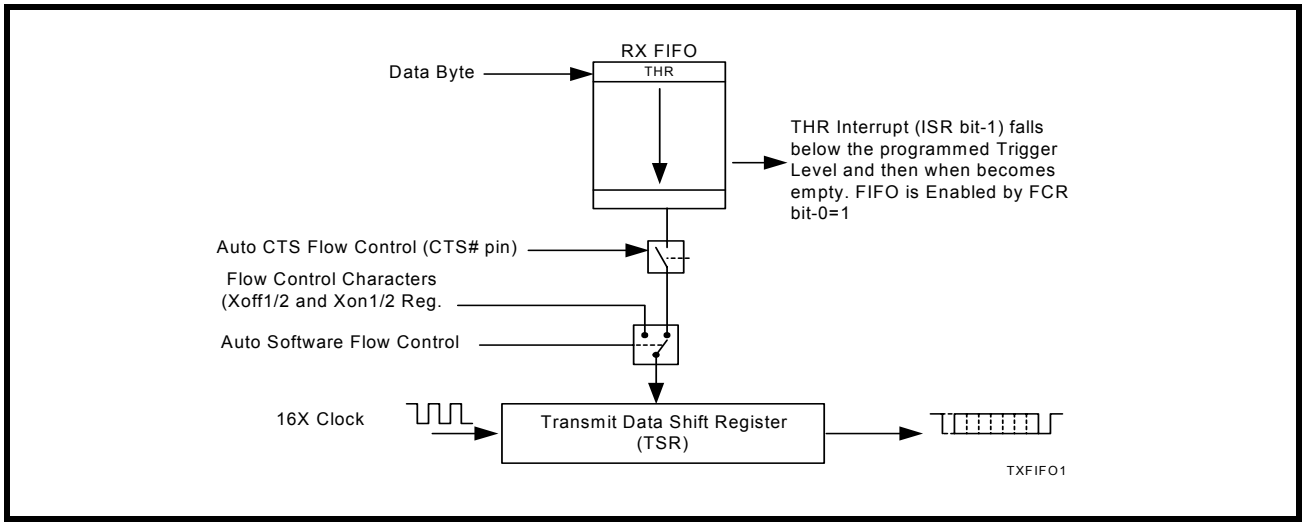

2.12 Receiver

The receiver section contains an 8-bit Receive Shift Register (RSR) and 128 bytes of FIFO which includes a byte-wide Receive Holding Register (RHR). The RSR uses the 16X clock for timing. It verifies and validates every bit on the incoming character in the middle of each data bit. On the falling edge of a start or false start bit, an internal receiver counter starts counting at the 16X clock rate. After 8 clocks the start bit period should be at the center of the start bit. At this time the start bit is sampled and if it is still a logic 0 it is validated. Evaluating the start bit in this manner prevents the receiver from assembling a false character. The rest of the data bits and stop bits are sampled and validated in this same manner to prevent false framing. If there were any error(s), they are reported in the LSR register bits 2-4. Upon unloading the receive data byte from RHR, the receive FIFO pointer is bumped and the error tags are immediately updated to reflect the status of the data byte in RHR register. RHR can generate a receive data ready interrupt upon receiving a character or delay until it reaches the FIFO trigger level. Furthermore, data delivery to the host is guaranteed by a receive data ready time-out interrupt when data is not received for 4 word lengths as defined by LCR[1:0] plus 12 bits time. This is equivalent to 3.7-4.6 character times. The RHR interrupt is enabled by IER bit-0.

2.12.1 Receive Holding Register (RHR) - Read-Only

The Receive Holding Register is an 8-bit register that holds a receive data byte from the Receive Shift Register. It provides the receive data interface to the host processor. The RHR register is part of the receive FIFO of 128 bytes by 11-bits wide, the 3 extra bits are for the 3 error tags to be reported in LSR register. When the FIFO is enabled by FCR bit-0, the RHR contains the first data character received by the FIFO. After the RHR is read, the next character byte is loaded into the RHR and the errors associated with the current data byte are immediately updated in the LSR bits 2-4.

FIGURE 9. RECEIVER OPERATION IN NON-FIFO MODE

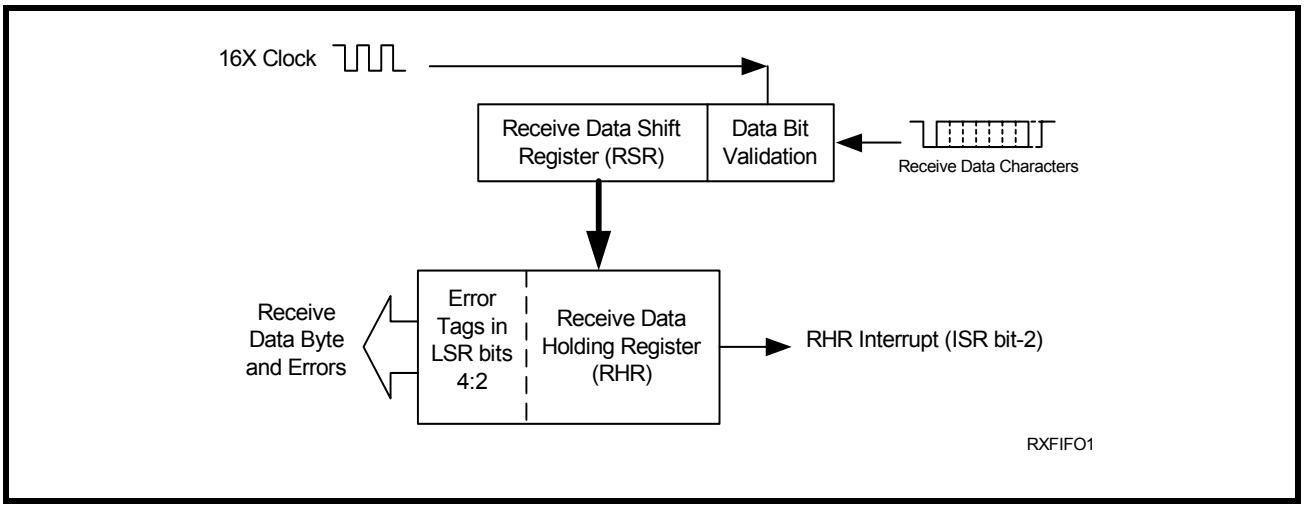

FIGURE 10. RECEIVER OPERATION IN FIFO AND AUTO RTS FLOW CONTROL MODE

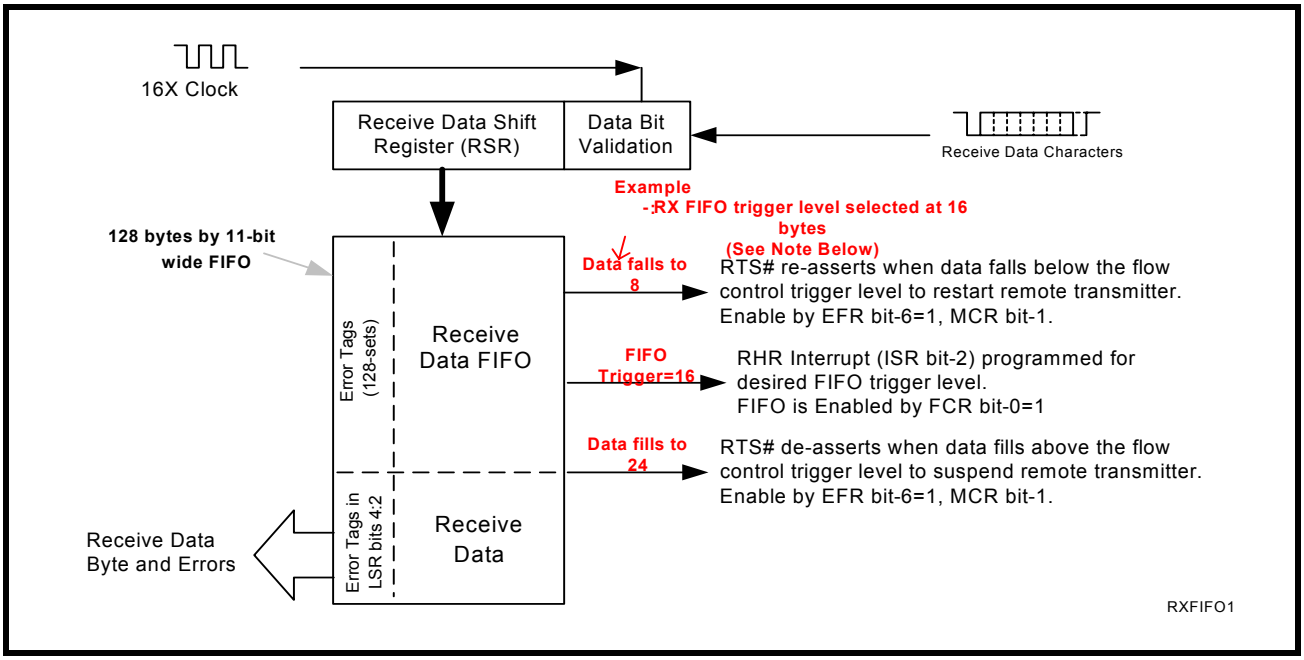

NOTE: *Table-B selected as Trigger Table for* **Figure 10** *(Table 11).*

2.13 Auto RTS Hardware Flow Control

Automatic RTS hardware flow control is used to prevent data overrun to the local receiver FIFO. The RTS# output is used to request remote unit to suspend/resume data transmission. The auto RTS flow control features is enabled to fit specific application requirement (see **Figure 11**):

- Enable auto RTS flow control using EFR bit-6.
- The auto RTS function must be started by asserting RTS# output pin (MCR bit-1 to logic 1 after it is enabled).

If using the Auto RTS interrupt:

- Enable RTS interrupt through IER bit-6 (after setting EFR bit-4). The UART issues an interrupt when the RTS# pin makes a transition from low to high: ISR bit-5 will be set to logic 1.

2.14 Auto RTS Hysteresis

The 854 has a new feature that provides flow control trigger hysteresis while maintaining compatibility with the XR16C850, ST16C650A and ST16C550 family of UARTs. With the Auto RTS function enabled, an interrupt is generated when the receive FIFO reaches the programmed RX trigger level. The RTS# pin will not be forced to a logic 1 (RTS off), until the receive FIFO reaches the upper limit of the hysteresis level. The RTS# pin will return to a logic 0 after the RX FIFO is unloaded to the lower limit of the hysteresis level. Under the above described conditions, the 854 will continue to accept data until the receive FIFO gets full. The Auto RTS function is initiated when the RTS# output pin is asserted to a logic 0 (RTS On). **Table 15** shows the complete details for the Auto RTS# Hysteresis levels. Please note that this table is for programmable trigger levels only (Table D). The hysteresis values for Tables A-C are the next higher and next lower trigger levels in Tables A-C (See **Table 11**).

2.15 Auto CTS Flow Control

Automatic CTS flow control is used to prevent data overrun to the remote receiver FIFO. The CTS# input is monitored to suspend/restart the local transmitter. The auto CTS flow control feature is selected to fit specific application requirement (see **Figure 11**):

- Enable auto CTS flow control using EFR bit-7.

If using the Auto CTS interrupt:

- Enable CTS interrupt through IER bit-7 (after setting EFR bit-4). The UART issues an interrupt when the CTS# pin is de-asserted (logic 1): ISR bit-5 will be set to 1, and UART will suspend transmission as soon as the stop bit of the character in process is shifted out. Transmission is resumed after the CTS# input is re-asserted (logic 0), indicating more data may be sent.

FIGURE 11. AUTO RTS AND CTS FLOW CONTROL OPERATION

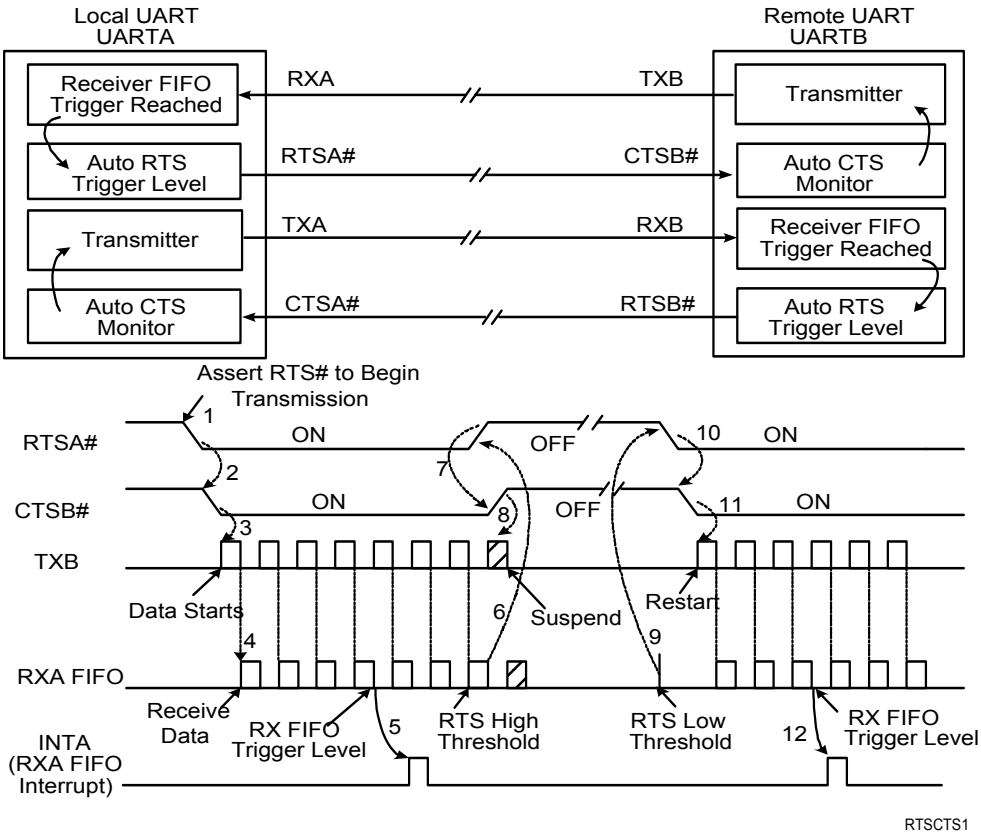

The local UART (UARTA) starts data transfer by asserting RTSA# (1). RTSA# is normally connected to CTSB# (2) of remote UART (UARTB). CTSB# allows its transmitter to send data (3). TXB data arrives and fills UARTA receive FIFO (4). When RXA data fills up to its receive FIFO trigger level, UARTA activates its RXA data ready interrupt (5) and continues to receive and put data into its FIFO. If interrupt service latency is long and data is not being unloaded, UARTA monitors its receive data fill level to match the upper threshold of RTS delay and de-assert RTSA# (6). CTSB# follows (7) and request UARTB transmitter to suspend data transfer. UARTB stops or finishes sending the data bits in its transmit shift register (8). When receive FIFO data in UARTA is unloaded to match the lower threshold of RTS delay (9), UARTA re-asserts RTSA# (10), CTSB# recognizes the change (11) and restarts its transmitter and data flow again until next receive FIFO trigger (12). This same event applies to the reverse direction when UARTA sends data to UARTB with RTSB# and CTSA# controlling the data flow.

2.16 Auto Xon/Xoff (Software) Flow Control

When software flow control is enabled (See Table 17), the 854 compares one or two sequential receive data characters with the programmed Xon or Xoff-1,2 character value(s). If receive character(s) match the programmed values, the 854 will halt transmission as soon as the current character has completed transmission. When a match occurs, the Xoff (if enabled via IER bit-5) flag will be set and the interrupt output pin will be activated. Following a suspension due to a match of the Xoff character, the 854 will monitor the receive data stream for a match to the Xon-1,2 character. If a match is found, the 854 will resume operation and clear the flags (ISR bit-4).

Reset initially sets the contents of the Xon/Xoff 8-bit flow control registers to a logic 0. Following reset the user can write any Xon/Xoff value desired for software flow control. Different conditions can be set to detect Xon/Xoff characters (See Table 17) and suspend/resume transmissions. When double 8-bit Xon/Xoff characters are selected, the 854 compares two consecutive receive characters with two software flow control 8-bit values (Xon1, Xon2, Xoff1, Xoff2) and controls TX transmissions accordingly. Under the above described flow control mechanisms, flow control characters are not placed (stacked) in the user accessible RX data buffer or FIFO.

In the event that the receive buffer is overfilling and flow control needs to be executed, the 854 automatically sends an Xoff message (when enabled) via the serial TX output to the remote modem. The 854 sends the Xoff-1,2 characters two-character-times (= time taken to send two characters at the programmed baud rate) after the receive FIFO crosses the programmed trigger level (for all trigger tables A-D). To clear this condition, the 854 will transmit the programmed Xon-1,2 characters as soon as receive FIFO is less than one trigger level below the programmed trigger level (for Trigger Tables A, B, and C) or when receive FIFO is less than the trigger level minus the hysteresis value (for Trigger Table D). This hysteresis value is the same as the Auto RTS Hysteresis value in **Table 15**. **Table 7** below explains this when Trigger Table-B (See **Table 11**) is selected.

TABLE 7: AUTO XON/XOFF (SOFTWARE) FLOW CONTROL

RX TRIGGER LEVEL	INT PIN ACTIVATION	XOFF CHARACTER(S) SENT (CHARACTERS IN RX FIFO)	XON CHARACTER(S) SENT (CHARACTERS IN RX FIFO)
8	8	8*	0
16	16	16*	8
24	24	24*	16
28	28	28*	24

** After the trigger level is reached, an xoff character is sent after a short span of time (= time required to send 2 characters); for example, after 2.083ms has elapsed for 9600 baud and 10-bit word length setting.*

2.17 Special Character Detect

A special character detect feature is provided to detect an 8-bit character when bit-5 is set in the Enhanced Feature Register (EFR). When this character (Xoff2) is detected, it will be placed in the FIFO along with normal incoming RX data.

The 854 compares each incoming receive character with Xoff-2 data. If a match exists, the received data will be transferred to FIFO and ISR bit-4 will be set to indicate detection of special character. Although the Internal Register Table shows Xon, Xoff Registers with eight bits of character information, the actual number of bits is dependent on the programmed word length. Line Control Register (LCR) bits 0-1 defines the number of character bits, i.e., either 5 bits, 6 bits, 7 bits, or 8 bits. The word length selected by LCR bits 0-1 also determines the number of bits that will be used for the special character comparison. Bit-0 in the Xon, Xoff Registers corresponds with the LSB bit for the receive character.

2.18 Infrared Mode

The 854 UART includes the infrared encoder and decoder compatible to the IrDA (Infrared Data Association) version 1.0. The IrDA 1.0 standard that stipulates the infrared encoder sends out a 3/16 of a bit wide HIGH-pulse for each “0” bit in the transmit data stream. This signal encoding reduces the on-time of the infrared LED, hence reduces the power consumption. See **Figure 12** below.

The infrared encoder and decoder are enabled by setting MCR register bit-6 to a '1'. When the infrared feature is enabled, the transmit data output, TX, idles at logic zero level. Likewise, the RX input assumes an idle level of logic zero from a reset and power up, see Figure 12.

Typically, the wireless infrared decoder receives the input pulse from the infrared sensing diode on the RX pin. Each time it senses a light pulse, it returns a logic 1 to the data bit stream. However, this is not true with some infrared modules on the market which indicate a logic 0 by a light pulse. So the 854 has a provision to invert the input polarity to accomodate this. In this case user can enable FCTR bit-2 to invert the input signal.

FIGURE 12. INFRARED TRANSMIT DATA ENCODING AND RECEIVE DATA DECODING

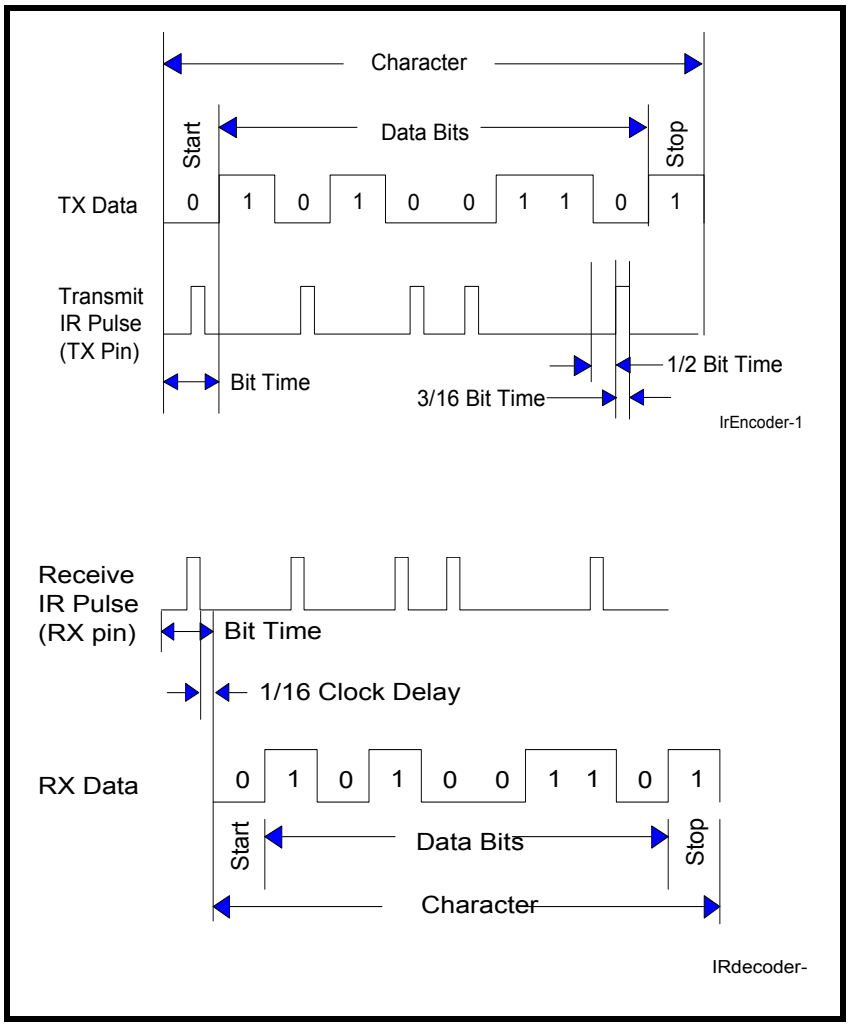

2.19 Sleep Mode with Auto Wake-Up

The 854 supports low voltage system designs, hence, a sleep mode is included to reduce its power consumption when the chip is not actively used.

All of these conditions must be satisfied for the 854 to enter sleep mode:

- no interrupts pending for all four channels of the 854 (ISR bit-0 = 1)
- sleep mode of all four channels are enabled (IER bit-4 = 1)
- modem inputs are not toggling (MSR bits 0-3 = 0)
- RX input pins are idling at a logic 1

The 854 stops its crystal oscillator to conserve power in the sleep mode. User can check the XTAL2 pin for no clock output as an indication that the device has entered the sleep mode.

The 854 resumes normal operation by any of the following:

- a receive data start bit transition (logic 1 to 0)
- a data byte is loaded to the transmitter, THR or FIFO
- a change of logic state on any of the modem or general purpose serial inputs: CTS#, DSR#, CD#, RI#

If the 854 is awakened by any one of the above conditions, it will return to the sleep mode automatically after all interrupting conditions have been serviced and cleared. If the 854 is awakened by the modem inputs, a read to the MSR is required to reset the modem inputs. In any case, the sleep mode will not be entered while an interrupt is pending in any channel. The 854 will stay in the sleep mode of operation until it is disabled by setting IER bit-4 to a logic 0.

If the address lines, data bus lines, IOW#, IOR#, CSA#, CSB#, CSC#, CSD# and modem input lines remain steady when the 854 is in sleep mode, the maximum current will be in the microamp range as specified in the DC Electrical Characteristics on page 41. If the input lines are floating or are toggling while the 854 is in sleep mode, the current can be up to 100 times more. If any of those signals are toggling or floating, then an external buffer would be required to keep the address, data and control lines steady to achieve the low current.

A word of caution: owing to the starting up delay of the crystal oscillator after waking up from sleep mode, the first few receive characters may be lost. Also, make sure the RX input is idling at logic 1 or “marking” condition during sleep mode. This may not occur when the external interface transceivers (RS-232, RS-485 or another type) are also put to sleep mode and cannot maintain the “marking” condition. To avoid this, the system design engineer can use a 47k ohm pull-up resistor on the RX A-D inputs.

2.20 Internal Loopback

The 854 UART provides an internal loopback capability for system diagnostic purposes. The internal loopback mode is enabled by setting MCR register bit-4 to logic 1. All regular UART functions operate normally. **Figure 13** shows how the modem port signals are re-configured. Transmit data from the transmit shift register output is internally routed to the receive shift register input allowing the system to receive the same data that it was sending. The TX pin is held at logic 1 or mark condition while RTS# and DTR# are de-asserted, and CTS#, DSR# CD# and RI# inputs are ignored. Caution: the RX input must be held to a logic 1 during loopback test else upon exiting the loopback test the UART may detect and report a false “break” signal.

FIGURE 13. INTERNAL LOOP BACK IN CHANNELS A-D

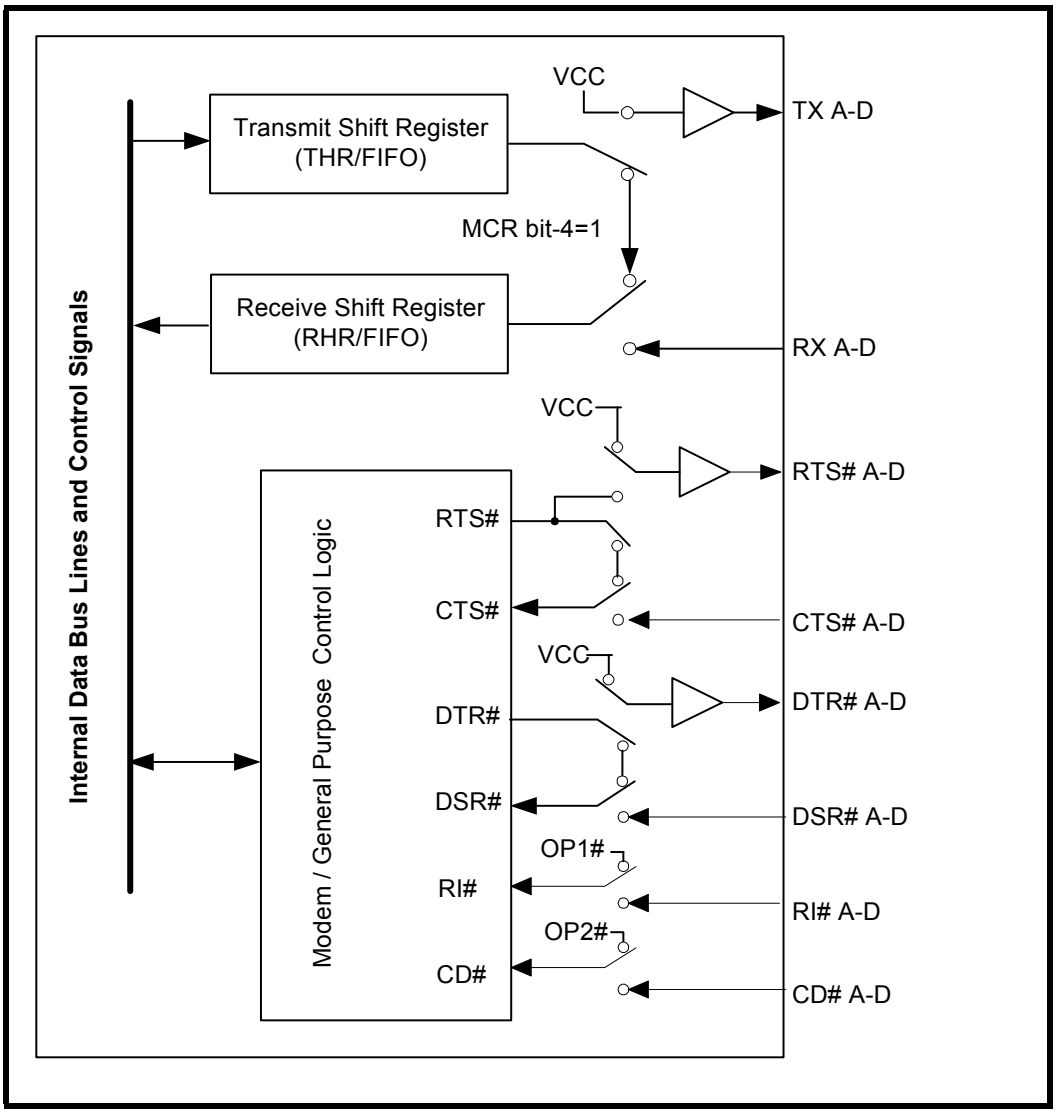

3.0 UART INTERNAL REGISTERS

Each UART channel in the 854 has its own set of configuration registers selected by address lines A0, A1 and A2 with a specific channel selected (See Table 1 and Table 2). The complete register set is shown on Table 8 and Table 9.

TABLE 8: UART CHANNEL A AND B UART INTERNAL REGISTERS

A2,A1,A0 ADDRESSES	REGISTER	READ/WRITE	COMMENTS
16C550 COMPATIBLE REGISTERS			
0 0 0	RHR - Receive Holding Register THR - Transmit Holding Register	Read-only Write-only	LCR[7] = 0
0 0 0	DLL - Div Latch Low Byte	Read/Write	LCR[7] = 1, LCR ≠ 0xBF
0 0 1	DLM - Div Latch High Byte	Read/Write	LCR[7] = 1, LCR ≠ 0xBF
0 0 0	DREV - Device Revision Code	Read-only	DLL, DLM = 0x00, LCR[7] = 1, LCR ≠ 0xBF
0 0 1	DVID - Device Identification Code	Read-only	DLL, DLM = 0x00, LCR[7] = 1, LCR ≠ 0xBF
0 0 1	IER - Interrupt Enable Register	Read/Write	LCR[7] = 0
0 1 0	ISR - Interrupt Status Register FCR - FIFO Control Register	Read-only Write-only	LCR[7] = 0
0 1 1	LCR - Line Control Register	Read/Write	
1 0 0	MCR - Modem Control Register	Read/Write	LCR[7] = 0
1 0 1	LSR - Line Status Register Reserved	Read-only Write-only	LCR[7] = 0
1 1 0	MSR - Modem Status Register Reserved	Read-only Write-only	LCR[7] = 0
1 1 1	SPR - Scratch Pad Register	Read/Write	LCR[7] = 0, FCTR[6] = 0
1 1 1	FLVL - TX/RX FIFO Level Counter Register	Read-only	LCR[7] = 0, FCTR[6] = 1
1 1 1	EMSR - Enhanced Mode Select Register	Write-only	LCR[7] = 0, FCTR[6] = 1
ENHANCED REGISTERS			
0 0 0	TRG - TX/RX FIFO Trigger Level Reg FC - TX/RX FIFO Level Counter Register	Write-only Read-only	LCR = 0xBF
0 0 1	FCTR - Feature Control Reg	Read/Write	LCR = 0xBF
0 1 0	EFR - Enhanced Function Reg	Read/Write	LCR = 0xBF
1 0 0	Xon-1 - Xon Character 1	Read/Write	LCR = 0xBF
1 0 1	Xon-2 - Xon Character 2	Read/Write	LCR = 0xBF
1 1 0	Xoff-1 - Xoff Character 1	Read/Write	LCR = 0xBF
1 1 1	Xoff-2 - Xoff Character 2	Read/Write	LCR = 0xBF
X X X	FSTAT - FIFO Status Register	Read-only	FSRS# pin is logic 0

.

TABLE 9: INTERNAL REGISTERS DESCRIPTION. SHADED BITS ARE ENABLED WHEN EFR BIT-4=1

ADDRESS A2-A0	REG NAME	READ/ WRITE	BIT-7	BIT-6	BIT-5	BIT-4	BIT-3	BIT-2	BIT-1	BIT-0	COMMENT
16C550 Compatible Registers											
0 0 0	RHR	RD	Bit-7	Bit-6	Bit-5	Bit-4	Bit-3	Bit-2	Bit-1	Bit-0	LCR[7] = 0
0 0 0	THR	WR	Bit-7	Bit-6	Bit-5	Bit-4	Bit-3	Bit-2	Bit-1	Bit-0	
0 0 1	IER	RD/WR	0/ CTS# Int. Enable	0/ RTS# Int. Enable	0/ Xoff Int. Enable	0/ Sleep Mode Enable	Modem Stat. Int. Enable	RX Line Stat. Int. Enable	TX Empty Int Enable	RX Data Int. Enable	
0 1 0	ISR	RD	FIFOs Enabled	FIFOs Enabled	0/ INT Source Bit-5	0/ INT Source Bit-4	INT Source Bit-3	INT Source Bit-2	INT Source Bit-1	INT Source Bit-0	
0 1 0	FCR	WR	RXFIFO Trigger	RXFIFO Trigger	0/ TXFIFO Trigger	0/ TXFIFO Trigger	DMA Mode Enable	TX FIFO Reset	RX FIFO Reset	FIFOs Enable	
0 1 1	LCR	RD/WR	Divisor Enable	Set TX Break	Set Par-ity	Even Parity	Parity Enable	Stop Bits	Word Length Bit-1	Word Length Bit-0	
1 0 0	MCR	RD/WR	0/ BRG Pres-caler	0/ IR Mode ENable	0/ XonAny	Internal Lopback Enable	INT Out-put Enable (OP2#)	Rsvd (OP1#)	RTS# Output Control	DTR# Output Control	LCR[7] = 0
1 0 1	LSR	RD	RX FIFO Global Error	THR & TSR Empty	THR Empty	RX Break	RX Fram-ing Error	RX Parity Error	RX Over-run Error	RX Data Ready	
1 1 0	MSR	RD	CD# Input	RI# Input	DSR# Input	CTS# Input	Delta CD#	Delta RI#	Delta DSR#	Delta CTS#	
1 1 1	SPR	RD/WR	Bit-7	Bit-6	Bit-5	Bit-4	Bit-3	Bit-2	Bit-1	Bit-0	LCR[7] = 0 FCTR[6]=0
1 1 1	EMSR	WR	Rsvd	Rsvd	Auto RTS Hyst. bit-3	Auto RTS Hyst. bit-2	Rsvd	Rsvd	Rx/Tx FIFO Count	Rx/Tx FIFO Count	LCR[7] = 0 FCTR[6]=1
1 1 1	FLVL	RD	Bit-7	Bit-6	Bit-5	Bit-4	Bit-3	Bit-2	Bit-1	Bit-0	

TABLE 9: INTERNAL REGISTERS DESCRIPTION. SHADED BITS ARE ENABLED WHEN EFR BIT-4=1

ADDRESS A2-A0	REG NAME	READ/ WRITE	BIT-7	BIT-6	BIT-5	BIT-4	BIT-3	BIT-2	BIT-1	BIT-0	COMMENT
Baud Rate Generator Divisor											
0 0 0	DLL	RD/WR	Bit-7	Bit-6	Bit-5	Bit-4	Bit-3	Bit-2	Bit-1	Bit-0	LCR[7] = 1 LCR ≠ 0xBF
0 0 1	DLM	RD/WR	Bit-7	Bit-6	Bit-5	Bit-4	Bit-3	Bit-2	Bit-1	Bit-0	
0 0 0	DREV	RD	Bit-7	Bit-6	Bit-5	Bit-4	Bit-3	Bit-2	Bit-1	Bit-0	LCR[7] = 1 LCR≠0xBF DLL=0x00 DLM=0x00
0 0 1	DVID	RD	0	0	0	1	0	1	0	0	
Enhanced Registers											
0 0 0	TRG	WR	Bit-7	Bit-6	Bit-5	Bit-4	Bit-3	Bit-2	Bit-1	Bit-0	LCR=0xBF
0 0 0	FC	RD	Bit-7	Bit-6	Bit-5	Bit-4	Bit-3	Bit-2	Bit-1	Bit-0	
0 0 1	FCTR	RD/WR	RX/TX Mode	SCPAD Swap	Trig Table Bit-1	Trig Table Bit-0	Auto RS485 Direction Control	RX IR Input Inv.	Auto RTS Hyst Bit-1	Auto RTS Hyst Bit-0	
0 1 0	EFR	RD/WR	Auto CTS# Enable	Auto RTS# Enable	Special Char Select	Enable IER [7:4], ISR [5:4], FCR[5:4], MCR[7:5]	Soft-ware Flow Cntl Bit-3	Soft-ware Flow Cntl Bit-2	Soft-ware Flow Cntl Bit-1	Soft-ware Flow Cntl Bit-0	
1 0 0	XON1	RD/WR	Bit-7	Bit-6	Bit-5	Bit-4	Bit-3	Bit-2	Bit-1	Bit-0	
1 0 1	XON2	RD/WR	Bit-7	Bit-6	Bit-5	Bit-4	Bit-3	Bit-2	Bit-1	Bit-0	
1 1 0	XOFF1	RD/WR	Bit-7	Bit-6	Bit-5	Bit-4	Bit-3	Bit-2	Bit-1	Bit-0	
1 1 1	XOFF2	RD/WR	Bit-7	Bit-6	Bit-5	Bit-4	Bit-3	Bit-2	Bit-1	Bit-0	
X X X	FSTAT	RD	RX-RDYD#	RX-RDYC#	RX-RDYB#	RX-RDYA#	TX-RDYD#	TX-RDYC#	TX-RDYB#	TX-RDYA#	FSRS# pin is a logic 0. No address lines required.

4.0 INTERNAL REGISTER DESCRIPTIONS

4.1 Receive Holding Register (RHR) - Read- Only

SEE"RECEIVER" ON PAGE 15.

4.2 Transmit Holding Register (THR) - Write-Only

SEE"TRANSMITTER" ON PAGE 14.

4.3 Interrupt Enable Register (IER) - Read/Write

The Interrupt Enable Register (IER) masks the interrupts from receive data ready, transmit empty, line status and modem status registers. These interrupts are reported in the Interrupt Status Register (ISR).

4.3.1 IER versus Receive FIFO Interrupt Mode Operation

When the receive FIFO (FCR BIT-0 = 1) and receive interrupts (IER BIT-0 = 1) are enabled, the RHR interrupts (see ISR bits 2 and 3) status will reflect the following:

A. The receive data available interrupts are issued to the host when the FIFO has reached the programmed trigger level. It will be cleared when the FIFO drops below the programmed trigger level.

B. FIFO level will be reflected in the ISR register when the FIFO trigger level is reached. Both the ISR register status bit and the interrupt will be cleared when the FIFO drops below the trigger level.

C. The receive data ready bit (LSR BIT-0) is set as soon as a character is transferred from the shift register to the receive FIFO. It is reset when the FIFO is empty.

4.3.2 IER versus Receive/Transmit FIFO Polled Mode Operation

When FCR BIT-0 equals a logic 1 for FIFO enable; resetting IER bits 0-3 enables the XR16C854 in the FIFO polled mode of operation. Since the receiver and transmitter have separate bits in the LSR either or both can be used in the polled mode by selecting respective transmit or receive control bit(s).

A. LSR BIT-0 indicates there is data in RHR or RX FIFO.

B. LSR BIT-1 indicates an overrun error has occurred and that data in the FIFO may not be valid.

C. LSR BIT 2-4 provides the type of receive data errors encountered for the data byte in RHR, if any.

D. LSR BIT-5 indicates THR is empty.

E. LSR BIT-6 indicates when both the transmit FIFO and TSR are empty.

F. LSR BIT-7 indicates a data error in at least one character in the RX FIFO.

IER[0]: RHR Interrupt Enable

The receive data ready interrupt will be issued when RHR has a data character in the non-FIFO mode or when the receive FIFO has reached the programmed trigger level in the FIFO mode.

Logic 0 = Disable the receive data ready interrupt (default).

Logic 1 = Enable the receiver data ready interrupt.

IER[1]: THR Interrupt Enable

This bit enables the Transmit Ready interrupt which is issued whenever the THR becomes empty in the non-FIFO mode or when data in the FIFO falls below the programmed trigger level in the FIFO mode. If the THR is empty when this bit is enabled, an interrupt will be generated.

Logic 0 = Disable Transmit Ready interrupt (default).

Logic 1 = Enable Transmit Ready interrupt.

IER[2]: Receive Line Status Interrupt Enable

If any of the LSR register bits 1, 2, 3 or 4 is a logic 1, it will generate an interrupt to inform the host controller about the error status of the current data byte in FIFO. These LSR bits generate an interrupt immediately when the character has been received.

- Logic 0 = Disable the receiver line status interrupt (default).
- Logic 1 = Enable the receiver line status interrupt.

IER[3]: Modem Status Interrupt Enable

- Logic 0 = Disable the modem status register interrupt (default).
- Logic 1 = Enable the modem status register interrupt.

IER[4]: Sleep Mode Enable (requires EFR[4] = 1)

- Logic 0 = Disable Sleep Mode (default).
- Logic 1 = Enable Sleep Mode. **SEE"SLEEP MODE WITH AUTO WAKE-UP" ON PAGE 20.**

IER[5]: Xoff Interrupt Enable (requires EFR[4]=1)0

- Logic 0 = Disable the software flow control, receive Xoff interrupt (default).
- Logic 1 = Enable the software flow control, receive Xoff interrupt. See Software Flow Control section for details.

IER[6]: RTS# Output Interrupt Enable (requires EFR[4]=1)

- Logic 0 = Disable the RTS# interrupt (default).
- Logic 1 = Enable the RTS# interrupt. The UART issues an interrupt when the RTS# pin makes a transition from low to high.

IER[7]: CTS# Input Interrupt Enable (requires EFR[4]=1)

- Logic 0 = Disable the CTS# interrupt (default).
- Logic 1 = Enable the CTS# interrupt. The UART issues an interrupt when CTS# pin makes a transition from low to high.

4.4 Interrupt Status Register (ISR) - Read-Only

The UART provides multiple levels of prioritized interrupts to minimize external software interaction. The Interrupt Status Register (ISR) provides the user with six interrupt status bits. Performing a read cycle on the ISR will give the user the current highest pending interrupt level to be serviced, others are queued up to be serviced next. No other interrupts are acknowledged until the pending interrupt is serviced. The Interrupt Source Table, **Table 10**, shows the data values (bit 0-5) for the interrupt priority levels and the interrupt sources associated with each of these interrupt levels.

4.4.1 Interrupt Generation:

- LSR is by any of the LSR bits 1, 2, 3 and 4.
- RXRDY is by RX trigger level.
- RXRDY Time-out is by a 4-char plus 12 bits delay timer.
- TXRDY is by TX trigger level or TX FIFO empty (or transmitter empty in auto RS-485 control).
- MSR is by any of the MSR bits 0, 1, 2 and 3.
- Receive Xoff/Special character is by detection of a Xoff or Special character.
- CTS# is when its transmitter toggles the input pin (from low to high) during auto CTS flow control.
- RTS# is when its receiver toggles the output pin (from low to high) during auto RTS flow control.

4.4.2 Interrupt Clearing:

- LSR interrupt is cleared by a read to the LSR register.
- RXRDY interrupt is cleared by reading data until FIFO falls below the trigger level.
- RXRDY Time-out interrupt is cleared by reading RHR.
- TXRDY interrupt is cleared by a read to the ISR register or writing to THR.
- MSR interrupt is cleared by a read to the MSR register.
- Xoff interrupt is cleared by a read to ISR or when Xon character(s) is received.
- Special character interrupt is cleared by a read to ISR or after the next character is received.
- RTS# and CTS# flow control interrupts are cleared by a read to the MSR register.

TABLE 10: INTERRUPT SOURCE AND PRIORITY LEVEL

PRIORITY LEVEL	ISR REGISTER STATUS BITS						SOURCE OF INTERRUPT
	BIT-5	BIT-4	BIT-3	BIT-2	BIT-1	BIT-0	
1	0	0	0	1	1	0	LSR (Receiver Line Status Register)
2	0	0	1	1	0	0	RXRDY (Receive Data Time-out)
3	0	0	0	1	0	0	RXRDY (Received Data Ready)
4	0	0	0	0	1	0	TXRDY (Transmit Ready)
5	0	0	0	0	0	0	MSR (Modem Status Register)
6	0	1	0	0	0	0	RXRDY (Received Xoff or Special character)
7	1	0	0	0	0	0	CTS#, RTS# change of state
-	0	0	0	0	0	1	None (default)

ISR[0]: Interrupt Status

- Logic 0 = An interrupt is pending and the ISR contents may be used as a pointer to the appropriate interrupt service routine.
- Logic 1 = No interrupt pending (default condition).

ISR[3:1]: Interrupt Status

These bits indicate the source for a pending interrupt at interrupt priority levels (See Interrupt Source Table 10).

ISR[5:4]: Interrupt Status

These bits are enabled when EFR bit-4 is set to a logic 1. ISR bit-4 indicates that the receiver detected a data match of the Xoff character(s). Note that once set to a logic 1, the ISR bit-4 will stay a logic 1 until a Xon character is received. ISR bit-5 indicates that CTS# or RTS# has changed state.

ISR[7:6]: FIFO Enable Status

These bits are set to a logic 0 when the FIFOs are disabled. They are set to a logic 1 when the FIFOs are enabled.

4.5 FIFO Control Register (FCR) - Write-Only

This register is used to enable the FIFOs, clear the FIFOs, set the transmit/receive FIFO trigger levels, and select the DMA mode. The DMA and FIFO modes are defined as follows:

FCR[0]: TX and RX FIFO Enable

- Logic 0 = Disable the transmit and receive FIFO (default).
- Logic 1 = Enable the transmit and receive FIFOs. This bit must be set to logic 1 when other FCR bits are written or they will not be programmed.

FCR[1]: RX FIFO Reset

This bit is only active when FCR bit-0 is a ‘1’.

- Logic 0 = No receive FIFO reset (default)
- Logic 1 = Reset the receive FIFO pointers and FIFO level counter logic (the receive shift register is not cleared or altered). This bit will return to a logic 0 after resetting the FIFO.

FCR[2]: TX FIFO Reset

This bit is only active when FCR bit-0 is a '1'.

- Logic 0 = No transmit FIFO reset (default).
- Logic 1 = Reset the transmit FIFO pointers and FIFO level counter logic (the transmit shift register is not cleared or altered). This bit will return to a logic 0 after resetting the FIFO.

FCR[3]: DMA Mode Select

Controls the behavior of the TXRDY# and RXRDY# pins. See DMA operation section for details.

- Logic 0 = Normal Operation (default).
- Logic 1 = DMA Mode.

FCR[5:4]: Transmit FIFO Trigger Select

(logic 0 = default, TX trigger level = one)

These 2 bits set the trigger level for the transmit FIFO. The UART will issue a transmit interrupt when the number of characters in the FIFO falls below the selected trigger level, or when it gets empty in case that the FIFO did not get filled over the trigger level on last re-load. Table 11 below shows the selections. EFR bit-4 must be set to '1' before these bits can be accessed. Note that the receiver and the transmitter cannot use different trigger tables. Whichever selection is made last applies to both the RX and TX side.

FCR[7:6]: Receive FIFO Trigger Select

(logic 0 = default, RX trigger level =1)

The FCTR Bits 5-4 are associated with these 2 bits. These 2 bits are used to set the trigger level for the receive FIFO. The UART will issue a receive interrupt when the number of the characters in the FIFO crosses the trigger level. Table 11 shows the complete selections. Note that the receiver and the transmitter cannot use different trigger tables. Whichever selection is made last applies to both the RX and TX side.

TABLE 11: TRANSMIT AND RECEIVE FIFO TRIGGER LEVEL SELECTION

FCTR BIT-5	FCTR BIT-4	FCR BIT-7	FCR BIT-6	FCR BIT-5	FCR BIT-4	RECEIVE TRIGGER LEVEL	TRANSMIT TRIGGER LEVEL	COMPATIBILITY
0	0			0	0		1 (default)	Table-A. 16C550, 16C2550, 16C2552, 16C554, 16C580 compatible.
		0	0			1 (default)		
		0	1			4		
		1	0			8		
		1	1			14		
0	1			0	0		16	Table-B. 16C650A compatible.
				0	1		8	
				1	0		24	
				1	1		30	
		0	0			8		
		0	1			16		
		1	0			24		
		1	1			28		

TABLE 11: TRANSMIT AND RECEIVE FIFO TRIGGER LEVEL SELECTION

FCTR BIT-5	FCTR BIT-4	FCR BIT-7	FCR BIT-6	FCR BIT-5	FCR BIT-4	RECEIVE TRIGGER LEVEL	TRANSMIT TRIGGER LEVEL	COMPATIBILITY
1	0			0	0		8	Table-C. 16C654 compatible.
				0	1		16	
				1	0		32	
				1	1		56	
		0	0			8		
		0	1			16		
		1	0			56		
		1	1			60		
1	1	X	X	X	X	Programmable via TRG register. FCTR[7] = 0.	Programmable via TRG register. FCTR[7] = 1.	Table-D. 16L2750, 16C2850, 16C2852, 16C850, 16C864 compatible.

4.6 Line Control Register (LCR) - Read/Write

The Line Control Register is used to specify the asynchronous data communication format. The word or character length, the number of stop bits, and the parity are selected by writing the appropriate bits in this register.

LCR[1:0]: TX and RX Word Length Select

These two bits specify the word length to be transmitted or received.

BIT-1	BIT-0	WORD LENGTH
0	0	5 (default)
0	1	6
1	0	7
1	1	8

LCR[2]: TX and RX Stop-bit Length Select

The length of stop bit is specified by this bit in conjunction with the programmed word length.

BIT-2	WORD LENGTH	STOP BIT LENGTH (BIT TIME(S))
0	5,6,7,8	1 (default)
1	5	1-1/2
1	6,7,8	2

LCR[3]: TX and RX Parity Select

Parity or no parity can be selected via this bit. The parity bit is a simple way used in communications for data integrity check. See Table 12 for parity selection summary below.

- Logic 0 = No parity.
- Logic 1 = A parity bit is generated during the transmission while the receiver checks for parity error of the data character received.

LCR[4]: TX and RX Parity Select

If the parity bit is enabled with LCR bit-3 set to a logic 1, LCR BIT-4 selects the even or odd parity format.

- Logic 0 = ODD Parity is generated by forcing an odd number of logic 1's in the transmitted character. The receiver must be programmed to check the same format (default).
- Logic 1 = EVEN Parity is generated by forcing an even number of logic 1's in the transmitted character. The receiver must be programmed to check the same format.

LCR[5]: TX and RX Parity Select

If the parity bit is enabled, LCR BIT-5 selects the forced parity format.

- LCR BIT-5 = logic 0, parity is not forced (default).
- LCR BIT-5 = logic 1 and LCR BIT-4 = logic 0, parity bit is forced to a logical 1 for the transmit and receive data.
- LCR BIT-5 = logic 1 and LCR BIT-4 = logic 1, parity bit is forced to a logical 0 for the transmit and receive data.

TABLE 12: PARITY SELECTION

LCR BIT-5	LCR BIT-4	LCR BIT-3	PARITY SELECTION
X	X	0	No parity
0	0	1	Odd parity
0	1	1	Even parity
1	0	1	Force parity to mark, "1"
1	1	1	Forced parity to space, "0"

LCR[6]: Transmit Break Enable

When enabled, the Break control bit causes a break condition to be transmitted (the TX output is forced to a "space', logic 0, state). This condition remains, until disabled by setting LCR bit-6 to a logic 0.

- Logic 0 = No TX break condition (default).
- Logic 1 = Forces the transmitter output (TX) to a "space", logic 0, for alerting the remote receiver of a line break condition.

LCR[7]: Baud Rate Divisors Enable

- Logic 0 = Data registers are selected (default).
- Logic 1 = Divisor latch registers are selected.

4.7 Modem Control Register (MCR) or General Purpose Outputs Control - Read/Write

The MCR register is used for controlling the serial/modem interface signals or general purpose inputs/outputs.

MCR[0]: DTR# Output

The DTR# pin is a modem control output. If the modem interface is not used, this output may be used as a general purpose output.

- Logic 0 = Force DTR# output to a logic 1 (default).
- Logic 1 = Force DTR# output to a logic 0.

MCR[1]: RTS# Output

The RTS# pin is a modem control output and may be used for automatic hardware flow control by enabled by EFR bit-6. If the modem interface is not used, this output may be used as a general purpose output.

- Logic 0 = Force RTS# output to a logic 1 (default).
- Logic 1 = Force RTS# output to a logic 0.

MCR[2]: Reserved

OP1# is not available as an output pin on the 854. But it is available for use during Internal Loopback Mode. In the Loopback Mode, this bit is used to write the state of the modem RI# interface signal. If OP1# output is required for RS485 operation, use the XR16C864.

MCR[3]: INT Output Enable

Enable or disable INT outputs to become active or in three-state. This function is associated with the INTSEL input, see below table for details. This bit is also used to control the OP2# signal during internal loopback mode. INTSEL pin must be set to a logic zero during 68 mode.

- Logic 0 = INT (A-D) outputs disabled (three state) in the 16 mode (default). During loopback mode, it sets OP2# internally to a logic 1.
- Logic 1 = INT (A-D) outputs enabled (active) in the 16 mode. During loopback mode, it sets OP2# internally to a logic 0.

TABLE 13: INT OUTPUT MODES

INTSEL PIN	MCR BIT-3	INT A-D OUTPUTS IN 16 MODE
0	0	Three-State
0	1	Active
1	X	Active

MCR[4]: Internal Loopback Enable

- Logic 0 = Disable loopback mode (default).
- Logic 1 = Enable local loopback mode, see loopback section and Figure 13.

MCR[5]: Xon-Any Enable

- Logic 0 = Disable Xon-Any function (for 16C550 compatibility, default).
- Logic 1 = Enable Xon-Any function. In this mode, any RX character received will resume transmit operation. The RX character will be loaded into the RX FIFO , unless the RX character is an Xon or Xoff character and the 854 is programmed to use the Xon/Xoff flow control.

MCR[6]: Infrared Encoder/Decoder Enable

- Logic 0 = Enable the standard modem receive and transmit input/output interface (default).
- Logic 1 = Enable infrared IrDA receive and transmit inputs/outputs. The TX/RX output/input are routed to the infrared encoder/decoder. The data input and output levels conform to the IrDA infrared interface requirement. The RX FIFO may need to be flushed upon enable. While in this mode, the infrared TX output will be a logic 0 during idle data conditions.

MCR[7]: Clock Prescaler Select

The CLKSEL pin selects this function upon power up or reset. After the power up or reset, this register bit will have control and can alter the logic state.

- Logic 0 = Divide by one. The input clock from the crystal or external clock is fed directly to the Programmable Baud Rate Generator without further modification, i.e., divide by one (default).
- Logic 1 = Divide by four. The prescaler divides the input clock from the crystal or external clock by four and feeds it to the Programmable Baud Rate Generator, hence, data rates become one forth.

4.8 Line Status Register (LSR) - Read Only

This register provides the status of data transfers between the UART and the host. If LSR bits 1-4 are asserted, an interrupt will be generated immediately if IER bit-2 is enabled.

LSR[0]: Receive Data Ready Indicator

- Logic 0 = No data in receive holding register or FIFO (default).
- Logic 1 = Data has been received and is saved in the receive holding register or FIFO.

LSR[1]: Receiver Overrun Flag

- Logic 0 = No overrun error (default).
- Logic 1 = Overrun error. A data overrun error condition occurred in the receive shift register. This happens when additional data arrives while the FIFO is full. In this case the previous data in the receive shift register is overwritten. Note that under this condition the data byte in the receive shift register is not transferred into the FIFO, therefore the data in the FIFO is not corrupted by the error.

LSR[2]: Receive Data Parity Error Tag

- Logic 0 = No parity error (default).
- Logic 1 = Parity error. The receive character in RHR does not have correct parity information and is suspect. This error is associated with the character available for reading in RHR.

LSR[3]: Receive Data Framing Error Tag

- Logic 0 = No framing error (default).
- Logic 1 = Framing error. The receive character did not have a valid stop bit(s). This error is associated with the character available for reading in RHR.

LSR[4]: Receive Break Tag

- Logic 0 = No break condition (default).
- Logic 1 = The receiver received a break signal (RX was a logic 0 for at least one character frame time). In the FIFO mode, only one break character is loaded into the FIFO. The break indication remains until the RX input returns to the idle condition, “mark” or logic 1.

LSR[5]: Transmit Holding Register Empty Flag

This bit is the Transmit Holding Register Empty indicator. The THR bit is set to a logic 1 when the last data byte is transferred from the transmit holding register to the transmit shift register. The bit is reset to logic 0 concurrently with the data loading to the transmit holding register by the host. In the FIFO mode this bit is set when the transmit FIFO is empty, it is cleared when the transmit FIFO contains at least 1 byte.

LSR[6]: THR and TSR Empty Flag

This bit is set to a logic 1 whenever the transmitter goes idle. It is set to logic 0 whenever either the THR or TSR contains a data character. In the FIFO mode this bit is set to a logic 1 whenever the transmit FIFO and transmit shift register are both empty.

LSR[7]: Receive FIFO Data Error Flag

- Logic 0 = No FIFO error (default).
- Logic 1 = A global indicator for the sum of all error bits in the RX FIFO. At least one parity error, framing error or break indication is in the FIFO data. This bit clears when there is no more error(s) in any of the bytes in the RX FIFO.

4.9 Modem Status Register (MSR) - Read Only

This register provides the current state of the modem interface input signals. Lower four bits of this register are used to indicate the changed information. These bits are set to a logic 1 whenever a signal from the modem changes state. These bits may be used for general purpose inputs when they are not used with modem signals.

MSR[0]: Delta CTS# Input Flag

- Logic 0 = No change on CTS# input (default).
- Logic 1 = The CTS# input has changed state since the last time it was monitored. A modem status interrupt will be generated if MSR interrupt is enabled (IER bit-3).

MSR[1]: Delta DSR# Input Flag

- Logic 0 = No change on DSR# input (default).
- Logic 1 = The DSR# input has changed state since the last time it was monitored. A modem status interrupt will be generated if MSR interrupt is enabled (IER bit-3).

MSR[2]: Delta RI# Input Flag

- Logic 0 = No change on RI# input (default).
- Logic 1 = The RI# input has changed from a logic 0 to a logic 1, ending of the ringing signal. A modem status interrupt will be generated if MSR interrupt is enabled (IER bit-3).

MSR[3]: Delta CD# Input Flag

- Logic 0 = No change on CD# input (default).
- Logic 1 = Indicates that the CD# input has changed state since the last time it was monitored. A modem status interrupt will be generated if MSR interrupt is enabled (IER bit-3).

MSR[4]: CTS Input Status

CTS# pin may function as automatic hardware flow control signal input if it is enabled and selected by Auto CTS (EFR bit-7). Auto CTS flow control allows starting and stopping of local data transmissions based on the modem CTS# signal. A logic 1 on the CTS# pin will stop UART transmitter as soon as the current character has finished transmission, and a logic 0 will resume data transmission. Normally MSR bit-4 bit is the compliment of the CTS# input. However in the loopback mode, this bit is equivalent to the RTS# bit in the MCR register. The CTS# input may be used as a general purpose input when the modem interface is not used.

MSR[5]: DSR Input Status

DSR# (active high, logical 1). Normally this bit is the compliment of the DSR# input. In the loopback mode, this bit is equivalent to the DTR# bit in the MCR register. The DSR# input may be used as a general purpose input when the modem interface is not used.

MSR[6]: RI Input Status

RI# (active high, logical 1). Normally this bit is the compliment of the RI# input. In the loopback mode this bit is equivalent to bit-2 in the MCR register. The RI# input may be used as a general purpose input when the modem interface is not used.

MSR[7]: CD Input Status

CD# (active high, logical 1). Normally this bit is the compliment of the CD# input. In the loopback mode this bit is equivalent to bit-3 in the MCR register. The CD# input may be used as a general purpose input when the modem interface is not used.

4.10 Scratch Pad Register (SPR) - Read/Write

This is a 8-bit general purpose register for the user to store temporary data. The content of this register is preserved during sleep mode but becomes 0xFF (default) after a reset or a power off-on cycle.

4.11 Enhanced Mode Select Register (EMSR)

This register replaces SPR (during a Write) and is accessible only when FCTR[6] = 1.

EMSR[1:0]: Receive/Transmit FIFO Count (Write-Only)

When Scratchpad Swap (FCTR[6]) is asserted, EMSR bits 1-0 controls what mode the FIFO Level Counter is operating in.

TABLE 14: SCRATCHPAD SWAP SELECTION

FCTR[6]	EMSR[1]	EMSR[0]	Scratchpad is
0	X	X	Scratchpad
1	0	0	RX FIFO Counter Mode
1	0	1	TX FIFO Counter Mode
1	1	0	RX FIFO Counter Mode
1	1	1	Alternate RX/TX FIFO Counter Mode

During Alternate RX/TX FIFO Counter Mode, the first value read after EMSR bits 1-0 have been asserted will always be the RX FIFO Counter. The second value read will correspond with the TX FIFO Counter. The next value will be the RX FIFO Counter again, then the TX FIFO Counter and so on and so forth.

EMSR[3:2]: Reserved

EMSR[5:4]: Extended RTS Hysteresis

TABLE 15: AUTO RTS HYSTERESIS

EMSR BIT-5	EMSR BIT-4	FCTR BIT-1	FCTR BIT-0	RTS# HYSTERESIS (CHARACTERS)
0	0	0	0	0
0	0	0	1	±4
0	0	1	0	±6
0	0	1	1	±8
0	1	0	0	±8
0	1	0	1	±16
0	1	1	0	±24
0	1	1	1	±32
1	0	0	0	±40
1	0	0	1	±44
1	0	1	0	±48
1	0	1	1	±52
1	1	0	0	±12
1	1	0	1	±20
1	1	1	0	±28
1	1	1	1	±36

EMSR[7:6]: Reserved

4.12 FIFO Level Register (FLVL) - Read-Only

The FIFO Level Register replaces the Scratchpad Register (during a Read) when FCTR[6] = 1. Note that this is not identical to the FIFO Data Count Register which can be accessed when LCR = 0xBF.

FLVL[7:0]: FIFO Level Register

This register provides the FIFO counter level for the RX FIFO or the TX FIFO or both depending on EMSR[1:0]. See Table 14 for details.

4.13 Baud Rate Generator Registers (DLL and DLM) - Read/Write

The concatenation of the contents of DLM and DLL gives the 16-bit divisor value which is used to calculate the baud rate:

- Baud Rate = (Clock Frequency / 16) / Divisor

See MCR bit-7 and the baud rate table also.

4.14 Device Identification Register (DVID) - Read Only

This register contains the device ID (0x14 for XR16C854). Prior to reading this register, DLL and DLM should be set to 0x00.

4.15 Device Revision Register (DREV) - Read Only

This register contains the device revision information. For example, 0x01 means revision A. Prior to reading this register, DLL and DLM should be set to 0x00.

4.16 Trigger Level (TRG) - Write-Only

User Programmable Transmit/Receive Trigger Level Register.

TRG[7:0]: Trigger Level Register

These bits are used to program desired trigger levels when trigger Table-D is selected. FCTR bit-7 selects between programming the RX Trigger Level (a logic 0) and the TX Trigger Level (a logic 1).

4.17 FIFO Data Count Register (FC) - Read-Only

This register is accessible when LCR = 0xBF. Note that this register is not identical to the FIFO Level Count Register which is located in the general register set when FCTR bit-6 = 1 (Scratchpad Register Swap). It is suggested to read the FIFO Level Count Register at the Scratchpad Register location when FCTR bit-6 = 1. See **Table 14**.

FC[7:0]: FIFO Data Count Register

Transmit/Receive FIFO Count. Number of characters in Transmit (FCTR[7] = 1) or Receive FIFO (FCTR[7] = 0) can be read via this register.

4.18 Feature Control Register (FCTR) - Read/Write

This register controls the XR16C854 new functions that are not available in ST16C554 or ST16C654.

FCTR[1:0]: RTS Hysteresis

User selectable RTS# hysteresis levels for hardware flow control application. After reset, these bits are set to "0" to select the next trigger level for hardware flow control. See Table 15 for more details.

FCTR[2]: IrDA RX Inversion

- Logic 0 = Select RX input as encoded IrDA data (Idle state will be logic 0).
- Logic 1 = Select RX input as inverted encoded IrDA data (Idle state will be logic 1).

FCTR[3]: Auto RS-485 Direction Control

The Auto RS-485 Direction Control is not available in the XR16C854. See XR16C864. However, this bit changes the TX Ready Interrupt behavior. See **Table 3**.

FCTR[5:4]: Transmit/Receive Trigger Table Select

See Table 11 for more details.

TABLE 16: TRIGGER TABLE SELECT

FCTR BIT-5	FCTR BIT-4	TABLE
0	0	Table-A (TX/RX)
0	1	Table-B (TX/RX)
1	0	Table-C (TX/RX)
1	1	Table-D (TX/RX)

FCTR[6]: Scratchpad Swap

- Logic 0 = Scratch Pad register is selected as general read and write register. ST16C550 compatible mode.
- Logic 1 = FIFO Count register (Read-Only), Enhanced Mode Select Register (Write-Only). Number of characters in transmit or receive holding register can be read via scratch pad register when this bit is set. Enhanced Mode Select Register is selected when it is written into.

FCTR[7]: Programmable Trigger Register Select

- Logic 0 = Registers TRG and FC selected for RX.
- Logic 1 = Registers TRG and FC selected for TX.

4.19 Enhanced Feature Register (EFR) - Read/Write

Enhanced features are enabled or disabled using this register. Bit 0-3 provide single or dual consecutive character software flow control selection (see **Table 17**). When the Xon1 and Xon2 and Xoff1 and Xoff2 modes are selected, the double 8-bit words are concatenated into two sequential characters. Caution: note that whenever changing the TX or RX flow control bits, always reset all bits back to logic 0 (disable) before programming a new setting.

EFR[3:0]: Software Flow Control Select

Single character and dual sequential characters software flow control is supported. Combinations of software flow control can be selected by programming these bits.

TABLE 17: SOFTWARE FLOW CONTROL FUNCTIONS

EFR BIT-3 CONT-3	EFR BIT-2 CONT-2	EFR BIT-1 CONT-1	EFR BIT-0 CONT-0	TRANSMIT AND RECEIVE SOFTWARE FLOW CONTROL
0	0	0	0	No TX and RX flow control (default and reset)
0	0	X	X	No transmit flow control
1	0	X	X	Transmit Xon1, Xoff1
0	1	X	X	Transmit Xon2, Xoff2
1	1	X	X	Transmit Xon1 and Xon2, Xoff1 and Xoff2
X	X	0	0	No receive flow control
X	X	1	0	Receiver compares Xon1, Xoff1
X	X	0	1	Receiver compares Xon2, Xoff2
1	0	1	1	Transmit Xon1, Xoff1 Receiver compares Xon1 or Xon2, Xoff1 or Xoff2
0	1	1	1	Transmit Xon2, Xoff2 Receiver compares Xon1 or Xon2, Xoff1 or Xoff2
1	1	1	1	Transmit Xon1 and Xon2, Xoff1 and Xoff2, Receiver compares Xon1 and Xon2, Xoff1 and Xoff2
0	0	1	1	No transmit flow control, Receiver compares Xon1 and Xon2, Xoff1 and Xoff2

EFR[4]: Enhanced Function Bits Enable

Enhanced function control bit. This bit enables IER bits 4-7, ISR bits 4-5, FCR bits 4-5, and MCR bits 5-7 to be modified. After modifying any enhanced bits, EFR bit-4 can be set to a logic 0 to latch the new values. This feature prevents legacy software from altering or overwriting the enhanced functions once set. Normally, it is recommended to leave it enabled, logic 1.

- Logic 0 = modification disable/latch enhanced features. IER bits 4-7, ISR bits 4-5, FCR bits 4-5, and MCR bits 5-7 are saved to retain the user settings. After a reset, the IER bits 4-7, ISR bits 4-5, FCR bits 4-5, and MCR bits 5-7are set to a logic 0 to be compatible with ST16C550 mode (default).
- Logic 1 = Enables the above-mentioned register bits to be modified by the user.

EFR[5]: Special Character Detect Enable

- Logic 0 = Special Character Detect Disabled (default).
- Logic 1 = Special Character Detect Enabled. The UART compares each incoming receive character with data in Xoff-2 register. If a match exists, the receive data will be transferred to FIFO and ISR bit-4 will be set to indicate detection of the special character. Bit-0 corresponds with the LSB bit of the receive character. If flow control is set for comparing Xon1, Xoff1 (EFR [1:0]= ‘10’) then flow control <u>and</u> special character work normally. However, if flow control is set for comparing Xon2, Xoff2 (EFR[1:0]= ‘01’) then flow control works normally, but Xoff2 will <u>not</u> go to the FIFO, and will generate an Xoff interrupt <u>and</u> a special character interrupt, if enabled via IER bit-5.

EFR[6]: Auto RTS Flow Control Enable

RTS# output may be used for hardware flow control by setting EFR bit-6 to logic 1. When Auto RTS is selected, an interrupt will be generated when the receive FIFO is filled to the programmed trigger level and RTS de-asserts to a logic 1 at the next upper trigger level/hysteresis level. RTS# will return to a logic 0 when FIFO data falls below the next lower trigger level/hysteresis level. The RTS# output must be asserted (logic 0) before the auto RTS can take effect. RTS# pin will function as a general purpose output when hardware flow control is disabled.

- Logic 0 = Automatic RTS flow control is disabled (default).
- Logic 1 = Enable Automatic RTS flow control.

EFR[7]: Auto CTS Flow Control Enable

Automatic CTS Flow Control.

- Logic 0 = Automatic CTS flow control is disabled (default).
- Logic 1 = Enable Automatic CTS flow control. Data transmission stops when CTS# input de-asserts to logic 1. Data transmission resumes when CTS# returns to a logic 0.

4.20 Software Flow Control Registers (XOFF1, XOFF2, XON1, XON2) - Read/Write

These registers are used as the programmable software flow control characters xoff1, xoff2, xon1, and xon2. For more details, see Table 7.

4.21 FIFO Status Register (FSTAT) - Read/Write

This register is applicable only to the 100 pin QFP XR16C854. The FIFO Status Register provides a status indication for each of the transmit and receive FIFO. These status bits contain the inverted logic states of the TXRDY# A-D outputs and the (un-inverted) logic states of the RXRDY# A-D outputs. The contents of the FSTAT register are placed on the data bus when the FSRS# pin (pin 76) is a logic 0. Also see FSRS# pin description.

FSTAT[3:0]: TXRDY# A-D Status Bits

Please see Table 5 for the interpretation of the TXRDY# signals.

FSTAT[7:4]: RXRDY# A-D Status Bits

Please see Table 5 for the interpretation of the RXRDY# signals.

TABLE 18: UART RESET CONDITIONS FOR CHANNELS A-D

REGISTERS	RESET STATE
DLL	Bits 7-0 = 0xXX
DLM	Bits 7-0 = 0xXX
RHR	Bits 7-0 = 0xXX
THR	Bits 7-0 = 0xXX
IER	Bits 7-0 = 0x00
FCR	Bits 7-0 = 0x00
ISR	Bits 7-0 = 0x01
LCR	Bits 7-0 = 0x00
MCR	Bits 7-0 = 0x00
LSR	Bits 7-0 = 0x60
MSR	Bits 3-0 = Logic 0 Bits 7-4 = Logic levels of the inputs inverted
SPR	Bits 7-0 = 0xFF
EMSR	Bits 7-0 = 0x00
FLVL	Bits 7-0 = 0x00
TRG	Bits 7-0 = 0x00
FC	Bits 7-0 = 0x00
FCTR	Bits 7-0 = 0x00
EFR	Bits 7-0 = 0x00
XON1	Bits 7-0 = 0x00
XON2	Bits 7-0 = 0x00
XOFF1	Bits 7-0 = 0x00
XOFF2	Bits 7-0 = 0x00
FSTAT	Bits 7-0 = 0xFF
I/O SIGNALS	**RESET STATE**
TX	Logic 1
IRTX	Logic 0
RTS#	Logic 1
DTR#	Logic 1
RXRDY#	Logic 1
TXRDY#	Logic 0
INT	XR16C854 = Three-State Condition XR16C854D = Logic 0
IRQ#	Logic 1 (68 mode, INTSEL = 0)

ELECTRICAL CHARACTERISTICS

ABSOLUTE MAXIMUM RATINGS

Power Supply Range	7 Volts
Voltage at Any Pin	GND-0.3 V to 7 V
Operating Temperature	-40° to +85°C
Storage Temperature	-65° to +150°C
Package Dissipation	500 mW

TYPICAL PACKAGE THERMAL RESISTANCE DATA (MARGIN OF ERROR: = 15%)

Thermal Resistance (64-LQFP)	theta-ja = 49°C/W, theta-jc = 10°C/W
Thermal Resistance (68-PLCC)	theta-ja = 39°C/W, theta-jc = 17°C/W
Thermal Resistance (100-QFP)	theta-ja = 45°C/W, theta-jc = 12°C/W

DC ELECTRICAL CHARACTERISTICS

TA=0O TO 70OC (-40O TO +85OC FOR INDUSTRIAL GRADE PACKAGE), VCC IS 2.97 TO 5.5V

SYMBOL	PARAMETER	LIMITS 3.3V		LIMITS 5.0V		UNITS	CONDITIONS
		MIN	MAX	MIN	MAX		
V_{ILCK}	Clock Input Low Level	-0.3	0.6	-0.5	0.6	V	
V_{IHCK}	Clock Input High Level	2.4	VCC	3.0	VCC	V	
V_{IL}	Input Low Voltage	-0.3	0.8	-0.5	0.8	V	
V_{IH}	Input High Voltage (For devices with top mark date code of "DC YYWW" and older)	2.0	VCC	2.2	VCC	V	
V_{IH}	Input High Voltage (For devices with top mark date code of "F2 YYWW" and newer)	2.0	5.5	2.2	5.5	V	
V_{OL}	Output Low Voltage		0.4		0.4	V	I_{OL} = 6 mA I_{OL} = 4 mA
V_{OH}	Output High Voltage	2.0		2.4		V	I_{OH} = -6 mA I_{OH} = -1 mA
I_{IL}	Input Low Leakage Current		±10		±10	uA	
I_{IH}	Input High Leakage Current		±10		±10	uA	
C_{IN}	Input Pin Capacitance		5		5	pF	
I_{CC}	Power Supply Current		3		6	mA	
I_{SLEEP}	Sleep Current		100		200	uA	See Test 1

Test 1: The following inputs remain steady at VCC or GND state to minimize Sleep current: A0-A2, D0-D7, IOR#, IOW#, CSA#, CSB#, CSC#, and CSD#. Also, RXA, RXB, RXC, and RXD inputs idle at logic 1 state while asleep.

AC ELECTRICAL CHARACTERISTICS

TA=0° TO 70°C (-40° TO +85°C FOR INDUSTRIAL GRADE PACKAGE), VCC IS 2.97 TO 5.5V

SYMBOL	PARAMETER	LIMITS 3.3		LIMITS 5.0		UNIT	CONDITIONS
		MIN	MAX	MIN	MAX		
CLK	Clock Pulse Duration	20		15		ns	
OSC	Oscillator Frequency		8		24	MHz	
OSC	External Clock Frequency		24		32	MHz	
TAS	Address Setup Time (16 Mode)	10		5		ns	
TAH	Address Hold Time (16 Mode)	10		5		ns	
TCS	Chip Select Width (16 Mode)	66		50		ns	
TRD	IOR# Strobe Width (16 Mode)	35		25		ns	
TDY	Read Cycle Delay (16 Mode)	40		30		ns	
TRDV	Data Access Time (16 Mode)		35		25	ns	
TDD	Data Disable Time (16 Mode)	0	25	0	15	ns	
TWR	IOW# Strobe Width (16 Mode)	35		25		ns	
TDY	Write Cycle Delay (16 Mode)	40		30		ns	
TDS	Data Setup Time (16 Mode)	10		5		ns	
TDH	Data Hold Time (16 Mode)	10		5		ns	
T_{ADS}	Address Setup (68 Mode)	10		10		ns	
T_{ADH}	Address Hold (68 Mode)	15		15		ns	
TRWS	R/W# Setup to CS# (68 Mode)	10		5		ns	
T_{RDA}	Read Data Access (68 mode)	15		15		ns	
TRDH	Read Data Hold (68 mode)	15		15		ns	
T_{WDS}	Write Data Setup (68 mode)	20		15		ns	
T_{WDH}	Write Data Hold (68 Mode)	10		10		ns	
TRWH	CS# De-asserted to R/W# De-asserted (68 Mode)	10		10		ns	
TCSL	CS# Strobe Width (68 Mode)	40		40		ns	
TCSD	CS# Cycle Delay (68 Mode)	70		70		ns	
TWDO	Delay From IOW# To Output		50		40	ns	100 pF load
TMOD	Delay To Set Interrupt From MODEM Input		40		35	ns	100 pF load
TRSI	Delay To Reset Interrupt From IOR#		40		35	ns	100 pF load
TSSI	Delay From Stop To Set Interrupt		1		1	Bclk	
TRRI	Delay From IOR# To Reset Interrupt		40		40	ns	100 pF load

AC ELECTRICAL CHARACTERISTICS

TA=0° TO 70°C (-40° TO +85°C FOR INDUSTRIAL GRADE PACKAGE), VCC IS 2.97 TO 5.5V

SYMBOL	PARAMETER	LIMITS 3.3 MIN	LIMITS 3.3 MAX	LIMITS 5.0 MIN	LIMITS 5.0 MAX	UNIT	CONDITIONS
TSI	Delay From Stop To Interrupt		45		40	ns	
TINT	Delay From Initial INT Reset To Transmit Start	8	24	8	24	Bclk	
TWRI	Delay From IOW# To Reset Interrupt		45		40	ns	
TSSR	Delay From Stop To Set RXRDY#		1		1	Bclk	
TRR	Delay From IOR# To Reset RXRDY#		45		40	ns	
TWT	Delay From IOW# To Set TXRDY#		45		40	ns	
TSRT	Delay From Center of Start To Reset TXRDY#		8		8	Bclk	
TRST	Reset Pulse Width	40		40		ns	
N	Baud Rate Divisor	1	2^{16}-1	1	2^{16}-1	-	
Bclk	Baud Clock	16X of data rate				bps	

FIGURE 14. CLOCK TIMING

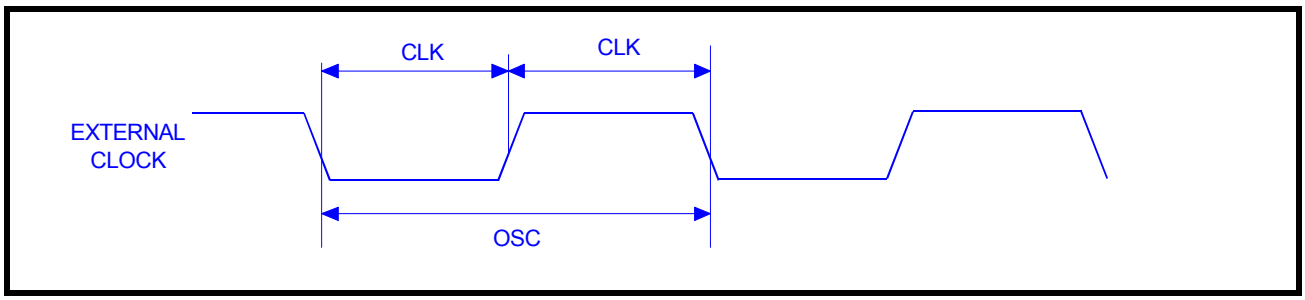

FIGURE 15. MODEM INPUT/OUTPUT TIMING FOR CHANNELS A-D

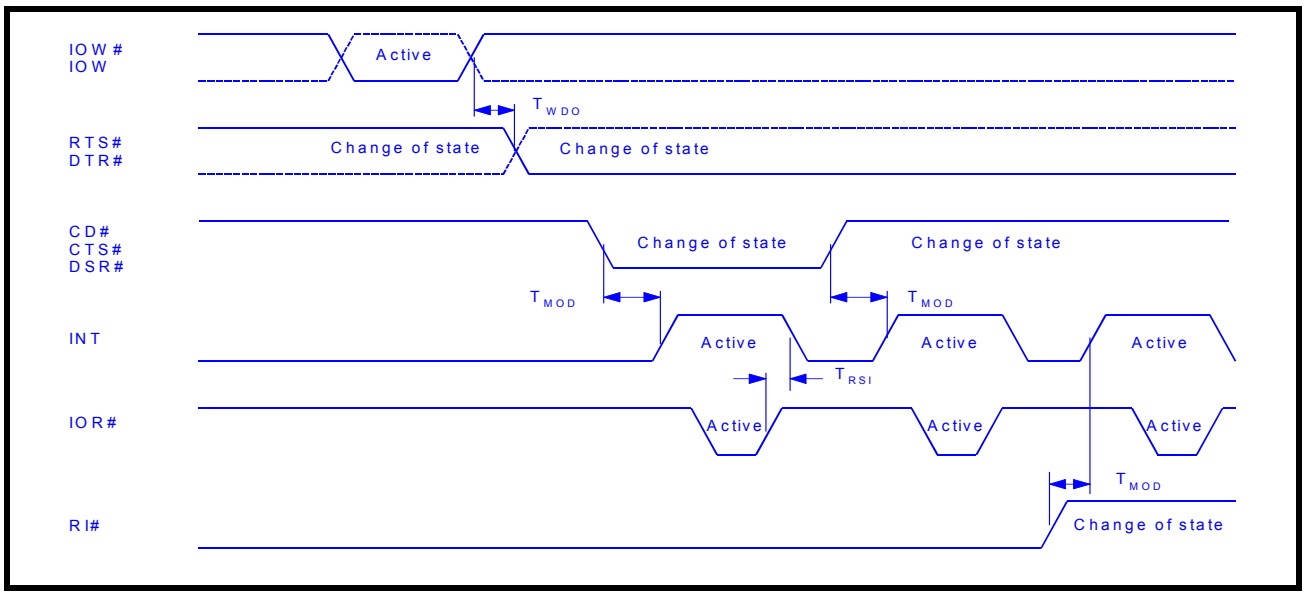

FIGURE 16. 16 MODE (INTEL) DATA BUS READ TIMING FOR CHANNELS A-D

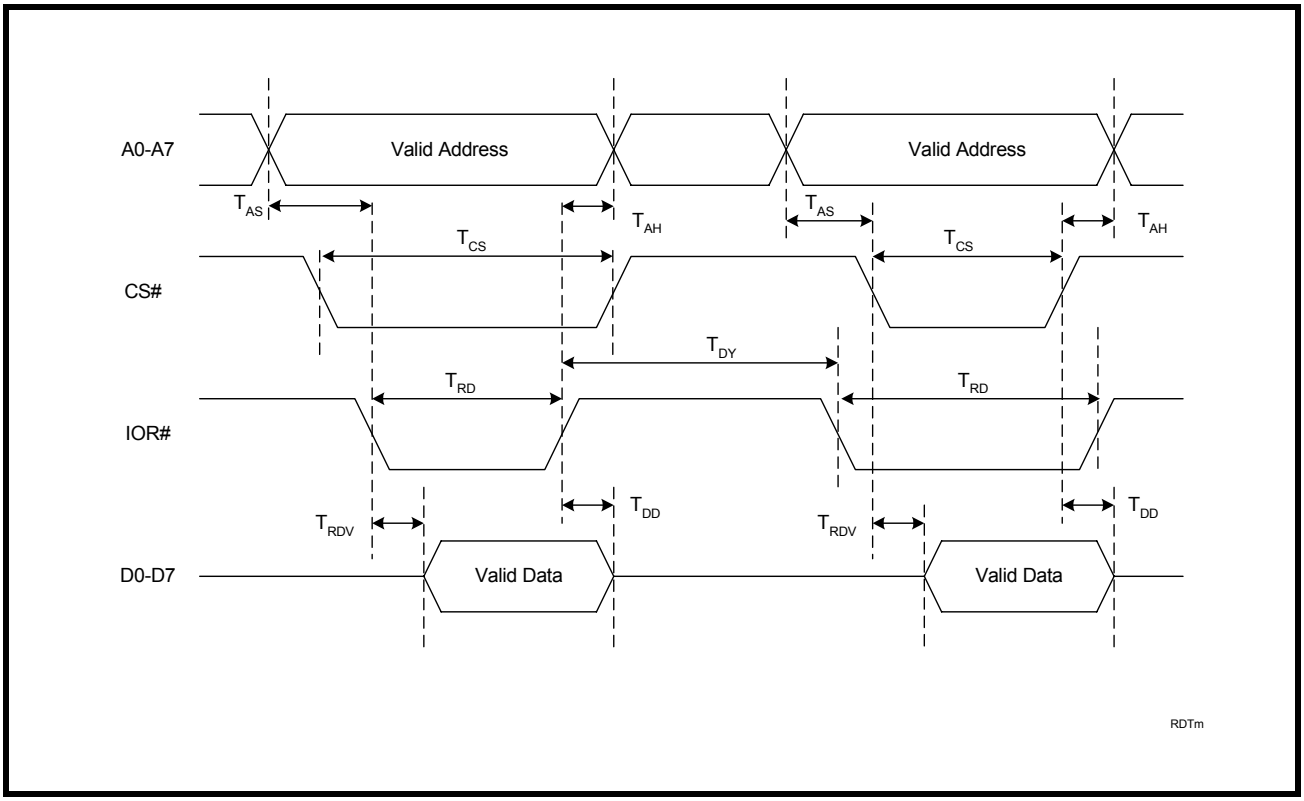

FIGURE 17. 16 MODE (INTEL) DATA BUS WRITE TIMING FOR CHANNELS A-D

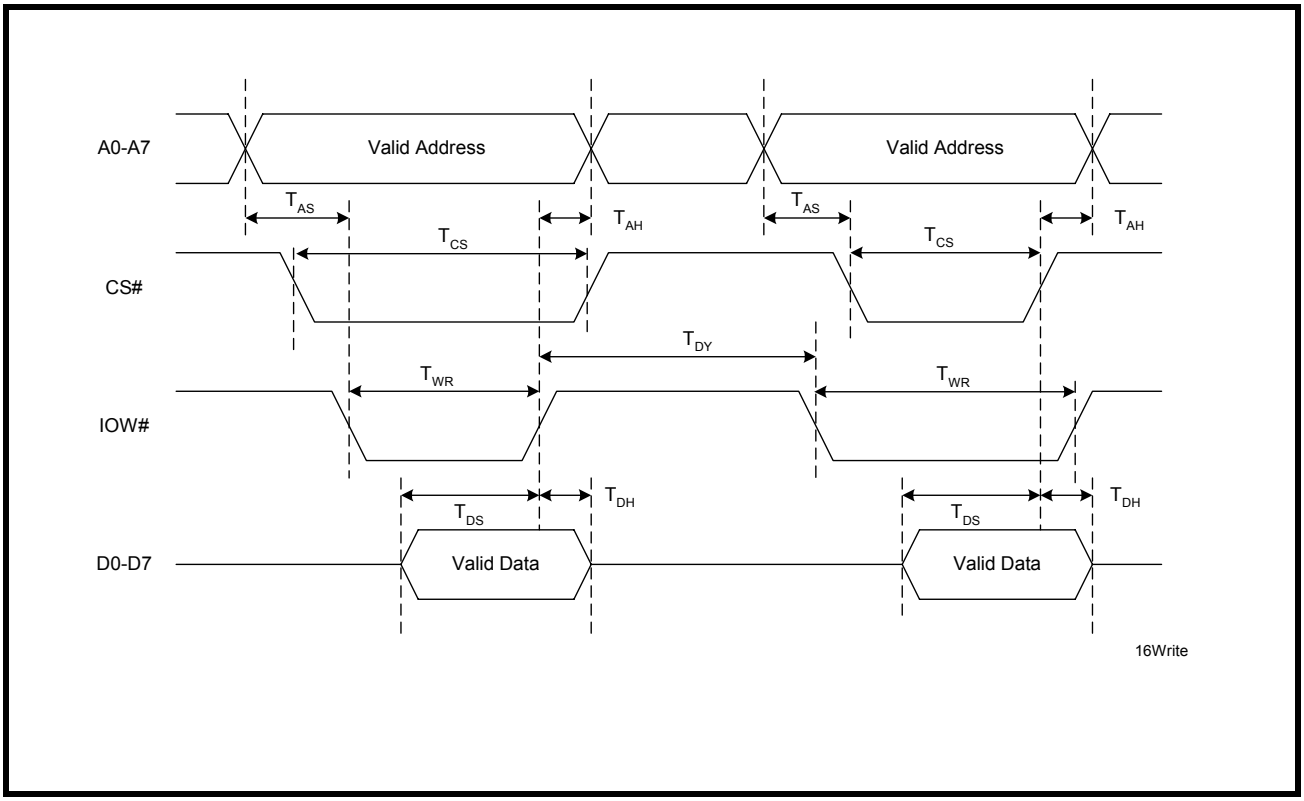

FIGURE 18. 68 MODE (MOTOROLA) DATA BUS READ TIMING FOR CHANNELS A-D

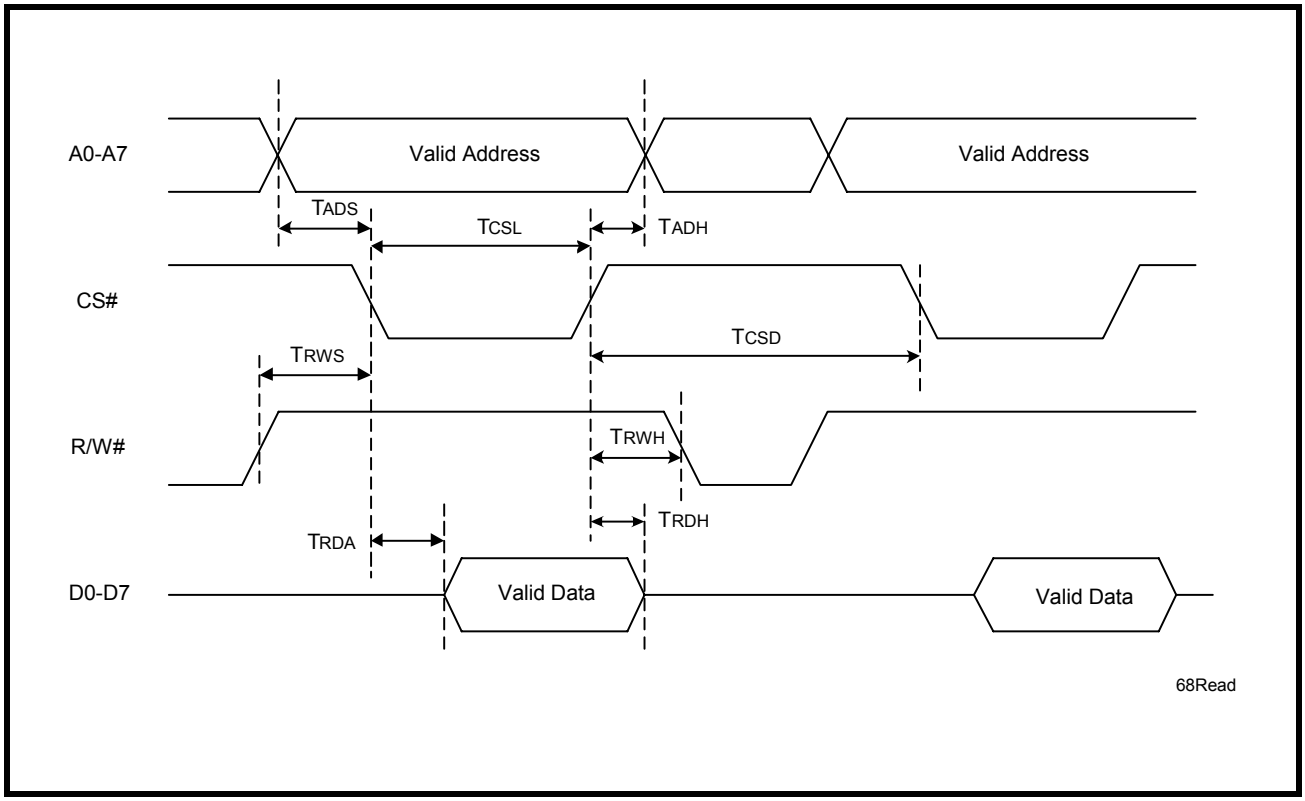

FIGURE 19. 68 MODE (MOTOROLA) DATA BUS WRITE TIMING FOR CHANNELS A-D

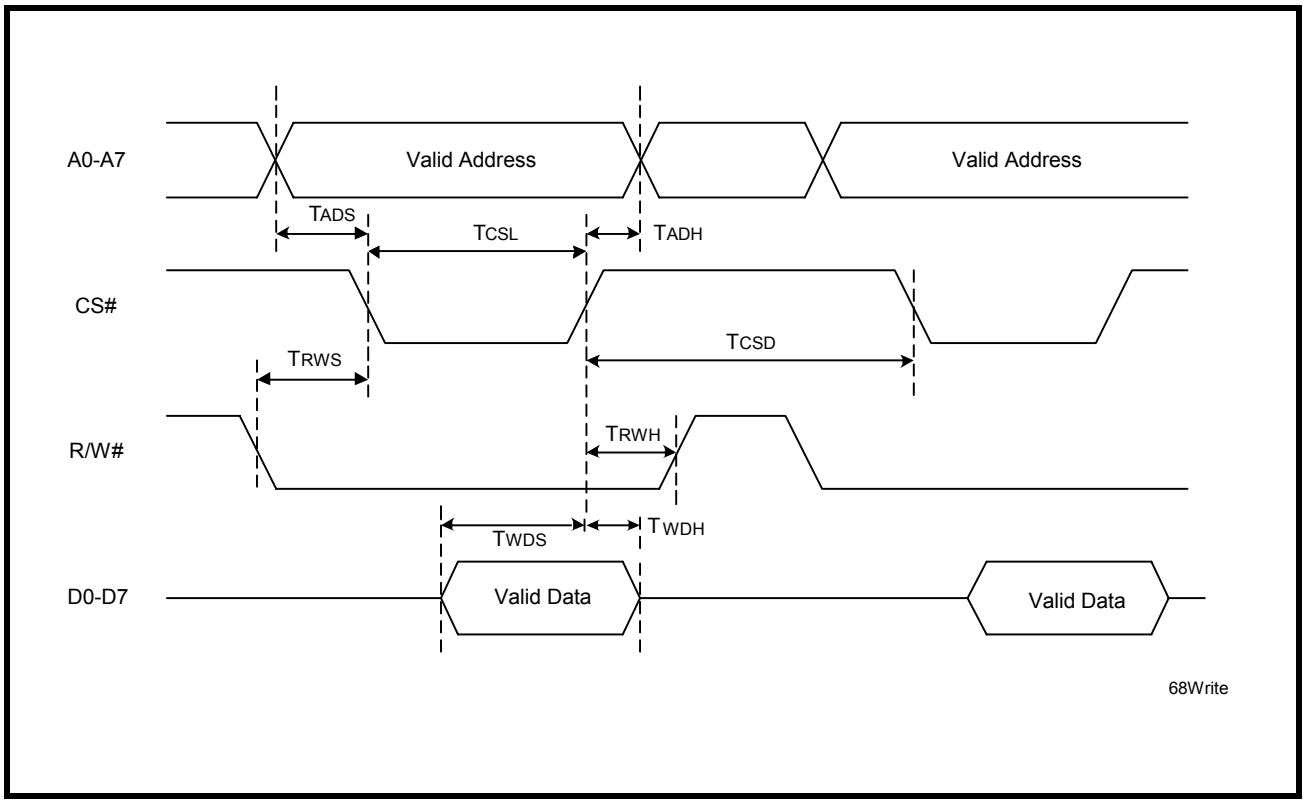

FIGURE 20. RECEIVE READY & INTERRUPT TIMING [NON-FIFO MODE] FOR CHANNELS A-D

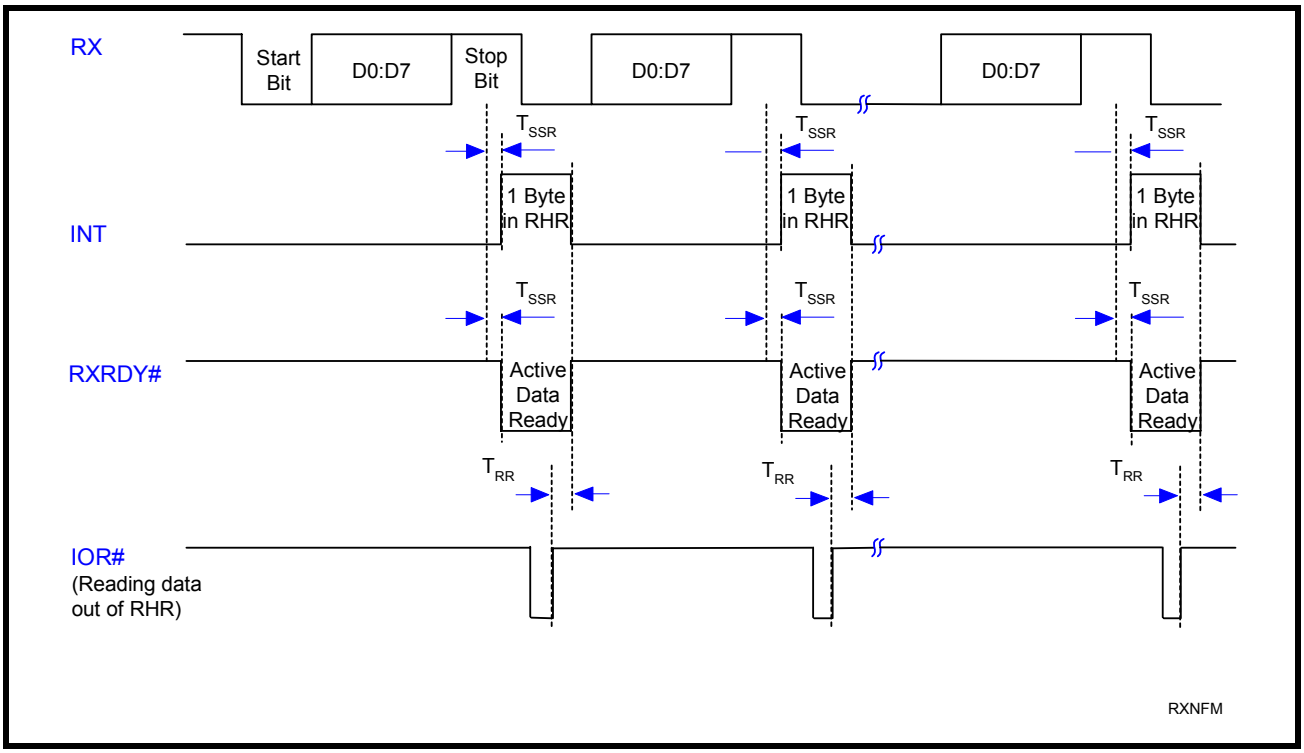

FIGURE 21. TRANSMIT READY & INTERRUPT TIMING [NON-FIFO MODE] FOR CHANNELS A-D

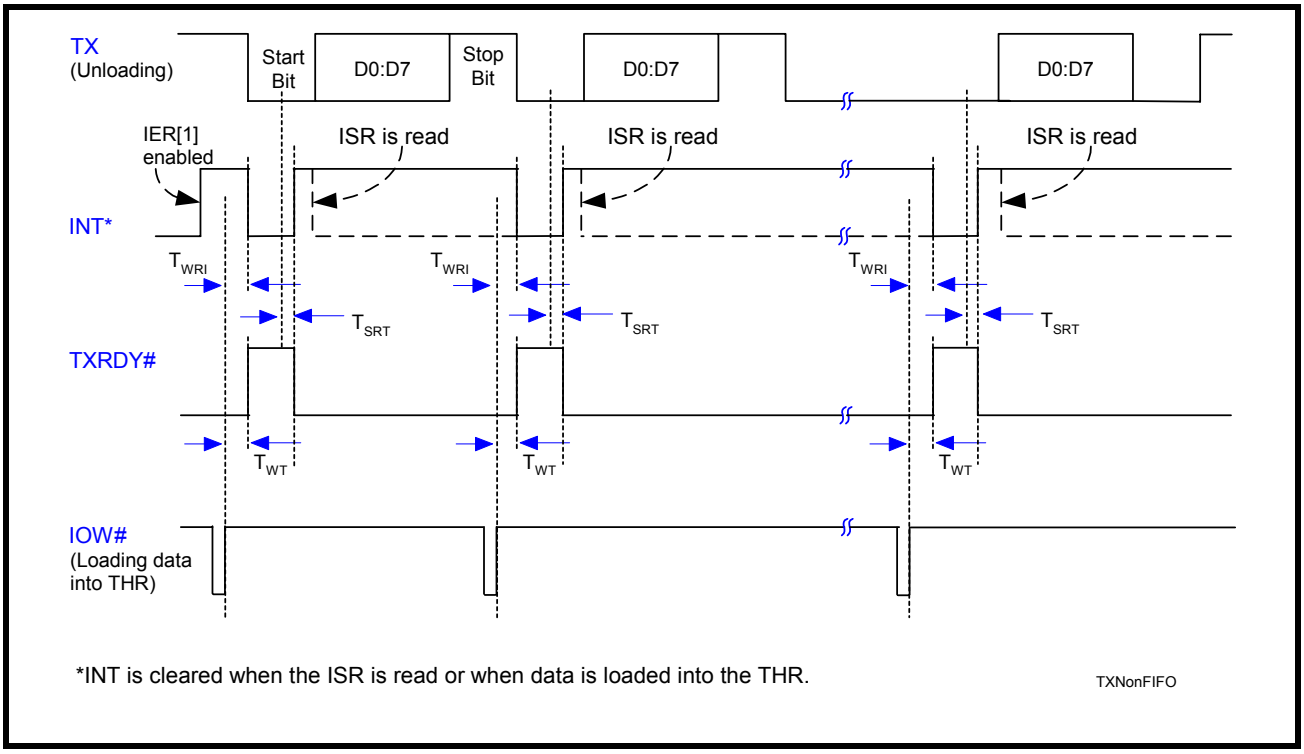

FIGURE 22. RECEIVE READY & INTERRUPT TIMING [FIFO MODE, DMA DISABLED] FOR CHANNELS A-D

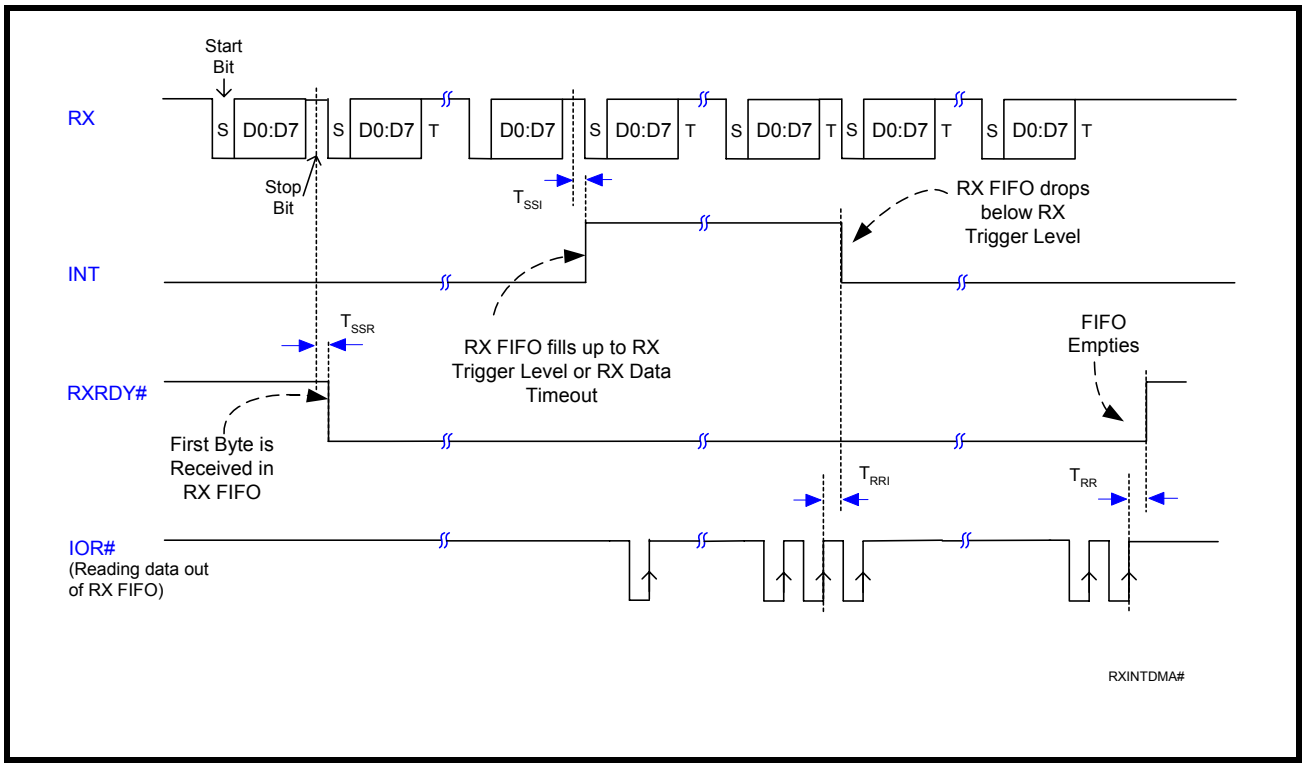

FIGURE 23. RECEIVE READY & INTERRUPT TIMING [FIFO MODE, DMA ENABLED] FOR CHANNELS A-D

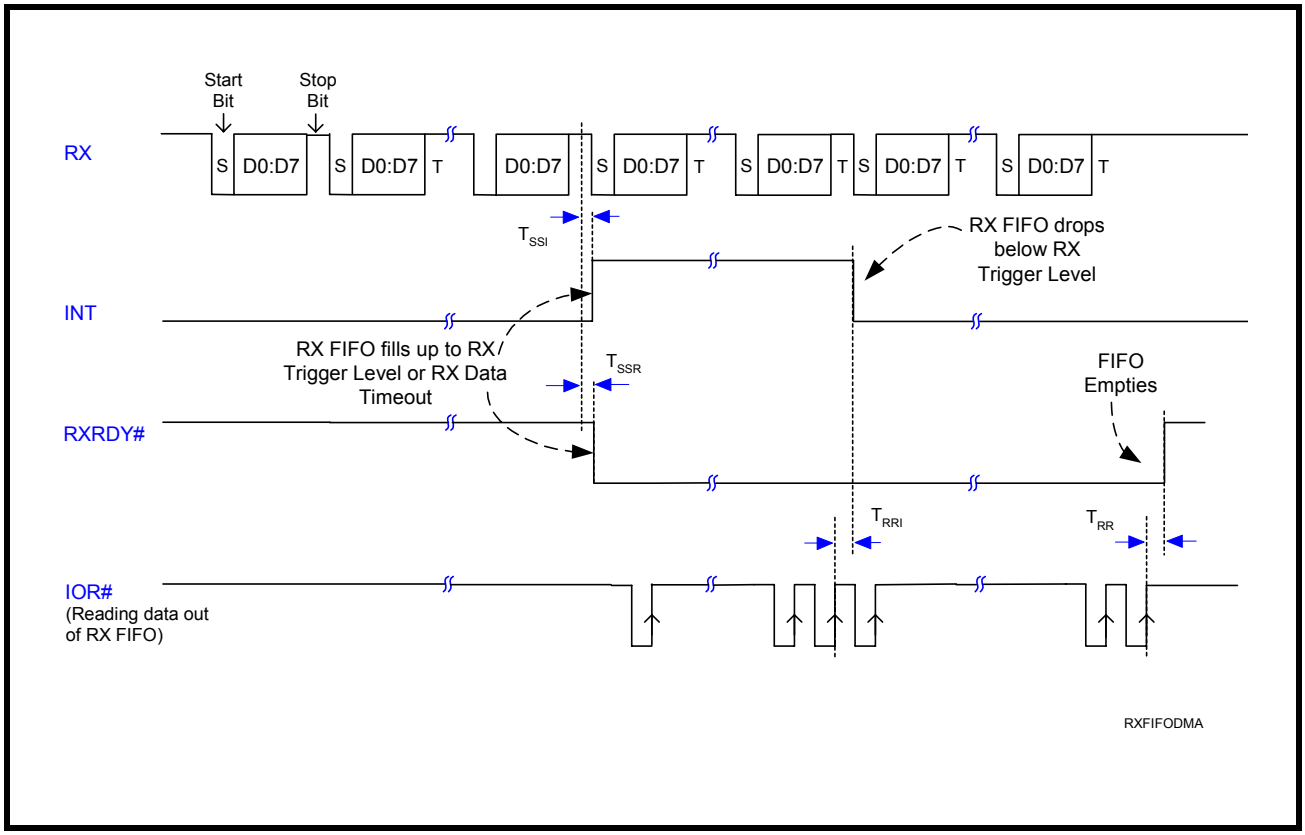

FIGURE 24. TRANSMIT READY & INTERRUPT TIMING [FIFO MODE, DMA MODE DISABLED] FOR CHANNELS A-D

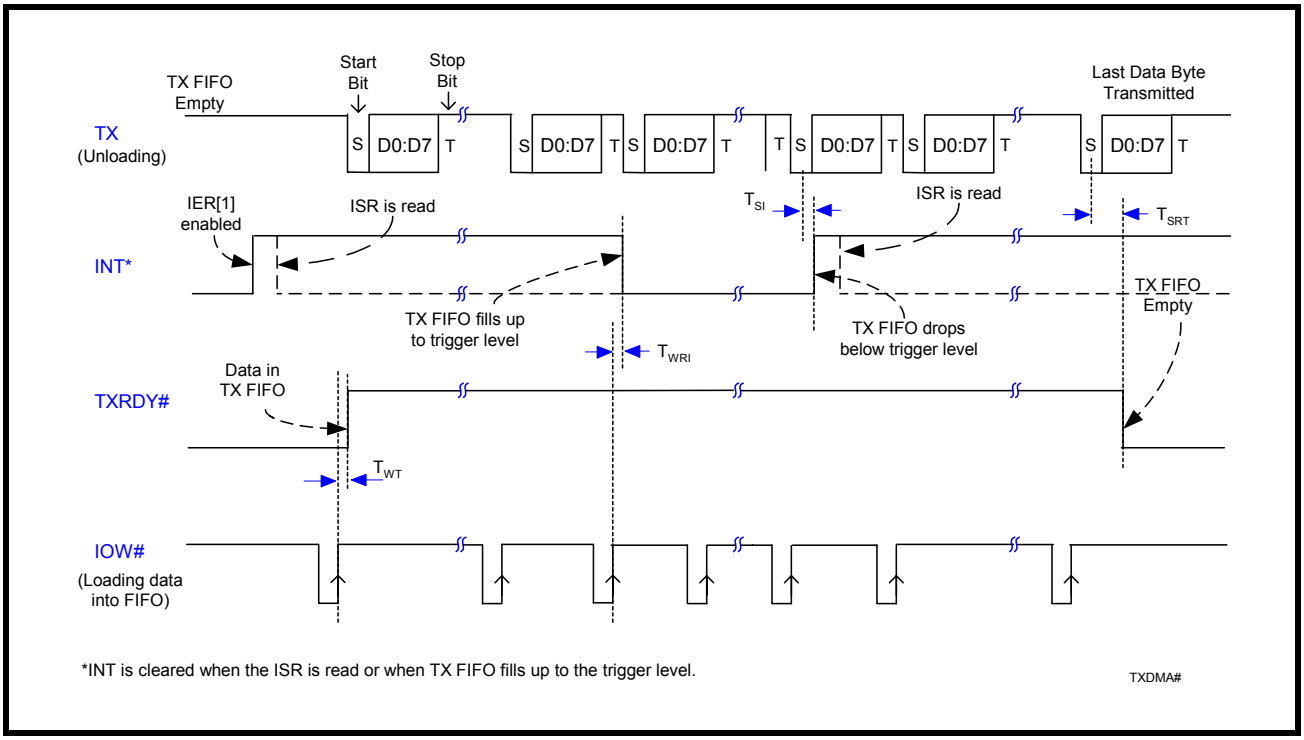

PACKAGE DIMENSIONS

64 LEAD LOW-PROFILE QUAD FLAT PACK (10 x 10 x 1.4 mm LQFP)

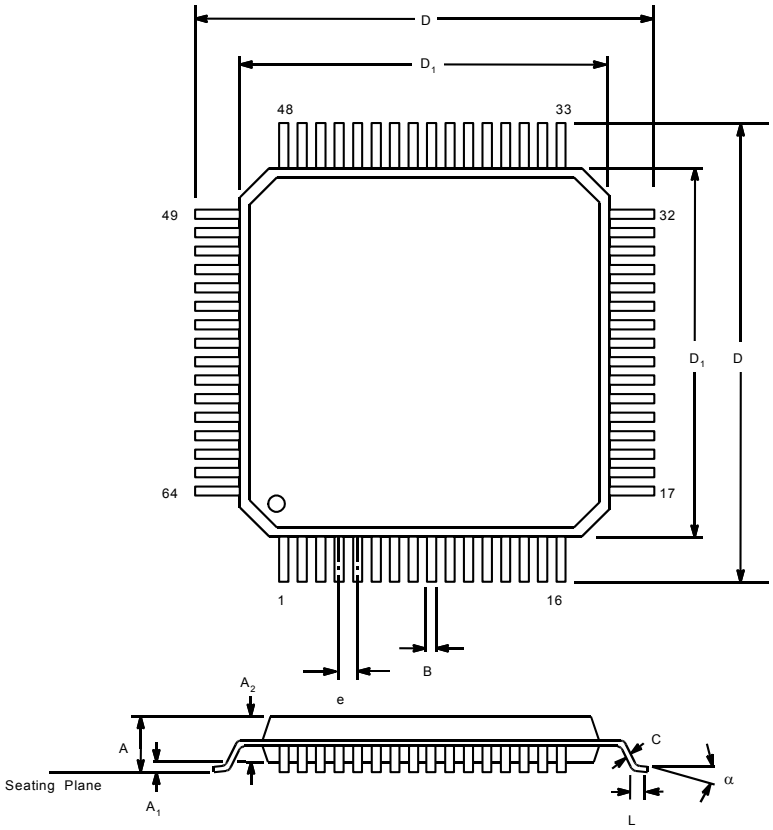

Note: The control dimension is the millimeter column

SYMBOL	INCHES		MILLIMETERS	
	MIN	MAX	MIN	MAX
A	0.055	0.063	1.40	1.60
A1	0.002	0.006	0.05	0.15
A2	0.053	0.057	1.35	1.45
B	0.007	0.011	0.17	0.27
C	0.004	0.008	0.09	0.20
D	0.465	0.480	11.80	12.20
D1	0.390	0.398	9.90	10.10
e	0.020 BSC		0.50 BSC	
L	0.018	0.030	0.45	0.75
α	0°	7°	0°	7°

68 LEAD PLASTIC LEADED CHIP CARRIER (PLCC)

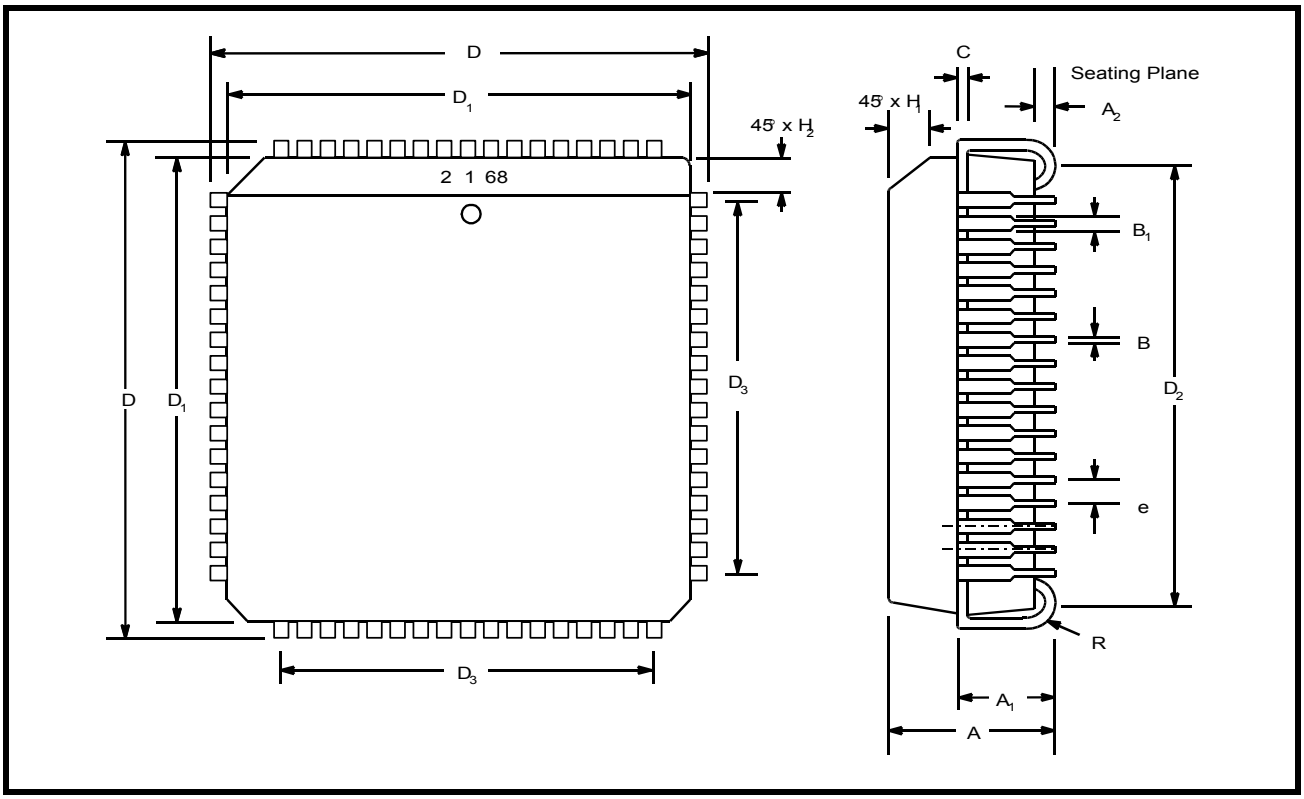

Note: The control dimension is the inch column

SYMBOL	INCHES		MILLIMETERS	
	MIN	MAX	MIN	MAX
A	0.165	0.200	4.19	5.08
A1	0.090	0.130	2.29	3.30
A2	0.020	---.	0.51	---
B	0.013	0.021	0.33	0.53
B1	0.026	0.032	0.66	0.81
C	0.008	0.013	0.19	0.32
D	0.985	0.995	25.02	25.27
D1	0.950	0.958	24.13	24.33
D2	0.890	0.930	22.61	23.62
D3	0.800 typ.		20.32 typ.	
e	0.050 BSC		1.27 BSC	
H1	0.042	0.056	1.07	1.42
H2	0.042	0.048	1.07	1.22
R	0.025	0.045	0.64	1.14

100 LEAD PLASTIC QUAD FLAT PACK (14 mm x 20 mm QFP, 1.95 mm Form)

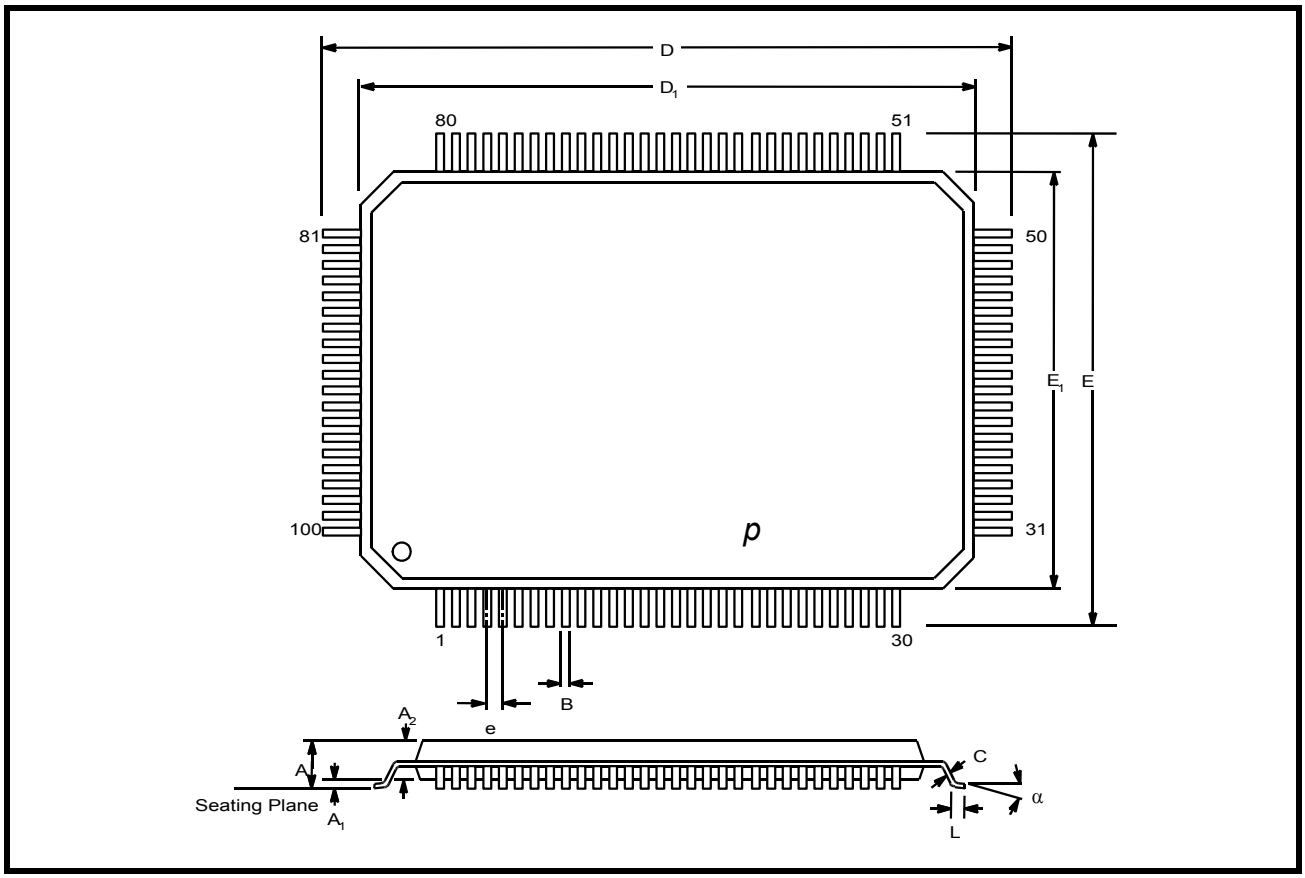

Note: The control dimension is the millimeter column

SYMBOL	INCHES		MILLIMETERS	
	MIN	MAX	MIN	MAX
A	0.102	0.134	2.60	3.40
A1	0.002	0.014	0.05	0.35
A2	0.100	0.120	2.55	3.05
B	0.009	0.015	0.22	0.38
C	0.004	0.009	0.11	0.23
D	0.931	0.951	23.65	24.15
D1	0.783	0.791	19.90	20.10
E	0.695	0.715	17.65	18.15
E1	0.547	0.555	13.90	14.10
e	0.0256 BSC		0.65 BSC	
L	0.029	0.040	0.73	1.03
α	0°	7°	0°	7°

REVISION HISTORY

DATE	REVISION	DESCRIPTION
November 1999	Rev 1.0	Removed Preliminary designation.
February 2002	Rev 2.0	Changed to standard style format. Text descriptions were clarified and simplified (eg. DMA operation, FIFO mode vs. Non-FIFO mode operations etc). Corrected RTS Hysteresis character values in Table 15. Clarified timing diagrams. Renamed Rclk (Receive Clock) to Bclk (Baud Clock) and timing symbols. Added T_{CS}, T_{RWS} and T_{RST}.
May 2003	Rev 2.1	Added patent number and updated Block Diagram.
June 2003	Rev 2.2	Added and updated device status in Ordering Information.
January 2004	Rev 3.0	Changed to standard style format. Clarified sleep mode conditions. Devices with top mark date code of "F2 YYWW" and newer have 5V tolerant inputs (except for XTAL1). Devices with top mark date code of "DC YYWW" and older do not have 5V tolerant inputs.
August 2005	Rev 3.0.1	Updated the 1.4mm-thick Quad Flat Pack package description from "TQFP" to "LQFP" to be consistent with the JEDEC and Industry norms.

NOTICE

EXAR Corporation reserves the right to make changes to the products contained in this publication in order to improve design, performance or reliability. EXAR Corporation assumes no responsibility for the use of any circuits described herein, conveys no license under any patent or other right, and makes no representation that the circuits are free of patent infringement. Charts and schedules contained here in are only for illustration purposes and may vary depending upon a user's specific application. While the information in this publication has been carefully checked; no responsibility, however, is assumed for inaccuracies.

EXAR Corporation does not recommend the use of any of its products in life support applications where the failure or malfunction of the product can reasonably be expected to cause failure of the life support system or to significantly affect its safety or effectiveness. Products are not authorized for use in such applications unless EXAR Corporation receives, in writing, assurances to its satisfaction that: (a) the risk of injury or damage has been minimized; (b) the user assumes all such risks; (c) potential liability of EXAR Corporation is adequately protected under the circumstances.

Copyright 2005 EXAR Corporation

Datasheet August 2005.

Reproduction, in part or whole, without the prior written consent of EXAR Corporation is prohibited.

TABLE OF CONTENTS

GENERAL DESCRIPTION 1
FEATURES 1
APPLICATIONS 1
FIGURE 1. XR16C854 BLOCK DIAGRAM 1
FIGURE 2. PIN OUT ASSIGNMENT FOR 100-PIN QFP PACKAGES IN 16 AND 68 MODE 2
FIGURE 3. PIN OUT ASSIGNMENT FOR PLCC PACKAGES IN 16 AND 68 MODE AND LQFP PACKAGES 3
ORDERING INFORMATION 3
PIN DESCRIPTIONS 4
1.0 PRODUCT DESCRIPTION 9
2.0 FUNCTIONAL DESCRIPTIONS 10
2.1 CPU INTERFACE 10
FIGURE 4. XR16C854/854D TYPICAL INTEL/MOTOROLA DATA BUS INTERCONNECTIONS 10
2.2 5-VOLT TOLERANT INPUTS 11
2.3 DEVICE RESET 11
2.4 DEVICE IDENTIFICATION AND REVISION 11
2.5 CHANNEL SELECTION 11
TABLE 1: CHANNEL A-D SELECT IN 16 MODE 11
TABLE 2: CHANNEL A-D SELECT IN 68 MODE 11
2.6 CHANNELS A-D INTERNAL REGISTERS 12
2.7 INT OUPUTS FOR CHANNELS A-D 12
TABLE 3: INT PINS OPERATION FOR TRANSMITTER FOR CHANNELS A-D 12
TABLE 4: INT PIN OPERATION FOR RECEIVER FOR CHANNELS A-D 12
2.8 DMA MODE 12
TABLE 5: TXRDY# AND RXRDY# OUTPUTS IN FIFO AND DMA MODE FOR CHANNELS A-D 13
2.9 CRYSTAL OSCILLATOR OR EXTERNAL CLOCK INPUT 13
FIGURE 5. TYPICAL OSCILATOR CONNECTIONSL 13
2.10 PROGRAMMABLE BAUD RATE GENERATOR 13
FIGURE 6. BAUD RATE GENERATOR AND PRESCALER 14
TABLE 6: TYPICAL DATA RATES WITH A 14.7456 MHZ CRYSTAL OR EXTERNAL CLOCK 14
2.11 TRANSMITTER 14
2.11.1 TRANSMIT HOLDING REGISTER (THR) - WRITE ONLY 14
2.11.2 TRANSMITTER OPERATION IN NON-FIFO MODE 14
FIGURE 7. TRANSMITTER OPERATION IN NON-FIFO MODE 15
2.11.3 TRANSMITTER OPERATION IN FIFO MODE 15
FIGURE 8. TRANSMITTER OPERATION IN FIFO AND FLOW CONTROL MODE 15
2.12 RECEIVER 15
2.12.1 RECEIVE HOLDING REGISTER (RHR) - READ-ONLY 16
FIGURE 9. RECEIVER OPERATION IN NON-FIFO MODE 16
FIGURE 10. RECEIVER OPERATION IN FIFO AND AUTO RTS FLOW CONTROL MODE 16
2.13 AUTO RTS HARDWARE FLOW CONTROL 17
2.14 AUTO RTS HYSTERESIS 17
2.15 AUTO CTS FLOW CONTROL 17
FIGURE 11. AUTO RTS AND CTS FLOW CONTROL OPERATION 18
2.16 AUTO XON/XOFF (SOFTWARE) FLOW CONTROL 19
TABLE 7: AUTO XON/XOFF (SOFTWARE) FLOW CONTROL 19
2.17 SPECIAL CHARACTER DETECT 19
2.18 INFRARED MODE 19
FIGURE 12. INFRARED TRANSMIT DATA ENCODING AND RECEIVE DATA DECODING 20
2.19 SLEEP MODE WITH AUTO WAKE-UP 20
2.20 INTERNAL LOOPBACK 21
FIGURE 13. INTERNAL LOOP BACK IN CHANNELS A-D 22
3.0 UART INTERNAL REGISTERS 23
TABLE 8: UART CHANNEL A AND B UART INTERNAL REGISTERS 23
TABLE 9: INTERNAL REGISTERS DESCRIPTION. SHADED BITS ARE ENABLED WHEN EFR BIT-4=1 24
4.0 INTERNAL REGISTER DESCRIPTIONS 26
4.1 RECEIVE HOLDING REGISTER (RHR) - READ- ONLY 26
4.2 TRANSMIT HOLDING REGISTER (THR) - WRITE-ONLY 26
4.3 INTERRUPT ENABLE REGISTER (IER) - READ/WRITE 26
4.3.1 IER VERSUS RECEIVE FIFO INTERRUPT MODE OPERATION 26

4.3.2 IER VERSUS RECEIVE/TRANSMIT FIFO POLLED MODE OPERATION 26
4.4 INTERRUPT STATUS REGISTER (ISR) - READ-ONLY 27
4.4.1 INTERRUPT GENERATION: 27
4.4.2 INTERRUPT CLEARING: 27
TABLE 10: INTERRUPT SOURCE AND PRIORITY LEVEL 28
4.5 FIFO CONTROL REGISTER (FCR) - WRITE-ONLY 28
TABLE 11: TRANSMIT AND RECEIVE FIFO TRIGGER LEVEL SELECTION 29
4.6 LINE CONTROL REGISTER (LCR) - READ/WRITE 30
TABLE 12: PARITY SELECTION 31
4.7 MODEM CONTROL REGISTER (MCR) OR GENERAL PURPOSE OUTPUTS CONTROL - READ/WRITE 32
TABLE 13: INT OUTPUT MODES 32
4.8 LINE STATUS REGISTER (LSR) - READ ONLY 33
4.9 MODEM STATUS REGISTER (MSR) - READ ONLY 34
4.10 SCRATCH PAD REGISTER (SPR) - READ/WRITE 35
4.11 ENHANCED MODE SELECT REGISTER (EMSR) 35
TABLE 14: SCRATCHPAD SWAP SELECTION 35
TABLE 15: AUTO RTS HYSTERESIS 36
4.12 FIFO LEVEL REGISTER (FLVL) - READ-ONLY 36
4.13 BAUD RATE GENERATOR REGISTERS (DLL AND DLM) - READ/WRITE 36
4.14 DEVICE IDENTIFICATION REGISTER (DVID) - READ ONLY 36
4.15 DEVICE REVISION REGISTER (DREV) - READ ONLY 36
4.16 TRIGGER LEVEL (TRG) - WRITE-ONLY 36
4.17 FIFO DATA COUNT REGISTER (FC) - READ-ONLY 37
4.18 FEATURE CONTROL REGISTER (FCTR) - READ/WRITE 37
TABLE 16: TRIGGER TABLE SELECT 37
4.19 ENHANCED FEATURE REGISTER (EFR) - READ/WRITE 37
TABLE 17: SOFTWARE FLOW CONTROL FUNCTIONS 38
4.20 SOFTWARE FLOW CONTROL REGISTERS (XOFF1, XOFF2, XON1, XON2) - READ/WRITE 39
4.21 FIFO STATUS REGISTER (FSTAT) - READ/WRITE 39
TABLE 18: UART RESET CONDITIONS FOR CHANNELS A-D 40
ABSOLUTE MAXIMUM RATINGS 41
TYPICAL PACKAGE THERMAL RESISTANCE DATA (MARGIN OF ERROR: = 15%) 41
DC ELECTRICAL CHARACTERISTICS 41
TA=0o to 70oC (-40o to +85oC for industrial grade package), Vcc is 2.97 to 5.5V 41
ELECTRICAL CHARACTERISTICS 41
AC ELECTRICAL CHARACTERISTICS 42
TA=0O TO 70OC (-40O TO +85OC FOR INDUSTRIAL GRADE PACKAGE), VCC IS 2.97 TO 5.5V 42
FIGURE 14. CLOCK TIMING 43
FIGURE 15. MODEM INPUT/OUTPUT TIMING FOR CHANNELS A-D 43
FIGURE 17. 16 MODE (INTEL) DATA BUS WRITE TIMING FOR CHANNELS A-D 44
FIGURE 16. 16 MODE (INTEL) DATA BUS READ TIMING FOR CHANNELS A-D 44
FIGURE 18. 68 MODE (MOTOROLA) DATA BUS READ TIMING FOR CHANNELS A-D 45
FIGURE 19. 68 MODE (MOTOROLA) DATA BUS WRITE TIMING FOR CHANNELS A-D 45
FIGURE 20. RECEIVE READY & INTERRUPT TIMING [NON-FIFO MODE] FOR CHANNELS A-D 46
FIGURE 21. TRANSMIT READY & INTERRUPT TIMING [NON-FIFO MODE] FOR CHANNELS A-D 46
FIGURE 22. RECEIVE READY & INTERRUPT TIMING [FIFO MODE, DMA DISABLED] FOR CHANNELS A-D 47
FIGURE 23. RECEIVE READY & INTERRUPT TIMING [FIFO MODE, DMA ENABLED] FOR CHANNELS A-D 47
FIGURE 24. TRANSMIT READY & INTERRUPT TIMING [FIFO MODE, DMA MODE DISABLED] FOR CHANNELS A-D 48
PACKAGE DIMENSIONS 49
REVISION HISTORY 52
TABLE OF CONTENTS I

ООО «ЛайфЭлектроникс» “LifeElectronics” LLC

ИНН 7805602321 КПП 780501001 Р/С 40702810122510004610 ФАКБ "АБСОЛЮТ БАНК" (ЗАО) в г.Санкт-Петербурге К/С 30101810900000000703 БИК 044030703

Компания «Life Electronics» занимается поставками электронных компонентов импортного и отечественного производства от производителей и со складов крупных дистрибьюторов Европы, Америки и Азии.

С конца 2013 года компания активно расширяет линейку поставок компонентов по направлению коаксиальный кабель, кварцевые генераторы и конденсаторы (керамические, пленочные, электролитические), за счёт заключения дистрибьюторских договоров

Мы предлагаем:

- *Конкурентоспособные цены и скидки постоянным клиентам.*
- *Специальные условия для постоянных клиентов.*
- *Подбор аналогов.*
- *Поставку компонентов в любых объемах, удовлетворяющих вашим потребностям.*

- *Приемлемые сроки поставки, возможна ускоренная поставка.*
- *Доставку товара в любую точку России и стран СНГ.*
- *Комплексную поставку.*
- *Работу по проектам и поставку образцов.*
- *Формирование склада под заказчика.*

- *Сертификаты соответствия на поставляемую продукцию (по желанию клиента).*
- *Тестирование поставляемой продукции.*
- *Поставку компонентов, требующих военную и космическую приемку.*
- *Входной контроль качества.*
- *Наличие сертификата ISO.*

В составе нашей компании организован Конструкторский отдел, призванный помогать разработчикам, и инженерам.

Конструкторский отдел помогает осуществить:

- *Регистрацию проекта у производителя компонентов.*
- *Техническую поддержку проекта.*
- *Защиту от снятия компонента с производства.*
- *Оценку стоимости проекта по компонентам.*
- *Изготовление тестовой платы монтаж и пусконаладочные работы.*

Тел: +7 (812) 336 43 04 (многоканальный)
Email: org@lifeelectronics.ru

www.lifeelectronics.ru