THIS DRAWING IS UNPUBLISHED. RELEASED FOR PUBLICATION -
© COPYRIGHT copyright.dgfe- ALL RIGHTS RESERVED.

LOC	DIST
-	-

REVISIONS

P	LTR	DESCRIPTION	DATE	DWN	APVD
	4	ADD NEW DASH NUMBER	30DEC2015	AJ	SH
	5	ADD NEW PN 5-2170705-0	26JAN2016	JY	SH
	6	CHANGE 5-2170705-0 TO 5-2170705-7	27JAN2016	JY	SH
	7	UPDATE MODEL SHOW AND ADD DIM 16.50	07MAR2016	JY	SH

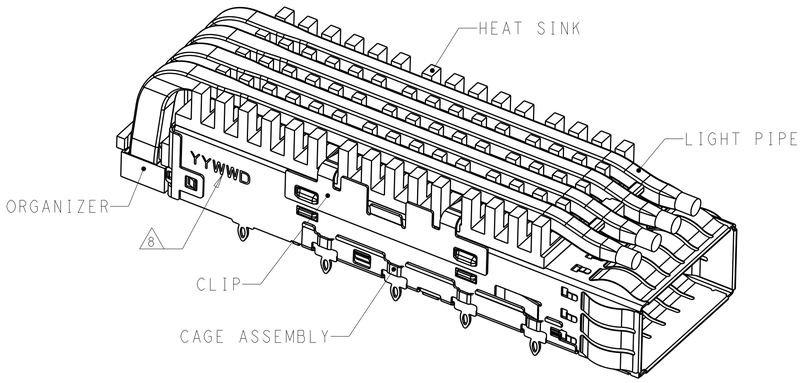

4-2170705-2 SHOWN
SCALE 3:1

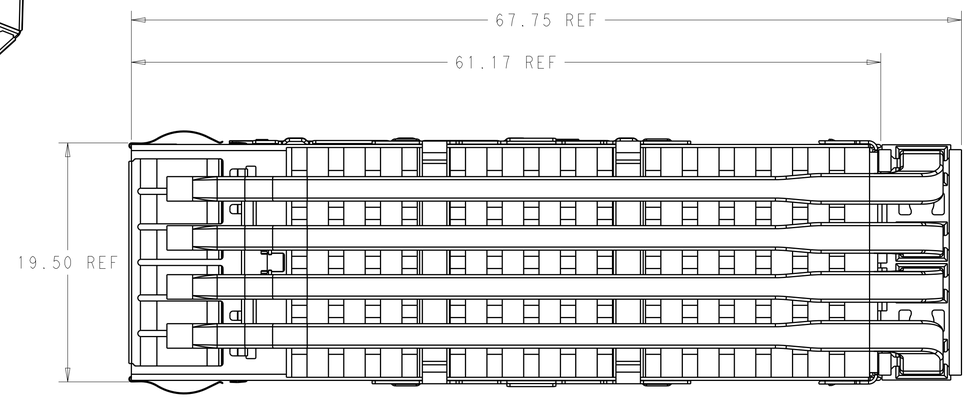

1. MATERIAL: CAGE MATERIAL : 0.25 THICK NICKEL SILVER.
SPRING MATERIAL: COPPER ALLOY
HEAT SINK MATERIAL: ALUMINUM
CLIP MATERIAL: STAINLESS STEEL
LIGHT PIPE MATERIAL: POLYCARBONATE WITH 94 V-0
ORGANIZER MATERIAL: POLYESTER WITH 94 V-0

2. FINISH: SPRING: NICKEL PLATING
HEAT SINK: BLACK ANODIZE

3. DIMENSION APPLIES WITH MODULE INSTALLED IN THE CAGE TO TOP OF HEAT SINK.

4. REFERENCE APPLICATION SPEC 114-32023 FOR RECOMMENDED DRILL HOLE DIAMETER AND PLATING THICKNESS.

5. DATUM AND BASIC DIMENSIONS ESTABLISHED BY CUSTOMERS.

6. MINIMUM PC BOARD THICKNESS : SINGLES SIDED: 1.57 MIN
DOUBLE SIDED: 3.00 MIN

7. DATUM -A- IS TOP SURFACE OF THE HOST BOARD.

8. DATE CODE (YYWWD) MARKED APPROXIMATELY AS SHOWN

9. THESE HOLES ARE OPTIONAL WHEN THE REAR PINS ARE REMOVED.

10. MATES WITH QSFP28 MSA COMPATIBLE TRANSCEIVER.

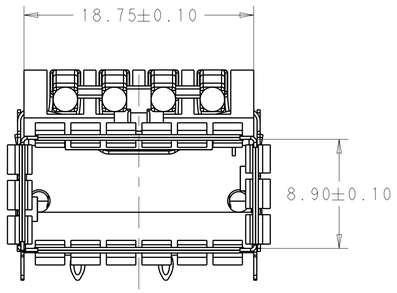

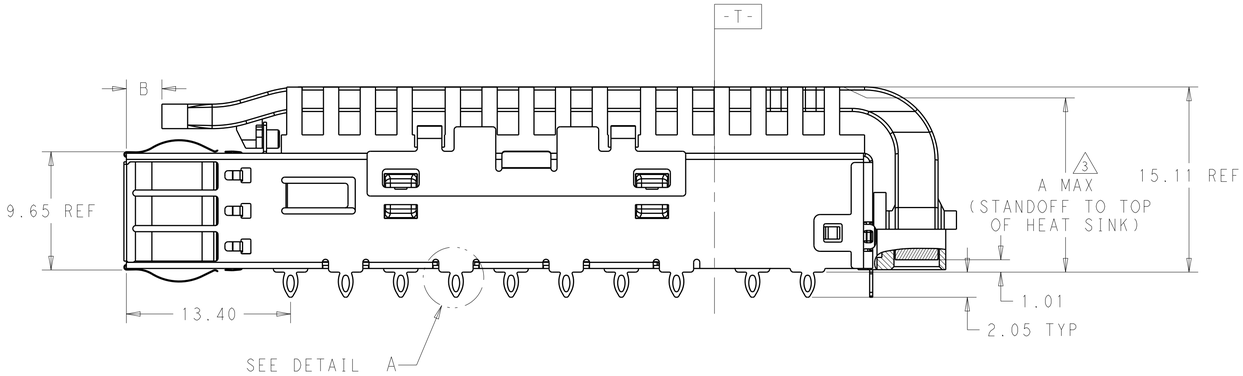

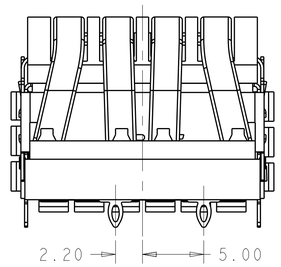

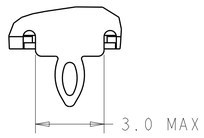

DETAIL A
SCALE 8:1

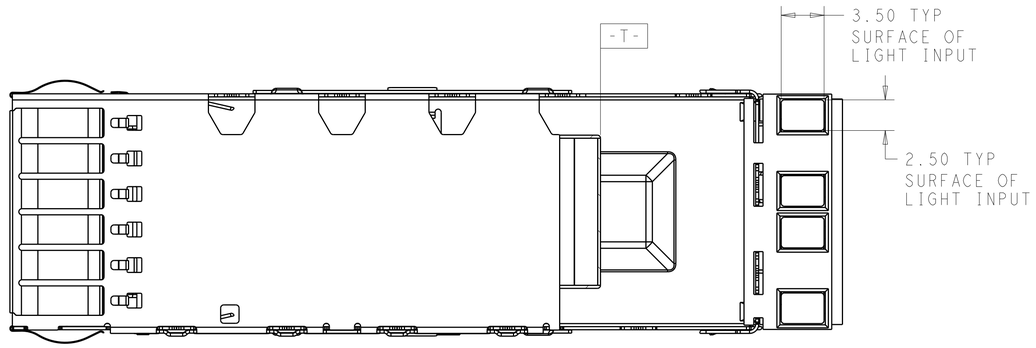

4-2170705-2 AS SHOWN

DESIGN APPROVED THIS PRINT IS
PRELIMINARY
TO FIRST PIECE APPROVAL
CONTACT PRODUCT ENGINEERING
BEFORE USING THIS PRINT

THIS DRAWING IS A CONTROLLED DOCUMENT.

DIMENSIONS: mm

TOLERANCES UNLESS OTHERWISE SPECIFIED:
0 PLC ±0.25
1 PLC ±0.25
2 PLC ±0.20
3 PLC ±0.100
4 PLC ±-
ANGLES ±-

MATERIAL - -
FINISH - -

DWN JASON YANG 07MAR2014
CHK SEAN HAN 26JAN2016
APVD 07MAR2014

PRODUCT SPEC 108-19428
APPLICATION SPEC 114-32023
WEIGHT -

TE Connectivity

NAME CAGE ASSEMBLY, QSFP28, THRU BEZEL WITH EMI SPRING FINGER HEAT SINK, LIGHT PIPE

PRELIMINARY

SIZE	CAGE CODE	DRAWING NO	RESTRICTED TO
A1	00779	C-2170705	-

CUSTOMER DRAWING | SCALE 4:1 | SHEET 1 OF 7 | REV 7

4805 (3/11)

THIS DRAWING IS UNPUBLISHED. RELEASED FOR PUBLICATION -
© COPYRIGHT copyright.dgfe- ALL RIGHTS RESERVED.

LOC	DIST

REVISIONS

P	LTR	DESCRIPTION	DATE	DWN	APVD
	-	SEE SHEET 1	-	-	-

HEAT SINK OPTIONS

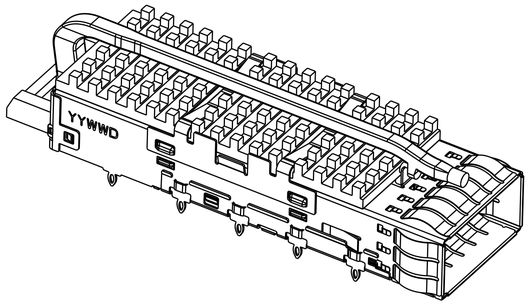

PCI HEAT SINK
SCALE 5:2

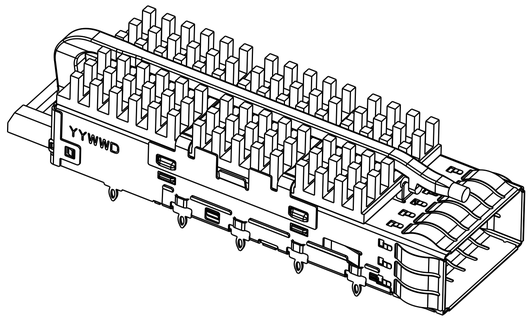

SAN HEAT SINK
SCALE 5:2

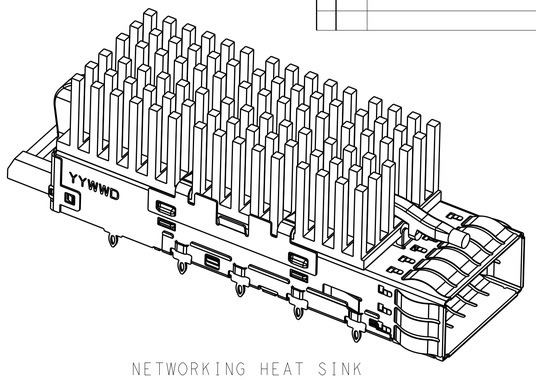

NETWORKING HEAT SINK
SCALE 5:2

OF REAR LEGS OPTIONS

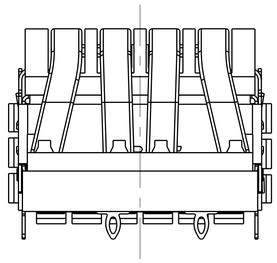

2 REAR LEGS
SCALE 4:1

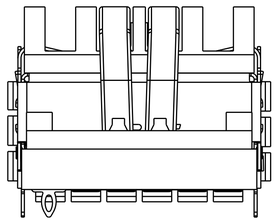

1 REAR LEG
SCALE 4:1

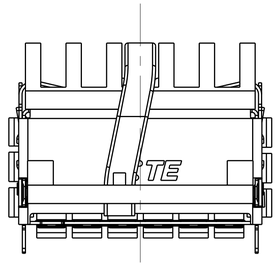

0 REAR LEG
SCALE 4:1

LIGHT PIPE OPTIONS

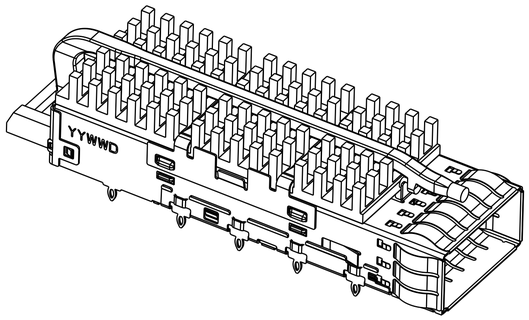

SINGLE LIGHT PIPE
WITHOUT ORGANIZER
SCALE 5:2

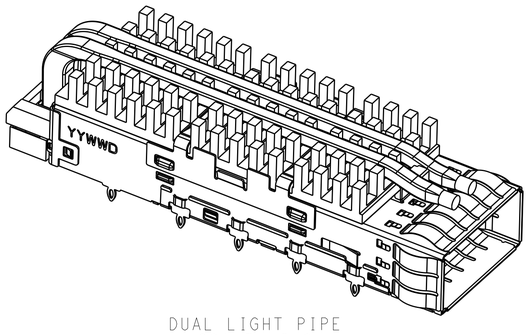

DUAL LIGHT PIPE
SCALE 5:2

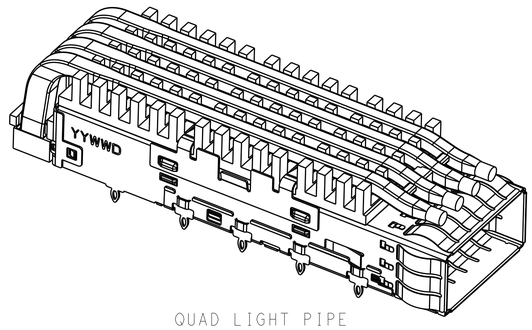

QUAD LIGHT PIPE
SCALE 5:2

THIS DRAWING IS A CONTROLLED DOCUMENT.

DIMENSIONS: mm

TOLERANCES UNLESS OTHERWISE SPECIFIED:
0 PLC ±0.25
1 PLC ±0.25
2 PLC ±0.20
3 PLC ±0.100
4 PLC ±-
ANGLES ±-

MATERIAL - -
FINISH - -

DWN JASON YANG 07MAR2014
CHK SEAN HAN 26JAN2016
APVD 07MAR2014

PRODUCT SPEC 108-19428
APPLICATION SPEC 114-32023
WEIGHT -

TE Connectivity

NAME CAGE ASSEMBLY, QSFP28, THRU BEZEL WITH EMI SPRING FINGER HEAT SINK, LIGHT PIPE

SIZE	CAGE CODE	DRAWING NO	RESTRICTED TO
A1	00779	C-2170705	-

CUSTOMER DRAWING | SCALE 4:1 | SHEET 1 OF 7 | REV 7

4805 (3/11)

THIS DRAWING IS UNPUBLISHED. RELEASED FOR PUBLICATION -
© COPYRIGHT copyright_dgYe- ALL RIGHTS RESERVED.

LOC	DIST	REVISIONS					
		P	LTR	DESCRIPTION	DATE	DWN	APVD
			-	SEE SHEET 1	-	-	-

BOM

DIM B	# REAR PINS	DIM A	APPLICATION (HEAT SINK OPTION)	LIGHT PIPE OPTION	PART NUMBER
3.4	1	23.0	NETWORKING	QUAD LP	5-2170705-9
2.9	1	13.7	PCI	COATED QUAD LP	5-2170705-7
	0	31.6	CUSTOMIZED	QUAD LP	5-2170705-1
	1	23.0	NETWORKING	QUAD LP	4-2170705-9
	1	16.0	SAN	QUAD LP	4-2170705-8
	1	13.7	PCI	QUAD LP	4-2170705-7
	0	23.0	NETWORKING	QUAD LP	4-2170705-6
	0	16.0	SAN	QUAD LP	4-2170705-5
	0	13.7	PCI	QUAD LP	4-2170705-4
	2	23.0	NETWORKING	QUAD LP	4-2170705-3
	2	16.0	SAN	QUAD LP	4-2170705-2
	2	13.7	PCI	QUAD LP	4-2170705-1
	1	23.0	NETWORKING	DUAL LP	2-2170705-9
	1	16.0	SAN	DUAL LP	2-2170705-8
	1	13.7	PCI	DUAL LP	2-2170705-7
	0	23.0	NETWORKING	DUAL LP	2-2170705-6
	0	16.0	SAN	DUAL LP	2-2170705-5
	0	13.7	PCI	DUAL LP	2-2170705-4
	2	23.0	NETWORKING	DUAL LP	2-2170705-3
	2	16.0	SAN	DUAL LP	2-2170705-2
	2	13.7	PCI	DUAL LP	2-2170705-1
	1	23.0	NETWORKING	SINGLE LP	2170705-9
	1	16.0	SAN	SINGLE LP	2170705-8
	1	13.7	PCI	SINGLE LP	2170705-7
	0	23.0	NETWORKING	SINGLE LP	2170705-6
	0	16.0	SAN	SINGLE LP	2170705-5
	0	13.7	PCI	SINGLE LP	2170705-4
	2	23.0	NETWORKING	SINGLE LP	2170705-3
	2	16.0	SAN	SINGLE LP	2170705-2
	2	13.7	PCI	SINGLE LP	2170705-1

THIS DRAWING IS A CONTROLLED DOCUMENT.

DIMENSIONS: mm

TOLERANCES UNLESS OTHERWISE SPECIFIED:
0 PLC ±0.25
1 PLC ±0.25
2 PLC ±0.20
3 PLC ±0.100
4 PLC
ANGLES ±

MATERIAL - -

FINISH - -

DWN JASON YANG 07MAR2014
CHK SEAN HAN 26JAN2016
APVD 07MAR2014

PRODUCT SPEC 108-19428
APPLICATION SPEC 114-32023
WEIGHT -

TE Connectivity

NAME CAGE ASSEMBLY, QSFP28, THRU BEZEL WITH EMI SPRING FINGER HEAT SINK, LIGHT PIPE

SIZE A1 | CAGE CODE 00779 | DRAWING NO C-2170705 | RESTRICTED TO -

CUSTOMER DRAWING | SCALE 4:1 | SHEET 1 OF 7 | REV 7

4805 (3/11)

THIS DRAWING IS UNPUBLISHED. RELEASED FOR PUBLICATION -
© COPYRIGHT copyright dsyr- ALL RIGHTS RESERVED.

LOC	DIST	REVISIONS					
		P	LTR	DESCRIPTION	DATE	DWN	APVD
			-	SEE SHEET 1	-	-	-

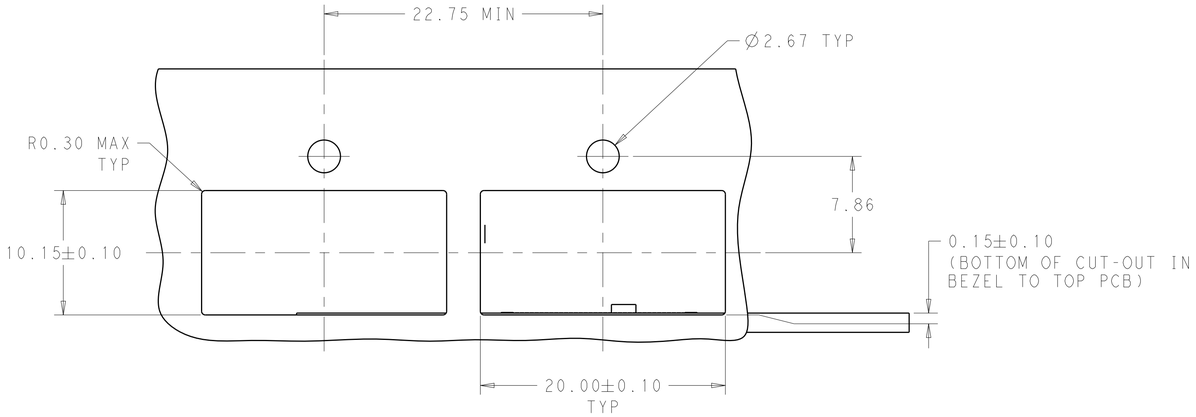

SINGLE LIGHT PIPE TYPE

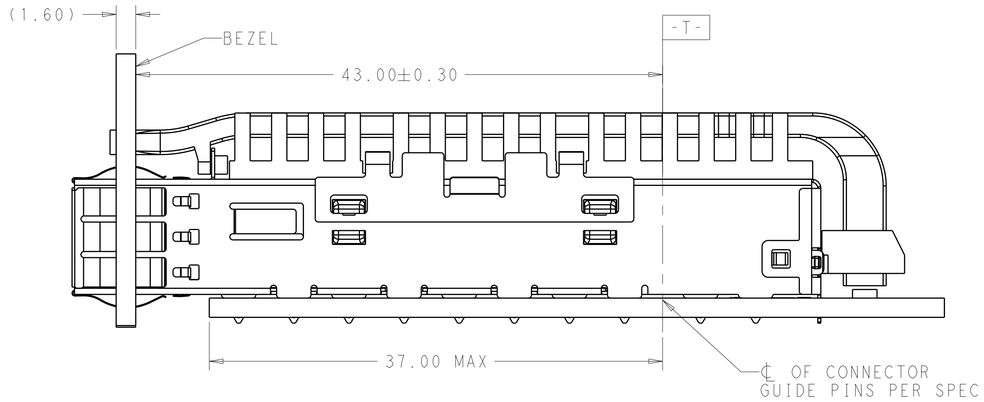

SINGLE SIDE MOUNTING
SCALE 4:1

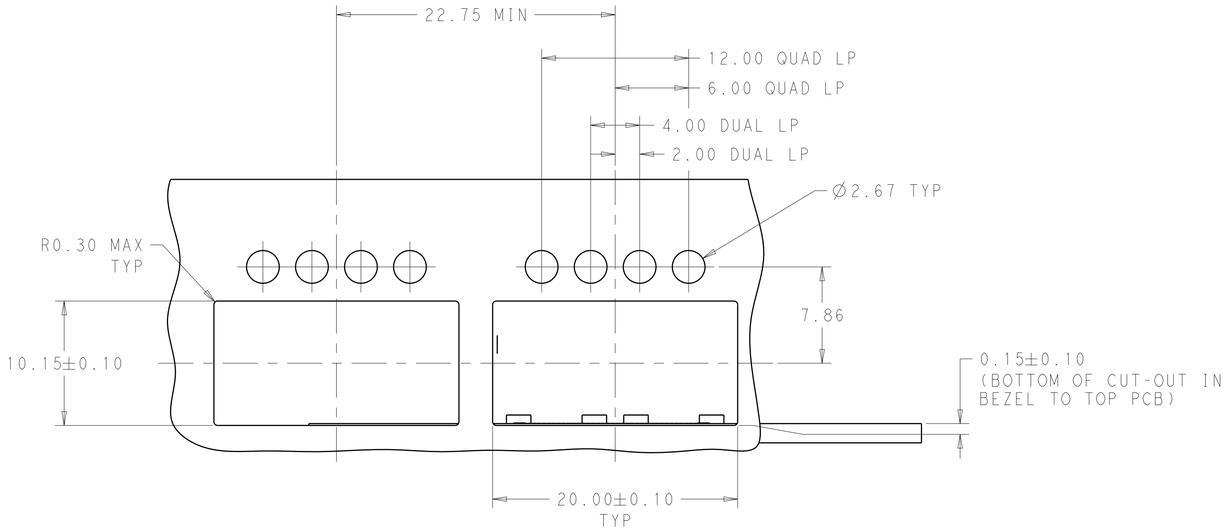

DUAL/QUAD LIGHT PIPE TYPE

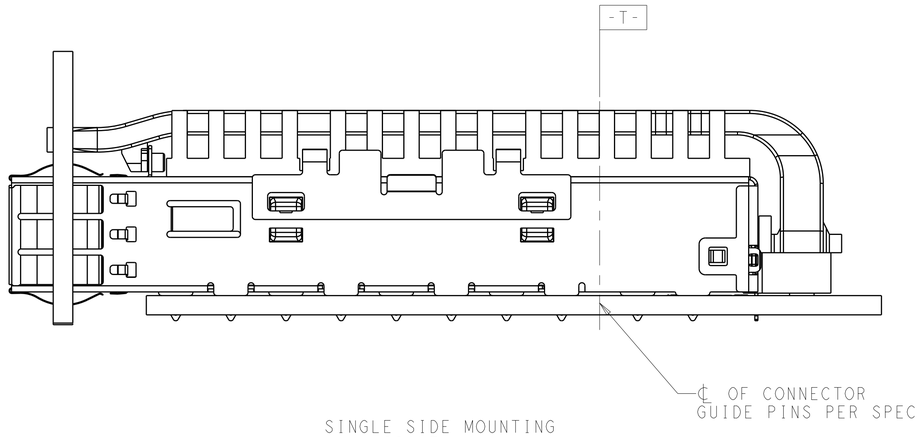

SINGLE SIDE MOUNTING
SCALE 4:1

THIS DRAWING IS A CONTROLLED DOCUMENT.

DIMENSIONS: mm

TOLERANCES UNLESS OTHERWISE SPECIFIED:
0 PLC ±0.25
1 PLC ±0.25
2 PLC ±0.20
3 PLC ±0.100
4 PLC
ANGLES ±

MATERIAL - -
FINISH - -

DWN JASON YANG 07MAR2014
CHK SEAN HAN 26JAN2016
APVD 07MAR2014

PRODUCT SPEC 108-19428
APPLICATION SPEC 114-32023
WEIGHT -

CUSTOMER DRAWING

TE Connectivity

NAME
CAGE ASSEMBLY, QSFP28, THRU BEZEL
WITH EMI SPRING FINGER
HEAT SINK, LIGHT PIPE

SIZE	CAGE CODE	DRAWING NO	RESTRICTED TO
A1	00779	C-2170705	-

SCALE 4:1 SHEET 1 OF 7 REV 7

4805 (3/11)

THIS DRAWING IS UNPUBLISHED. RELEASED FOR PUBLICATION -
© COPYRIGHT copyright.dgte- ALL RIGHTS RESERVED.

LOC	DIST

REVISIONS

P	LTR	DESCRIPTION	DATE	DWN	APVD
	-	SEE SHEET 1	-	-	-

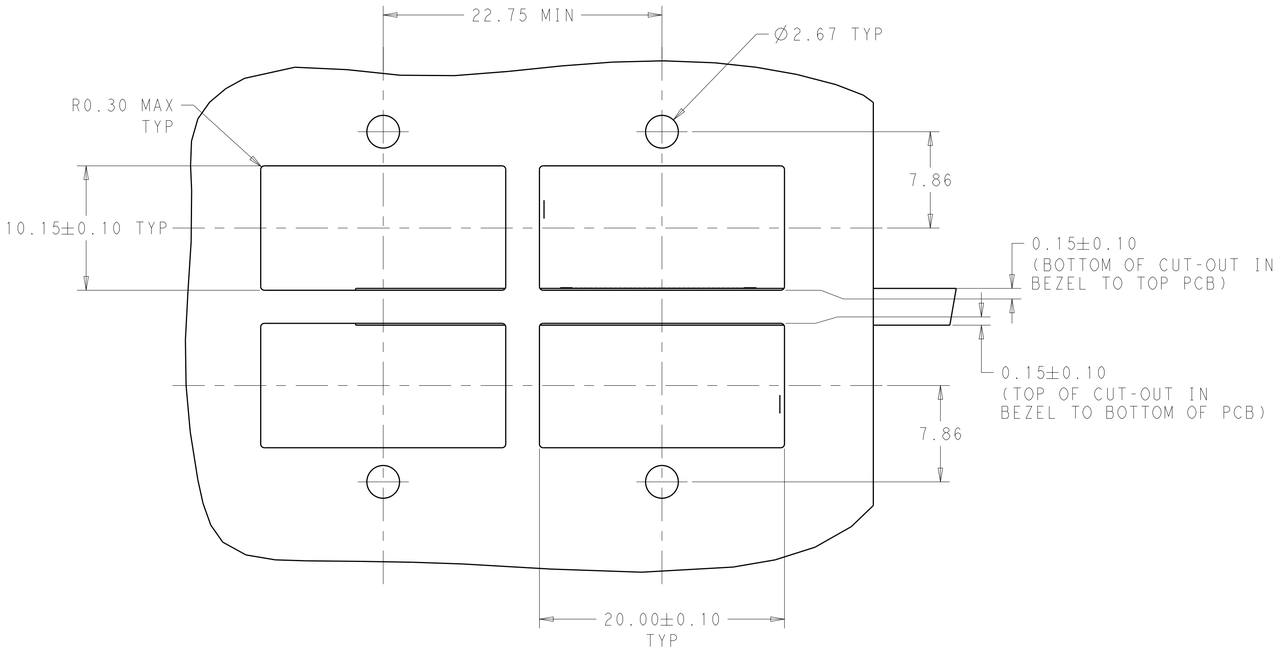

SINGLE LIGHT PIPE TYPE

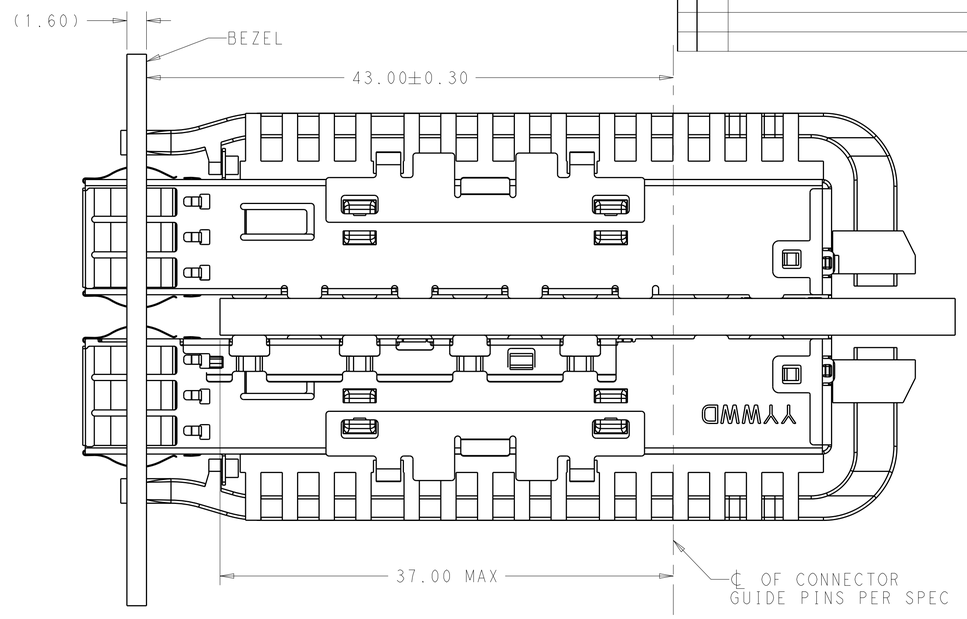

BELLY TO BELLY MOUNTING
SCALE 4:1

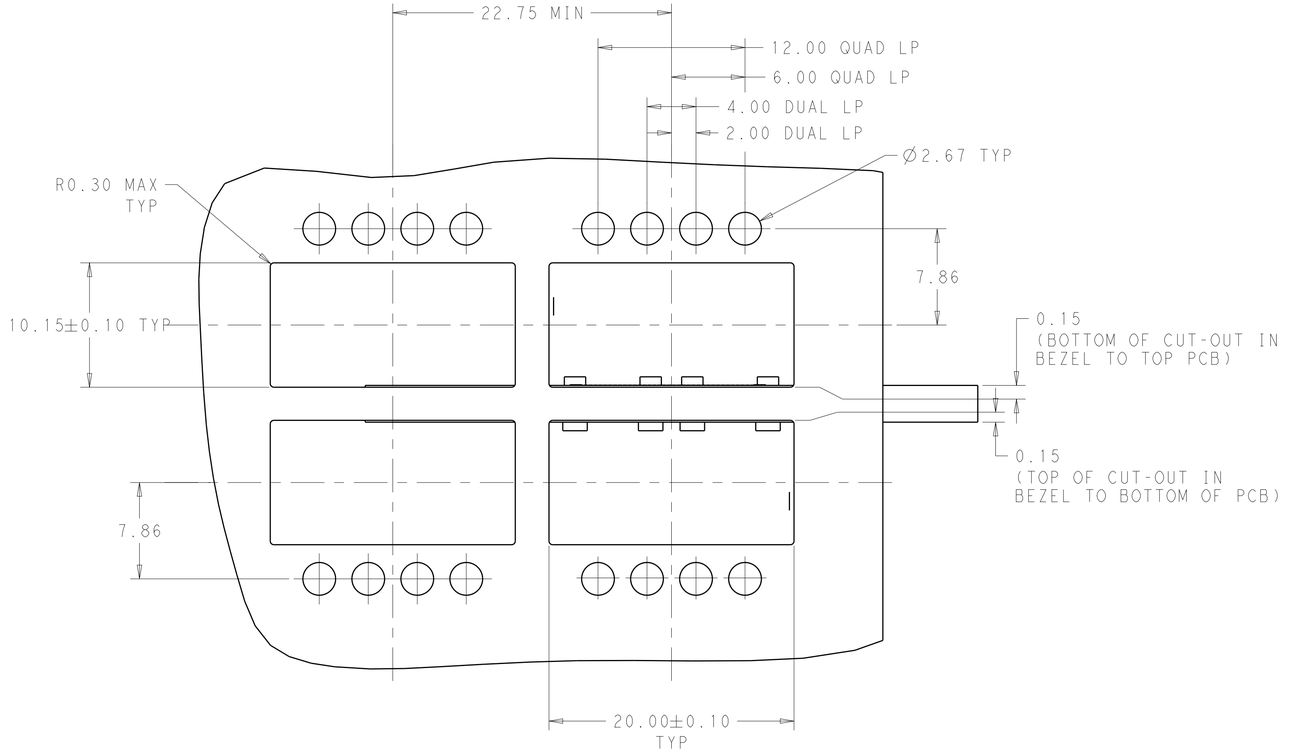

DUAL/QUAD LIGHT PIPE TYPE

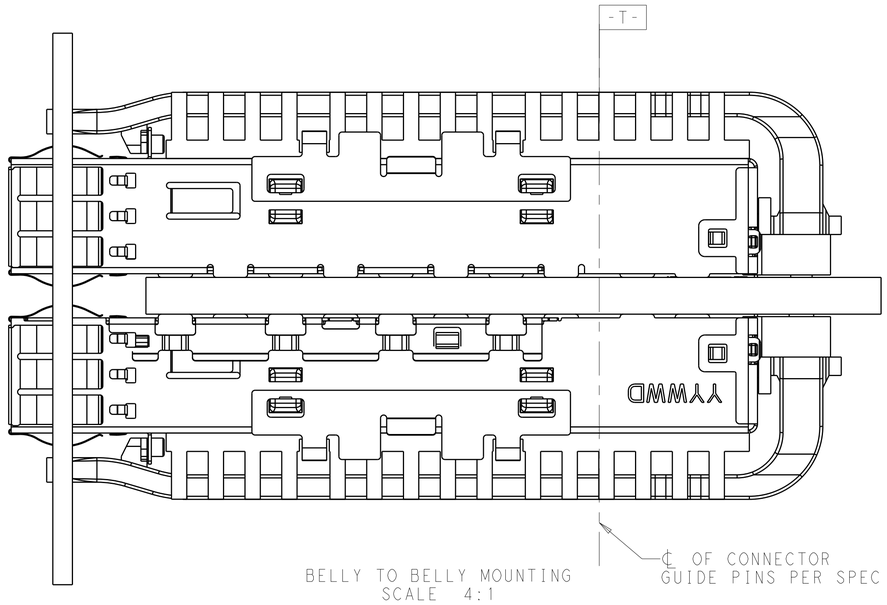

BELLY TO BELLY MOUNTING
SCALE 4:1

THIS DRAWING IS A CONTROLLED DOCUMENT.

DIMENSIONS: mm

TOLERANCES UNLESS OTHERWISE SPECIFIED:

0 PLC	±0.25
1 PLC	±0.25
2 PLC	±0.20
3 PLC	±0.100
4 PLC	±-
ANGLES	±-

MATERIAL - -

FINISH - -

DWN	JASON YANG	07MAR2014
CHK	SEAN HAN	26JAN2016
APVD		07MAR2014

PRODUCT SPEC 108-19428

APPLICATION SPEC 114-32023

WEIGHT -

TE Connectivity

NAME: CAGE ASSEMBLY, QSFP28, THRU BEZEL WITH EMI SPRING FINGER HEAT SINK, LIGHT PIPE

SIZE	CAGE CODE	DRAWING NO	RESTRICTED TO
A1	00779	C-2170705	-

CUSTOMER DRAWING

SCALE	SHEET	OF	REV
4:1	1	7	7

4805 (3/11)

THIS DRAWING IS UNPUBLISHED. RELEASED FOR PUBLICATION -
© COPYRIGHT copyright.dgfe- ALL RIGHTS RESERVED.

LOC	DIST	REVISIONS				
		P	LTR	DESCRIPTION	DATE	DWN	APVD
			-	SEE SHEET 1	-	-	-

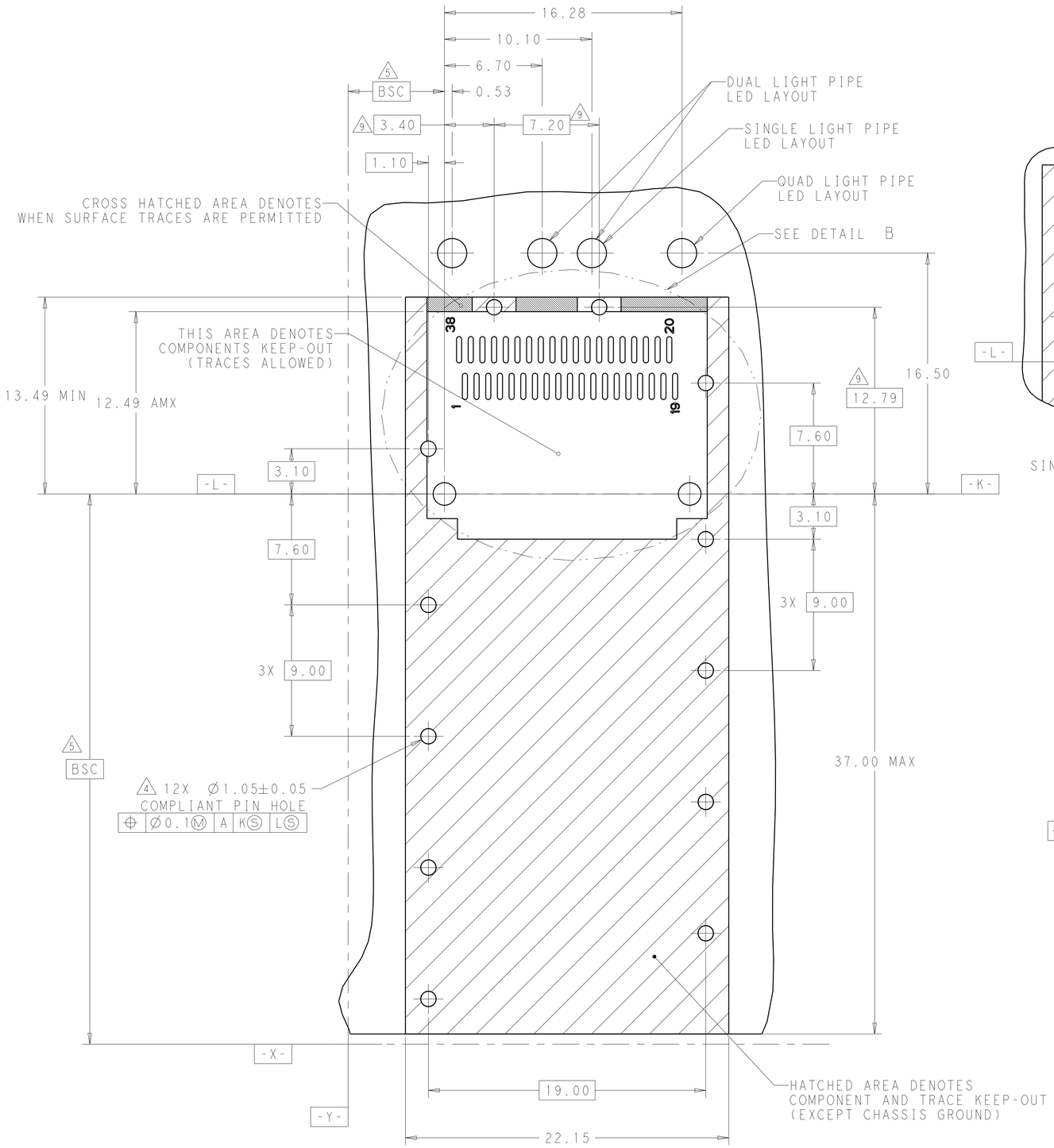

RECOMMENDED PCB LAYOUT
SINGLE TYPE OF 2 REAR HOLES OF LEGS
PCB TOLERANCE: ±0.05
SCALE 6:1

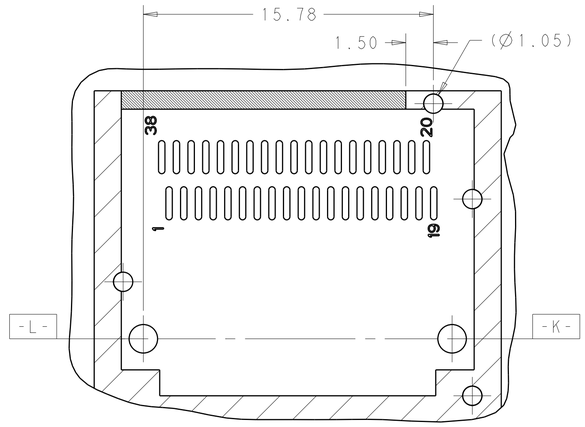

RECOMMENDED PCB LAYOUT
SINGLE TYPE OF 1 REAR HOLES OF LEGS
PCB TOLERANCE: ±0.05
SCALE 6:1

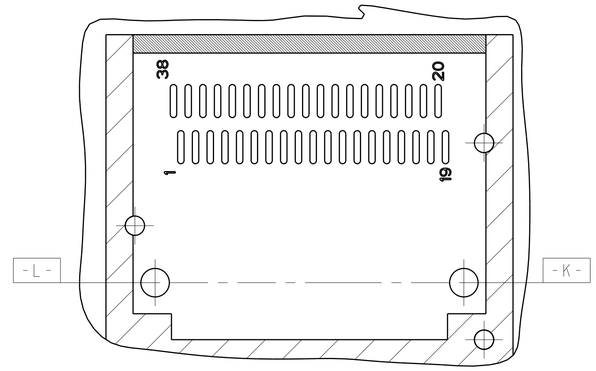

RECOMMENDED PCB LAYOUT
SINGLE TYPE OF 0 REAR HOLES OF LEGS
PCB TOLERANCE: ±0.05
SCALE 6:1

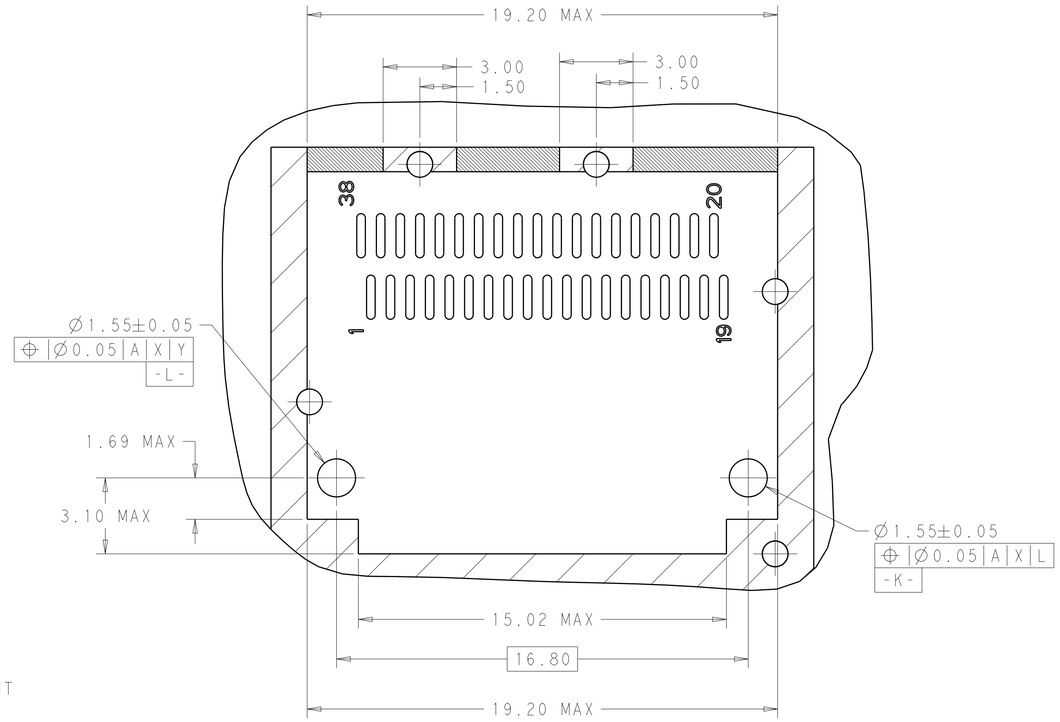

DETAIL B
SCALE 8:1

THIS DRAWING IS A CONTROLLED DOCUMENT.

DIMENSIONS: mm

TOLERANCES UNLESS OTHERWISE SPECIFIED:
0 PLC ±0.25
1 PLC ±0.25
2 PLC ±0.20
3 PLC ±0.100
4 PLC ±
ANGLES ±

MATERIAL -
FINISH -

DWN JASON YANG 07MAR2014
CHK SEAN HAN 26JAN2016
APVD 07MAR2014
PRODUCT SPEC 108-19428
APPLICATION SPEC 114-32023
WEIGHT -

TE Connectivity

NAME CAGE ASSEMBLY, QSFP28, THRU BEZEL WITH EMI SPRING FINGER HEAT SINK, LIGHT PIPE

SIZE A1 | CAGE CODE 00779 | DRAWING NO C-2170705 | RESTRICTED TO -

CUSTOMER DRAWING | SCALE 4:1 | SHEET 1 OF 7 | REV 7

4805 (3/11)

THIS DRAWING IS UNPUBLISHED. RELEASED FOR PUBLICATION -
© COPYRIGHT copyright.dgfe- ALL RIGHTS RESERVED.

LOC	DIST	REVISIONS				
		P	LTR	DESCRIPTION	DATE	DWN	APVD
			-	SEE SHEET 1	-	-	-

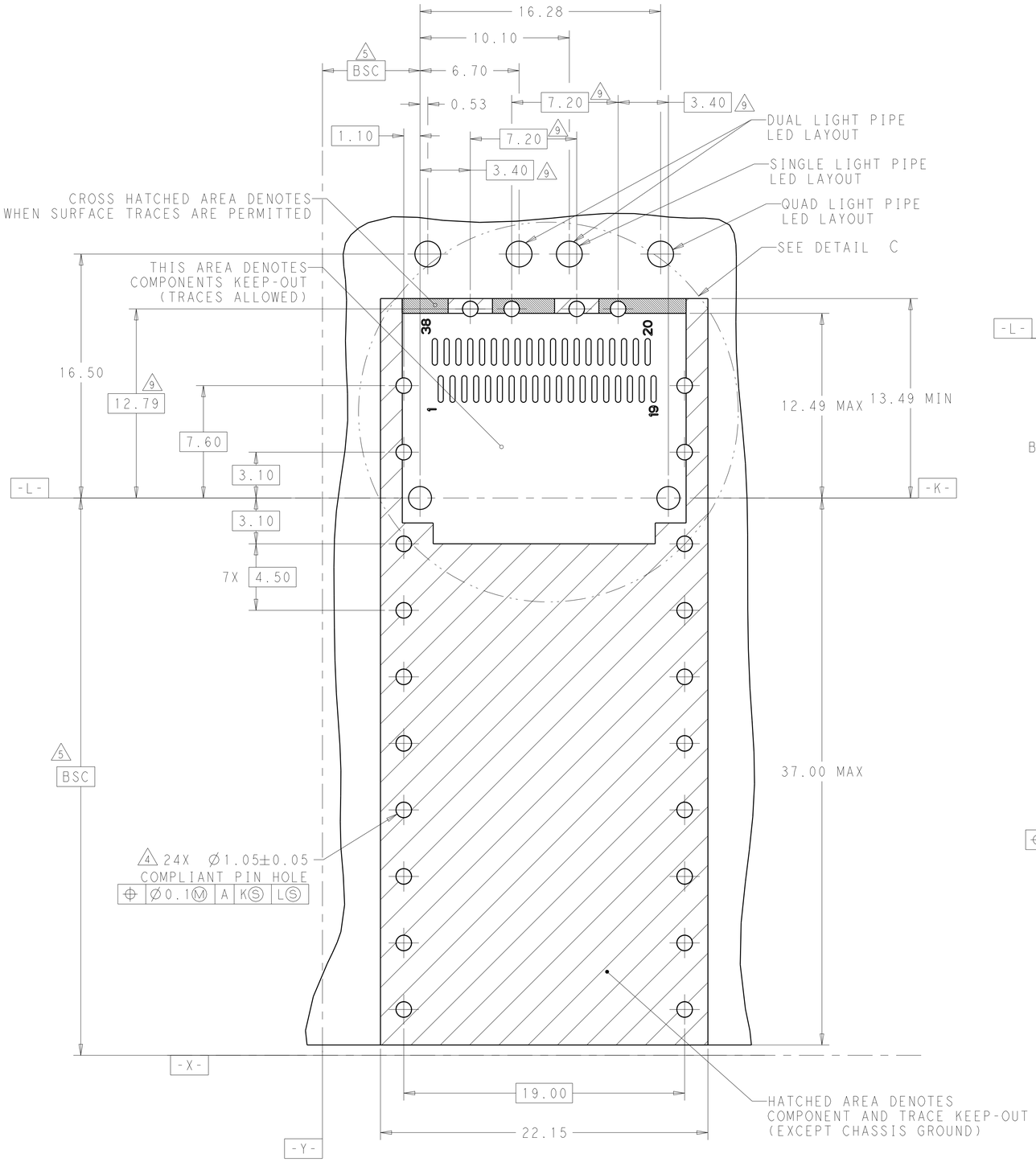

RECOMMENDED PCB LAYOUT
BELLY TO BELLY TYPE OF 2 REAR HOLES OF LEGS
PCB TOLERANCE: ±0.05
SCALE 6:1

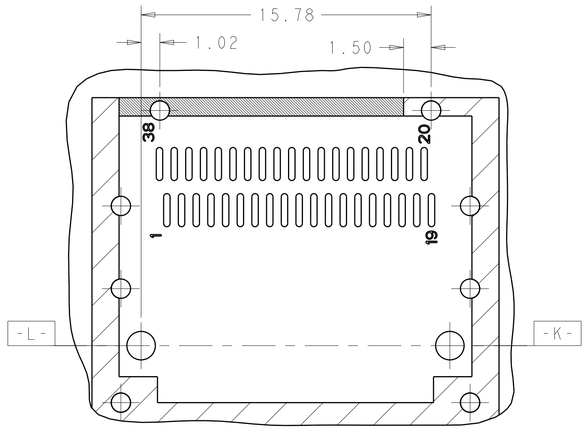

RECOMMENDED PCB LAYOUT
BELLY TO BELLY TYPE OF 1 REAR HOLES OF LEGS
PCB TOLERANCE: ±0.05
SCALE 6:1

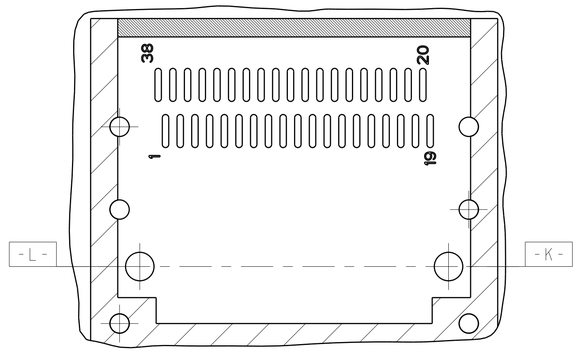

RECOMMENDED PCB LAYOUT
BELLY TO BELLY TYPE OF 0 REAR HOLES OF LEGS
PCB TOLERANCE: ±0.05
SCALE 6:1

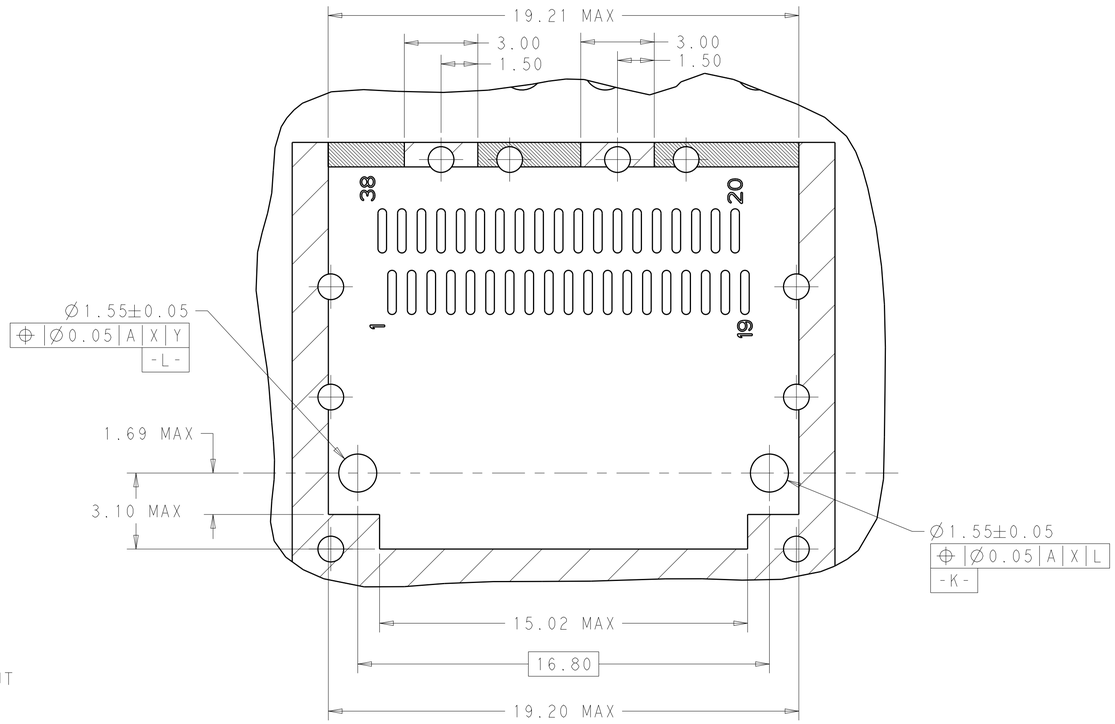

DETAIL C
SCALE 8:1

THIS DRAWING IS A CONTROLLED DOCUMENT.	DWN JASON YANG 07MAR2014	TE Connectivity	
DIMENSIONS: mm	CHK SEAN HAN 26JAN2016	NAME CAGE ASSEMBLY, QSFP28, THRU BEZEL WITH EMI SPRING FINGER HEAT SINK, LIGHT PIPE	
TOLERANCES UNLESS OTHERWISE SPECIFIED: 0 PLC ±0.25, 1 PLC ±0.25, 2 PLC ±0.20, 3 PLC ±0.100, 4 PLC ±, ANGLES ±.	APVD 07MAR2014		
	PRODUCT SPEC 108-19428		
	APPLICATION SPEC 114-32023	SIZE A1 / CAGE CODE 00779 / DRAWING NO C-2170705	RESTRICTED TO -
MATERIAL - -	WEIGHT -		
FINISH - -	CUSTOMER DRAWING	SCALE 4:1 / SHEET 1 OF 7	REV 7

4805 (3/11)

ООО «ЛайфЭлектроникс» “LifeElectronics” LLC

ИНН 7805602321 КПП 780501001 Р/С 40702810122510004610 ФАКБ "АБСОЛЮТ БАНК" (ЗАО) в г.Санкт-Петербурге К/С 30101810900000000703 БИК 044030703

Компания «Life Electronics» занимается поставками электронных компонентов импортного и отечественного производства от производителей и со складов крупных дистрибьюторов Европы, Америки и Азии.

С конца 2013 года компания активно расширяет линейку поставок компонентов по направлению коаксиальный кабель, кварцевые генераторы и конденсаторы (керамические, пленочные, электролитические), за счёт заключения дистрибьюторских договоров

Мы предлагаем:

- *Конкурентоспособные цены и скидки постоянным клиентам.*
- *Специальные условия для постоянных клиентов.*
- *Подбор аналогов.*
- *Поставку компонентов в любых объемах, удовлетворяющих вашим потребностям.*

- *Приемлемые сроки поставки, возможна ускоренная поставка.*
- *Доставку товара в любую точку России и стран СНГ.*
- *Комплексную поставку.*
- *Работу по проектам и поставку образцов.*
- *Формирование склада под заказчика.*

- *Сертификаты соответствия на поставляемую продукцию (по желанию клиента).*
- *Тестирование поставляемой продукции.*
- *Поставку компонентов, требующих военную и космическую приемку.*
- *Входной контроль качества.*
- *Наличие сертификата ISO.*

В составе нашей компании организован Конструкторский отдел, призванный помогать разработчикам, и инженерам.

Конструкторский отдел помогает осуществить:

- *Регистрацию проекта у производителя компонентов.*
- *Техническую поддержку проекта.*
- *Защиту от снятия компонента с производства.*
- *Оценку стоимости проекта по компонентам.*
- *Изготовление тестовой платы монтаж и пусконаладочные работы.*

Тел: +7 (812) 336 43 04 (многоканальный)
Email: org@lifeelectronics.ru

www.lifeelectronics.ru