NOTES:-

1. THE "LF" PRODUCTS MEET EUROPEAN UNION DIRECTIVES AND OTHER COUNTRY REGULATIONS AS DESCRIBED IN GS-22-008
2. LEAD FREE OR RoHS DIRECTIVE LABELING TO BE PROVIDED AS PER GS-14-920 FOR RoHS COMPATIBLE VERSION.

SECTION AA

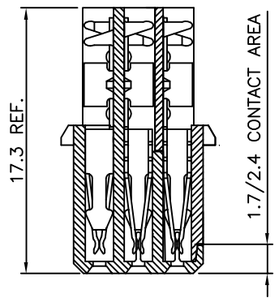

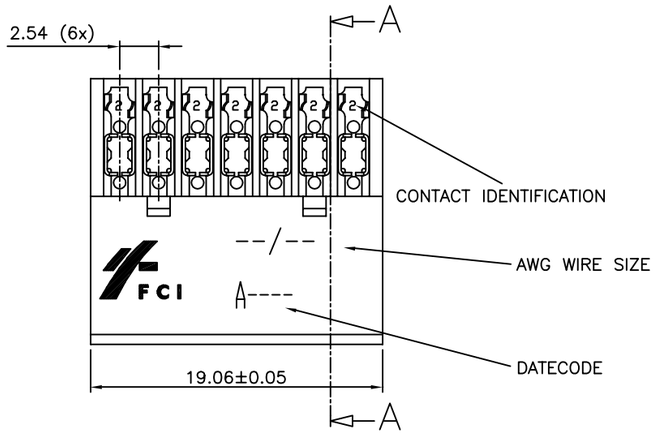

PRODUCT NUMBER	BPS8B21FLD–C0––LF

WITH "LF" SUFFIX	LEAD FREE OR RoHS COMPATIBLE PRODUCT

WIRE ACCOMODATION		
PRODUCT NUMBER	WIRE SIZE	CONTACT IDENTIFICATION
BPS8B21FLD0C0––LF	AWG28/30	0
BPS8B21FLD2C0––LF	AWG24/26	2

CONTACT PLATING	
PLATING CODE	PERFORMANCE LEVEL PER DIN41612
Z0	CLASS 3
Z1	CLASS 2
E9	CLASS 1

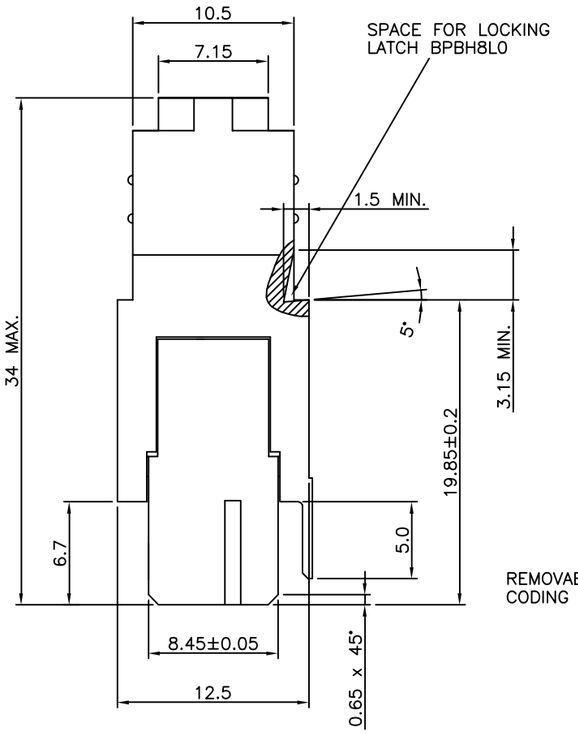

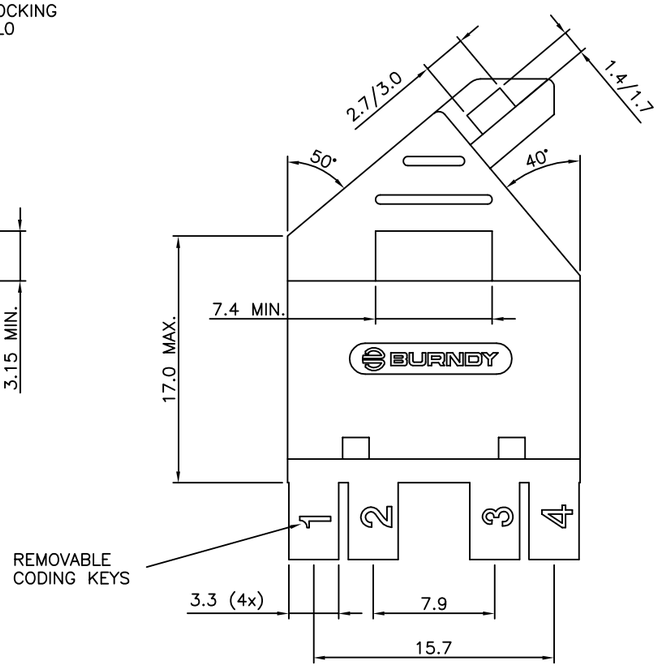

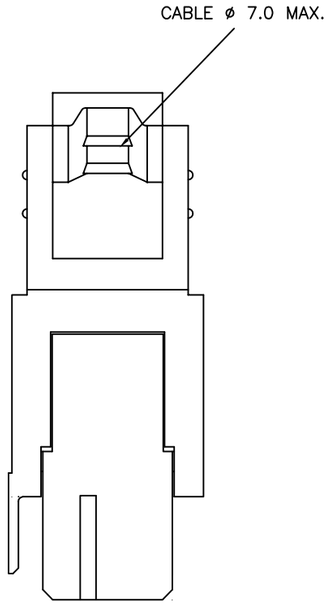

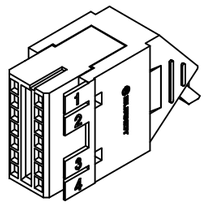

DETAIL B

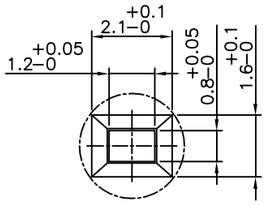

POS. 1

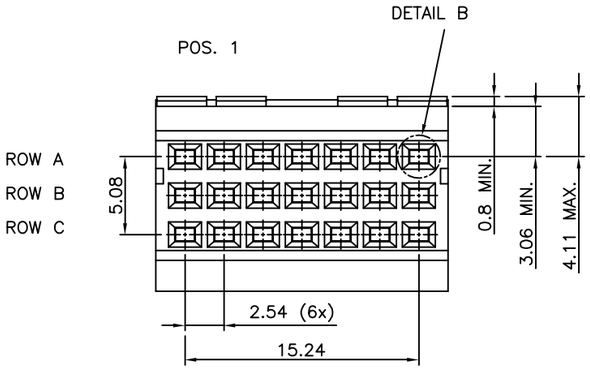

PERFORMANCES CHARACTERISTICS

VOLTAGE RATING : 250 VAC (rms)
CURRENT RATING : 1,5 A AT 25 °C, 1 A AT 70 °C.
INSULATION RESISTANCE : 1000MΩINITIAL, 100MΩ MIN. AFTER TEST
DIELECTRIC WITH–
STANDING VOLTAGE : 1000 VAC (rms).
CONTACT RESISTANCE : 15mΩMAX. INITIAL, 5mΩMAX. RISE OF INITIAL VALUE AFTER TEST.
OPERATING TEMPERATURE*: –40 °C TO +125 °C.
INSERTION FORCE : 1 N MAX./CONTACT.
WITHDRAWAL FORCE : 0,2 N MIN./CONTACT.

*DEPENDING ON THE CABLE, THE MAX. TEMPERATURE CAN BE LOWER. FOR STANDARD PVC INSULATED CABLE : 105 °C MAX.

CONSTRUCTION

BODY MATERIAL : GLASS–REINFORCED THERMOPLASTIC (UL94V–0).
COVER MATERIAL : POLYESTER (PBTP), COLOUR : BLACK.
CONTACT MATERIAL : PHOSPHOR BRONZE.
CONTACT FINISH : Au OVER Ni IN CONTACT AREA
Sn (MATT TIN) ON I.D.C. TERMINAL
Z0 : PERFORMANCE LEVEL PER DIN41612 CLASS 3
Z1 : PERFORMANCE LEVEL PER DIN41612 CLASS 2
E9 : PERFORMANCE LEVEL PER DIN41612 CLASS 1
OTHERS : CONSULT FCI
TIE–WRAP : OPTIONAL PART N°. TF3.

PART NUMBERS

BPS8B21FLD0C0––LF CONNECTOR FOR WIRE SIZE AWG28, AWG30. (CONTACT IDENTIFICATION : 0).
BPS8B21FLD2C0––LF CONNECTOR FOR WIRE SIZE AWG24, AWG26 (CONTACT IDENTIFICATION : 2).

AWG WIRE SIZE MARKING

BPS8B21FLD0C0––LF : 28/30.
BPS8B21FLD2C0––LF : 24/26.

DATECODE MARKING

A + YEAR & WEEKCODE, EXAMPLE : A9950.

mat'l. code				surface	tolerance	projection
SEE NOTE				ISO 1302	ISO 406 ISO 1101	
ltr	ecn no	dr	date	tolerances unless otherwise specified		
A	F00819	DLE	2000–10–23	angles	linear 0.1±0.2	mm
B	I05–0123	MINI	2005–07–27		0.01±0.1	
C	I06–0067	MINI	2006–06–01	±1°		scale –
D	I07–0081	KR	2007–06–28	dr	D.LEGRAND	2000–10–23
				engr	J.F.NOTTEAU	2000–10–23
				chr	RAKHEE GEORGE	2007–06–28
				appd	RAKHEE GEORGE	2007–06–28

sheet index	revision	D	D	D
	sheet	1	2	3

product family: BPS8

title: ASSY BPS8 21 POS. A,B,C LOADED

dwg no: 55355 — sheet 1 of 3 — size A3

type: Product Customer Drawing

form: A3

PDM: Rev:D STATUS: Released Printed: May 14, 2011

FCIconnect.com
Copyright FCI

PRODUCT NUMBER	BPS8B21FLD-00--LF

WITH "LF" SUFFIX	LEAD FREE OR RoHS COMPATIBLE PRODUCT

WIRE ACCOMODATION		
PRODUCT NUMBER	WIRE SIZE	CONTACT IDENTIFICATION
BPS8B21FLD000--LF	AWG28/30	0
BPS8B21FLD200--LF	AWG24/26	2

CONTACT PLATING	
PLATING CODE	PERFORMANCE LEVEL PER DIN41612
Z0	CLASS 3
Z1	CLASS 2
E9	CLASS 1

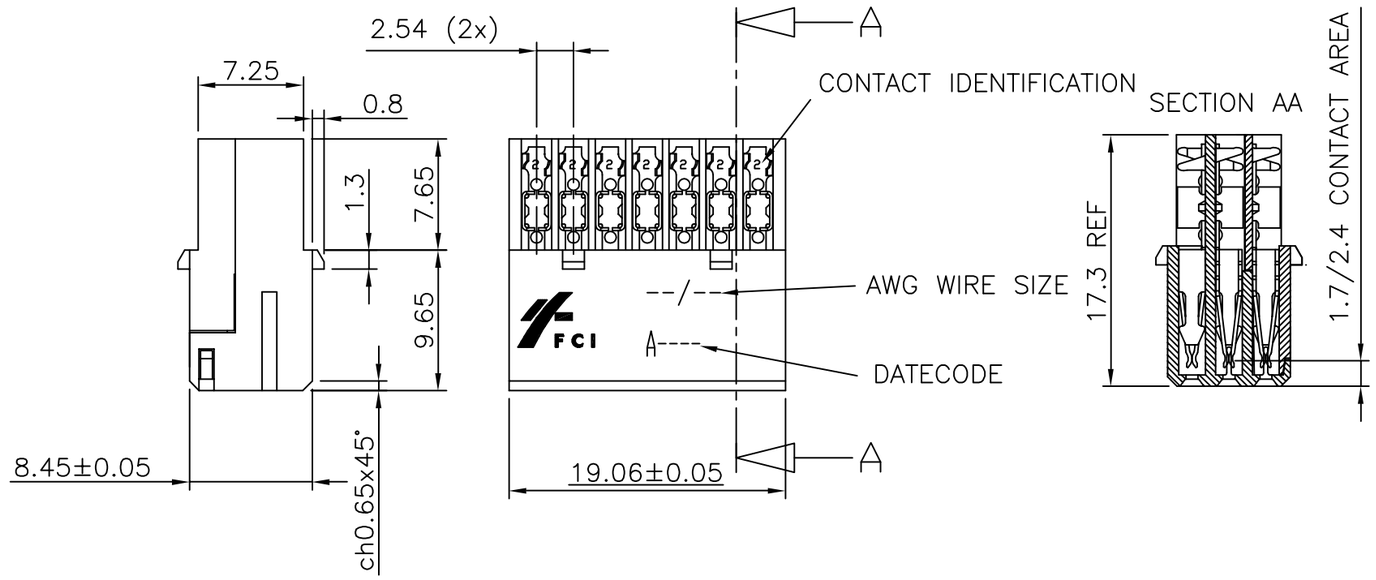

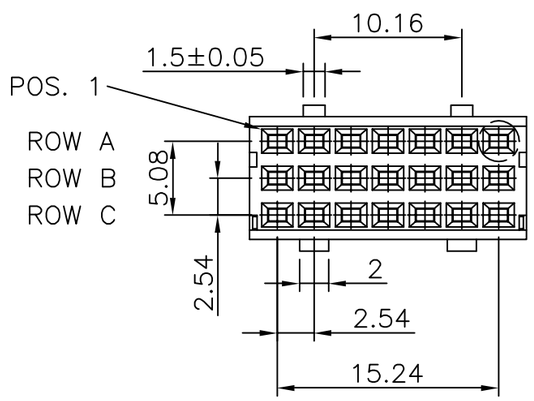

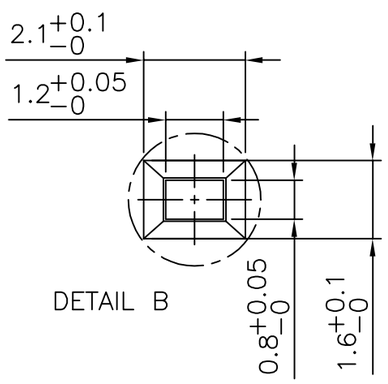

NOTES:-

1. THE "LF" PRODUCTS MEET EUROPEAN UNION DIRECTIVES AND OTHER COUNTRY REGULATIONS AS DESCRIBED IN GS-22-008
2. LEAD FREE OR RoHS DIRECTIVE LABELING TO BE PROVIDED AS PER GS-14-920 FOR RoHS COMPATIBLE VERSION.

PERFORMANCES CHARACTERISTICS

VOLTAGE RATING : 250 VAC (rms)
CURRENT RATING : 1,5 A AT 25 °C, 1 A AT 70 °C.
INSULATION RESISTANCE : 1000MΩINITIAL, 100MΩMIN. AFTER TEST
DIELECTRIC WITH-
STANDING VOLTAGE : 1000 VAC (rms).
CONTACT RESISTANCE : 15 mΩMAX. INITIAL, 5mΩMAX. RISE OF INITIAL VALUE AFTER TEST.

OPERATING TEMPERATURE*: −40 °C TO +125 °C.
INSERTION FORCE : 1 N MAX./CONTACT.
WITHDRAWAL FORCE : 0,2 N MIN./CONTACT.
*DEPENDING ON THE CABLE, THE MAX. TEMPERATURE CAN BE LOWER.
FOR STANDARD PVC INSULATED CABLE : 105 °C MAX.

CONSTRUCTION

BODY MATERIAL : GLASS-REINFORCED THERMOPLASTIC (UL94V-0).
CONTACT MATERIAL : PHOSPHOR BRONZE.
CONTACT FINISH : Au OVER Ni IN CONTACT AREA
Sn (MATT TIN) ON I.D.C. TERMINAL

Z0 : PERFORMANCE LEVEL PER DIN41612 CLASS 3
Z1 : PERFORMANCE LEVEL PER DIN41612 CLASS 2
E9 : PERFORMANCE LEVEL PER DIN41612 CLASS 1
OTHERS : CONSULT FCI

PART NUMBERS

BPS8B21FLD000--LF CONNECTOR FOR WIRE SIZE AWG28, AWG30. (CONTACT IDENTIFICATION : 0).
BPS8B21FLD200--LF CONNECTOR FOR WIRE SIZE AWG24, AWG26 (CONTACT IDENTIFICATION : 2).

AWG WIRE SIZE MARKING

BPS8B21FLD000--LF : 28/30
BPS8B21FLD200--LF : 24/26

DATECODE MARKING

A + YEAR & WEEKCODE, EXAMPLE : A9950.

mat'l. code				surface	tolerance	projection	product family
SEE NOTE				ISO 1302	ISO 406 ISO 1101		BPS8
ltr	ecn no	dr	date	tolerances unless otherwise specified			title
A	F00819	DLE	2000-10-19	angles	linear 0.1±0.2	mm	ASSY BPS8
B	I05-0123	MINI	2005-07-27		0.01±0.1		21 POS. A,B,C LOADED
C	I06-0067	MINI	2006-06-01	±1°		scale –	
D	I07-0081	KR	2007-06-28	dr	D.LEGRAND 2000-10-19		dwg no 55355 sheet 2 of 3 size A3
				engr	J.F.NOTTEAU 2000-10-19		
				chr	RAKHEE GEORGE 2007-06-28		
				appd	RAKHEE GEORGE 2007-06-28		type Product Customer Drawing
sheet index	revision sheet						

form: A3

PDM: Rev:D STATUS: Released Printed: May 14, 2011

FCIconnect.com
Copyright FCI

NOTES:-

1. THE "LF" PRODUCTS MEET EUROPEAN UNION DIRECTIVES AND OTHER COUNTRY REGULATIONS AS DESCRIBED IN GS-22-008
2. LEAD FREE OR RoHS DIRECTIVE LABELING TO BE PROVIDED AS PER GS-14-920 FOR RoHS COMPATIBLE VERSION.

PRODUCT NUMBER	BPS8B21FLD–M0––LF	WITH "LF" SUFFIX	LEAD FREE OR RoHS COMPATIBLE PRODUCT

WIRE ACCOMODATION		
PRODUCT NUMBER	WIRE SIZE	CONTACT IDENTIFICATION
BPS8B21FLD0M0––LF	AWG28/30	0
BPS8B21FLD2M0––LF	AWG24/26	2

CONTACT PLATING	
PLATING CODE	PERFORMANCE LEVEL PER DIN41612
Z0	CLASS 3
Z1	CLASS 2
E9	CLASS 1

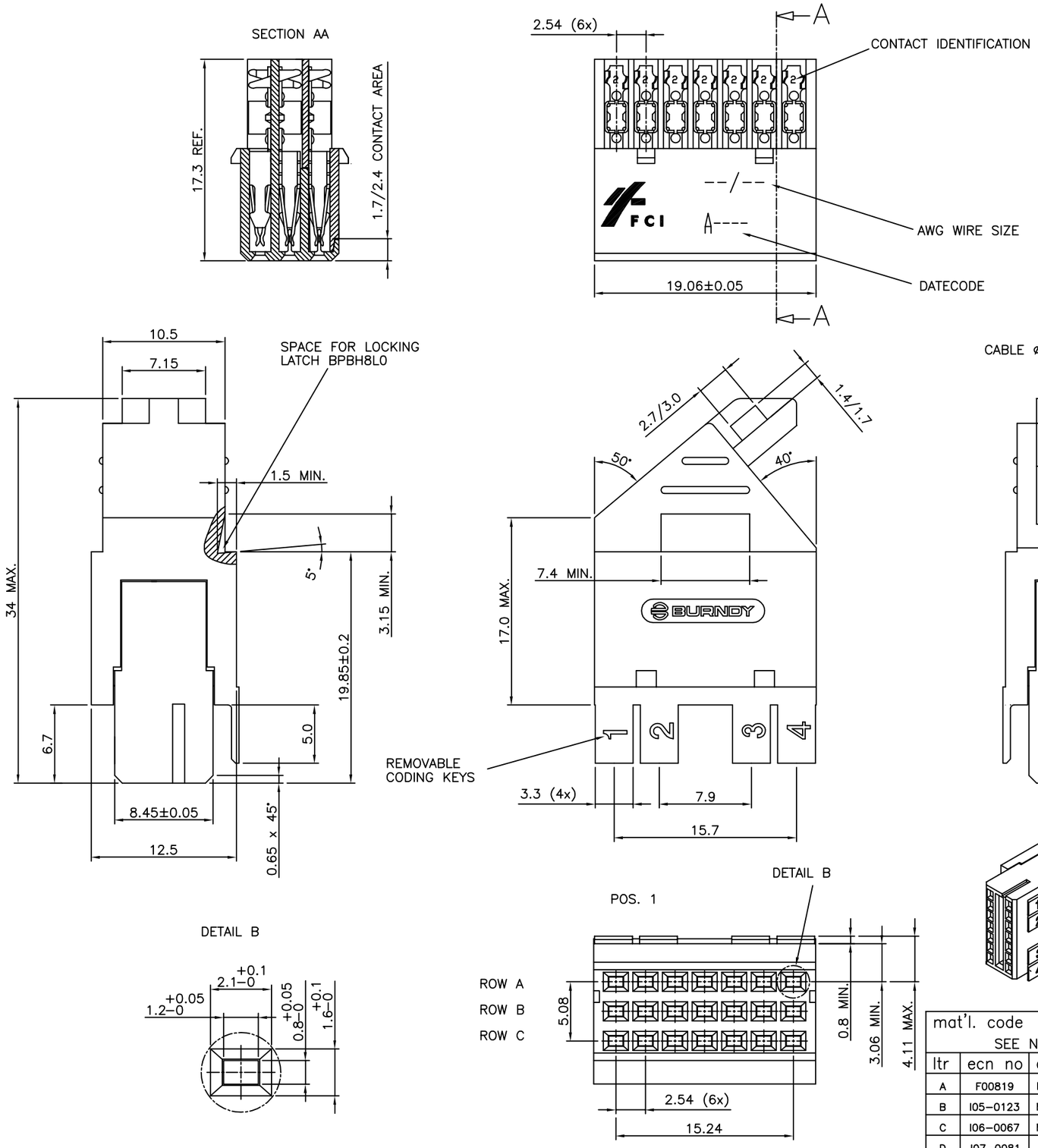

PERFORMANCES CHARACTERISTICS

VOLTAGE RATING : 250 VAC (rms)

CURRENT RATING : 1,5 A AT 25 °C, 1 A AT 70 °C.

INSULATION RESISTANCE : 1000MΩINITIAL, 100MΩMIN. AFTER TEST

DIELECTRIC WITHSTANDING VOLTAGE : 1000 VAC (rms).

CONTACT RESISTANCE : 15mΩMAX. INITIAL, 5mΩMAX. RISE OF INITIAL VALUE AFTER TEST.

OPERATING TEMPERATURE*: –40 °C TO +125 °C.

INSERTION FORCE : 1 N MAX./CONTACT.

WITHDRAWAL FORCE : 0,2 N MIN./CONTACT.

*DEPENDING ON THE CABLE, THE MAX. TEMPERATURE CAN BE LOWER.

FOR STANDARD PVC INSULATED CABLE : 105 °C MAX.

CONSTRUCTION

BODY MATERIAL : GLASS–REINFORCED THERMOPLASTIC (UL94V–0).

COVER MATERIAL : Ni PLATED ABS MATERIAL

CONTACT MATERIAL : PHOSPHOR BRONZE.

CONTACT FINISH : Au OVER Ni IN CONTACT AREA

Sn (MATT TIN) ON I.D.C. TERMINAL

Z0 : PERFORMANCE LEVEL PER DIN41612 CLASS 3

Z1 : PERFORMANCE LEVEL PER DIN41612 CLASS 2

E9 : PERFORMANCE LEVEL PER DIN41612 CLASS 1

OTHERS : CONSULT FCI

TIE–WRAP : OPTIONAL (PART N°. TF3)

PART NUMBERS

BPS8B21FLD0M0––LF CONNECTOR FOR WIRE SIZE AWG28, AWG30. (CONTACT IDENTIFICATION : 0).

BPS8B21FLD2M0––LF CONNECTOR FOR WIRE SIZE AWG24, AWG26 (CONTACT IDENTIFICATION : 2).

AWG WIRE SIZE MARKING

BPS8B21FLD0M0––LF : 28/30.

BPS8B21FLD2M0––LF : 24/26.

DATECODE MARKING

A + YEAR & WEEKCODE, EXAMPLE : A9950.

mat'l. code	surface	tolerance	projection
SEE NOTE	ISO 1302 ✓	ISO 406 ISO 1101	

ltr	ecn no	dr	date	tolerances unless otherwise specified		
A	F00819	DLE	2000–10–23	angles	linear	0.1±0.2
B	I05–0123	MINI	2005–07–27			0.01±0.1
C	I06–0067	MINI	2006–06–01	±1°		
D	I07–0081	KR	2007–06–28			

dr	D.LEGRAND	2000–10–23
engr	J.F.NOTTEAU	2000–10–23
chr	RAKHEE GEORGE	2007–06–28
appd	RAKHEE GEORGE	2007–06–28

mm

scale –

product family: BPS8

title: ASSY BPS8 21 POS. A,B,C LOADED

dwg no: 55355 sheet 3 of 3 size A3

type: Product Customer Drawing

sheet index | revision sheet

form: A3

FCIconnect.com
Copyright FCI

ООО «ЛайфЭлектроникс» “LifeElectronics” LLC

ИНН 7805602321 КПП 780501001 Р/С 40702810122510004610 ФАКБ "АБСОЛЮТ БАНК" (ЗАО) в г.Санкт-Петербурге К/С 30101810900000000703 БИК 044030703

Компания «Life Electronics» занимается поставками электронных компонентов импортного и отечественного производства от производителей и со складов крупных дистрибьюторов Европы, Америки и Азии.

С конца 2013 года компания активно расширяет линейку поставок компонентов по направлению коаксиальный кабель, кварцевые генераторы и конденсаторы (керамические, пленочные, электролитические), за счёт заключения дистрибьюторских договоров

Мы предлагаем:

- *Конкурентоспособные цены и скидки постоянным клиентам.*
- *Специальные условия для постоянных клиентов.*
- *Подбор аналогов.*
- *Поставку компонентов в любых объемах, удовлетворяющих вашим потребностям.*

- *Приемлемые сроки поставки, возможна ускоренная поставка.*
- *Доставку товара в любую точку России и стран СНГ.*
- *Комплексную поставку.*
- *Работу по проектам и поставку образцов.*
- *Формирование склада под заказчика.*

- *Сертификаты соответствия на поставляемую продукцию (по желанию клиента).*
- *Тестирование поставляемой продукции.*
- *Поставку компонентов, требующих военную и космическую приемку.*
- *Входной контроль качества.*
- *Наличие сертификата ISO.*

В составе нашей компании организован Конструкторский отдел, призванный помогать разработчикам, и инженерам.

Конструкторский отдел помогает осуществить:

- *Регистрацию проекта у производителя компонентов.*
- *Техническую поддержку проекта.*
- *Защиту от снятия компонента с производства.*
- *Оценку стоимости проекта по компонентам.*
- *Изготовление тестовой платы монтаж и пусконаладочные работы.*

Тел: +7 (812) 336 43 04 (многоканальный)
Email: org@lifeelectronics.ru

www.lifeelectronics.ru