M0420SD-204MDAR1-C

Vacuum Fluorescent Display Module

RoHS Compliant

Newhaven Display International, Inc.
2511 Technology Drive, Suite 101
Elgin IL, 60124
Ph: 847-844-8795 Fax: 847-844-8796

www.newhavendisplay.com
nhtech@newhavendisplay.com nhsales@newhavendisplay.com

1. SCOPE:

2. FEATURES:

2.1 Simple connection to the host system. Either parallel or serial input interface can be selected. In case of serial input, it is possible to choose 300 to 19,200 bps by combination of soldering Switches (P0-P1).
2.2 Since a DC/DC converter is used, only +5VDC power source is required to operate the module.
2.3 One chip micom offer ASCII(96 characters)+European(126 characters) or ASCII + Japanese Katakana(126 characters) Font.
2.4 Four brightness levels can be selected by dimming function.
2.5 High quality blue-green(505 nm) vacuum fluorescent display provides an attractive and readable Medium. Other colors can be achieved by simple wavelength filters.
2.6 Characters are provided with a 5×7 dot matrix.
2.7 The module has up to sixteen user definable characters.

3. GENERAL DESCRIPTIONS

3.1 This specification becomes effective after being approved by the purchaser.
3.2 When any conflict is found in the specification, appropriate action shall be taken Upon agreement of both parties.
3.3 The expected necessary service parts should be arranged by the customer before the completion of profucion.

4. PRODUCT SPECIFICATIONS

4.1 Type

Table_1

Type	VFM204MDAR1-O
Digit Format	5×7 dot matrix.

4.2 Outer Dimensions, Weight (See Fig_3 for details)

Table_2

Parameter		Specification	Unit
Outer Dimensions	Width	150.0±1.0	mm
	Height	64.0±1.0	mm
	Thickness	28.6 Max	mm
Weight		Typical 140	g

4.3 Specifications of the Display Panel (See Fig-3 for details)

Table_3

Parameter		Symbol	Specification	Unit
Display Size		W x H	89.52 x 33.07	mm
Number of Digit		-	20 Digits x 4 Rows	-
Character Size		W x H	3.07 x 4.87	mm
Character Pitch	Horizontal	CP(x)	4.55	mm
	Vertical	CP(y)	9.40	mm
Display Color		-	Blue-Green (505 nm)	-

4.4 Environment Conditions

Table_4

Parameter	Symbol	Min.	Max.	Unit
Operating Temperature	Topr	-40	+85	°C
Storage Temperature	Tstg	-50	+95	°C
Humidity (Operating)	Hopr	0	85	%
Humidity (Non-operating)	Hstg	0	90	%
Vibration (10 ~ 55 Hz)	-	-	4	G
Shock	-	-	40	G

4.5 Absolute Maximum Ratings

Table_5

Parameter	Symbol	Min.	Max.	Unit
Supply Voltage	V_{CC}	-	7.0	V_{DC}
Input Signal Voltage	I_{IS}	0	V_{CC}	V_{DC}

4.6 Recommend Operating Conditions

Table_6

Parameter	Symbol	Min.	Typ.	Max.	Unit
Supply Voltage	V_{CC}	4.5	5.0	5.5	V_{DC}
H-Level Input Voltage	V_{IH}	2.4	-	V_{CC}+0.3	V_{DC}
L-Level Input Voltage	V_{IL}	-	-	0.8	V_{DC}

4.7 DC Characteristics (Ta=+25°C, V_{CC}=+5.0V_{DC})

Table_7

Parameter	Symbol	Min.	Typ.	Max.	Unit
Supply Current *)	I_{CC}	-	620	870	mA
H-Level Input Current	I_{IH}	-	-	20	uA
L-Level Input Current	I_{IL}	-	-	-0.36	mA
Luminance	L	100	200	-	ft-L

*) The inrush current can be 5 times the specified max. supply current at power on.

4.8 AC Characteristics (Ta=+25°C, V_{CC}=+5.0V_{DC}, See Fig-1.)

Table_8

Parameter	Symbol	Min.	Max	Unit
Pulse width of WR	Tpw(WR)	50	-	ns
Set up time of /SEL	Tsu(/SEL)	50	-	ns
Holding time of /SEL	Th(/SEL)	50	-	ns
Set up time of data bus	Tsu(data)	100	-	ns
Holding time of data bus	Th(data)	100	-	ns
Delay time of BUSY	Tdelay	-	50	ns
Execution time of data	Texe	-	750	us
Wait time of next WR	Twait	50	-	ns

4.9 Timing Chart

4.9.1 Parallel Input Timing

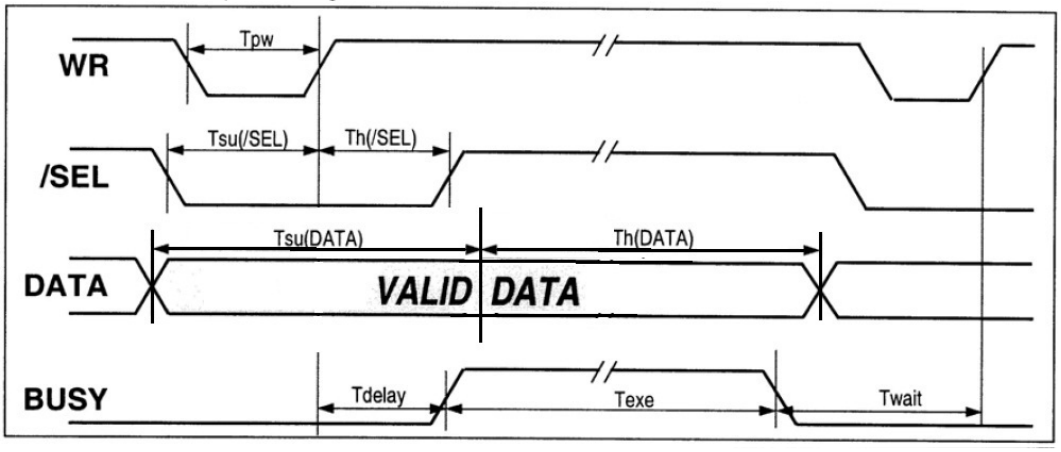

Fig-1. Parallel Input Timing Diagram

4.9.2 Serial Input Timing

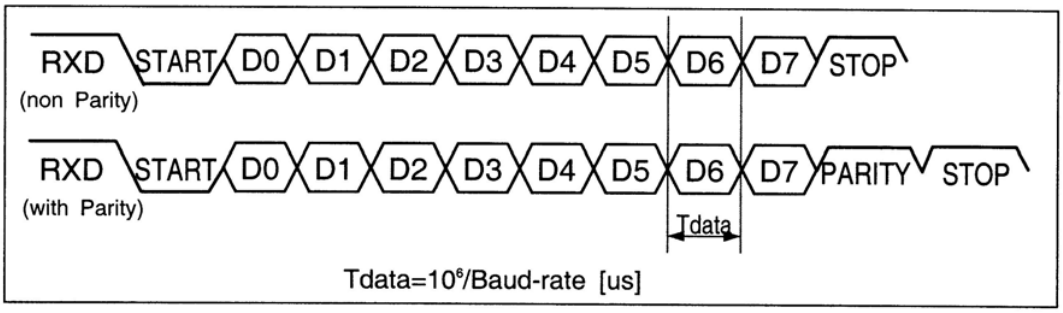

Fig-2 Serial Input Timing Diagram

In case of serial input mode, it is not necessary to check the BUSY signal because the execution time of data (Texe) is shorter than the input time of 1 byte serial data.
In this mode, BUSY signal always holds low state.

4.10 Signal Interfacing

(1) Parallel Interfacing

·Connector(Male) : BH-S16-FG
(16-Pin Dual Box Header, Straight)
→ Mate Socket(Female) : MIL-STD-16P

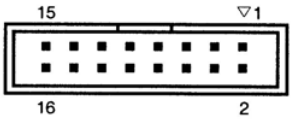

Table_9

Pin No.	Signal	Pin No.	Signal
1	**D7**	2	**D6**
3	**D5**	4	**D4**
5	**D3**	6	**D2**
7	**D1**	8	**D0**
9	**WR**	10	**/SEL**
11	**RXD/TO**	12	**BUSY**
13	**GND**	14	**GND**
15	**Vcc**	16	**Vcc**

4.11 System Block Diagram

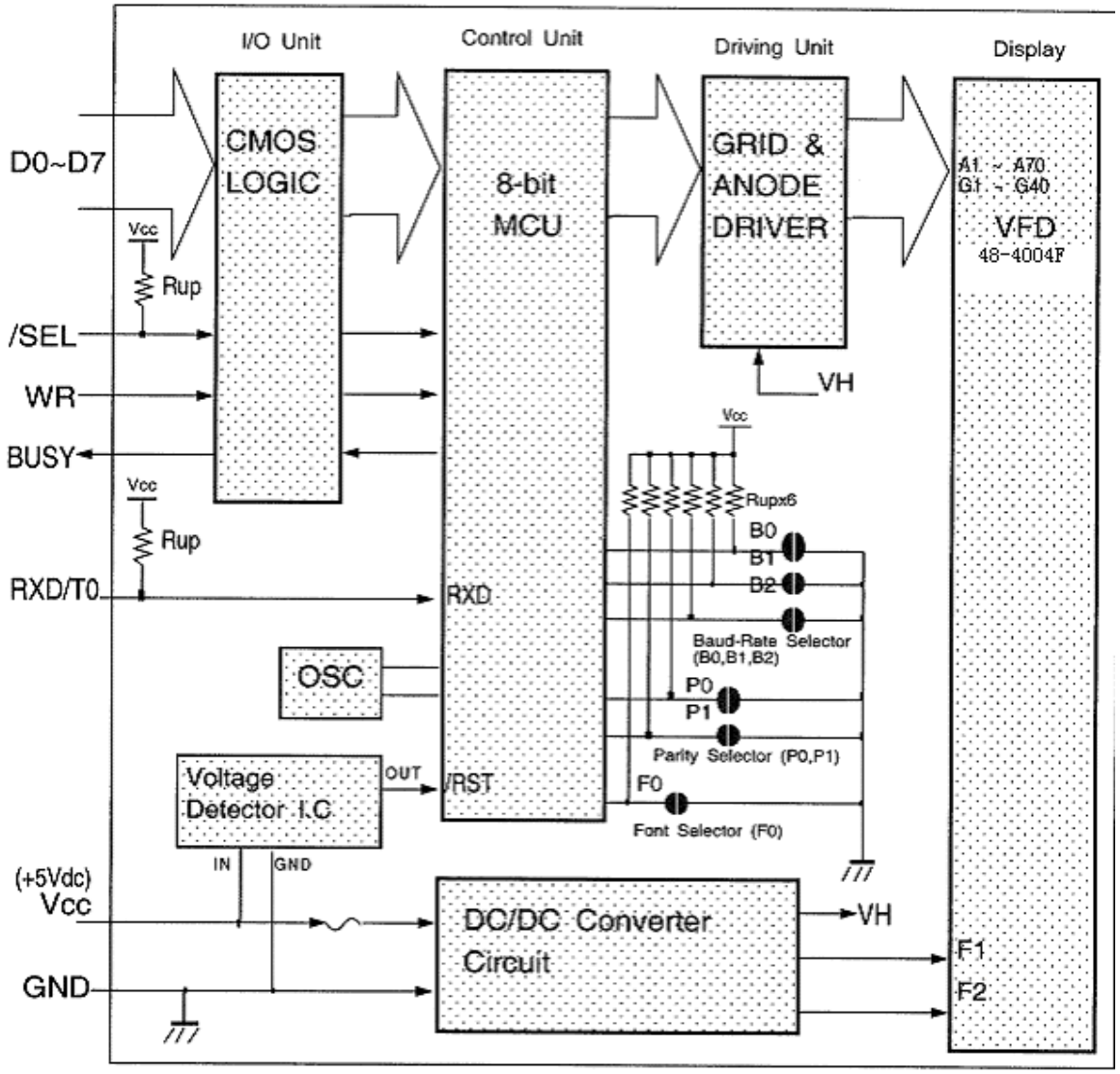

Fig-3. VFD Module System Block Diagram

4.12 Outer Dimensions

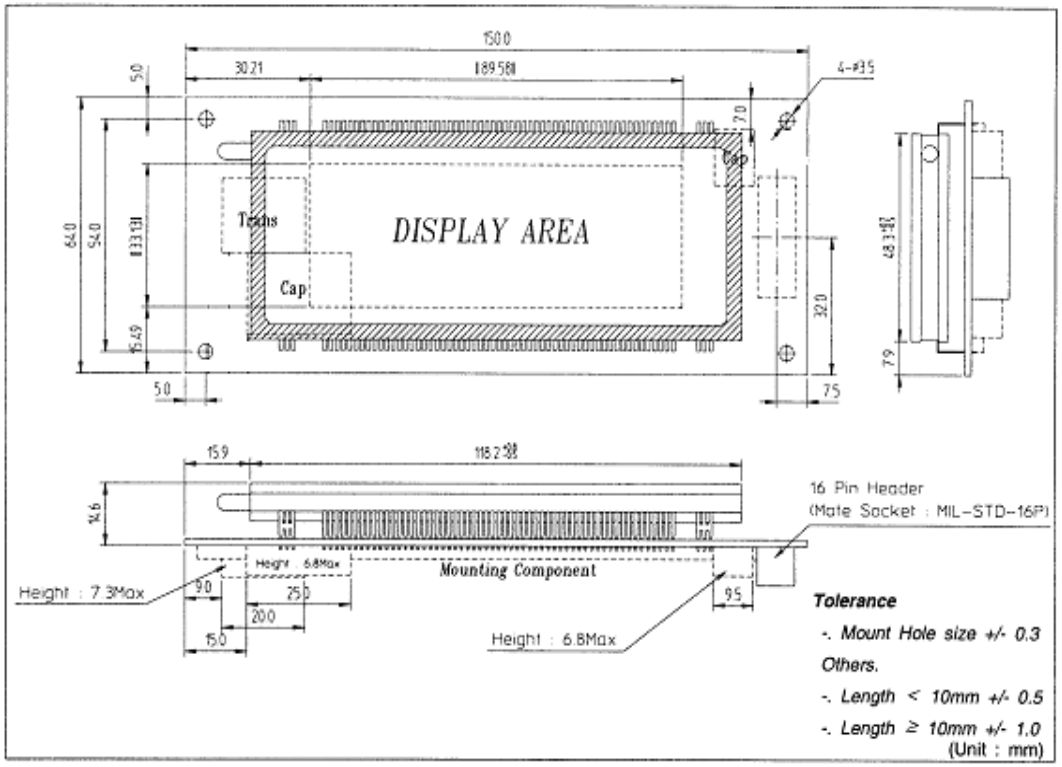

Fig-4. Outer Dimensions

4.13 Pattern Details

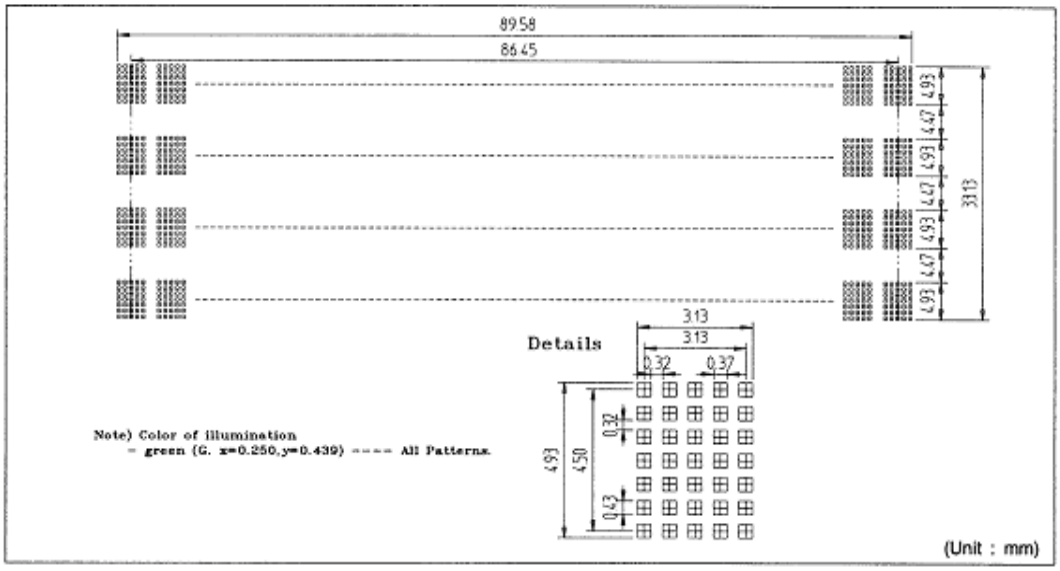

Fig-5. Pattern Details

5. FUNCTIONS

The module has data and control code write-in, self test and power on reset function. When the data is being written-in, the BUSY signal is active (High) which indicates that the module is processing the data.

Data and Control Code Write-in Table

Table_10

WR	/SEL	Function
0 to 1	0	Data and Control Code is written-in.
x	1	No Operation

5.1 Character Data Write-in

When the character data code (20 Hex ~ FF Hex) is transferred to the module, the character font is displayed on the screen. At this time, the cursor will be shifted to the right one digit automatically.

5.2 Control Code Write-in

The control commands are available as follows and details are will be explained.

(1) BS : Back Space ..... 08 Hex
(2) HT : Horizontal Tab ..... 09 Hex
(3) LF : Line Feed ..... 0A Hex
(4) CH : Cursor Home ..... 0C Hex
(5) CR : Carriage Return ..... 0D Hex
(6) CLR : Clear Display ..... 0E Hex
(7) DC1 : Normal Display Mode ..... 11 Hex
(8) DC2 : Over Write Mode ..... 12 Hex
(9) DC3 : Horizontal Scroll Mode ..... 13 Hex
(10) DC4 : Cursor Off Mode ..... 14 Hex
(11) DC5 : All Dot Cursor Blinking Mode ..... 15 Hex
(12) DC6 : Cursor Off Mode ..... 16 Hex
(13) DC7 : Cursor Off Mode ..... 17 Hex
(14) CT0 : General European Font ..... 18 Hex
(15) CT1 : Japanese Katakana Font ..... 19 Hex
(16) ESC : Escape Sequence ..... 1B Hex

[16-1] UDF : Save a User Definable Character ..... 1B Hex + 43 Hex
[16-2] DP : Display Position ..... 1B Hex + 48 Hex
[16-3] DIM : Dimming ..... 1B Hex + 4C Hex
[16-4] BSC : Blink Speed Control ..... 1B Hex + 54 Hex
[16-5] RST : Reset (Initialization) ..... 1B Hex + 49 Hex

5.2.1 BS (08 Hex) : Back Space

The write-in position is shifted to the left one digit. When the write-in position is on the most significant digit (left-end digit), the cursor doesn't move.

5.2.2 HT (09 Hex) : Horizontal Tab

The write-in position is shifted to the right one digit.
When the write-in position is on the least significant digit(right-end digit), the cursor motion depends on DC1, DC2 and DC3 mode.

DC1 Mode : The write-in position moves to the most significant digit.
DC2 Mode : The write-in position doesn't move.
DC3 Mode : All the characters displayed are shifted to the left one digit and the right-end digit is cleared.

5.2.3 LF (0A Hex) : Line Feed

All the characters displayed are cleared and the cursor doesn't move.

5.2.4 CH (0C Hex) : Cursor Home
The cursor moves to the most significant digit.

5.2.5 CR (0D Hex) : Carriage Return
The cursor moves to the most significant digit.

5.2.6 CLR (0E Hex) : Clear
All the characters displyed are cleared and the cursor doesn't move.

DC1~DC3 select the display mode. When the power is turned on, DC1 mode is selected defaultly and will be held until another mode (DC2 or DC3 Mode) is selected.

5.2.7 DC1 (11 Hex) : Normal Display Mode
After writing a character, the write-in position is shifted to the right one digit automatically. When the write-in position is on the least significant digit, the cursor moves to the most significant digit.

5.2.8 DC2 (12 Hex) : Over Write Mode
When the write-in position is on the least significant digit, a new character is written on the right-end digit and the write-in position is fixed on the right-end digit.

5.2.9 DC3 (13 Hex) : Horizontal Scroll Mode
When the write-in position is on the least significant digit, all the characters displayed are shifted to the left one digit and a new character is written on the right-end digit. The write-in position is stayed on the right-end digit. At this time, if DC1 or DC2 mode is selected then the cursor moves to the left-end digit.

DC4~DC7 are the cursor control command. In case of DC5, the blinking speed can be varied by ESC sequence. (See section 5.2.16-[4] Blinking Speed Control.) When the power is turned on, DC4 mode is defaultly selected and will be held until another mode (DC5~DC7) is selected.

5.2.10 DC4 (14 Hex) : Cursor Off Mode
The cursor won't be displayed.

5.2.11 DC5 (15 Hex) : All Dot Cursor Blinking Mode
The cursor is displayed as a blinking all dot cursor.

5.2.12 DC6 (16 Hex) : Cursor off Mode
The cursor won't be displayed.

5.2.13 DC7 (17 Hex) : Cursor off Mode
The cursor won't be displayed.

CTO and CT1 select the character font table. When the power is turned on, CTO is defaultly selected and will be held until the other table is selected as below.

5.2.14 CTO (18 Hex) : General European Font Table
The CT0 Font table (See Table_14.1 on page 13/14) is selected.

5.2.15 CT1 (19 Hex) : Japanese Katakana Font Table
The CT1 Font table (See Table_14.2 on page 14/14) is selected.

5.2.16 ESC (1B Hex) : Escape Sequence
This command is used to define font, move cursor, change luminance, blinking speed control and/or initialize the module.

[1] UDF (43 Hex) : Save a User Definable Font
The characters can be designed by using this command. These font data are momorized in the RAM of the module.

Syntax : ESC(1B Hex) + "C"(43 Hex) + CHR(00~1F Hex) + PT1+PT2+PT3+PT4+PT5

Any 5x7 dots patten consisted of data form PT1 through PT5 (4th~8th byte) can be stored in the character code location specified by CHR (3rd byte).

And the maximum kinds of UDFs (User Definable Font) are 16 characters at once. Storing more than 16 will kill the oldest font. However within 16 characters codes where already defined by UDF, the over-write-latest font replaces the former font.

- *1st byte : ESC (1B Hex)* ..... Specify Escape command.
- *2nd byte : "C"(43 Hex)* ..... Specify User-Definable-Font Command.
- *3rd byte : CHR (00 Hex~1F Hex)* ..... Specify the character code location from 00 Hex to FF Hex by CHR. If CHR overlaps control codes such as BS, HT, LF etc.,the control function will be lost. Therfore, overlaps to the ESC codes may not avail further UDF function.
- *4th~8th byte (00 Hex~FF Hex)* ..... Specify ON or OFF of 36 dot positions(5x7 dot). Table_11.1 shows the relation between dot position an data formation. The notation of "X.Y" means the Yth bit of Xth byte. For example,4.0 means LSB (Least Significant Bit) of 4th byte and 7.7 means MSB (Most Significant Bit) of 7th byte. ("1"=dot turn on, "0"=dot turn off)

Bit Map of 5x7 Dot Matrix

Table_11.1

4.0	4.1	4.2	4.3	4.4
4.5	4.6	4.7	5.0	5.1
5.2	5.3	5.4	5.5	5.6
5.7	6.0	6.1	6.2	6.3
6.4	6.5	6.6	6.7	7.0
7.1	7.2	7.3	7.4	7.5
7.6	7.7	8.0	8.1	8.2

*) 8.3~8.7 are don't care

(Example) In Case of "S"

Table_11.2

0	1	1	1	1	
1	0	0	0	0	·4th byte : 3E Hex
1	0	0	0	0	·5th byte : 04 Hex
0	1	1	1	0	·6th byte : 07 Hex
0	0	0	0	1	·7th byte : E1 Hex
0	0	0	0	1	·8th byte : 03 Hex
1	1	1	1	0	

[2] Display Position (48 Hex)

The cursor can be moved to any position of screen by following ESC sequence.

Syntax : ESC(1B Hex)+"H"(48 Hex) + Cursor Position Data (See Table_12)

Table_12

	Left End	2nd Column	3rd column	~~~~~~~~~	Right End
1st ROW	00 Hex	01 Hex	02 Hex	~~~~~~~~~	13 Hex
2nd ROW	14 Hex	15 Hex	16 Hex	~~~~~~~~~	27 Hex
3rd ROW	28 Hex	29 Hex	2A Hex	~~~~~~~~~	3B Hex
4th ROW	3C Hex	3D Hex	3E Hex	~~~~~~~~~	4F Hex

Just only the 00 Hex to 4F Hex are available as a cursor position data.
The others are ignored.

[3] Dimming (4C Hex)

the brightness level is set to 100%.

Syntax : ESC(1B Hex) + "L"(4C Hex) + Luminance Data(00 Hex~FF Hex)

[4] Blinking Speed Control (54 Hex)

Blinking speed of cursor can be varied by following sequence.

Syntax : ESC(1B Hex) + "T"(54 Hex) + Blinking Speed Data (00 Hex to FF Hex)

Blinking Speed Data = 00 Hex …… 256 (Data Value)
FF Hex …… 255
FE Hex …… 254
⋮ ⋮
01 Hex …… 1

Period of Blinking = Data Value x approx. 30ms.

When the power is turned on, blinking speed data is set to 14 Hex (Data Value=20).
i.e. The period of cursor blinking is set to 600 msec.

[5] Initialization (49 Hex)

All characters displayed and all setting factors are cleared by following ESC sequence.

Syntax : ESC (1B Hex) + "I" (49 Hex)

By executing the above sequence. Module is reset as following status.

1) All characters displayed are cleared.
2) Cursor position is located on the most significant digit.
3) Display mode is set to DC1 Mode (Normal Display Mode)
4) Cursor mode is set to DC4 Mode (Cursor Off Mode)
5) Cursor blinking period is set to 600 msec.
6) Character Font Table are set by Table_13.

S/W Short Function Table — Table_13

F0	P1	P0	B2	B1	B0	FUNCTION	
x	x	x	1	1	1	Band-Rate Selection	19,200 bps
x	x	x	1	1	0		9,600 bps
x	x	x	1	0	1		4,800 bps
x	x	x	1	0	0		2,400 bps
x	x	x	0	1	1		1,200 bps
x	x	x	0	1	0		600 bps
x	x	x	0	0	1		300 bps
x	x	x	0	0	0		300 bps
x	1	1	x	x	x	Parity Selection	Even Parity
x	1	0	x	x	x		Odd Parity
x	0	x	x	x	x		Non Parity
1	x	x	x	x	x	Character Font Selection	CT0
0	x	x	x	x	x		CT1
1	1	1	1	1	1	Setting at Factory	

Note) 0 : Short, 1 : Open, x : Don't Care

5.3 Self Test Mode

Self test starts when RXD/TO="0" is more than 100ms at power on or initialization.
During Self Test, all character fonts are displayed automatically and neither character data (20 Hex to FF Hex) nor control command (00 Hex to 1F Hex) is acceptable. To release this mode, RXD/TO must be set to "1"and the power must be turned on again.

5.4 Power on Reset

When the module is turned on, the display and memory are cleared and the module is initialized. The displaying status is the same as the status of initialization. (Refer to sction 5.2.16 [5].)

6. OPERATING RECOMMENDATIONS

6.1 Avoid appling excessive shock or vibration beyond the specification for the VFD module.

6.2 Since VFDs are made of glass material, careful handling is required.
i.e. Direct impact with hard material to the glass surface(especially exhaust tip) may crack the glass.

6.3 When mounting the VFD module to your system, leave a slight gap between the VFD glass and your front panel. The module should be mounted without stress to avoid flexing of the PCB.

6.4 Avoid plugging or unplugging the interface connection with the power on, otherwise it may cause the severe damage to input circuitry.

6.5 Slow starting power supply may cause non-operation because one chip micom won't be reset.

6.6 Exceeding any of maximum ratings may cause the permanent damage.

6.7 Since the VFD modules contain high voltage source, careful handling is required during powered on.

6.8 When the power is turned off, the capacitor does not discharge immediately.
The high voltage applied to the VFD must not contact to the ICs. And the short-circuit of mounted components on PCB within 30 seconds after power-off may cause damage to those.

6.9 The power supply must be capable of providing at least 10 times the rated current, because the surge current can be more than 5 times the specified current consumption when the power is turned on.

6.10 Avoid using the module where excessive noise interference is expected.
Noise may affects the interface signal and causes improper operation. And it is important to keep the length of the interface cable less than 50cm.

6.11 Since all VFD modules contain C-MOS ICs, anti-static handling procedures are always required.

"CT0" Font Table

Table_14.1

Upper / Lower	D7	0	0	0	0	0	0	0	0	1	1	1	1	1	1	1	1
	D6	0	0	0	0	1	1	1	1	0	0	0	0	1	1	1	1
	D5	0	0	1	1	0	0	1	1	0	0	1	1	0	0	1	1
	D4	0	1	0	1	0	1	0	1	0	1	0	1	0	1	0	1
D3 D2 D1 D0		0	1	2	3	4	5	6	7	8	9	A	B	C	D	E	F
0 0 0 0	0				0	@	P	`	p	Ε	Σ		°	Α	Ð	ą	ó
0 0 0 1	1		DC1	!	1	A	Q	a	q	°	ρ	¡	±	Á	Ñ	á	ñ
0 0 1 0	2		DC2	"	2	B	R	b	r	ƒ	≡	¢	²	Â	Ò	ą	ò
0 0 1 1	3		DC3	#	3	C	S	c	s	ˡ	x	£	³	Ã	Ó	ą	ó
0 1 0 0	4		DC4	$	4	D	T	d	t	L	÷	¤	´	Ä	Ô	ą	ô
0 1 0 1	5		DC5	%	5	E	U	e	u	α	°	¥	µ	Å	Õ	ą	ô
0 1 1 0	6		DC6	&	6	F	V	f	v	γ	ς	¦	¶	Æ	Ö	æ	ö
0 1 1 1	7		DC7	'	7	G	W	g	w	δ	Ε	§	·	Ç	X	ç	÷
1 0 0 0	8	BS	CT0	(	8	H	X	h	x	ε	∠	¨	¸	È	Ø	è	ø
1 0 0 1	9	HT	CT1	)	9	I	Y	i	y	η	≥	©	¹	É	Ù	é	ù
1 0 1 0	A	LF		*	:	J	Z	j	z	θ	∓	ª	º	Ê	Ú	ê	ú
1 0 1 1	B		ESC	+	;	K	[	k	{	λ	Γ	«	»	Ë	Û	ë	û
1 1 0 0	C	CH		,	<	L	\	l	|	μ	ª	¬	¼	Ì	Ü	ì	ü
1 1 0 1	D	CR		-	=	M	]	m	}	τ	∫		½	Í	Ý	í	ý
1 1 1 0	E	CLR		.	>	N	^	n	~	φ	∞	®	▒	Î	Þ	ì	þ
1 1 1 1	F			/	?	O	_	o	°	ο	∑	¯	¿	Ï	ß	ì	ÿ

"CT1" Font Table

Table 14.2

Upper / Lower	D7	0	0	0	0	0	0	0	0	1	1	1	1	1	1	1	1
	D6	0	0	0	0	1	1	1	1	0	0	0	0	1	1	1	1
	D5	0	0	1	1	0	0	1	1	0	0	1	1	0	0	1	1
	D4	0	1	0	1	0	1	0	1	0	1	0	1	0	1	0	1
D3 D2 D1 D0		0	1	2	3	4	5	6	7	8	9	A	B	C	D	E	F
0 0 0 0	0				0	@	P	`	p	ア	ー	タ	ミ	日			
0 0 0 1	1		DC1	!	1	A	Q	a	q	イ	ア	チ	ム	月			
0 0 1 0	2		DC2	"	2	B	R	b	r	ウ	イ	ツ	メ	火			
0 0 1 1	3		DC3	#	3	C	S	c	s	エ	ウ	テ	モ	水			
0 1 0 0	4		DC4	$	4	D	T	d	t	オ	エ	ト	ヤ	木			
0 1 0 1	5		DC5	%	5	E	U	e	u	カ	オ	ナ	ユ	金			
0 1 1 0	6		DC6	&	6	F	V	f	v	キ	カ	ニ	ヨ	土			
0 1 1 1	7		DC7	'	7	G	W	g	w	ク	キ	ヌ	ラ	日			
1 0 0 0	8	BS	CT0	(	8	H	X	h	x	ケ	ク	ネ	リ	年			
1 0 0 1	9	HT	CT1	)	9	I	Y	i	y	コ	ケ	ノ	ル	円			
1 0 1 0	A	LF		*	:	J	Z	j	z	サ	コ	ハ	レ	七			
1 0 1 1	B		ESC	+	;	K	[	k	{	シ	サ	ヒ	ロ	入			
1 1 0 0	C	CH		,	<	L	¥	l	|	ス	シ	フ	ワ	中			
1 1 0 1	D	CR		-	=	M	]	m	}	セ	ス	ヘ	ン	口			
1 1 1 0	E	CLR		.	>	N	^	n	~	ソ	セ	ホ	゛	十			
1 1 1 1	F			/	?	O	_	o	ゃ	タ	ソ	マ	゜	◇			

ООО «ЛайфЭлектроникс» “LifeElectronics” LLC

ИНН 7805602321 КПП 780501001 Р/С 40702810122510004610 ФАКБ "АБСОЛЮТ БАНК" (ЗАО) в г.Санкт-Петербурге К/С 30101810900000000703 БИК 044030703

Компания «Life Electronics» занимается поставками электронных компонентов импортного и отечественного производства от производителей и со складов крупных дистрибьюторов Европы, Америки и Азии.

С конца 2013 года компания активно расширяет линейку поставок компонентов по направлению коаксиальный кабель, кварцевые генераторы и конденсаторы (керамические, пленочные, электролитические), за счёт заключения дистрибьюторских договоров

Мы предлагаем:

- *Конкурентоспособные цены и скидки постоянным клиентам.*
- *Специальные условия для постоянных клиентов.*
- *Подбор аналогов.*
- *Поставку компонентов в любых объемах, удовлетворяющих вашим потребностям.*

- *Приемлемые сроки поставки, возможна ускоренная поставка.*
- *Доставку товара в любую точку России и стран СНГ.*
- *Комплексную поставку.*
- *Работу по проектам и поставку образцов.*
- *Формирование склада под заказчика.*

- *Сертификаты соответствия на поставляемую продукцию (по желанию клиента).*
- *Тестирование поставляемой продукции.*
- *Поставку компонентов, требующих военную и космическую приемку.*
- *Входной контроль качества.*
- *Наличие сертификата ISO.*

В составе нашей компании организован Конструкторский отдел, призванный помогать разработчикам, и инженерам.

Конструкторский отдел помогает осуществить:

- *Регистрацию проекта у производителя компонентов.*
- *Техническую поддержку проекта.*
- *Защиту от снятия компонента с производства.*
- *Оценку стоимости проекта по компонентам.*
- *Изготовление тестовой платы монтаж и пусконаладочные работы.*

Тел: +7 (812) 336 43 04 (многоканальный)
Email: org@lifeelectronics.ru

www.lifeelectronics.ru