THIS DRAWING IS UNPUBLISHED. RELEASED FOR PUBLICATION –,– .
© COPYRIGHT 2010 BY TYCO ELECTRONICS CORPORATION. ALL RIGHTS RESERVED.

| LOC | DIST |
|---|---|
| DW | — |

REVISIONS

| P | LTR | DESCRIPTION | DATE | DWN | APVD |
|---|---|---|---|---|---|
| | B2 | REVISED (ECR-12-009552) | 21MAY'12 | JC | WK |

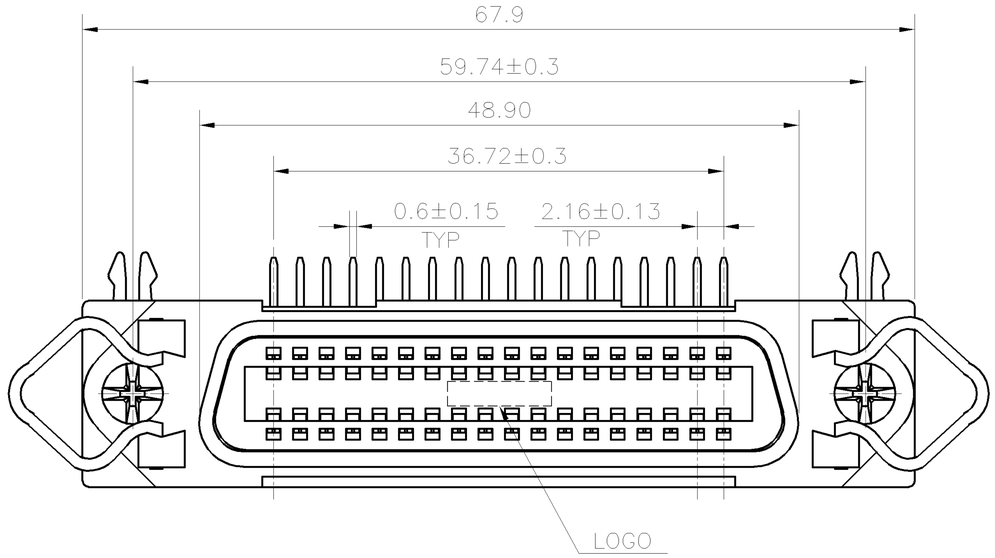


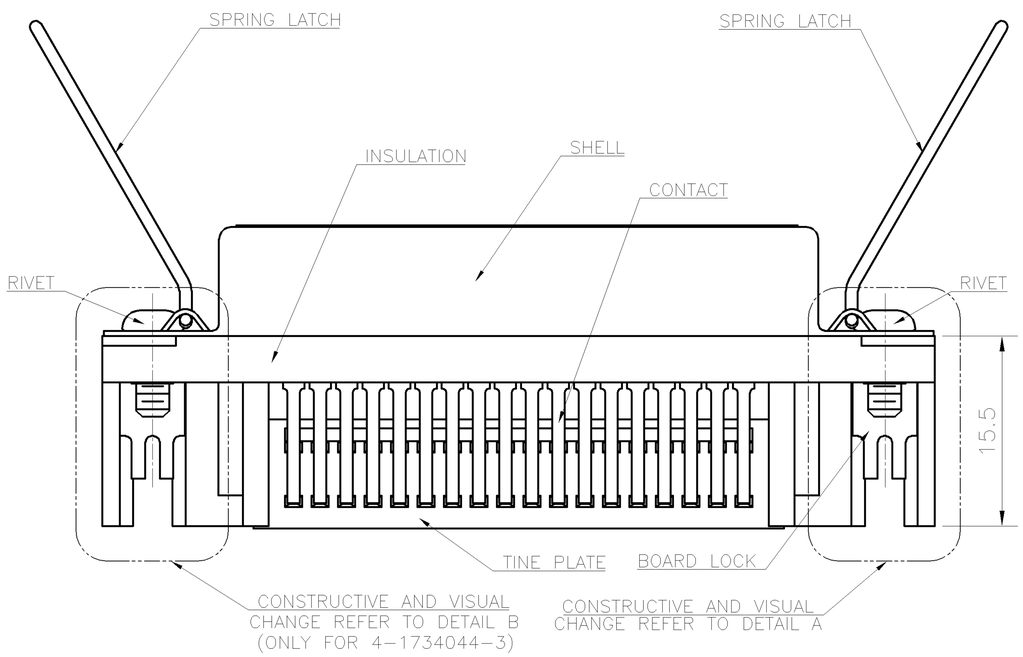


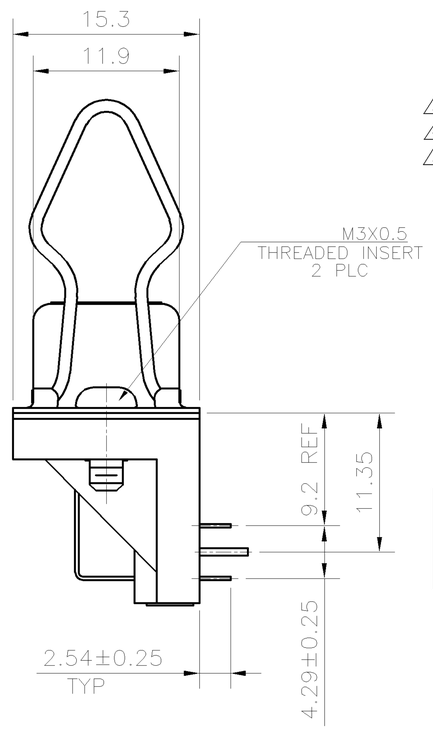


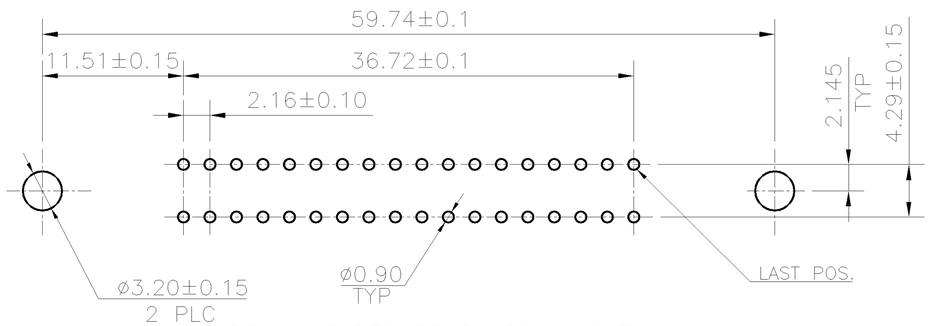


RECOMMENDED PC BOARD LAYOUT

NOTE:
1. MATERIAL:
   HOUSING: THERMOPLASTIC WITH GLASS-FIBER FILLED, UL 94V-0 RATED, COLOR: SEE TABLE.
   TINE PLATE: THERMOPLASTIC WITH GLASS-FIBER FILLED, UL 94V-0 RATED, COLOR: SEE TABLE
   CONTACTS: COPPER ALLOY.
   BOARD LOCK: BRASS.
   SPRING LATCH: STAINLESS STEEL
   SHELL: STEEL.
   RIVET: BRASS.
2. FINISH:
   CONTACT: (SEE TABLE) GOLD PLATING ON CONTACT AREA, 2.54μm [100μ"] MIN. TIN-CU ON SOLDER TAIL, 1.27μm [50μ"] MIN. NICKEL UNDERPLATED ALL OVER.
   SHELL: 1.27μm [50μ"] MIN. NICKEL PLATED.
   BOARD LOCK: 3.81μm [150μ"] MIN. TIN-CU PLATED.
   RIVET: 1.27μm [50μ"] MIN. NICKEL PLATED.
3. SEE SHEET 4 FOR DIFFERENT POINT EXPLANATION.
4. SEE SHEET 3 FOR DIFFERENT POINT EXPLANATION.
5. SEE SHEET 4 FOR DIFFERENT POINT EXPLANATION.

| | GROUND TABS | HOUSING & TINE PLATE COLOR | LOCK TYPE | MIN. THICKNESS | PART NUMBER |
|---|---|---|---|---|---|
| | W/O | BLACK | 5 | GOLD FLASH | 5-1734044-3 |
| | W/O | BLACK | 4 | GOLD FLASH | 4-1734044-3 |
| OBSOLETED | W/ | BLACK | 3 RIVET(M3) | 0.381um [15u"] | 3-1734044-3 |
| | W/O | BURGUNDY | SCREW | 0.381um [15u"] | 2-1734044-1 |
| | W/O | BLACK | 3 RIVET(M3) | 0.381um [15u"] | 1-1734044-3 |
| | W/O | BLACK | RIVET | 0.381um [15u"] | 1-1734044-2 |
| | W/O | BLACK | SCREW | 0.381um [15u"] | 1-1734044-1 |
| | W/O | BLACK | 3 RIVET(M3) | GOLD FLASH | 1734044-3 |
| | W/O | BLACK | RIVET | GOLD FLASH | 1734044-2 |
| | W/O | BLACK | SCREW | GOLD FLASH | 1734044-1 |

THIS DRAWING IS A CONTROLLED DOCUMENT.

DIMENSIONS: mm

TOLERANCES UNLESS OTHERWISE SPECIFIED:

| | |
|---|---|
| 0 PLC | ± 0.38 |
| 1 PLC | ± 0.25 |
| 2 PLC | ± 0.13 |
| 3 PLC | ± 0.05 |
| 4 PLC | ± – |
| ANGLES | ± 3° |

MATERIAL: SEE NOTES

FINISH: SEE NOTES

| | | |
|---|---|---|
| DWN | S. CHIEN | 27OCT2008 |
| CHK | S. CHIEN | 27OCT2008 |
| APVD | W. KODAMA | 27OCT2008 |
| PRODUCT SPEC | 108-57098 | |
| APPLICATION SPEC | — | |
| WEIGHT | GRAMS | |

TE Connectivity

NAME: RECEPTACLE ASSEMBLY, 36P RIGHT ANGLE, CENTRONICS.

| SIZE | CAGE CODE | DRAWING NO | RESTRICTED TO |
|---|---|---|---|
| A3 | 00779 | C-1734044 | — |

CUSTOMER DRAWING | SCALE — | SHEET 1 OF 5 | REV B2

THIS DRAWING IS UNPUBLISHED. RELEASED FOR PUBLICATION -,- .
© COPYRIGHT 2010 BY TYCO ELECTRONICS CORPORATION. ALL RIGHTS RESERVED.

| LOC | DIST |
|---|---|
| DW | — |

REVISIONS

| P | LTR | DESCRIPTION | DATE | DWN | APVD |
|---|---|---|---|---|---|
| | | SEE SHEET 1. | | | |

DETAIL A

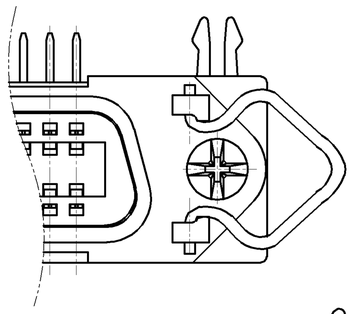

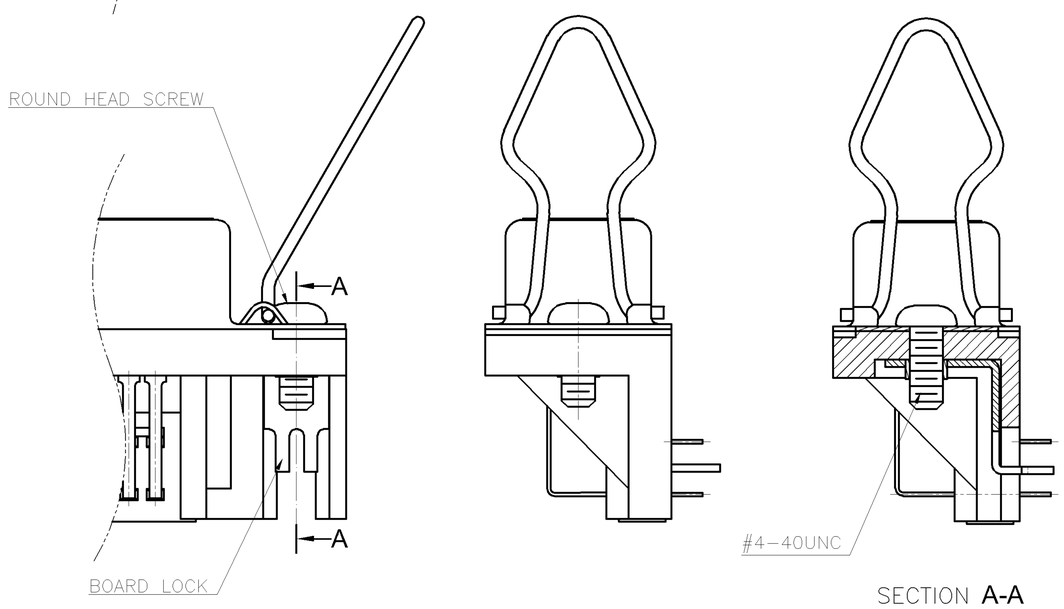


SECTION A-A

FOR X-1734044-1

DETAIL A

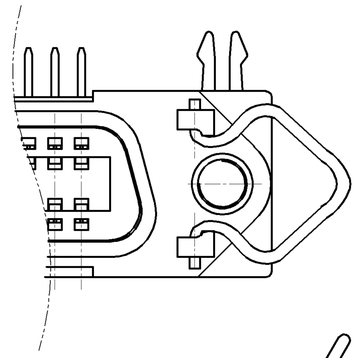

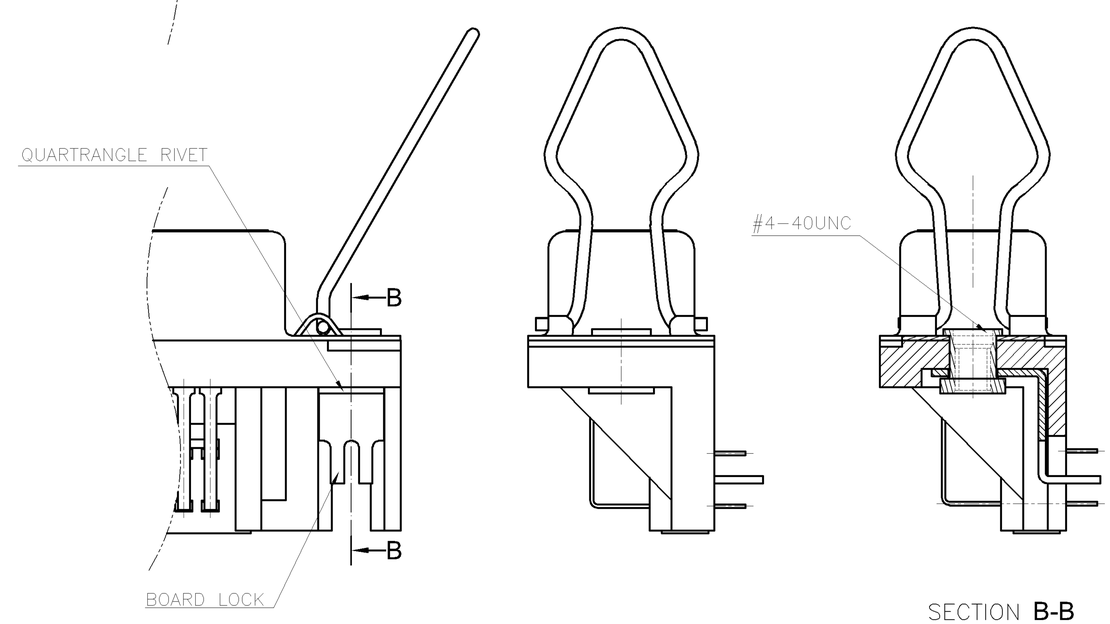


SECTION B-B

FOR X-1734044-2

THIS DRAWING IS A CONTROLLED DOCUMENT.

DIMENSIONS: mm

TOLERANCES UNLESS OTHERWISE SPECIFIED:

| | |
|---|---|
| 0 PLC | ± – |
| 1 PLC | ± – |
| 2 PLC | ± – |
| 3 PLC | ± – |
| 4 PLC | ± – |
| ANGLES | ± – |

MATERIAL –

FINISH –

DWN –
CHK –
APVD –
PRODUCT SPEC –
APPLICATION SPEC –
WEIGHT –

TE Connectivity

NAME

RECEPTACLE ASSEMBLY, 36P
RIGHT ANGLE, CENTRONICS.

| SIZE | CAGE CODE | DRAWING NO | RESTRICTED TO |
|---|---|---|---|
| A3 | 00779 | C-1734044 | — |

CUSTOMER DRAWING | SCALE — | SHEET 2 OF 5 | REV B2

THIS DRAWING IS UNPUBLISHED. RELEASED FOR PUBLICATION – , – .
© COPYRIGHT 2010 BY TYCO ELECTRONICS CORPORATION. ALL RIGHTS RESERVED.

| LOC | DIST |
|---|---|
| DW | – |

REVISIONS

| P | LTR | DESCRIPTION | DATE | DWN | APVD |
|---|---|---|---|---|---|
| | | SEE SHEET 1. | | | |

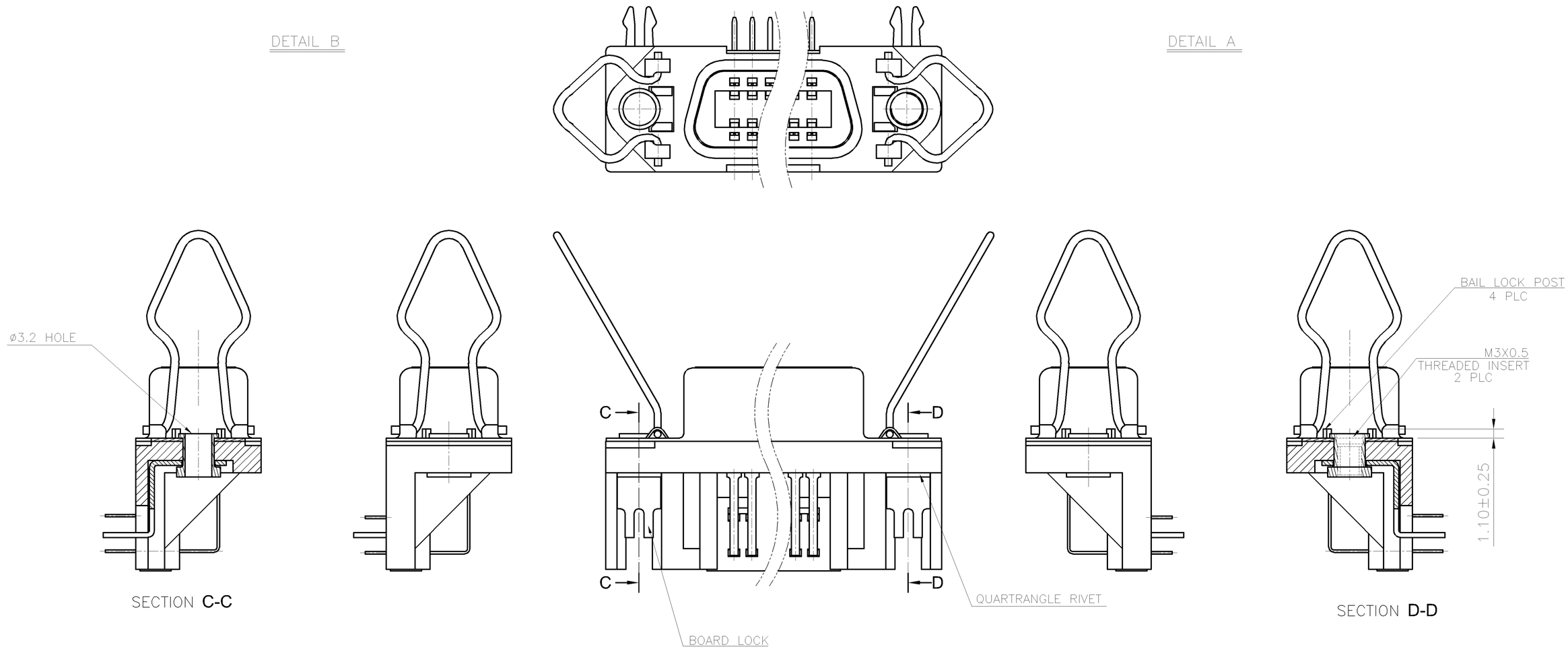


ONLY FOR 4–1734044–3 (4)

THIS DRAWING IS A CONTROLLED DOCUMENT.

DIMENSIONS: mm

TOLERANCES UNLESS OTHERWISE SPECIFIED:

| | |
|---|---|
| 0 PLC | ± – |
| 1 PLC | ± – |
| 2 PLC | ± – |
| 3 PLC | ± – |
| 4 PLC | ± – |
| ANGLES | ± – |

MATERIAL –

FINISH –

DWN –
CHK –
APVD –
PRODUCT SPEC –
APPLICATION SPEC –
WEIGHT –

TE Connectivity

NAME

RECEPTACLE ASSEMBLY, 36P
RIGHT ANGLE, CENTRONICS.

| SIZE | CAGE CODE | DRAWING NO | RESTRICTED TO |
|---|---|---|---|
| A3 | 00779 | C–1734044 | – |

CUSTOMER DRAWING | SCALE – | SHEET 3 OF 5 | REV B2

THIS DRAWING IS UNPUBLISHED. RELEASED FOR PUBLICATION – , – .
© COPYRIGHT 2010 BY TYCO ELECTRONICS CORPORATION. ALL RIGHTS RESERVED.

| LOC | DIST |
|---|---|
| DW | — |

REVISIONS

| P | LTR | DESCRIPTION | DATE | DWN | APVD |
|---|---|---|---|---|---|
| | | SEE SHEET 1. | | | |

DETAIL A

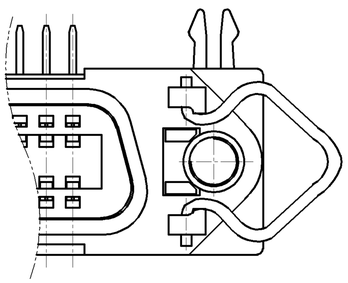

DETAIL A

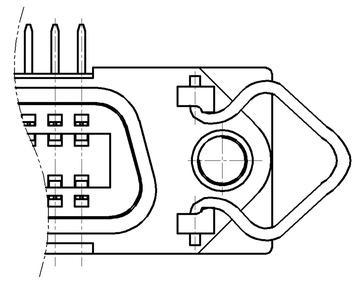

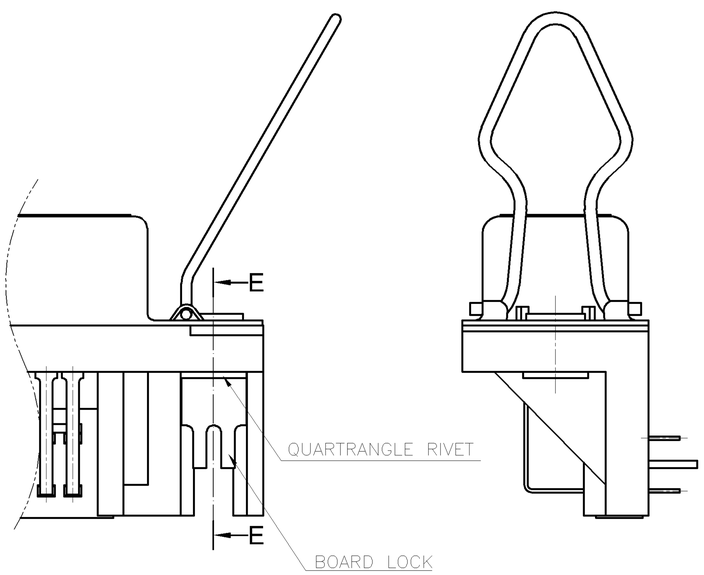


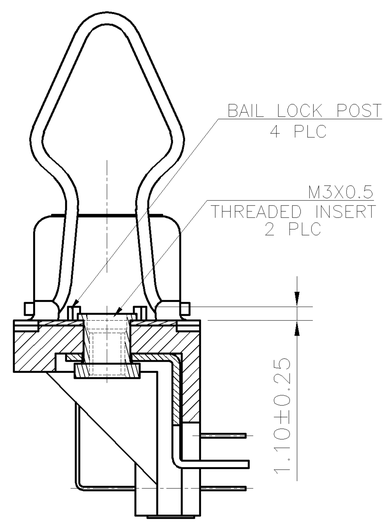


SECTION **E-E**

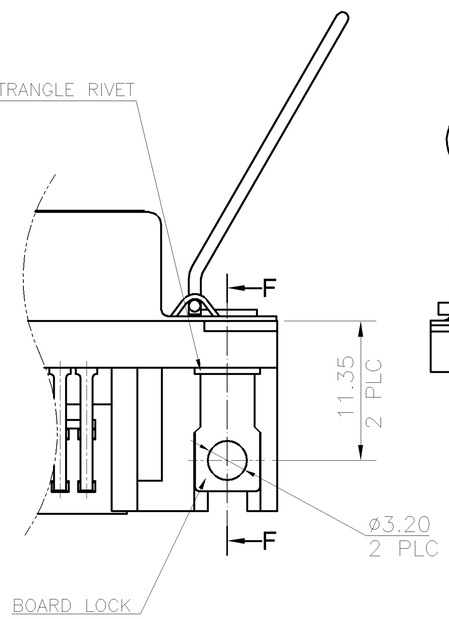


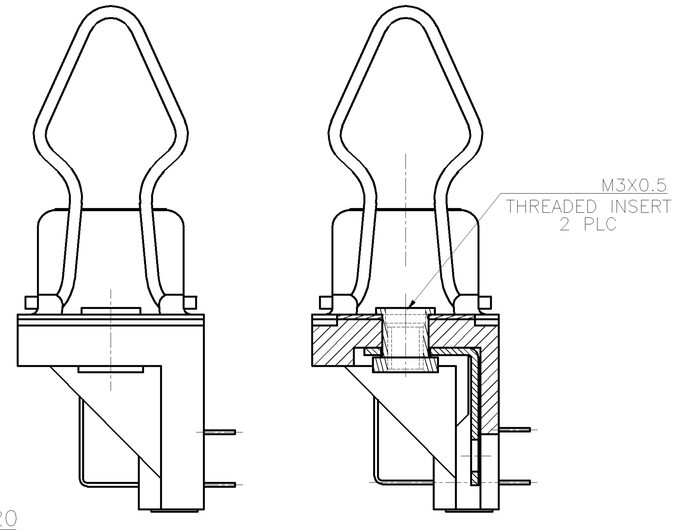


SECTION **F-F**

FOR 1734044–3, 1–1734044–3, 3–1734044–3 △3

ONLY FOR 5–1734044–3 △5

THIS DRAWING IS A CONTROLLED DOCUMENT.

DIMENSIONS: mm

TOLERANCES UNLESS OTHERWISE SPECIFIED:

| | |
|---|---|
| 0 PLC | ± 0.38 |
| 1 PLC | ± 0.25 |
| 2 PLC | ± 0.13 |
| 3 PLC | ± 0.05 |
| 4 PLC | ± – |
| ANGLES | ± 3° |

MATERIAL –

FINISH –

DWN –
CHK –
APVD –
PRODUCT SPEC —
APPLICATION SPEC —
WEIGHT —

CUSTOMER DRAWING

TE Connectivity

NAME

RECEPTACLE ASSEMBLY, 36P
RIGHT ANGLE, CENTRONICS.

| SIZE | CAGE CODE | DRAWING NO | RESTRICTED TO |
|---|---|---|---|
| A3 | 00779 | C–1734044 | — |

SCALE — SHEET 4 OF 5 REV B2

THIS DRAWING IS UNPUBLISHED. RELEASED FOR PUBLICATION –,– .
© COPYRIGHT 2010 BY TYCO ELECTRONICS CORPORATION. ALL RIGHTS RESERVED.

| LOC | DIST |
|---|---|
| DW | – |

REVISIONS

| P | LTR | DESCRIPTION | DATE | DWN | APVD |
|---|---|---|---|---|---|
| | | SEE SHEET 1. | | | |

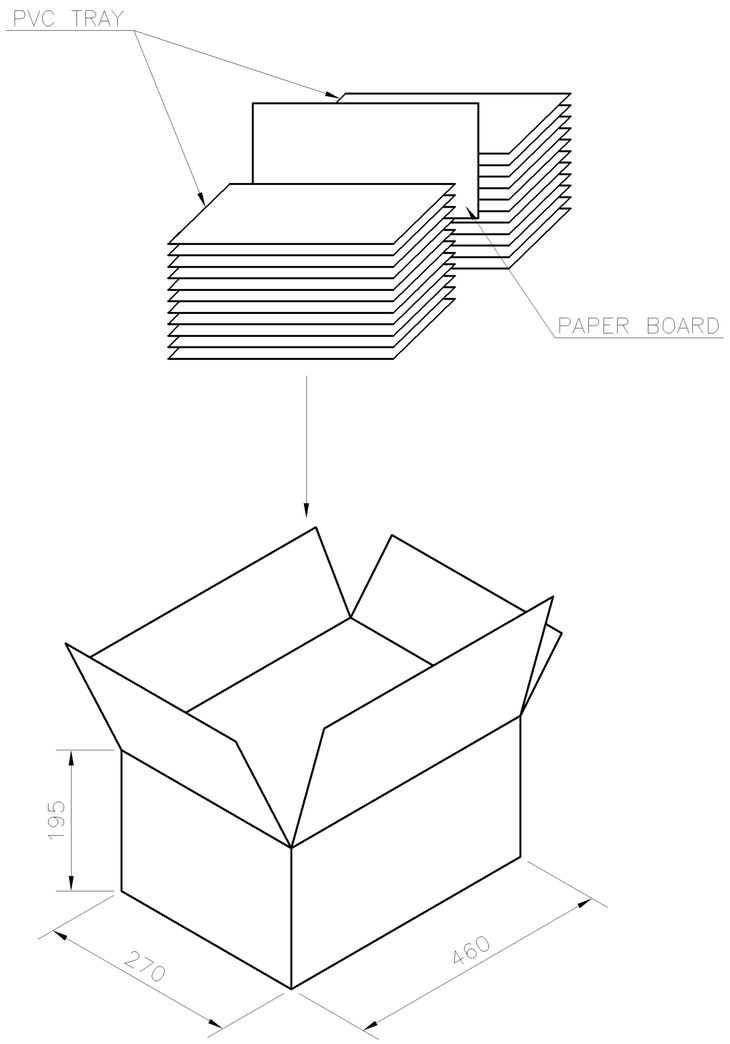


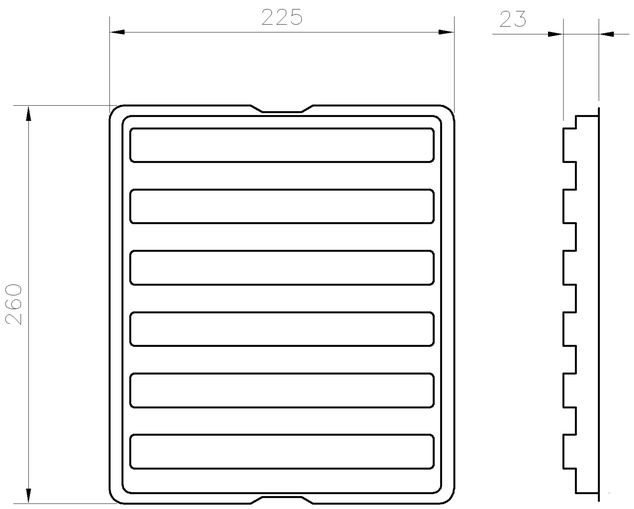


UPPER COVER

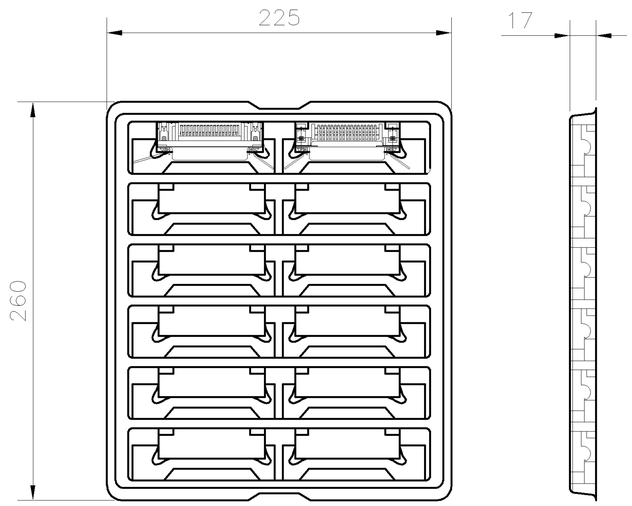


LOWER COVER

| 8.0 | 9.0 | 12 | 16 | 192 |
|---|---|---|---|---|
| NET WEIGHT (KGS) | GROSS WEIGHT (KGS) | PCS/ TRAY | TRAYS/ OUTER BOX | QUANTITY |

THIS DRAWING IS A CONTROLLED DOCUMENT.

DIMENSIONS: mm

TOLERANCES UNLESS OTHERWISE SPECIFIED:
0 PLC ± –
1 PLC ± –
2 PLC ± –
3 PLC ± –
4 PLC ± –
ANGLES ± –

MATERIAL –

FINISH –

DWN –
CHK –
APVD –
PRODUCT SPEC –
APPLICATION SPEC –
WEIGHT –

TE Connectivity

NAME
RECEPTACLE ASSEMBLY, 36P
RIGHT ANGLE, CENTRONICS.

| SIZE | CAGE CODE | DRAWING NO | RESTRICTED TO |
|---|---|---|---|
| A3 | 00779 | C-1734044 | – |

CUSTOMER DRAWING | SCALE – | SHEET 5 OF 5 | REV B2

ООО «ЛайфЭлектроникс» “LifeElectronics” LLC

ИНН 7805602321 КПП 780501001 Р/С 40702810122510004610 ФАКБ "АБСОЛЮТ БАНК" (ЗАО) в г.Санкт-Петербурге К/С 30101810900000000703 БИК 044030703

*Компания «Life Electronics» занимается поставками электронных компонентов импортного и отечественного производства от производителей и со складов крупных дистрибьюторов Европы, Америки и Азии.*

*С конца 2013 года компания активно расширяет линейку поставок компонентов по направлению коаксиальный кабель, кварцевые генераторы и конденсаторы (керамические, пленочные, электролитические), за счёт заключения дистрибьюторских договоров*

*Мы предлагаем:*

- *Конкурентоспособные цены и скидки постоянным клиентам.*
- *Специальные условия для постоянных клиентов.*
- *Подбор аналогов.*
- *Поставку компонентов в любых объемах, удовлетворяющих вашим потребностям.*

- *Приемлемые сроки поставки, возможна ускоренная поставка.*
- *Доставку товара в любую точку России и стран СНГ.*
- *Комплексную поставку.*
- *Работу по проектам и поставку образцов.*
- *Формирование склада под заказчика.*

- *Сертификаты соответствия на поставляемую продукцию (по желанию клиента).*
- *Тестирование поставляемой продукции.*
- *Поставку компонентов, требующих военную и космическую приемку.*
- *Входной контроль качества.*
- *Наличие сертификата ISO.*

*В составе нашей компании организован Конструкторский отдел, призванный помогать разработчикам, и инженерам.*

*Конструкторский отдел помогает осуществить:*

- *Регистрацию проекта у производителя компонентов.*
- *Техническую поддержку проекта.*
- *Защиту от снятия компонента с производства.*
- *Оценку стоимости проекта по компонентам.*
- *Изготовление тестовой платы монтаж и пусконаладочные работы.*

*Тел: +7 (812) 336 43 04 (многоканальный)*
*Email: org@lifeelectronics.ru*

***www.lifeelectronics.ru***