THIS DRAWING IS UNPUBLISHED. RELEASED FOR PUBLICATION 2013
© COPYRIGHT 2013 TE CONNECTIVITY ALL RIGHTS RESERVED.

LOC	DIST
GP	00

REVISIONS

P	LTR	DESCRIPTION	DATE	DWN	APVD
	I	PRELIMINARY	24SEP2013	ZJ	JY
	A	ACTIVE THE DRAWING	31DEC2013	ZJ	JY
	B	REVISED PER ECO-15-005721	4AUG2015	RG	SH
	D	REVISED PER ECO-19-004279	20MAR2019	TX	SH

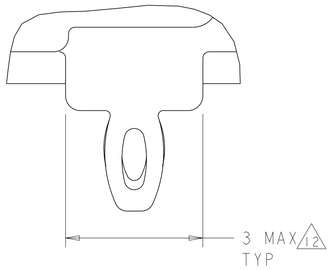

DETAIL S
SCALE 16:1

1. CAGE ASSEMBLY MATERIAL: NICKEL SILVER, 0.25 THICK
   HEAT SINK MATERIAL: ALUMINUM
   HEAT SINK CLIP MATERIAL: STAINLESS STEEL
   EMI SPRING MATERIAL: COPPER ALLOY
   FRONT FLANGE MATERIAL: ZINC ALLOY
2. PITCH BETWEEN PORTS OF ONE 1X4 CAGE ASSEMBLY.
3. SPACING BETWEEN CAGES ON THE SAME PC BOARD, TO BE SPECIFIED BY CUSTOMER, MUST COMPLY WITH MINIMUM DIMENSIONS SHOWN.
4. REFERENCE APPLICATION SPEC 114-13218 FOR RECOMMENDED DRILL HOLE DIAMETER AND PLATING THICKNESS.
5. DATUMS AND BASIC DIMENSIONS ESTABLISHED BY CUSTOMER.
6. DIMENSION C IS THE NOMINAL THICKNESS OF CUSTOMER SUPPLIED PC BOARD,
   SINGLE SIDED PC BOARD MINIMUM THICKNESS = 1.45mm
   DOUBLE SIDED PC BOARD MINIMUM THICKNESS = 2.2mm PER QSFP.
7. HEAT SINKS AND CLIPS SHIPPED ASSEMBLED TO CAGE ASSEMBLY. CAGE ASSEMBLY MAY BE PRESSED INTO THE PCB AS SHIPPED.
8. DATUM -A- IS TOP SURFACE OF PC BOARD.
9. DIMENSION APPLIES WITH MODULE INSERTED IN CAGE.
10. UNPLATED THRU HOLE.
11. MATES WITH QSFP MSA COMPATIBLE TRANSCEIVER.
12. SURFACE TRACES PERMITTED WITHIN THIS AREA EXCEPT WHERE CAGE STANDOFFS, SHOWN IN DETAIL A AND S , CONTACT PC BOARD.
13. BASELINE FOR THESE DIMENSIONS IS THE CENTER OF COMPLIANT PIN HOLE.
14. 2D BARCODE AND DATE CODE (YYWWD) MARKED ON SIDE OF CAGE.
15. REFERENCE APP SPEC 114-13218 FOR GASKET THICKNESS CALCULATION.
16. EMI SPRING FINISH: 2µm MINIMUM TIN
    FRONT FLANGE FINISH: 3µm MINIMUM TIN OVER 1.27µm MINIMUM NICKEL OVER 5.08µm MINIMUM COPPER.
    HEAT SINK FINISH: NICKEL.

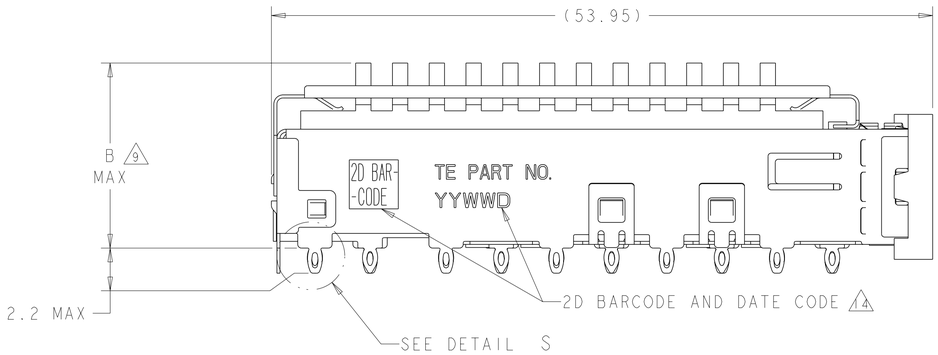

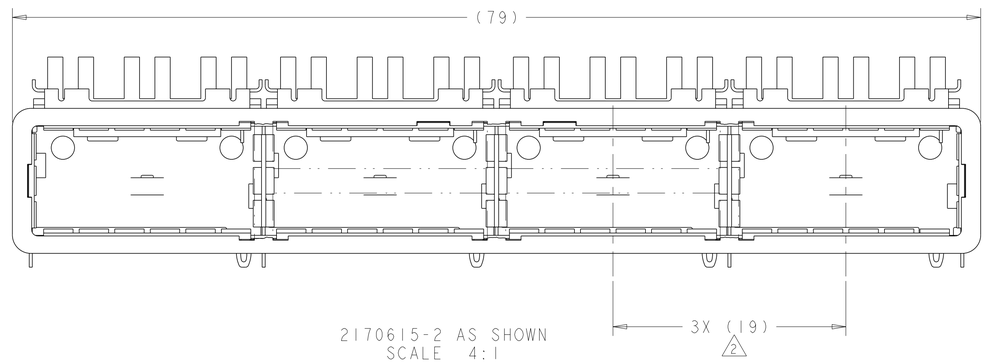

2170615-2 AS SHOWN
SCALE 4:1

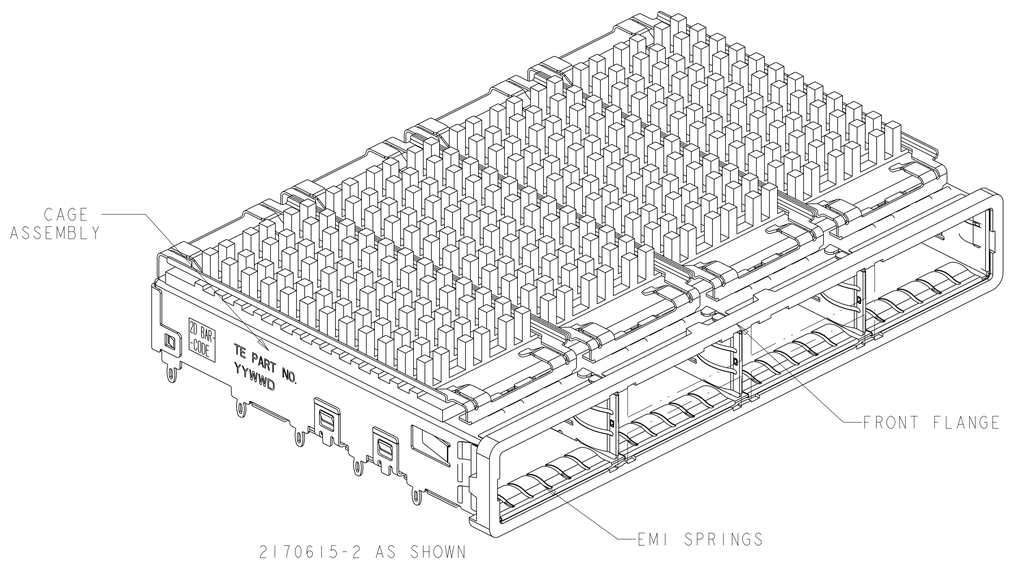

2170615-2 AS SHOWN

23.0	NETWORKING	2170615-4
16.0	SAN	2170615-2
13.7	PCI	2170615-1
B	HEAT SINK PROFILE	PART NUMBER

THIS DRAWING IS A CONTROLLED DOCUMENT.

DIMENSIONS: mm

TOLERANCES UNLESS OTHERWISE SPECIFIED:
0 PLC ±-
1 PLC ±0.1
2 PLC ±0.1
3 PLC ±-
4 PLC ±-
ANGLES ±-

MATERIAL - 1
FINISH 16

DWN ZJ 24SEP2013
CHK JY 24SEP2013
APVD MC 24SEP2013
PRODUCT SPEC 108-2286
APPLICATION SPEC 114-13218
WEIGHT -

TE Connectivity

NAME 1X4 CAGE ASSEMBLY, BEHIND BEZEL, W/ HEAT SINKS, QSFP
-

SIZE	CAGE CODE	DRAWING NO	RESTRICTED TO
A1	00779	C-2170615	-

Customer Drawing | SCALE 1:1 | SHEET 1 OF 6 | REV D

4805 (3/11)

THIS DRAWING IS UNPUBLISHED. RELEASED FOR PUBLICATION 2013
© COPYRIGHT 2013 TE CONNECTIVITY ALL RIGHTS RESERVED.

LOC	DIST
GP	00

REVISIONS

P	LTR	DESCRIPTION	DATE	DWN	APVD
	-	SEE SHEET 1	-	-	-

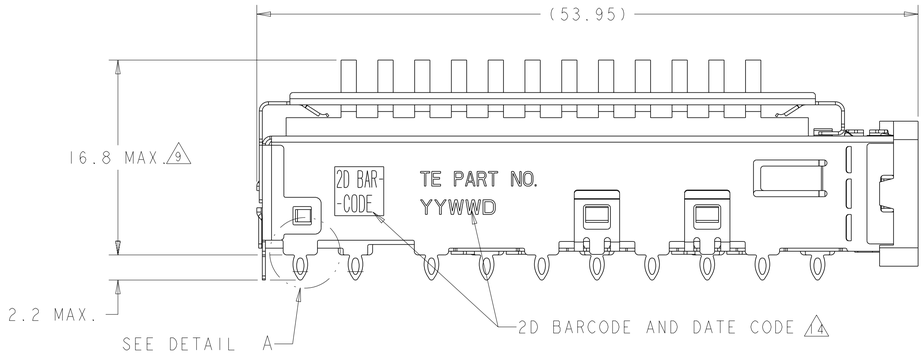

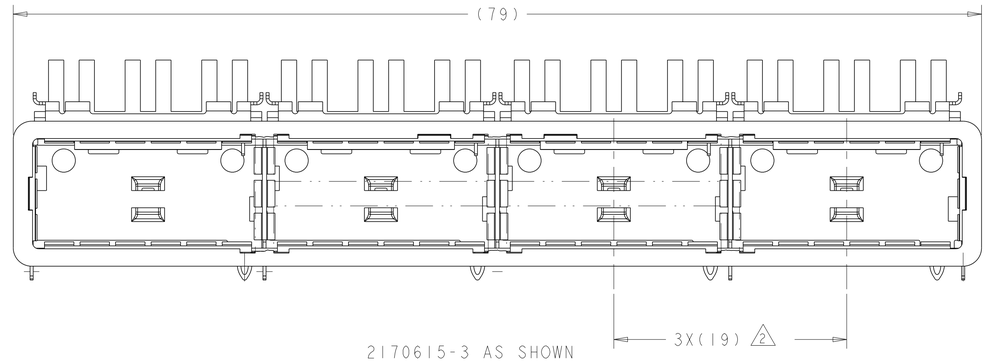

2170615-3 AS SHOWN

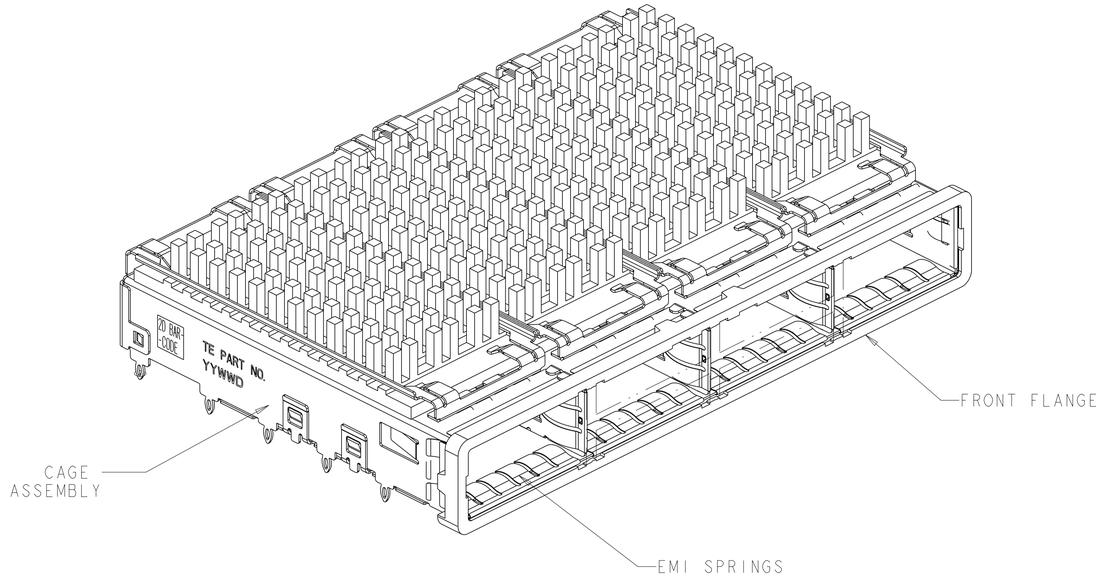

2170615-3 AS SHOWN

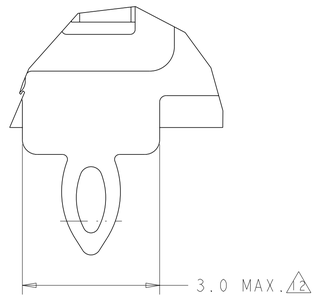

DETAIL A
SCALE 16:1

CUSTOMIZED	2170615-3
HEAT SINK PROFILE	PART NUMBER

THIS DRAWING IS A CONTROLLED DOCUMENT.

DIMENSIONS: mm

TOLERANCES UNLESS OTHERWISE SPECIFIED:
0 PLC ±-
1 PLC ±0.1
2 PLC ±0.1
3 PLC ±-
4 PLC ±-
ANGLES ±-

MATERIAL - -
FINISH - -

DWN	ZJ	24SEP2013
CHK	JY	24SEP2013
APVD	MK	24SEP2013

TE Connectivity

NAME: 1X4 CAGE ASSEMBLY, BEHIND BEZEL, W/ HEAT SINKS, QSFP

PRODUCT SPEC: 108-2286
APPLICATION SPEC: 114-13218
WEIGHT: -

SIZE	CAGE CODE	DRAWING NO	RESTRICTED TO
A1	00779	C-2170615	-

Customer Drawing | SCALE 1:1 | SHEET 2 OF 6 | REV D

4805 (3/11)

THIS DRAWING IS UNPUBLISHED. RELEASED FOR PUBLICATION 2013
© COPYRIGHT 2013 TE CONNECTIVITY ALL RIGHTS RESERVED.

LOC	DIST
GP	00

REVISIONS

P	LTR	DESCRIPTION	DATE	DWN	APVD
	-	SEE SHEET 1	-	-	-

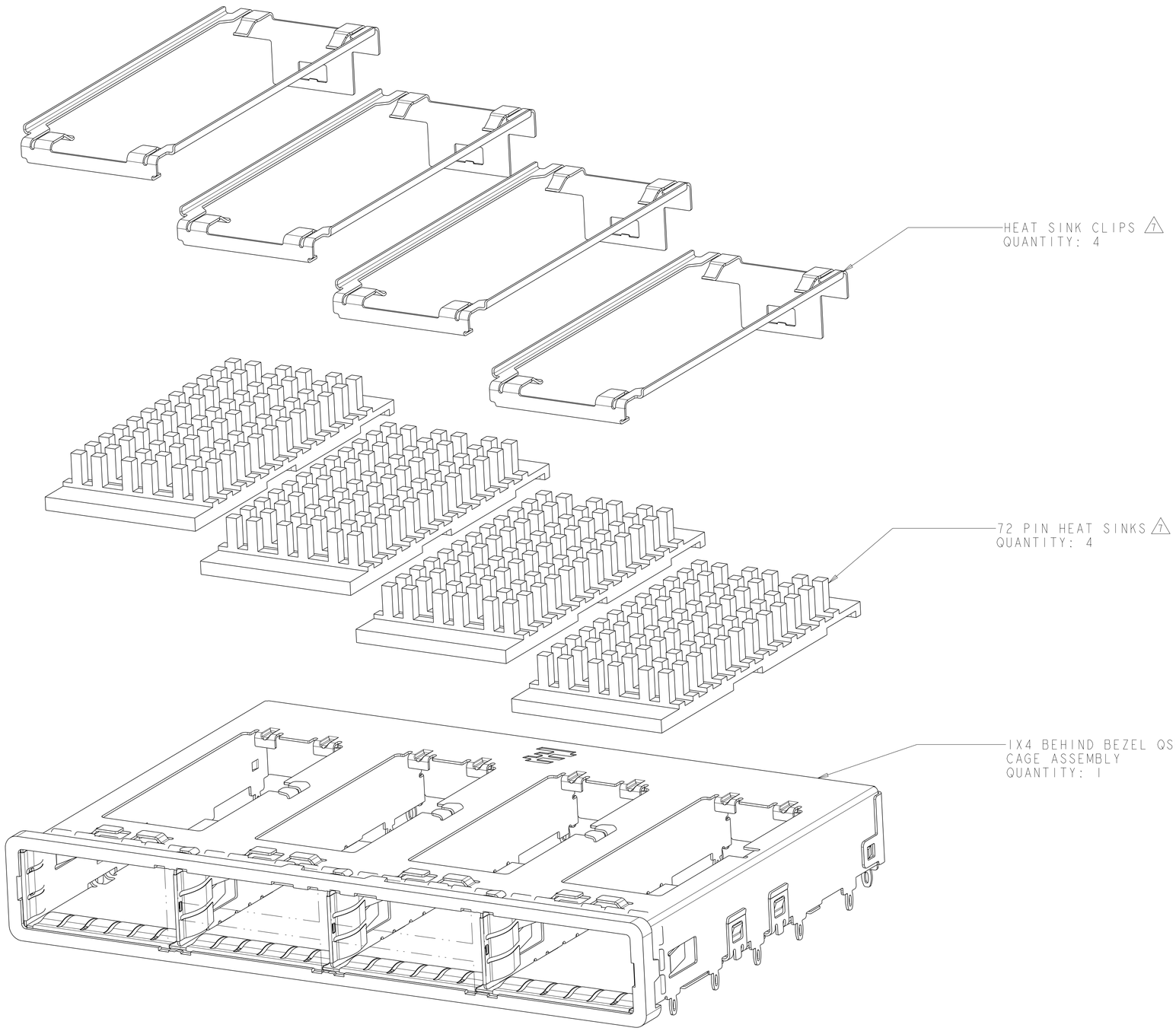

2170615-2 AS SHOWN

THIS DRAWING IS A CONTROLLED DOCUMENT.

DIMENSIONS: mm

TOLERANCES UNLESS OTHERWISE SPECIFIED:
0 PLC ±-
1 PLC ±0.1
2 PLC ±0.1
3 PLC ±-
4 PLC ±-
ANGLES ±-

MATERIAL - -
FINISH - -

DWN ZJ 24SEP2013
CHK JY 24SEP2013
APVD MC 24SEP2013

PRODUCT SPEC 108-2286
APPLICATION SPEC 114-13218
WEIGHT -

TE Connectivity

NAME 1X4 CAGE ASSEMBLY, BEHIND BEZEL, W/ HEAT SINKS, QSFP
-

SIZE	CAGE CODE	DRAWING NO	RESTRICTED TO
A1	00779	C-2170615	-

Customer Drawing SCALE 1:1 SHEET 3 OF 6 REV D

4805 (3/11)

THIS DRAWING IS UNPUBLISHED. RELEASED FOR PUBLICATION 2013
© COPYRIGHT 2013 TE CONNECTIVITY ALL RIGHTS RESERVED.

LOC	DIST
GP	00

REVISIONS

P	LTR	DESCRIPTION	DATE	DWN	APVD
	-	SEE SHEET 1	-	-	-

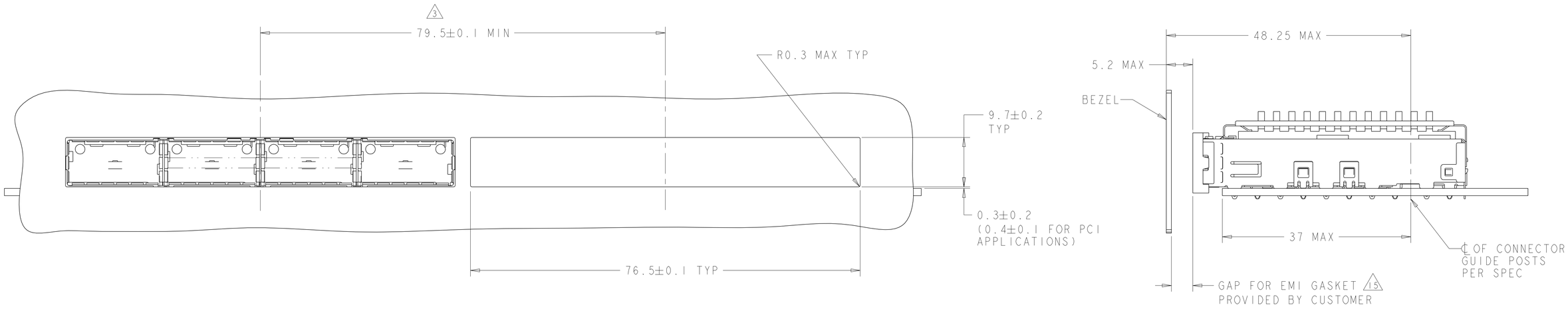

ONE SIDED CONFIGURATION
SCALE 5:2

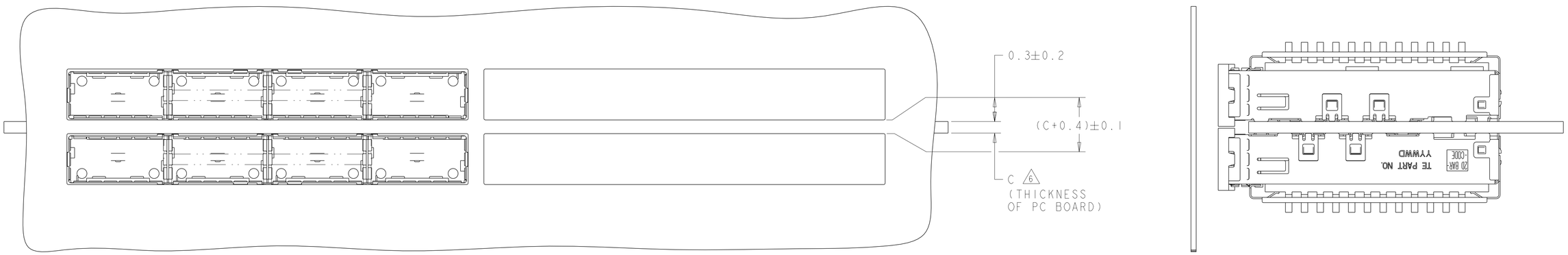

BELLY TO BELLY CONFIGURATION SIMILAR
TO ONE SIDED EXCEPT WHERE NOTED
SCALE 5:2

THIS DRAWING IS A CONTROLLED DOCUMENT.

DIMENSIONS: mm

TOLERANCES UNLESS OTHERWISE SPECIFIED:
0 PLC ±-
1 PLC ±0.1
2 PLC ±0.1
3 PLC ±-
4 PLC ±-
ANGLES ±-

MATERIAL - -
FINISH - -

DWN	ZJ	24SEP2013
CHK	JY	24SEP2013
APVD	MC	24SEP2013

PRODUCT SPEC 108-2286
APPLICATION SPEC 114-13218
WEIGHT -

TE Connectivity

NAME 1X4 CAGE ASSEMBLY, BEHIND BEZEL, W/ HEAT SINKS, QSFP -

SIZE	CAGE CODE	DRAWING NO	RESTRICTED TO
A1	00779	C-2170615	-

Customer Drawing | SCALE 1:1 | SHEET 4 OF 6 | REV D

4805 (3/11)

THIS DRAWING IS UNPUBLISHED. RELEASED FOR PUBLICATION 2013
© COPYRIGHT 2013 TE CONNECTIVITY ALL RIGHTS RESERVED.

LOC	DIST
GP	00

REVISIONS

P	LTR	DESCRIPTION	DATE	DWN	APVD
	-	SEE SHEET 1	-	-	-

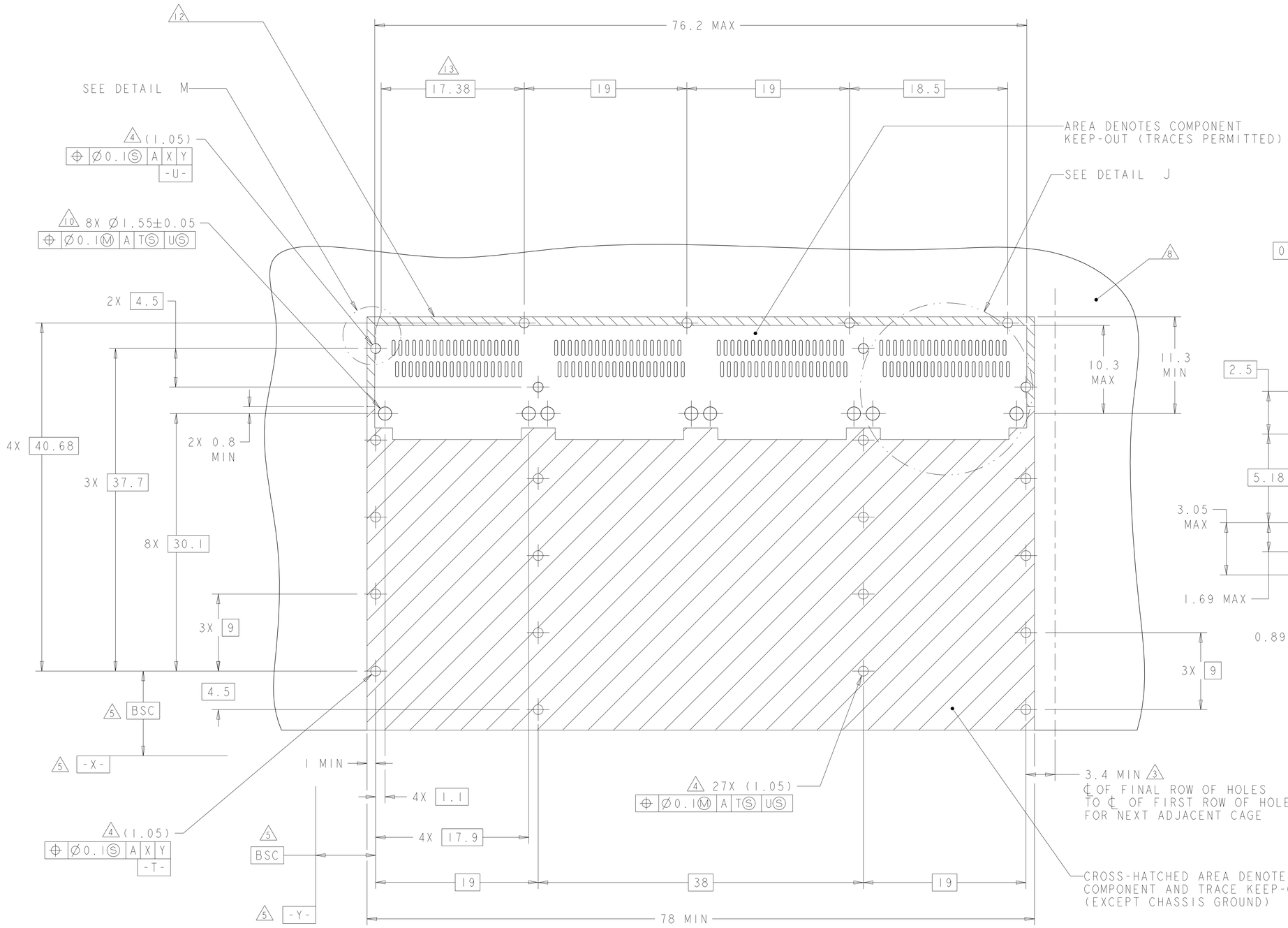

RECOMMENDED PC BOARD LAYOUT
SINGLE SIDE MOUNT CONFIGURATION
SCALE 4:1

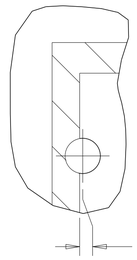

DETAIL M
SCALE 10:1

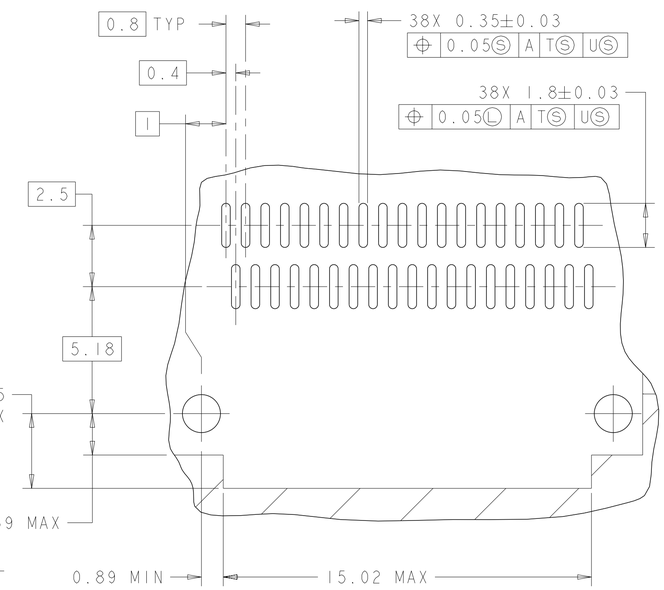

DETAIL J
3 PLACES
SCALE 8:1

THIS PRODUCT HAS NOT COMPLETED VALIDATION/QUALIFICATION TESTING

THIS DRAWING IS A CONTROLLED DOCUMENT.	DWN ZJ 24SEP2013	TE Connectivity	
DIMENSIONS: mm	CHK JY 24SEP2013	NAME 1X4 CAGE ASSEMBLY, BEHIND BEZEL, W/ HEAT SINKS, QSFP	
TOLERANCES UNLESS OTHERWISE SPECIFIED: 0 PLC ±- 1 PLC ±0.1 2 PLC ±0.1 3 PLC ±- 4 PLC ±- ANGLES ±-	APVD MK 24SEP2013	PRODUCT SPEC 108-2286	
		APPLICATION SPEC 114-13218	SIZE A1 / CAGE CODE 00779 / DRAWING NO C-2170615 / RESTRICTED TO -
MATERIAL - -	FINISH - -	WEIGHT -	
		Customer Drawing	SCALE 1:1 / SHEET 5 OF 6 / REV D

4805 (3/11)

THIS DRAWING IS UNPUBLISHED. RELEASED FOR PUBLICATION 2013
© COPYRIGHT 2013 TE CONNECTIVITY ALL RIGHTS RESERVED.

LOC	DIST
GP	00

REVISIONS

P	LTR	DESCRIPTION	DATE	DWN	APVD
	-	SEE SHEET 1	-	-	-

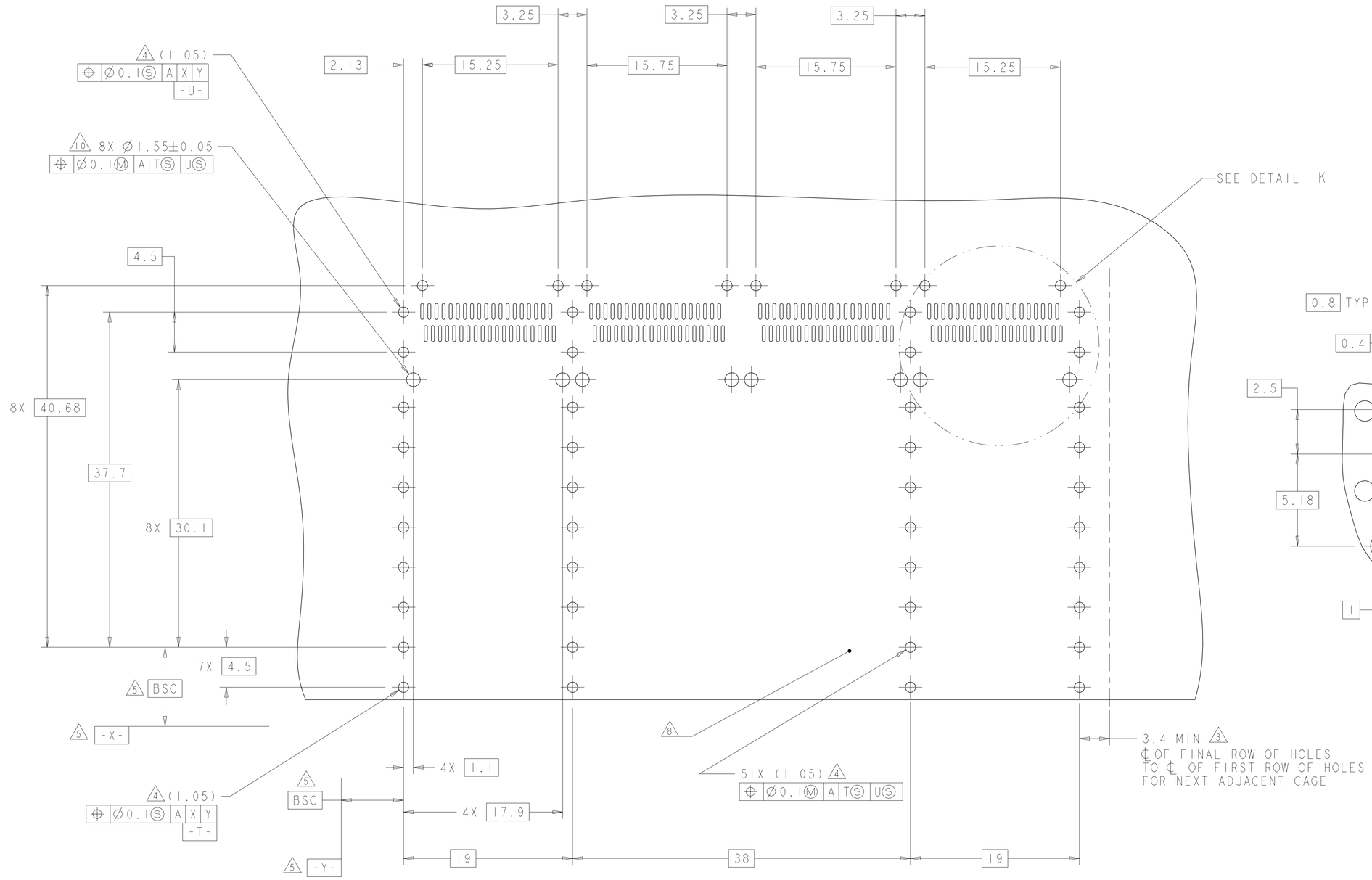

RECOMMENDED PC BOARD LAYOUT
BELLY TO BELLY CONFIGURATION
SEE SHEET 4 FOR COMPONENT
AND TRACE KEEP-OUTS
SCALE 4:1

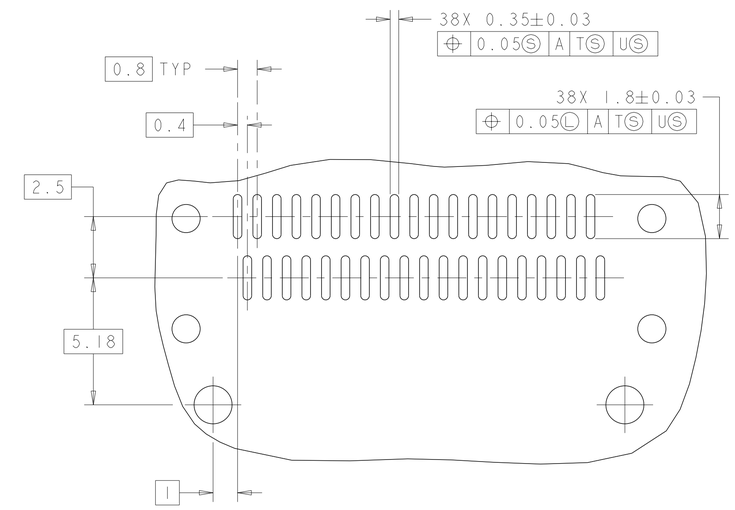

DETAIL K
SCALE 8:1

THIS PRODUCT HAS NOT COMPLETED VALIDATION/QUALIFICATION TESTING

THIS DRAWING IS A CONTROLLED DOCUMENT.	DWN ZJ 24SEP2013	TE Connectivity	
DIMENSIONS: mm	CHK JY 24SEP2013		
TOLERANCES UNLESS OTHERWISE SPECIFIED: 0 PLC ±- 1 PLC ±0.1 2 PLC ±0.1 3 PLC ±- 4 PLC ±- ANGLES ±-	APVD MC 24SEP2013	NAME 1X4 CAGE ASSEMBLY, BEHIND BEZEL, W/ HEAT SINKS, QSFP -	
	PRODUCT SPEC 108-2286		
	APPLICATION SPEC 114-13218	SIZE A1 / CAGE CODE 00779 / DRAWING NO C-2170615	RESTRICTED TO -
MATERIAL - -	WEIGHT -		
FINISH - -	Customer Drawing	SCALE 1:1 / SHEET 6 OF 6	REV D

4805 (3/11)

ООО «ЛайфЭлектроникс» “LifeElectronics” LLC

ИНН 7805602321 КПП 780501001 Р/С 40702810122510004610 ФАКБ "АБСОЛЮТ БАНК" (ЗАО) в г.Санкт-Петербурге К/С 30101810900000000703 БИК 044030703

Компания «Life Electronics» занимается поставками электронных компонентов импортного и отечественного производства от производителей и со складов крупных дистрибьюторов Европы, Америки и Азии.

С конца 2013 года компания активно расширяет линейку поставок компонентов по направлению коаксиальный кабель, кварцевые генераторы и конденсаторы (керамические, пленочные, электролитические), за счёт заключения дистрибьюторских договоров

Мы предлагаем:

- *Конкурентоспособные цены и скидки постоянным клиентам.*
- *Специальные условия для постоянных клиентов.*
- *Подбор аналогов.*
- *Поставку компонентов в любых объемах, удовлетворяющих вашим потребностям.*

- *Приемлемые сроки поставки, возможна ускоренная поставка.*
- *Доставку товара в любую точку России и стран СНГ.*
- *Комплексную поставку.*
- *Работу по проектам и поставку образцов.*
- *Формирование склада под заказчика.*

- *Сертификаты соответствия на поставляемую продукцию (по желанию клиента).*
- *Тестирование поставляемой продукции.*
- *Поставку компонентов, требующих военную и космическую приемку.*
- *Входной контроль качества.*
- *Наличие сертификата ISO.*

В составе нашей компании организован Конструкторский отдел, призванный помогать разработчикам, и инженерам.

Конструкторский отдел помогает осуществить:

- *Регистрацию проекта у производителя компонентов.*
- *Техническую поддержку проекта.*
- *Защиту от снятия компонента с производства.*
- *Оценку стоимости проекта по компонентам.*
- *Изготовление тестовой платы монтаж и пусконаладочные работы.*

Тел: +7 (812) 336 43 04 (многоканальный)
Email: org@lifeelectronics.ru

www.lifeelectronics.ru