# X9241A

Quad Digital Controlled Potentionmeters (XDCP™) Non-Volatile/Low Power/2-Wire/64 Taps

FN8164
Rev 7.00
August 17, 2015

The X9241A integrates four digitally controlled potentiometers (XDCP) on a monolithic CMOS integrated microcircuit.

The digitally controlled potentiometer is implemented using 63 resistive elements in a series array. Between each element are tap points connected to the wiper terminal through switches. The position of the wiper on the array is controlled by the user through the 2-wire bus interface. Each potentiometer has associated with it a volatile Wiper Counter Register (WCR) and 4 nonvolatile Data Registers (DR0:DR3) that can be directly written to and read by the user. The contents of the WCR controls the position of the wiper on the resistor array through the switches. Power up recalls the contents of DR0 to the WCR.

The XDCP can be used as a three-terminal potentiometer or as a two-terminal variable resistor in a wide variety of applications including control, parameter adjustments, and signal processing.

## Features

- Four potentiometers in one package
- 2-wire serial interface
- Register oriented format
  - Direct read/write/transfer of wiper positions
  - Store as many as four positions per potentiometer
- Terminal Voltages: +5V, -3.0V
- Cascade resistor arrays
- Low power CMOS
- High Reliability
  - Endurance–100,000 data changes per bit per register
  - Register data retention–100 years
- 16-bytes of nonvolatile memory
- 3 resistor array values
  - 2kΩ, 10kΩ, 50kΩ or combination
  - Cascadable for values of 4kΩ to 200kΩ
- Resolution: 64 taps each pot
- 20 Ld plastic DIP, 20 Ld TSSOP and 20 Ld SOIC packages
- Pb-free available (RoHS compliant)

## Block Diagram

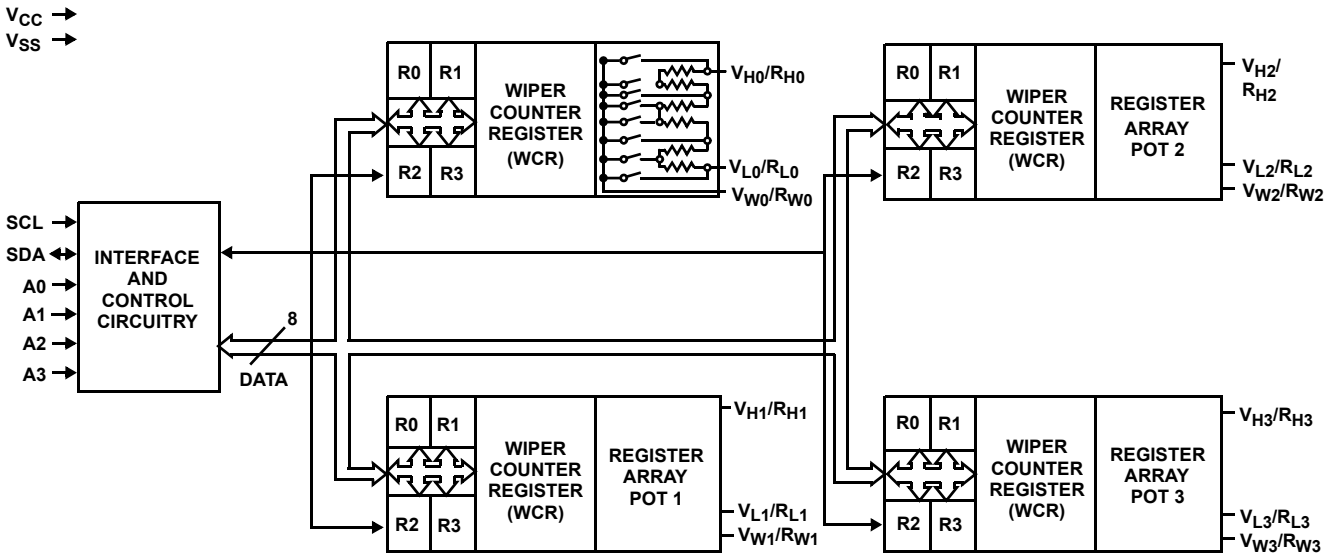

## *Ordering Information*

| PART NUMBER | PART MARKING | $V_{CC}$ LIMITS (V) | POTENTIOMETER ORGANIZATION (k) | TEMP RANGE (°C) | PACKAGE (RoHS Compliant) |
|---|---|---|---|---|---|
| X9241AMPZ (Note) **(No longer available, recommended replacement: X9241AMSZT1)** | X9241AMPZ | 5 ±10% | 2/10/50<br>Pot 0 = 2k<br>Pot 1 = 10k<br>Pot 2 = 10k<br>Pot 3 = 50k | 0 to +70 | 20 Ld PDIP*** |
| X9241AMPIZ (Note) **(No longer available, recommended replacement: X9241AMSZT1)** | X9241AMPIZ | | | -40 to +85 | 20 Ld PDIP*** |
| X9241AMSZ* (Note) | X9241AMS Z | | | 0 to +70 | 20 Ld SOIC |
| X9241AMSIZ* (Note) | X9241AMSI Z | | | -40 to +85 | 20 Ld SOIC |
| X9241AMVZ (Note) | X9241AM VZ | | | 0 to +70 | 20 Ld TSSOP |
| X9241AMVIZ* (Note) | X9241AM VIZ | | | -40 to +85 | 20 Ld TSSOP |
| X9241AWPIZ (Note) | X9241AWPIZ | | 10<br>Pot 0 = 10k<br>Pot 1 = 10k<br>Pot 2 = 10k<br>Pot 3 = 10k | 0 to +70 | 20 Ld PDIP |
| X9241AWSZ* (Note) | X9241AWS Z | | | 0 to +70 | 20 Ld SOIC |
| X9241AWSIZ* (Note) | X9241AWSI Z | | | -40 to +85 | 20 Ld SOIC |
| X9241AWVZ* (Note) | X9241AW VZ | | | 0 to +70 | 20 Ld TSSOP |
| X9241AWVIZ* (Note) | X9241AW VIZ | | | -40 to +85 | 20 Ld TSSOP |
| X9241AYPZ (Note) **(No longer available, recommended replacement: X9241AYSIZ)** | X9241AYPZ | | 2<br>Pot 0 = 2k<br>Pot 1 = 2k<br>Pot 2 = 2k<br>Pot 3 = 2k | 0 to +70 | 20 Ld PDIP*** |
| X9241AYSZ* (Note) | X9241AYS Z | | | 0 to +70 | 20 Ld SOIC |
| X9241AYSIZ* (Note) | X9241AYSI Z | | | -40 to +85 | 20 Ld SOIC |
| X9241AYVZ (Note) **(No longer available, recommended replacement: X9241AYVIZ)** | X9241AY VZ | | | 0 to +70 | 20 Ld TSSOP |
| X9241AYVIZ* (Note) | X9241AY VIZ | | | -40 to +85 | 20 Ld TSSOP |
| X9241AUPZ (Note) | X9241AUPZ | 5 ±10% | 50<br>Pot 0 = 50k<br>Pot 1 = 50k<br>Pot 2 = 50k<br>Pot 3 = 50k | 0 to +70 | 20 Ld PDIP*** |
| X9241AUPIZ (Note) | X9241AUPIZ | | | -40 to +85 | 20 Ld PDIP*** |
| X9241AUSZ* (Note) | X9241AUS Z | | | 0 to +70 | 20 Ld SOIC |
| X9241AUSIZ* (Note) | X9241AUSI Z | | | -40 to +85 | 20 Ld SOIC |
| X9241AUVZ* (Note) **(No longer available, recommended replacement: X9241AUSZT1)** | X9241AU VZ | | | 0 to +70 | 20 Ld TSSOP |
| X9241AUVIZ* (Note) | X9241AU VIZ | | | -40 to +85 | 20 Ld TSSOP |

*Add "T1" suffix for tape and reel.

***Pb-free PDIPs can be used for through hole wave solder processing only. They are not intended for use in Reflow solder processing applications.

NOTE: These Intersil Pb-free plastic packaged products employ special Pb-free material sets; molding compounds/die attach materials and 100% matte tin plate PLUS ANNEAL - e3 termination finish, which is RoHS compliant and compatible with both SnPb and Pb-free soldering operations. Intersil Pb-free products are MSL classified at Pb-free peak reflow temperatures that meet or exceed the Pb-free requirements of IPC/JEDEC J STD-020.

## Pin Descriptions

### Host Interface Pins

### Serial Clock (SCL)

The SCL input is used to clock data into and out of the X9241A.

### Serial Data (SDA)

SDA is a bidirectional pin used to transfer data into and out of the device. It is an open drain output and may be wire-ORed with any number of open drain or open collector outputs. An open drain output requires the use of a pull-up resistor. For selecting typical values, refer to the guidelines for calculating typical values on the bus pull-up resistors graph.

### Address

The Address inputs are used to set the least significant 4-bits of the 8-bit slave address. A match in the slave address serial data stream must be made with the Address input in order to initiate communication with the X9241A.

### Potentiometer Pins

**$V_H/R_H$($V_{H0}/R_{H0}$ TO $V_{H3}/R_{H3}$), $V_L/R_L$ ($V_{L0}/R_{L0}$ TO $V_{L3}/R_{L3}$)**

The $R_H$ and $R_L$ inputs are equivalent to the terminal connections on either end of a mechanical potentiometer.

**$V_W/R_W$ ($V_{W0}/R_{W0}$ TO $V_{W3}/R_{W3}$)**

The wiper outputs are equivalent to the wiper output of a mechanical potentiometer.

## Pinout

**X9241A**
**(20 LD DIP, SOIC, TSSOP)**
TOP VIEW

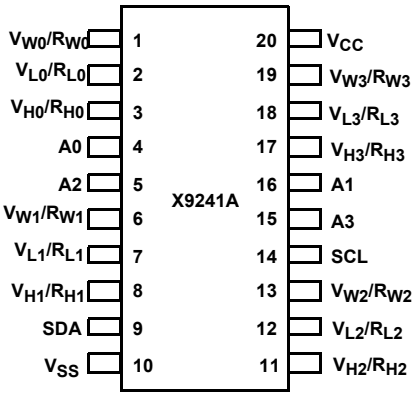


## Pin Names

| SYMBOL | DESCRIPTION |
|---|---|
| SCL | Serial Clock |
| SDA | Serial Data |
| A0 to A3 | Address |

## Pin Names

| SYMBOL | DESCRIPTION |
|---|---|
| $V_{H0}/R_{H0}$ to $V_{H3}/R_{H3}$, $V_{L0}/R_{L0}$ to $V_{L3}/R_{L3}$ | Potentiometer Pins (terminal equivalent) |
| $V_{W0}/R_{W0}$ to $V_{W3}/R_{W3}$ | Potentiometer Pins (wiper equivalent) |

## Principles of Operation

The X9241A is a highly integrated microcircuit incorporating four resistor arrays, their associated registers and counters and the serial interface logic providing direct communication between the host and the XDCP potentiometers.

### Serial Interface

The X9241A supports a bidirectional bus oriented protocol. The protocol defines any device that sends data onto the bus as a transmitter and the receiving device as the receiver. The device controlling the transfer is a master and the device being controlled is the slave. The master will always initiate data transfers and provide the clock for both transmit and receive operations. Therefore, the X9241A will be considered a slave device in all applications.

### Clock and Data Conventions

Data states on the SDA line can change only during SCL LOW periods ($t_{LOW}$). SDA state changes during SCL HIGH are reserved for indicating start and stop conditions.

### Start Condition

All commands to the X9241A are preceded by the start condition, which is a HIGH to LOW transition of SDA while SCL is HIGH ($t_{HIGH}$). The X9241A continuously monitors the SDA and SCL lines for the start condition and will not respond to any command until this condition is met.

### Stop Condition

All communications must be terminated by a stop condition, which is a LOW to HIGH transition of SDA while SCL is HIGH.

### Acknowledge

Acknowledge is a software convention used to provide a positive handshake between the master and slave devices on the bus to indicate the successful receipt of data. The transmitting device, either the master or the slave, will release the SDA bus after transmitting 8-bits. The master generates a ninth clock cycle and during this period the receiver pulls the SDA line LOW to acknowledge that it successfully received the 8-bits of data. See Figure 7.

The X9241A will respond with an acknowledge after recognition of a start condition and its slave address and once again after successful receipt of the command byte. If the command is followed by a data byte the X9241A will respond with a final acknowledge.

### Array Description

The X9241A is comprised of four resistor arrays. Each array contains 63 discrete resistive segments that are connected in

series. The physical ends of each array are equivalent to the fixed terminals of a mechanical potentiometer ($V_H/R_H$ and $V_L/R_L$ inputs).

At both ends of each array and between each resistor segment is a FET switch connected to the wiper ($V_W/R_W$) output. Within each individual array only one switch may be turned on at a time. These switches are controlled by the Wiper Counter Register (WCR). The 6 least significant bits of the WCR are decoded to select, and enable, 1 of 64 switches.

The WCR may be written directly, or it can be changed by transferring the contents of one of four associated Data Registers into the WCR. These Data Registers and the WCR can be read and written by the host system.

### Device Addressing

Following a start condition the master must output the address of the slave it is accessing. The most significant 4-bits of the slave address are the device type identifier (refer to Figure 1). For the X9241A, this is fixed as 0101[B].

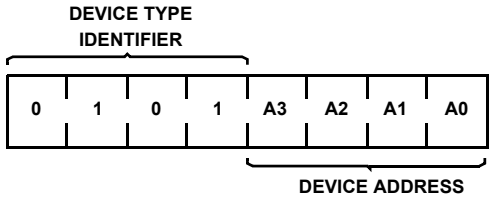


**FIGURE 1. SLAVE ADDRESS**

The next 4-bits of the slave address are the device address. The physical device address is defined by the state of the A0 to A3 inputs. The X9241A compares the serial data stream with the address input state; a successful compare of all 4 address bits is required for the X9241A to respond with an acknowledge.

### Acknowledge Polling

The disabling of the inputs, during the internal nonvolatile write operation, can be used to take advantage of the typical 5ms EEPROM write cycle time. Once the stop condition is issued to indicate the end of the nonvolatile write command, the X9241A initiates the internal write cycle. ACK polling can be initiated immediately. This involves issuing the start condition followed by the device slave address. If the X9241A is still busy with the write operation, no ACK will be returned. If the X9241A has completed the write operation, an ACK will be returned and the master can then proceed with the next operation.

### Flow 1. ACK Polling Sequence

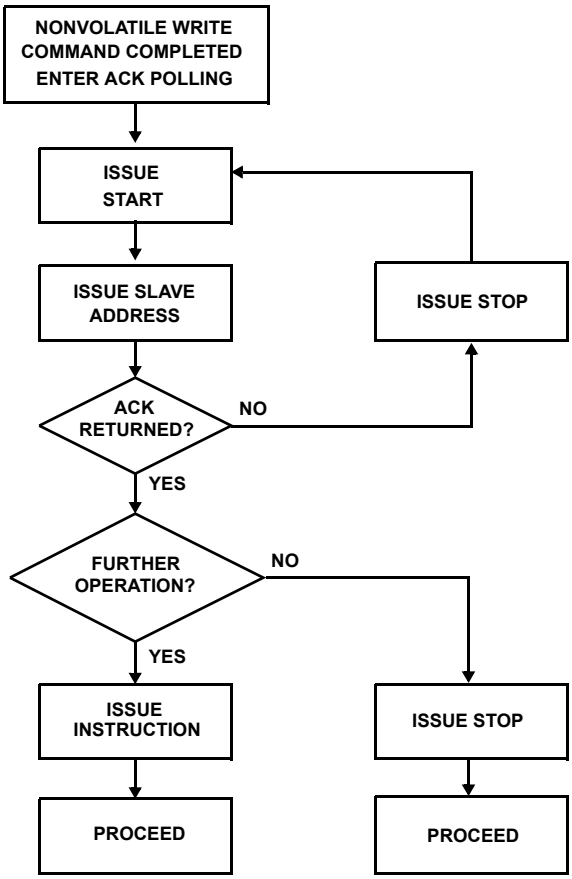


### Instruction Structure

The next byte sent to the X9241A contains the instruction and register pointer information. The 4 most significant bits are the instruction. The next 4-bits point to one of four pots and when applicable they point to one of four associated registers. The format is in Figure 2.

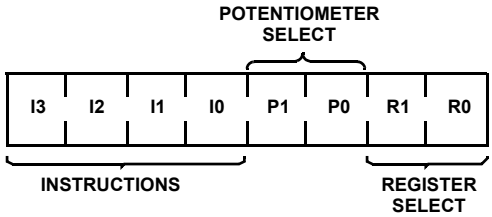


**FIGURE 2. INSTRUCTION BYTE FORMAT**

The 4 high order bits define the instruction. The next 2-bits (P1 and P0) select which one of the four potentiometers is to be affected by the instruction. The last 2-bits (R1 and R0) select one of the four registers that are to be acted upon when a register oriented instruction is issued.

Four of the nine instructions end with the transmission of the instruction byte. The basic sequence is illustrated in Figure 3. These two-byte instructions exchange data between the WCR and one of the data registers. A transfer from a Data Register to a WCR is essentially a write to a static RAM. The response of

the wiper to this action will be delayed $t_{STPWV}$. A transfer from WCR current wiper position to a Data Register is a write to nonvolatile memory and takes a minimum of $t_{WR}$ to complete. The transfer can occur between one of the four potentiometers and one of its associated registers; or it may occur globally, wherein the transfer occurs between all four of the potentiometers and one of their associated registers.

Four instructions require a three-byte sequence to complete. These instructions transfer data between the host and the X9241A; either between the host and one of the Data Registers or directly between the host and the WCR. These instructions are: Read WCR, read the current wiper position of the selected pot; Write WCR, change current wiper position of the selected pot; Read Data Register, read the contents of the selected nonvolatile register; Write Data Register, write a new value to the selected Data Register. The sequence of operations is shown in Figure 4.

The Increment/Decrement command is different from the other commands. Once the command is issued and the X9241A has responded with an acknowledge, the master can clock the selected wiper up and/or down in one segment steps; thereby, providing a fine tuning capability to the host. For each SCL clock pulse ($t_{HIGH}$) while SDA is HIGH, the selected wiper will move one resistor segment towards the $V_H/R_H$ terminal. Similarly, for each SCL clock pulse while SDA is LOW, the selected wiper will move one resistor segment towards the $V_L/R_L$ terminal. A detailed illustration of the sequence and timing for this operation is shown in Figures 5 and 6 respectively.

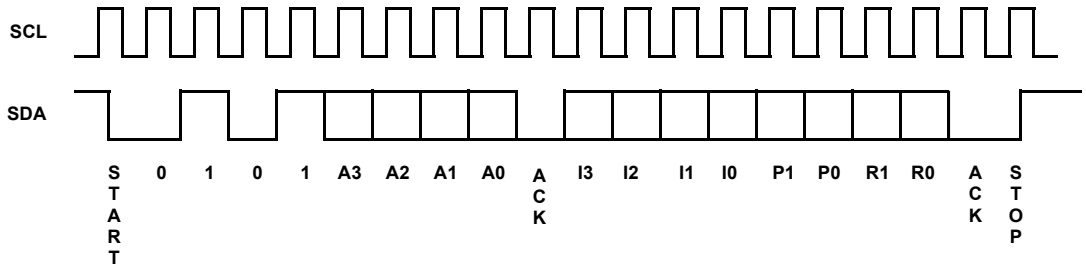


FIGURE 3. TWO-BYTE INSTRUCTION SEQUENCE

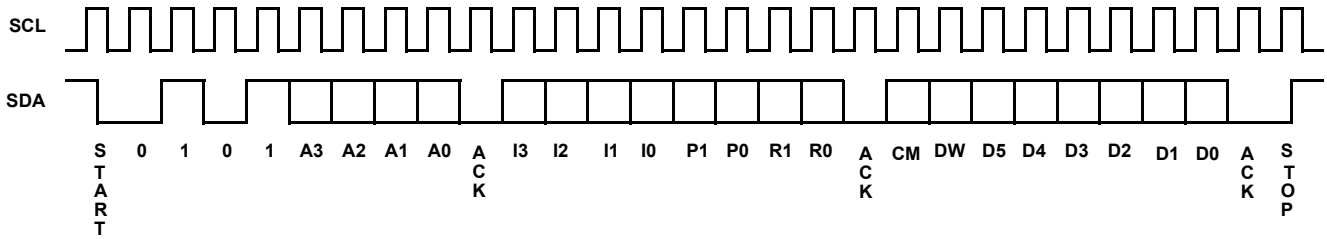


FIGURE 4. THREE-BYTE INSTRUCTION SEQUENCE

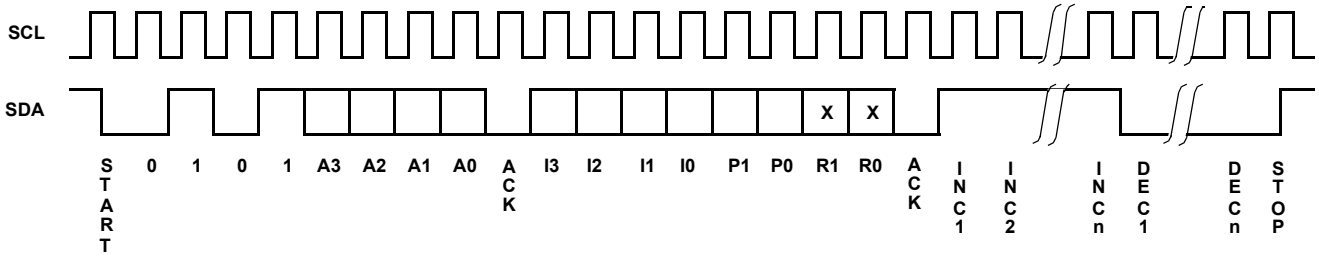


FIGURE 5. INCREMENT/DECREMENT INSTRUCTION SEQUENCE

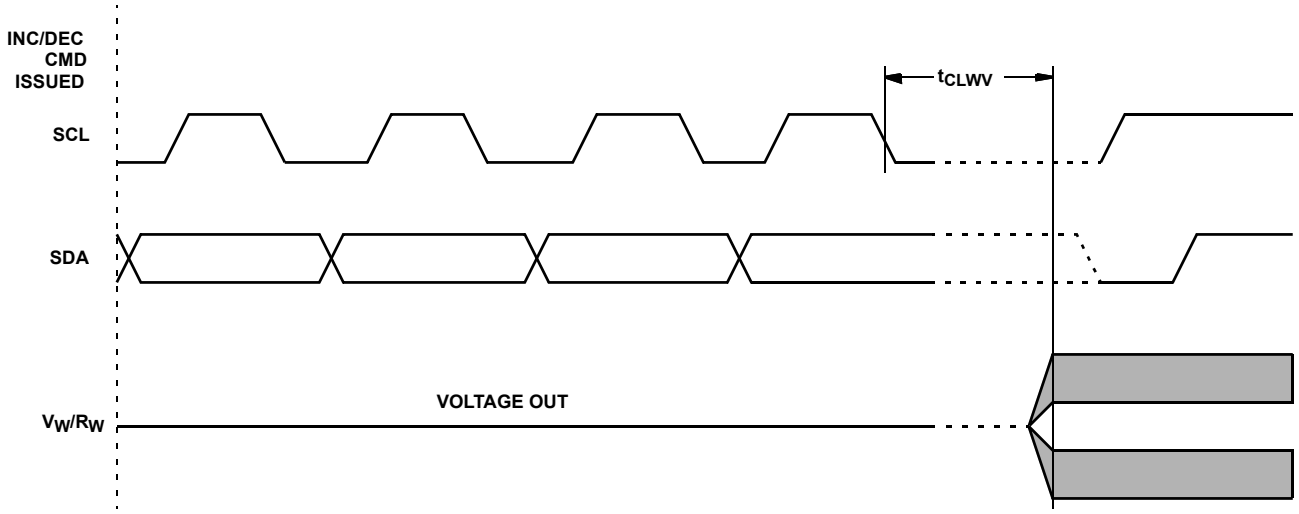


**FIGURE 6. INCREMENT/DECREMENT TIMING LIMITS**

**TABLE 1. INSTRUCTION SET**

| INSTRUCTION | INSTRUCTION FORMAT | | | | | | | | OPERATION |
|---|---|---|---|---|---|---|---|---|---|
| | $I_3$ | $I_2$ | $I_1$ | $I_0$ | $P_1$ | $P_0$ | $R_1$ | $R_0$ | |
| Read WCR | 1 | 0 | 0 | 1 | 1/0 (Note 1) | 1/0 | X (Note 2) | X | Read the contents of the Wiper Counter Register pointed to by $P_1$ to $P_0$ |
| Write WCR | 1 | 0 | 1 | 0 | 1/0 | 1/0 | X | X | Write new value to the Wiper Counter Register pointed to by $P_1$ to $P_0$ |
| Read Data Register | 1 | 0 | 1 | 1 | 1/0 | 1/0 | 1/0 | 1/0 | Read the contents of the Register pointed to by $P_1$ to $P_0$ and $R_1$ to $R_0$ |
| Write Data Register | 1 | 1 | 0 | 0 | 1/0 | 1/0 | 1/0 | 1/0 | Write new value to the Register pointed to by $P_1$ to $P_0$ and $R_1$ to $R_0$ |
| XFR Data Register to WCR | 1 | 1 | 0 | 1 | 1/0 | 1/0 | 1/0 | 1/0 | Transfer the contents of the Register pointed to by $P_1$ to $P_0$ and $R_1$ to $R_0$ to its associated WCR |
| XFR WCR to Data Register | 1 | 1 | 1 | 0 | 1/0 | 1/0 | 1/0 | 1/0 | Transfer the contents of the WCR pointed to by $P_1$ to $P_0$ to the Register pointed to by $R_1$ to $R_0$ |
| Global XFR Data Register to WCR | 0 | 0 | 0 | 1 | X | X | 1/0 | 1/0 | Transfer the contents of the Data Registers pointed to by $R_1$ to $R_0$ of all four pots to their respective WCR |
| Global XFR WCR to Data Register | 1 | 0 | 0 | 0 | X | X | 1/0 | 1/0 | Transfer the contents of all WCRs to their respective data Registers pointed to by $R_1$ to $R_0$ of all four pots |
| Increment/ Decrement Wiper | 0 | 0 | 1 | 0 | 1/0 | 1/0 | X | X | Enable Increment/decrement of the WCR pointed to by $P_1$ to $P_0$ |

NOTES:

1. 1/0 = data is one or zero
2. X = Not applicable or don't care; that is, a data register is not involved in the operation and need not be addressed (typical).

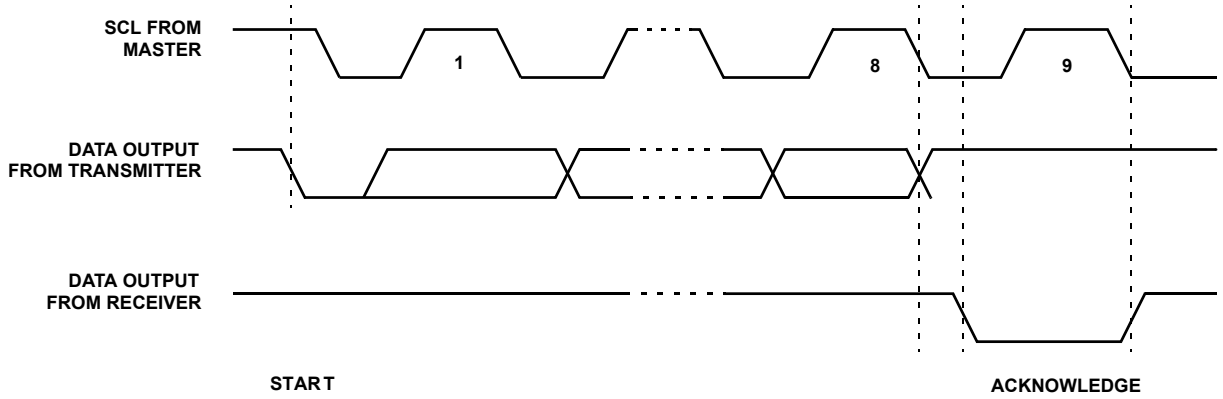


FIGURE 7. ACKNOWLEDGE RESPONSE FROM RECEIVER

## Detailed Operation

All four XDCP potentiometers share the serial interface and share a common architecture. Each potentiometer is comprised of a resistor array, a Wiper Counter Register and four Data Registers. A detailed discussion of the register organization and array operation follows.

### Wiper Counter Register

The X9241A contains four volatile Wiper Counter Registers (WCR), one for each XDCP potentiometer. The WCR can be envisioned as a 6-bit parallel and serial load counter with its outputs decoded to select one of sixty-four switches along its resistor array. The contents of the WCR can be altered in four ways: it may be written directly by the host via the Write WCR instruction (serial load); it may be written indirectly by transferring the contents of one of four associated Data Registers via the XFR Data Register instruction (parallel load); it can be modified one step at a time by the increment/decrement instruction; finally, it is loaded with the contents of its Data Register zero (DR0) upon power-up.

The WCR is a volatile register; that is, its contents are lost when the X9241A is powered-down. Although the register is automatically loaded with the value in DR0 upon power-up, it should be noted this may be different from the value present at power-down.

### Data Registers

Each potentiometer has four nonvolatile Data Registers. These can be read or written directly by the host and data can be transferred between any of the four Data Registers and the WCR. It should be noted all operations changing data in one of these registers is a nonvolatile operation and will take a maximum of 10ms.

If the application does not require storage of multiple settings for the potentiometer, these registers can be used as regular memory locations that could possibly store system parameters or user preference data.

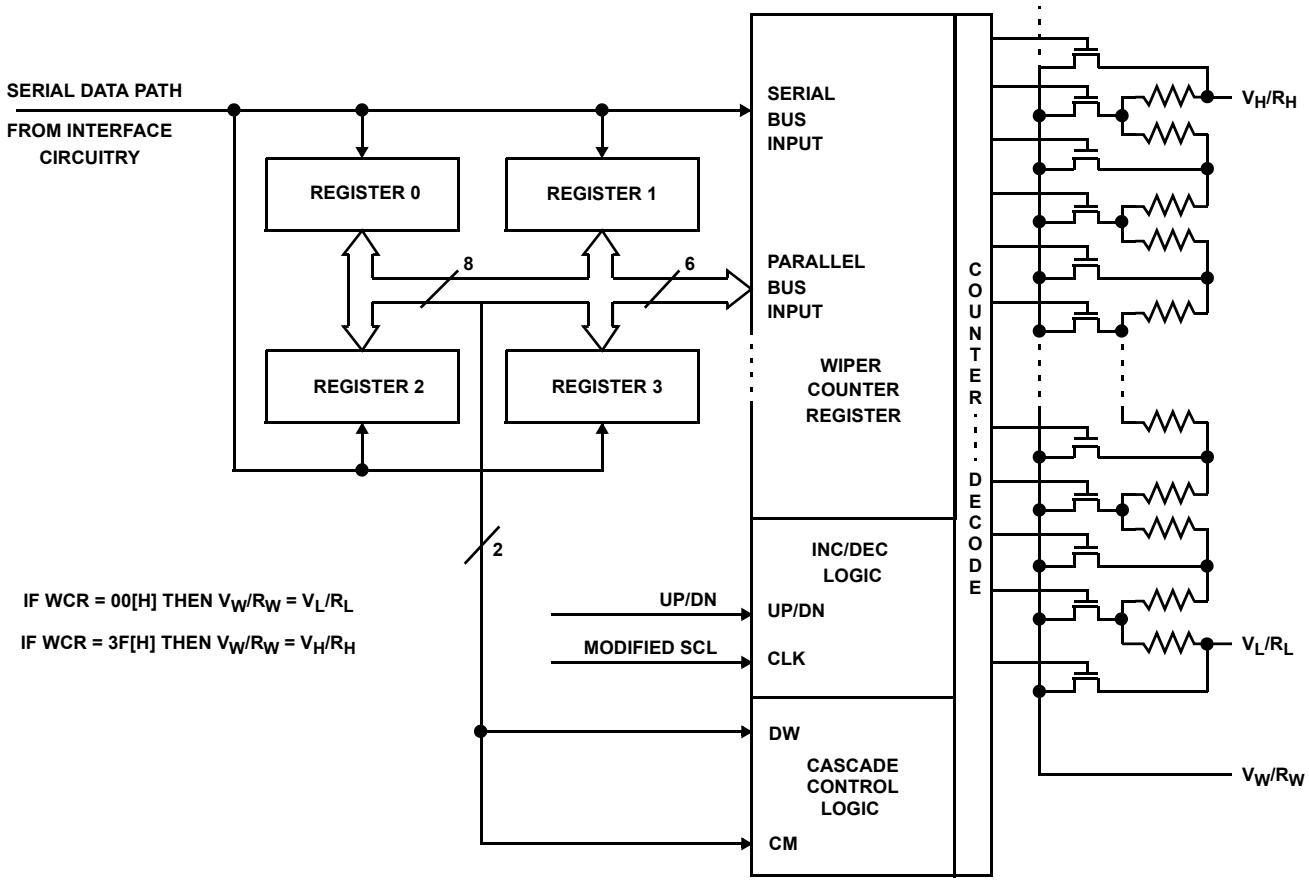


FIGURE 8. DETAILED POTENTIOMETER BLOCK DIAGRAM

### *Cascade Mode*

The X9241A provides a mechanism for cascading the arrays. That is, the sixty-three resistor elements of one array may be cascaded (linked) with the resistor elements of an adjacent array. The $V_L/R_L$ of the higher order array must be connected to the $V_H/R_H$ of the lower order array (See Figure 9).

### *Cascade Control Bits*

The data byte, for the three-byte commands, contains 6-bits (LSBs) for defining the wiper position plus 2 high order bits, CM (Cascade Mode) and DW (Disable Wiper, normal operation).

The state of the CM bit (bit 7 of WCR) enables or disables cascade mode. When the CM bit of the WCR is set to “0” the potentiometer is in the normal operation mode. When the CM bit of the WCR is set to “1” the potentiometer is cascaded with its adjacent higher order potentiometer. For example; if bit 7 of WCR2 is set to “1”, pot 2 will be cascaded to pot 3.

The state of DW enables or disables the wiper. When the DW bit (bit 6 of the WCR) is set to “0” the wiper is enabled; when set to “1” the wiper is disabled. If the wiper is disabled, the wiper terminal will be electrically isolated and float.

When operating in cascade mode $V_H/R_H$, $V_L/R_L$ and the wiper terminals of the cascaded arrays must be electrically connected externally. All but one of the wipers must be disabled. The user can alter the wiper position by writing directly to the WCR or indirectly by transferring the contents of the Data Registers to the WCR or by using the Increment/Decrement command.

When using the Increment/Decrement command the wiper position will automatically transition between arrays. The current position of the wiper can be determined by reading the WCR registers; if the DW bit is “0”, the wiper in that array is active. If the current wiper position is to be maintained on power-down a global XFR WCR to Data Register command must be issued to store the position in NV memory before power-down.

It is possible to connect three or all four potentiometers in cascade mode. It is also possible to connect POT 3 to POT 0 as a cascade. The requirements for external connections of $V_L/R_L$, $V_H/R_H$ and the wipers are the same in these cases.

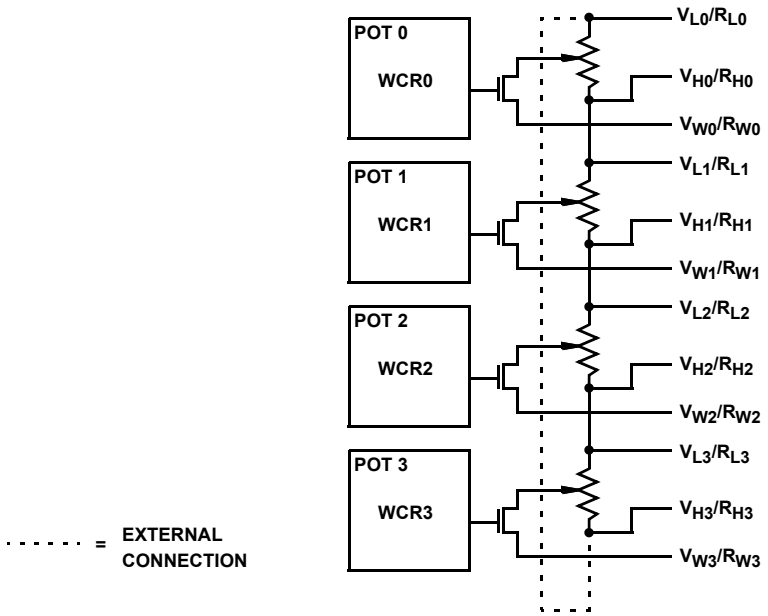


**FIGURE 9. CASCADING ARRAYS**

## Absolute Maximum Ratings

Supply Voltage ($V_{CC}$) Limits
X9241A. . . . . 5V ±10%
Max Wiper Current for 2k $R_{TOTAL}$ . . . . . ±4mA
Max Wiper Current for 10k and 50k $R_{TOTAL}$ . . . . . ±3mA
Voltage on SCK, SCL or any address
input with respect to $V_{SS}$ . . . . . -1V to +7V
Voltage on any $V_H/R_H$, $V_W/R_W$ or $V_L/R_L$
referenced to $V_{SS}$ . . . . . +6V/-4V
$\Delta V = |V_H/R_H - V_L/R_L|$ . . . . . .10V
$I_W$ (10s) . . . . . ±6mA
Power rating (each pot) . . . . . .50mW

## Thermal Information

Temperature under bias. . . . . .-65 to +135°C
Storage temperature . . . . . .-65 to +150°C
Pb-free reflow profile . . . . . .see link below
http://www.intersil.com/pbfree/Pb-FreeReflow.asp

## Recommended Operating Conditions

Temperature (Commercial) . . . . . 0°C to +70°C
Temperature (Industrial). . . . . .-40°C to +85°C

*CAUTION: Do not operate at or near the maximum ratings listed for extended periods of time. Exposure to such conditions may adversely impact product reliability and result in failures not covered by warranty.*

## Analog Specifications (Over recommended operating conditions unless otherwise stated).

| SYMBOL | PARAMETER | TEST CONDITION | LIMITS MIN (Note 11) | TYP | MAX (Note 11) | UNIT |
|---|---|---|---|---|---|---|
| $R_{TOTAL}$ | End to end resistance | | -20 | | +20 | % |
| $R_W$ | Wiper resistance | Wiper Current = $(V_H - V_L)/R_{TOTAL}$ | | 40 | 130 | Ω |
| $V_{TERM}$ | Voltage on any $V_H/R_H$, $V_W/R_W$ or $V_L/R_L$ Pin | | -3.0 | | +5 | V |
| | Noise | Ref: 1kHz (Note 7) | | ≤120 | | dBV |
| | Resolution | (Note 7) | | 1.6 | | % |
| | Absolute linearity (Note 3) | $R_{w(n)(actual)} - R_{w(n)(expected)}$ | | | ±1 | MI (Note 5) |
| | Relative linearity (Note 4) | $R_{w(n+1)} - [R_{w(n)} + MI]$ | | | ±0.2 | MI (Note 5) |
| | Temperature coefficient of $R_{TOTAL}$ | (Note 7) | | ±300 | | ppm/°C |
| | Ratiometric temperature coefficient | (Note 7) | | ±20 | | ppm/C |
| $C_H/C_L/C_W$ | Potentiometer capacitances | See Circuit #3 and (Note 7) | | 15/15/25 | | pF |
| $I_{AL}$ | $R_H$, $R_l$, $R_W$ leakage current | $V_{IN} = V_{TERM}$. Device is in stand-by mode. | | 0.1 | 1 | µA |

## DC Electrical Specifications (Over recommended operating conditions unless otherwise stated.)

| SYMBOL | PARAMETER | TEST CONDITION | LIMITS MIN (Note 11) | TYP | MAX (Note 11) | UNIT |
|---|---|---|---|---|---|---|
| $I_{CC}$ | Supply current (active) | $f_{SCL}$ = 100kHz, Write/Read to WCR, Other Inputs = $V_{SS}$ | | | 3 | mA |
| $I_{SB}$ | $V_{CC}$ current (standby) | SCL = SDA = $V_{CC}$, Addr. = $V_{SS}$ | | 200 | 500 | µA |
| $I_{LI}$ | Input leakage current | $V_{IN} = V_{SS}$ to $V_{CC}$ | | | 10 | µA |
| $I_{LO}$ | Output leakage current | $V_{OUT} = V_{SS}$ to $V_{CC}$ | | | 10 | µA |
| $V_{IH}$ | Input HIGH voltage | | 2 | | | V |
| $V_{IL}$ | Input LOW voltage | | | | 0.8 | V |
| $V_{OL}$ | Output LOW voltage | $I_{OL}$ = 3mA | | | 0.4 | V |

NOTES:

3. Absolute Linearity is utilized to determine actual wiper voltage versus expected voltage as determined by wiper position when used as a potentiometer.
4. Relative Linearity is utilized to determine the actual change in voltage between two successive tap positions when used as a potentiometer. It is a measure of the error in step size.
5. MI = RTOT/63 or $(R_H – R_L)/63$, single pot
6. Max = all four arrays cascaded together, Typical = individual array resolutions.

## Endurance and Data Retention

| PARAMETER | MIN | UNIT |
|---|---|---|
| Minimum endurance | 100,000 | Data changes per bit per register |
| Data retention | 100 | Years |

## Capacitance

| SYMBOL | PARAMETER | TEST CONDITION | TYP | UNIT |
|---|---|---|---|---|
| $C_{I/O}$ (Note 7) | Input/output capacitance (SDA) | $V_{I/O}$ = 0V | 19 | pF |
| $C_{IN}$ (Note 7) | Input capacitance (A0, A1, A2, A3 and SCL) | $V_{IN}$ = 0V | 12 | pF |

## Power-up Timing

| SYMBOL | PARAMETER | MIN (Note 11) | TYP | MAX (Note 11) | UNIT |
|---|---|---|---|---|---|
| $t_{PUR}$ (Note 8) | Power-up to initiation of read operation | | | 1 | ms |
| $t_{PUW}$ (Note 8) | Power-up to initiation of write operation | | | 5 | ms |
| $t_R V_{CC}$ | $V_{CC}$ Power up ramp rate | 0.2 | | 50 | V/ms |

## Power-up Requirements (Power Up sequencing can affect correct recall of the wiper registers)

The preferred power-on sequence is as follows: First $V_{CC}$, then the potentiometer pins. It is suggested that Vcc reach 90% of its final value before power is applied to the potentiometer pins. The $V_{CC}$ ramp rate specification should be met, and any glitches or slope changes in the $V_{CC}$ line should be held to <100mV if possible. Also, $V_{CC}$ should not reverse polarity by more than 0.5V.

NOTES:

7. Limits should be considered typical and are not production tested.
8. Limits established by characterization and are not production tested.
9. Maximum Wiper Current is derated over temperature. See the Wiper Current Derating Curve.
10. $T_i$ value denotes the maximum noise glitch pulse width that the device will ignore on either SCL or SDA pins. Any noise glitch pulse width that is greater than this maximum value will be considered as a valid clock or data pulse and may cause communication failure to the device.
11. Parts are 100% tested at either +70°C or +85°C. Over temperature limits established by characterization and are not production tested.

### *AC Conditions of Test*

| | |
|---|---|
| Input pulse levels | $V_{CC}$ x 0.1 to $V_{CC}$ x 0.9 |
| Input rise and fall times | 10ns |
| Input and output timing levels | $V_{CC}$ x 0.5 |
| Input pulse levels | $V_{CC}$ x 0.1 to $V_{CC}$ x 0.9 |

### *Symbol Table*

| WAVEFORM | INPUTS | OUTPUTS |
|---|---|---|
| | Must be steady | Will be steady |
| | May change from LOW to HIGH | Will change from LOW to HIGH |
| | May change from HIGH to LOW | Will change from HIGH to LOW |
| | Don't Care: Changes Allowed | Changing: State Not Known |
| | N/A | Center Line is High Impedance |

### *Equivalent AC Test Circuit*

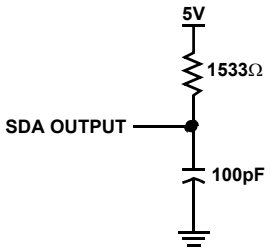


### *Guidelines for Calculating Typical Values of Bus Pull-Up Resistors*

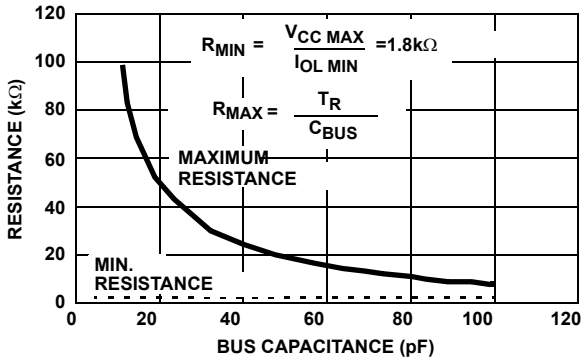


### *Circuit #3 SPICE Macro Model*

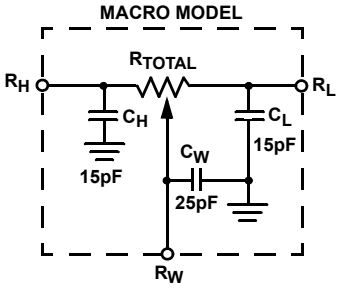


### *DCP Wiper Current De-rating Curve*

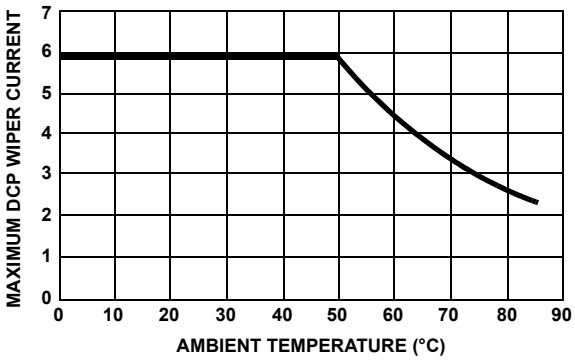


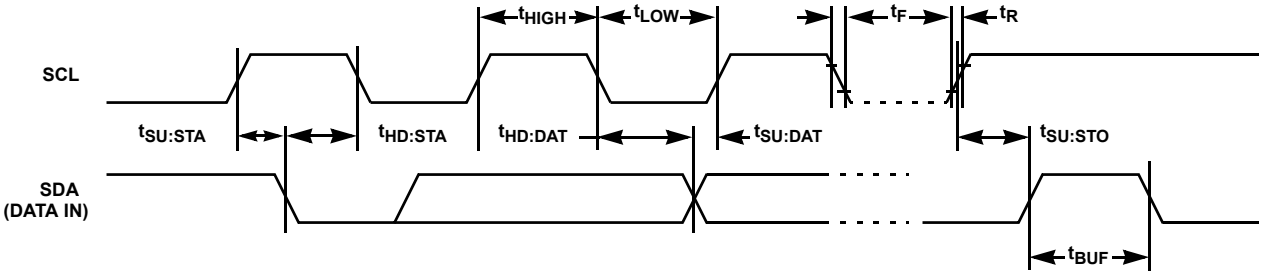


**FIGURE 10. INPUT BUS TIMING**

## AC Electrical Specifications

(Over recommended operating conditions unless otherwise stated).

| SYMBOL | PARAMETER | LIMITS | | UNIT | REFERENCE FIGURE NUMBER(S) |
|---|---|---|---|---|---|
| | | MIN (Note 11) | MAX (Note 11) | | |
| $f_{SCL}$ | SCL clock frequency | 0 | 100 | kHz | 10 |
| $t_{LOW}$ | Clock LOW period | 4700 | | ns | 10 |
| $t_{HIGH}$ | Clock HIGH period | 4000 | | ns | 10 |
| $t_R$ | SCL and SDA rise time | | 1000 | ns | 10 |
| $t_F$ | SCL and SDA fall time | | 300 | ns | 10 |
| $T_i$, (Note 11) | Noise suppression time constant (glitch filter) | | 20 | ns | 10 |
| $t_{SU:STA}$ | Start condition setup time (for a repeated start condition) | 4000 | | ns | 10 and 12 |
| $t_{HD:STA}$ | Start condition hold time | 4000 | | ns | 10 and 12 |

## AC Electrical Specifications (Over recommended operating conditions unless otherwise stated). **(Continued)**

| SYMBOL | PARAMETER | LIMITS MIN (Note 11) | LIMITS MAX (Note 11) | UNIT | REFERENCE FIGURE NUMBER(S) |
|---|---|---|---|---|---|
| $t_{SU:DAT}$ | Data in setup time | 250 | | ns | 10 |
| $t_{HD:DAT}$ | Data in hold time | 0 | | ns | 10 |
| $t_{AA}$ | SCL LOW to SDA data out valid | | 3500 | ns | 11 |
| $t_{DH}$ | Data out hold time | 30 | | ns | 11 |
| $t_{SU:STO}$ | Stop condition setup time | 4000 | | ns | 10 and 12 |
| $t_{BUF}$ | Bus free time prior to new transmission | 4700 | | ns | 10 |
| $t_{WR}$ | Write cycle time (nonvolatile write operation) | | 10 | ms | 13 |
| $t_{STPWV}$ | Wiper response time from stop generation | | 500 | µs | 13 |
| $t_{CLWV}$ | Wiper response from SCL LOW | | 1000 | µs | 6 |

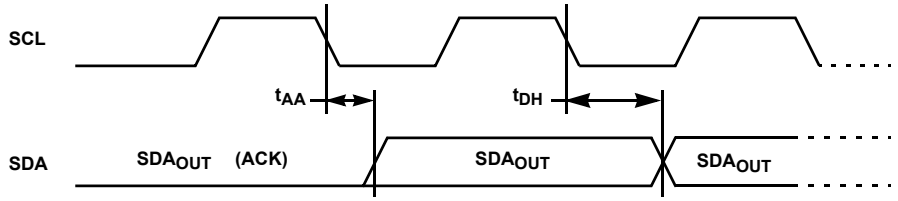


**FIGURE 11. OUTPUT BUS TIMING**

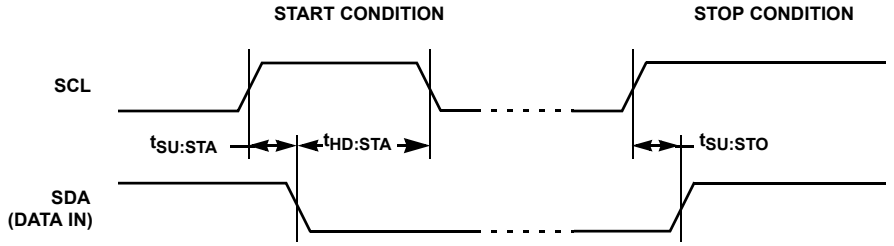


**FIGURE 12. START STOP TIMING**

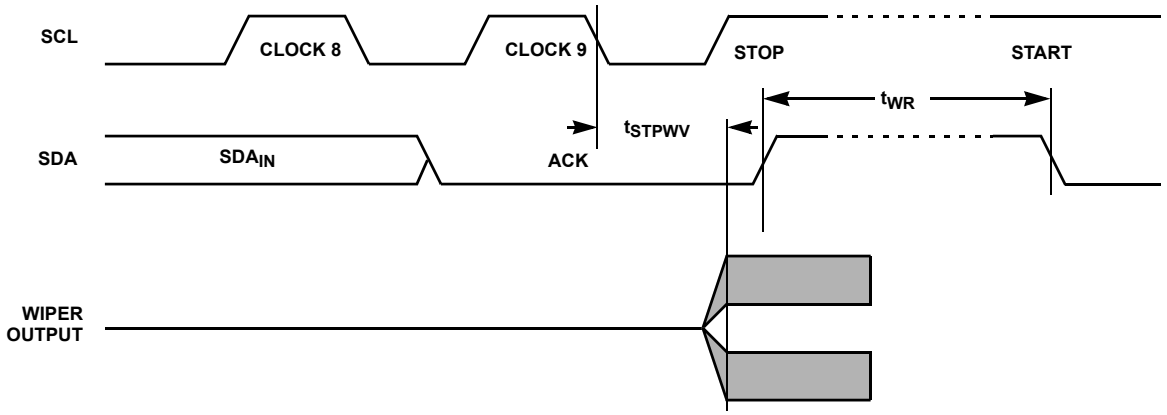


**FIGURE 13. WRITE CYCLE AND WIPER RESPONSE TIMING**

## Revision History

The revision history provided is for informational purposes only and is believed to be accurate, but not warranted. Please go to the web to make sure that you have the latest revision.

| DATE | REVISION | CHANGE |
|---|---|---|
| August 17, 2015 | FN8164.7 | - Ordering Information Table on page 2.<br>- Added Revision History beginning with Rev 1.<br>- Added About Intersil Verbiage. |

## About Intersil

Intersil Corporation is a leading provider of innovative power management and precision analog solutions. The company's products address some of the largest markets within the industrial and infrastructure, mobile computing and high-end consumer markets.

For the most updated datasheet, application notes, related documentation and related parts, please see the respective product information page found at www.intersil.com.

You may report errors or suggestions for improving this datasheet by visiting www.intersil.com/ask.

Reliability reports are also available from our website at
www.intersil.com/support

## *Thin Shrink Small Outline Package Family (TSSOP)*

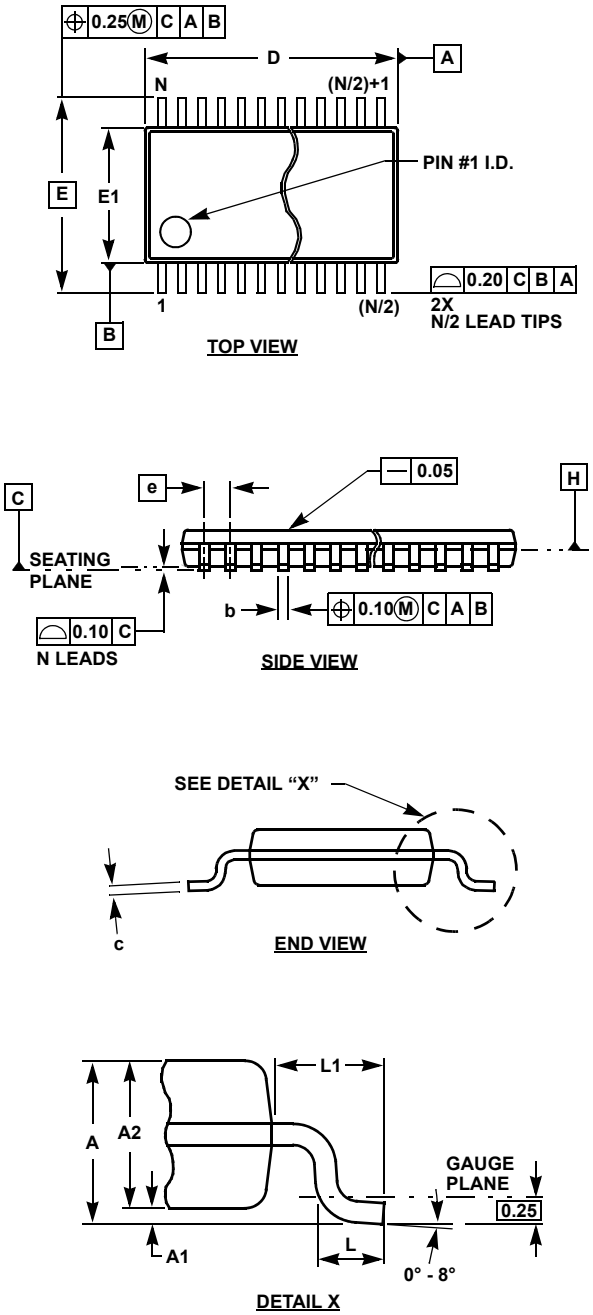


### MDP0044

**THIN SHRINK SMALL OUTLINE PACKAGE FAMILY**

| SYMBOL | MILLIMETERS | | | | | TOLERANCE |
|---|---|---|---|---|---|---|
| | 14 LD | 16 LD | 20 LD | 24 LD | 28 LD | |
| A | 1.20 | 1.20 | 1.20 | 1.20 | 1.20 | Max |
| A1 | 0.10 | 0.10 | 0.10 | 0.10 | 0.10 | ±0.05 |
| A2 | 0.90 | 0.90 | 0.90 | 0.90 | 0.90 | ±0.05 |
| b | 0.25 | 0.25 | 0.25 | 0.25 | 0.25 | +0.05/-0.06 |
| c | 0.15 | 0.15 | 0.15 | 0.15 | 0.15 | +0.05/-0.06 |
| D | 5.00 | 5.00 | 6.50 | 7.80 | 9.70 | ±0.10 |
| E | 6.40 | 6.40 | 6.40 | 6.40 | 6.40 | Basic |
| E1 | 4.40 | 4.40 | 4.40 | 4.40 | 4.40 | ±0.10 |
| e | 0.65 | 0.65 | 0.65 | 0.65 | 0.65 | Basic |
| L | 0.60 | 0.60 | 0.60 | 0.60 | 0.60 | ±0.15 |
| L1 | 1.00 | 1.00 | 1.00 | 1.00 | 1.00 | Reference |

Rev. F 2/07

NOTES:

1. Dimension "D" does not include mold flash, protrusions or gate burrs. Mold flash, protrusions or gate burrs shall not exceed 0.15mm per side.
2. Dimension "E1" does not include interlead flash or protrusions. Interlead flash and protrusions shall not exceed 0.25mm per side.
3. Dimensions "D" and "E1" are measured at dAtum Plane H.
4. Dimensioning and tolerancing per ASME Y14.5M-1994.

## *Small Outline Package Family (SO)*

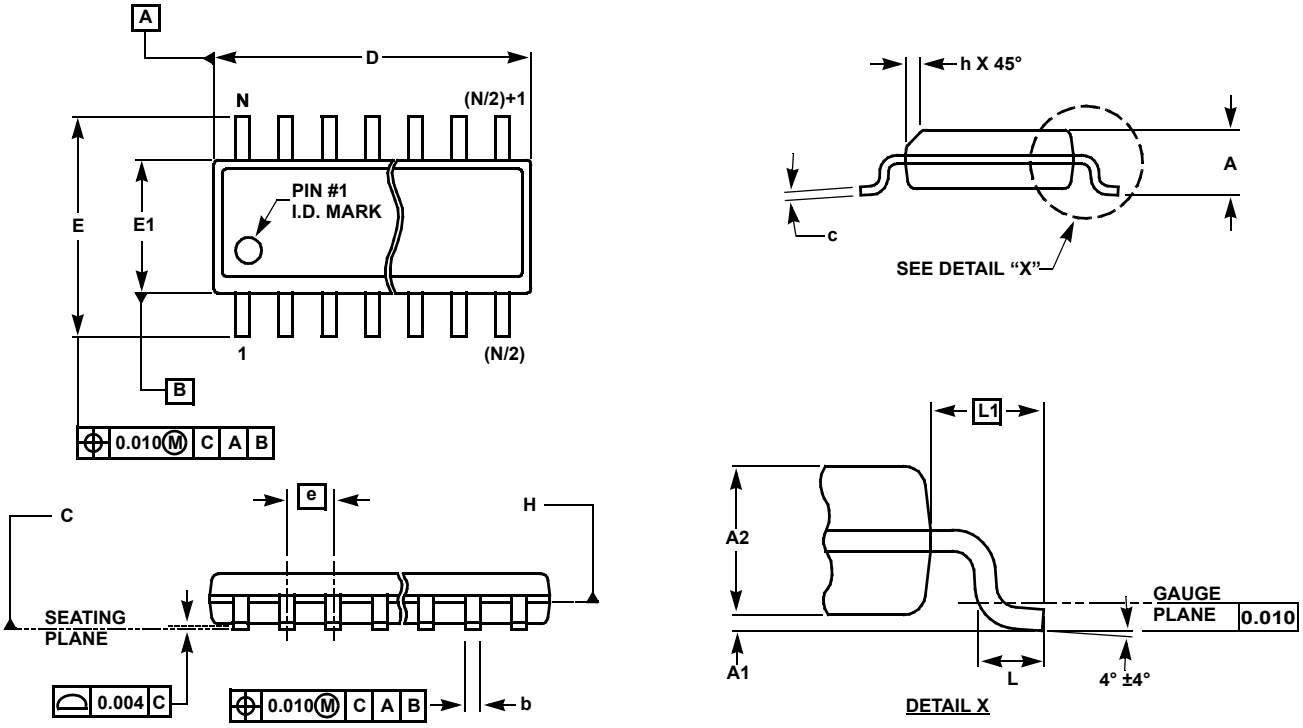


### MDP0027

**SMALL OUTLINE PACKAGE FAMILY (SO)**

| SYMBOL | INCHES | | | | | | | TOLERANCE | NOTES |
|---|---|---|---|---|---|---|---|---|---|
| | SO-8 | SO-14 | SO16 (0.150") | SO16 (0.300") (SOL-16) | SO20 (SOL-20) | SO24 (SOL-24) | SO28 (SOL-28) | | |
| A | 0.068 | 0.068 | 0.068 | 0.104 | 0.104 | 0.104 | 0.104 | MAX | - |
| A1 | 0.006 | 0.006 | 0.006 | 0.007 | 0.007 | 0.007 | 0.007 | ±0.003 | - |
| A2 | 0.057 | 0.057 | 0.057 | 0.092 | 0.092 | 0.092 | 0.092 | ±0.002 | - |
| b | 0.017 | 0.017 | 0.017 | 0.017 | 0.017 | 0.017 | 0.017 | ±0.003 | - |
| c | 0.009 | 0.009 | 0.009 | 0.011 | 0.011 | 0.011 | 0.011 | ±0.001 | - |
| D | 0.193 | 0.341 | 0.390 | 0.406 | 0.504 | 0.606 | 0.704 | ±0.004 | 1, 3 |
| E | 0.236 | 0.236 | 0.236 | 0.406 | 0.406 | 0.406 | 0.406 | ±0.008 | - |
| E1 | 0.154 | 0.154 | 0.154 | 0.295 | 0.295 | 0.295 | 0.295 | ±0.004 | 2, 3 |
| e | 0.050 | 0.050 | 0.050 | 0.050 | 0.050 | 0.050 | 0.050 | Basic | - |
| L | 0.025 | 0.025 | 0.025 | 0.030 | 0.030 | 0.030 | 0.030 | ±0.009 | - |
| L1 | 0.041 | 0.041 | 0.041 | 0.056 | 0.056 | 0.056 | 0.056 | Basic | - |
| h | 0.013 | 0.013 | 0.013 | 0.020 | 0.020 | 0.020 | 0.020 | Reference | - |
| N | 8 | 14 | 16 | 16 | 20 | 24 | 28 | Reference | - |

Rev. M 2/07

NOTES:

1. Plastic or metal protrusions of 0.006" maximum per side are not included.
2. Plastic interlead protrusions of 0.010" maximum per side are not included.
3. Dimensions "D" and "E1" are measured at Datum Plane "H".
4. Dimensioning and tolerancing per ASME Y14.5M-1994

## *Plastic Dual-In-Line Packages (PDIP)*

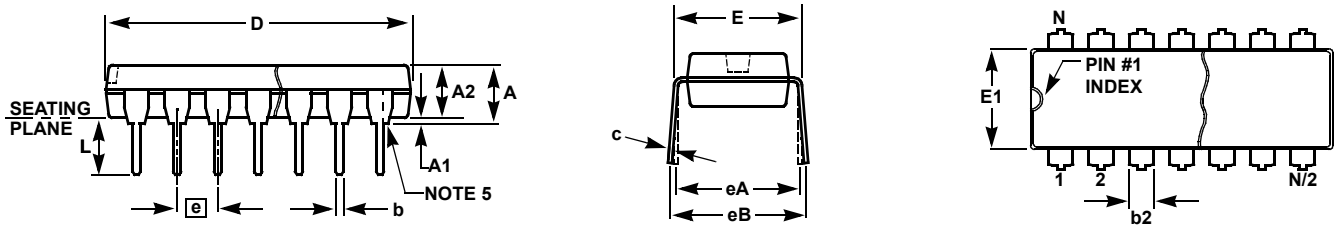


### MDP0031

**PLASTIC DUAL-IN-LINE PACKAGE**

| SYMBOL | INCHES | | | | | TOLERANCE | NOTES |
|---|---|---|---|---|---|---|---|
| | PDIP8 | PDIP14 | PDIP16 | PDIP18 | PDIP20 | | |
| A | 0.210 | 0.210 | 0.210 | 0.210 | 0.210 | MAX | |
| A1 | 0.015 | 0.015 | 0.015 | 0.015 | 0.015 | MIN | |
| A2 | 0.130 | 0.130 | 0.130 | 0.130 | 0.130 | ±0.005 | |
| b | 0.018 | 0.018 | 0.018 | 0.018 | 0.018 | ±0.002 | |
| b2 | 0.060 | 0.060 | 0.060 | 0.060 | 0.060 | +0.010/-0.015 | |
| c | 0.010 | 0.010 | 0.010 | 0.010 | 0.010 | +0.004/-0.002 | |
| D | 0.375 | 0.750 | 0.750 | 0.890 | 1.020 | ±0.010 | 1 |
| E | 0.310 | 0.310 | 0.310 | 0.310 | 0.310 | +0.015/-0.010 | |
| E1 | 0.250 | 0.250 | 0.250 | 0.250 | 0.250 | ±0.005 | 2 |
| e | 0.100 | 0.100 | 0.100 | 0.100 | 0.100 | Basic | |
| eA | 0.300 | 0.300 | 0.300 | 0.300 | 0.300 | Basic | |
| eB | 0.345 | 0.345 | 0.345 | 0.345 | 0.345 | ±0.025 | |
| L | 0.125 | 0.125 | 0.125 | 0.125 | 0.125 | ±0.010 | |
| N | 8 | 14 | 16 | 18 | 20 | Reference | |

Rev. C 2/07

NOTES:

1. Plastic or metal protrusions of 0.010” maximum per side are not included.
2. Plastic interlead protrusions of 0.010” maximum per side are not included.
3. Dimensions E and eA are measured with the leads constrained perpendicular to the seating plane.
4. Dimension eB is measured with the lead tips unconstrained.
5. 8 and 16 lead packages have half end-leads as shown.

**© Copyright Intersil Americas LLC 2005-2015. All Rights Reserved.**
**All trademarks and registered trademarks are the property of their respective owners.**

For additional products, see www.intersil.com/en/products.html

Intersil products are manufactured, assembled and tested utilizing ISO9001 quality systems as noted in the quality certifications found at www.intersil.com/en/support/qualandreliability.html

*Intersil products are sold by description only. Intersil may modify the circuit design and/or specifications of products at any time without notice, provided that such modification does not, in Intersil's sole judgment, affect the form, fit or function of the product. Accordingly, the reader is cautioned to verify that datasheets are current before placing orders. Information furnished by Intersil is believed to be accurate and reliable. However, no responsibility is assumed by Intersil or its subsidiaries for its use; nor for any infringements of patents or other rights of third parties which may result from its use. No license is granted by implication or otherwise under any patent or patent rights of Intersil or its subsidiaries.*

For information regarding Intersil Corporation and its products, see www.intersil.com

ООО «ЛайфЭлектроникс» “LifeElectronics” LLC

ИНН 7805602321 КПП 780501001 Р/С 40702810122510004610 ФАКБ "АБСОЛЮТ БАНК" (ЗАО) в г.Санкт-Петербурге К/С 30101810900000000703 БИК 044030703

*Компания «Life Electronics» занимается поставками электронных компонентов импортного и отечественного производства от производителей и со складов крупных дистрибьюторов Европы, Америки и Азии.*

*С конца 2013 года компания активно расширяет линейку поставок компонентов по направлению коаксиальный кабель, кварцевые генераторы и конденсаторы (керамические, пленочные, электролитические), за счёт заключения дистрибьюторских договоров*

*Мы предлагаем:*

- *Конкурентоспособные цены и скидки постоянным клиентам.*
- *Специальные условия для постоянных клиентов.*
- *Подбор аналогов.*
- *Поставку компонентов в любых объемах, удовлетворяющих вашим потребностям.*

- *Приемлемые сроки поставки, возможна ускоренная поставка.*
- *Доставку товара в любую точку России и стран СНГ.*
- *Комплексную поставку.*
- *Работу по проектам и поставку образцов.*
- *Формирование склада под заказчика.*

- *Сертификаты соответствия на поставляемую продукцию (по желанию клиента).*
- *Тестирование поставляемой продукции.*
- *Поставку компонентов, требующих военную и космическую приемку.*
- *Входной контроль качества.*
- *Наличие сертификата ISO.*

*В составе нашей компании организован Конструкторский отдел, призванный помогать разработчикам, и инженерам.*

*Конструкторский отдел помогает осуществить:*

- *Регистрацию проекта у производителя компонентов.*
- *Техническую поддержку проекта.*
- *Защиту от снятия компонента с производства.*
- *Оценку стоимости проекта по компонентам.*
- *Изготовление тестовой платы монтаж и пусконаладочные работы.*

*Тел: +7 (812) 336 43 04 (многоканальный)*
*Email: org@lifeelectronics.ru*

***www.lifeelectronics.ru***