DEMO CIRCUIT 1188
QUICK START GUIDE

LT3684EMSE
2A, 34V Step-Down Switching Regulator

DESCRIPTION

Demonstration circuit 1188 is a monolithic step-down DC/DC switching regulator featuring the LT3684. The demo circuit is designed for a 3.3V output from a 4.5V to 34V input. The wide input range of the LT3684 allows a variety of input sources. The typical sources are automotive batteries, wall adaptors and industrial supplies. The programmed 800kHz switching frequency allows the use of small, low cost inductor and ceramic capacitors, resulting in low, predictable output ripple. The current mode control scheme creates fast transient response and good loop stability. The gate drive of the internal switch is boosted to a voltage that is higher than the Vin to ensure saturation of the switch. The LT3684's integrated boost diode reduces the parts count. The RUN/SS pin can be used to set the part in micropower shutdown mode, reducing the supply current to less than 1uA. The RUN/SS pin can also be used to program soft start. In this mode, the RUN/SS pin is driven through an external RC filter to create a voltage ramp on this pin. The soft start function reduces the input current surge during start-up.

The LT3684 datasheet gives a complete description of the part, operation and application information. The datasheet must be read in conjunction with this quick start guide for demo circuit 1188.

Design files for this circuit board are available. Call the LTC factory.

, LTC and LT are registered trademarks of Linear Technology Corporation.

Performance Summary for Step-down Switching Regulator (T_A = 25^{0}C)

PARAMETER FOR BUCK REGULATOR	CONDITION	VALUE
Minimum Input Voltage		4.5V
Maximum Input Voltage		34V
Output Voltage V_{OUT}		3.3V +/- 4%
Maximum Output Current		2A
Typical Switching Frequency		800kHz

QUICK START PROCEDURE

Demonstration circuit 1188 is easy to set up to evaluate the performance of the LT3684. Refer to Figure 1 for proper measurement equipment setup and follow the procedure below:

NOTE. When measuring the input or output voltage ripple, care must be taken to avoid a long ground lead on the oscilloscope probe. Measure the input or output voltage ripple by touching the probe tip directly across the Vin or Vout and GND terminals. See Figure 2 for proper scope probe technique.

1. Place JP1 on the RUN position:
2. With power off, connect the input power supply to Vin and GND.
3. Turn on the power at the input.

   NOTE. Make sure that the input voltage does not exceed the maximum input voltage.

4. Check for the proper output voltage.

   NOTE. If there is no output, temporarily disconnect the load to make sure that the load is not set too high.

5. Once the proper output voltage is established, adjust the load within the operating range and observe the output voltage regulation, ripple voltage, efficiency and other parameters.

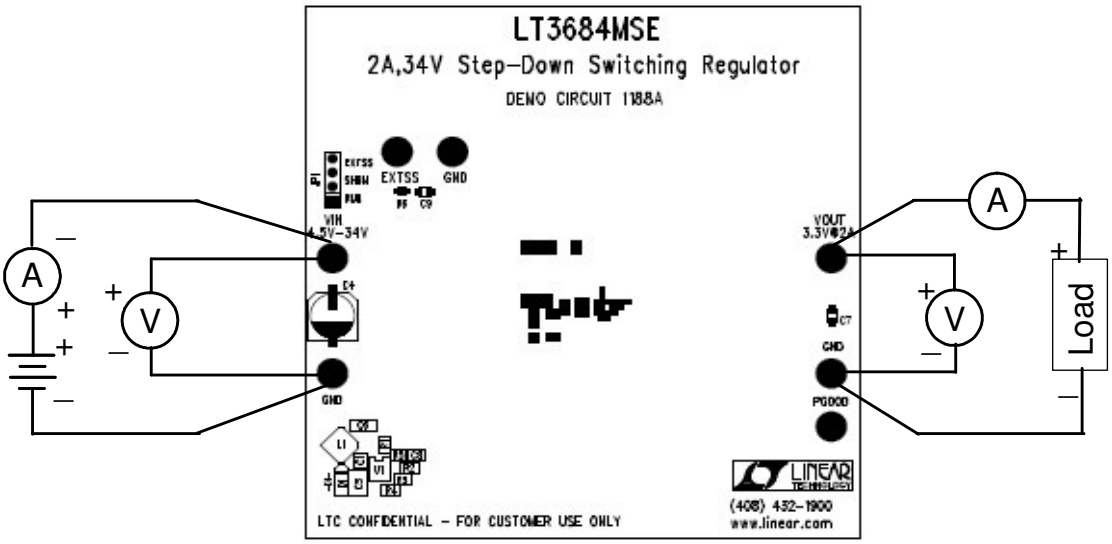

Figure 1. Proper Measurement Equipment Setup

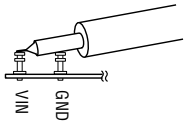

Figure 2. Measuring Input or Output Ripple

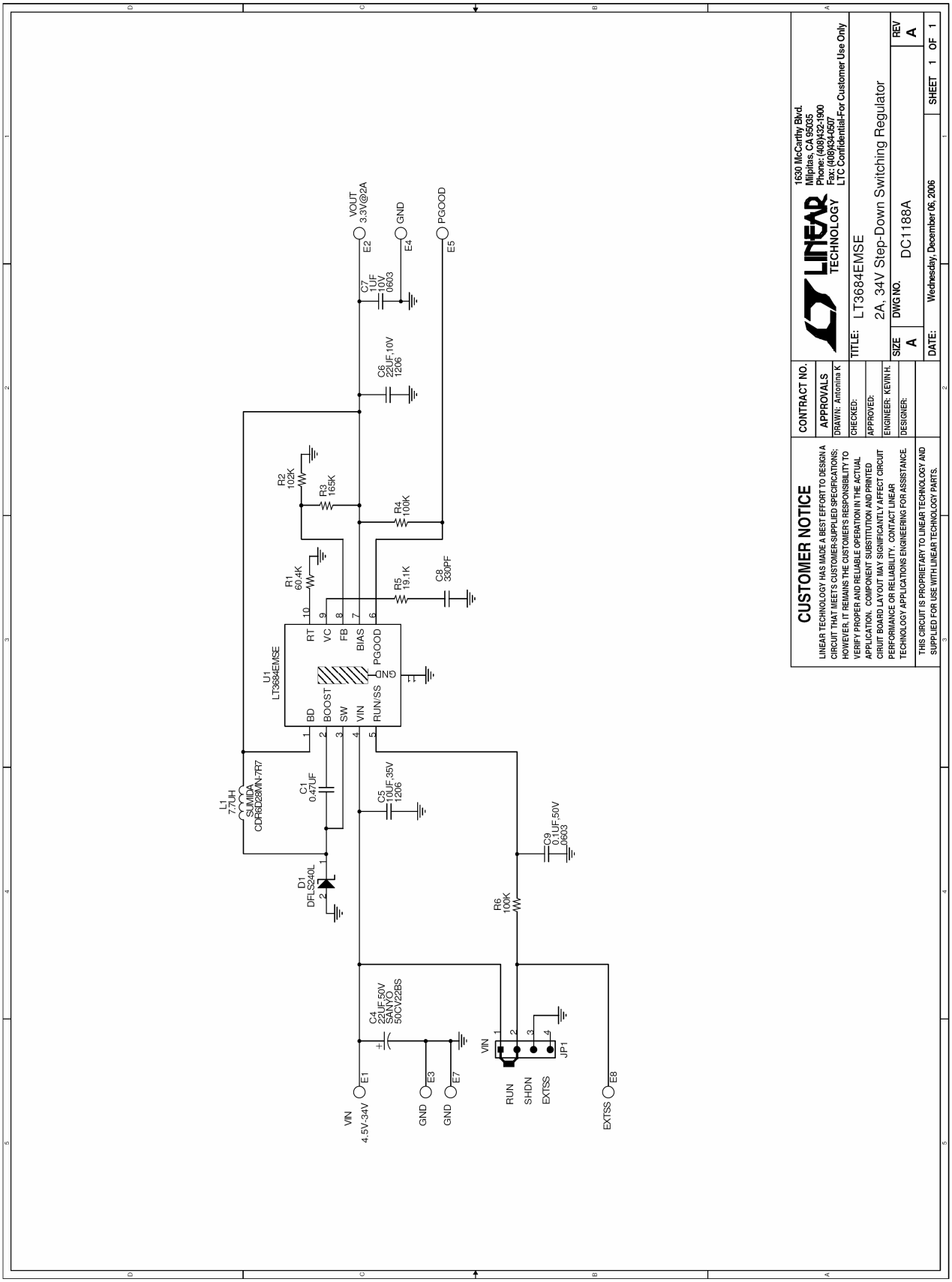
VOUT
3.3V@2A
E2
GND
E4
PGOOD
E5
C7
1UF
10V
0603
C6
22UF,10V
1206
R2
102K
R3
165K
R4
100K
R1
60.4K
R5
19.1K
C8
330PF
U1
LT3684EMSE
RT
VC
FB
BIAS
PGOOD
GND
BD
BOOST
SW
VIN
RUN/SS
L1
7.7UH
SUMIDA
CDRH6D28/NP-7R7
C1
0.47UF
C5
10UF,35V
1206
D1
DFLS240L
C9
0.1UF,50V
0603
R6
100K
C4
22UF,50V
SANYO
50CV22BS
VIN
4.5V-34V
E1
GND
E3
GND
E7
VIN
RUN
SHDN
EXTSS
JP1
EXTSS
E8
CUSTOMER NOTICE
LINEAR TECHNOLOGY HAS MADE A BEST EFFORT TO DESIGN A CIRCUIT THAT MEETS CUSTOMER-SUPPLIED SPECIFICATIONS; HOWEVER, IT REMAINS THE CUSTOMER'S RESPONSIBILITY TO VERIFY PROPER AND RELIABLE OPERATION IN THE ACTUAL APPLICATION. COMPONENT SUBSTITUTION AND PRINTED CIRUIT BOARD LAYOUT MAY SIGNIFICANTLY AFFECT CIRCUIT PERFORMANCE OR RELIABILITY. CONTACT LINEAR TECHNOLOGY APPLICATIONS ENGINEERING FOR ASSISTANCE.
THIS CIRCUIT IS PROPRIETARY TO LINEAR TECHNOLOGY AND SUPPLIED FOR USE WITH LINEAR TECHNOLOGY PARTS.
CONTRACT NO.
APPROVALS
DRAWN: Antonina K
CHECKED:
APPROVED:
ENGINEER: KEVIN H.
DESIGNER:
LINEAR TECHNOLOGY
1630 McCarthy Blvd.
Milpitas, CA 95035
Phone: (408)432-1900
Fax: (408)434-0507
LTC Confidential-For Customer Use Only
TITLE: LT3684EMSE
2A, 34V Step-Down Switching Regulator
SIZE A
DWG NO. DC1188A
REV A
DATE: Wednesday, December 06, 2006
SHEET 1 OF 1

ООО «ЛайфЭлектроникс» “LifeElectronics” LLC

ИНН 7805602321 КПП 780501001 Р/С 40702810122510004610 ФАКБ "АБСОЛЮТ БАНК" (ЗАО) в г.Санкт-Петербурге К/С 30101810900000000703 БИК 044030703

Компания «Life Electronics» занимается поставками электронных компонентов импортного и отечественного производства от производителей и со складов крупных дистрибьюторов Европы, Америки и Азии.

С конца 2013 года компания активно расширяет линейку поставок компонентов по направлению коаксиальный кабель, кварцевые генераторы и конденсаторы (керамические, пленочные, электролитические), за счёт заключения дистрибьюторских договоров

Мы предлагаем:

- *Конкурентоспособные цены и скидки постоянным клиентам.*
- *Специальные условия для постоянных клиентов.*
- *Подбор аналогов.*
- *Поставку компонентов в любых объемах, удовлетворяющих вашим потребностям.*

- *Приемлемые сроки поставки, возможна ускоренная поставка.*
- *Доставку товара в любую точку России и стран СНГ.*
- *Комплексную поставку.*
- *Работу по проектам и поставку образцов.*
- *Формирование склада под заказчика.*

- *Сертификаты соответствия на поставляемую продукцию (по желанию клиента).*
- *Тестирование поставляемой продукции.*
- *Поставку компонентов, требующих военную и космическую приемку.*
- *Входной контроль качества.*
- *Наличие сертификата ISO.*

В составе нашей компании организован Конструкторский отдел, призванный помогать разработчикам, и инженерам.

Конструкторский отдел помогает осуществить:

- *Регистрацию проекта у производителя компонентов.*
- *Техническую поддержку проекта.*
- *Защиту от снятия компонента с производства.*
- *Оценку стоимости проекта по компонентам.*
- *Изготовление тестовой платы монтаж и пусконаладочные работы.*

Тел: +7 (812) 336 43 04 (многоканальный)
Email: org@lifeelectronics.ru

www.lifeelectronics.ru