# SERIES 62S

**Compact 1/2" Package**

## FEATURES

- Compact Size
- Requires Minimal Behind Panel Space
- 1 Million Rotational Cycles for Low and Medium Torque, 1/2 Million for High
- 3 Million Rotations for Non-Detent Styles
- Optional Integral Pushbutton
- Choices of Cable Length and Terminations

## APPLICATIONS

- Global Positioning/Driver Information Systems
- Medical Equipment

**DIMENSIONS** in inches (and millimeters)

Unless otherwise specified, standard tolerance is ±.010 (0,25)

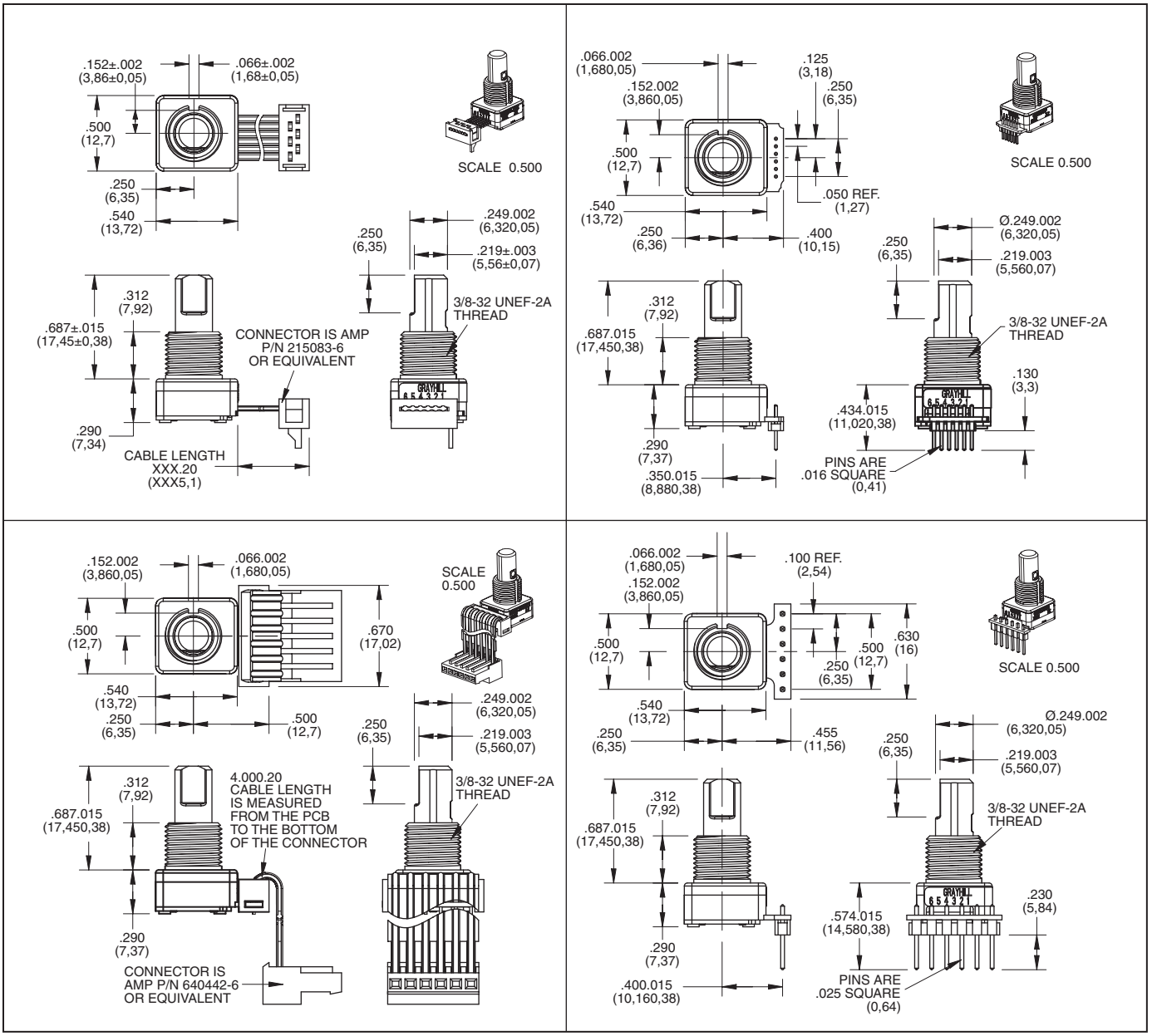

## CIRCUITRY, TRUTH TABLE, AND WAVEFORM Standard Quadrature 2-Bit Code

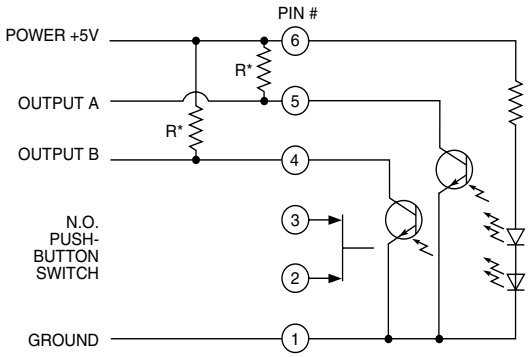


* External pull-up resistors required for operation (2.2 kΩ).

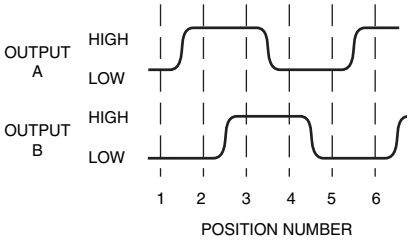


| Clockwise Rotation | | |
|---|---|---|
| Position | Output A | Output B |
| 1 | | |
| 2 | ● | |
| 3 | ● | ● |
| 4 | | ● |

● Indicates logic high; blank indicates logic low.
Code repeats every 4 positions.

## SPECIFICATIONS

### Environmental Specifications

**Operating Temp. Range:** -40°C to 85°C
**Storage Temp. Range:** -55°C to 100°C
**Humidity:** 96 Hours at 90–95% humidity at 40°C
**Mechanical Vibration:** Harmonic motion with amplitude of 15G's, within a varied frequency of 10 to 2000 Hz
**Mechanical Shock:** Test 1: 100G for 6 mS, half sine wave with a velocity change of 12.3 ft/s; Test 2: 100G for 6 mS, sawtooth wave with a velocity change of 9.7 ft/s

### Rotary Electrical and Mechanical Specifications

**Operating Voltage:** 5.00 ±0.25 Vdc
**Supply Current:** 25mA max at 5.25Vdc
**Output:** Open collector phototransistor, external pull up resistors are required
**Output Code:** 2-Bit quadrature, channel A leads channel B by 90° electrically during clockwise rotation of the shaft
**Logic Output Characteristics:**
Logic High shall be no less than 3.8 Vdc
Logic Low shall be no greater than 0.8Vdc
**Minimum Sink Current:** 2.0 mA
**Power Consumption:** 132mW maximum (includes power in 2 pull-up resistors)
**Mechanical Life:**

| | |
|---|---|
| Non-Detent | 3 Million Cycles |
| Low & Medium | 1 Million Cycles |
| High | 1/2 Million Cycles |

1 cycle is a rotation through all positions and a full return

| AVERAGE ROTATIONAL TORQUE SPECIFICATIONS | | | |
|---|---|---|---|
| | LOW | MEDIUM | HIGH |
| | ±0.50 IN-OZ | ±1.40 IN-OZ | ±1.60 IN-OZ |
| 8 POSITION | 1.10 | 1.85 | 2.75 |
| 12 POSITION | 1.00 | 1.70 | 2.95 |
| 16 POSITION | 1.40 | 2.35 | 3.40 |
| 20 POSITION | 1.35 | 2.05 | 2.80 |
| 24 POSITION | 1.25 | 1.95 | 2.95 |
| 32 POSITION | 0.95 | 1.40 | 2.15 |

Torque shall be within 50% of initial value throughout life
**Mounting Torque:** 15 in-lbs maximum
**Shaft Push-Out Force:** 45 lbs minimum
**Shaft Pull-Out Force:** 45 lbs minimum
**Terminal Strength:** 15 lbs minimum terminal pull-out force for cable or header termination
**Solderability:** 95% free of pin holes and voids

### Pushbutton Electrical & Mechanical Specifications

**Rating:** 10 mA at 5 Vdc
**Contact Resistance:** <10Ω
**Life:** 3 million actuations minimum
**Contact Bounce:** <4 ms Make, <10 ms Break
**Actuation Force:** 9-950±150 grams, 5-510±150 grams, 4-400±100 grams, 3-300±90 grams, 2-200±75 grams
**Shaft Travel:** .025±.010 inch

### Materials and Finishes

**Bushing:** Zamak 2
**Shaft:** Aluminum or Zamak 2
**Retaining Ring:** Stainless steel
**Pushbutton Actuator:** Zytel 70G33L
**Detent Spring:** Music wire
**Detent Ball:** Stainless steel
**Code Housing:** Polyamide polymer, nylon 6/10 alloy UL94HB
**Code Rotor:** Delrin 100
**Printed Circuit Boards:** NEMA grade FR-4, double clad with copper, plated with gold over nickel
**Infrared Emiting Diode Chips:** Gallium aluminum arsenide
**Silicon Phototransistor Chips:** Gold and Aluminum Alloys
**Resistor:** Metal oxide on ceramic substrate
**Solder Pins:** Brass, plated with tin
**Pushbutton Dome:** Stainless steel
**Backplate:** Stainless steel
**Cable:** Copper stranded with topcoat in PVC insulation (Cable version only)
**Connector (.050 Center):** PA4.6 with tin over nickel plated phosphor bronze
**Connector (.100 Center):** Nylon UL94V-2, tin plated copper alloy
**Label:** TT406 Thermal transfer cast film
**Solder:** Sn/Ag/Cu, Lead-Free, No Clean
**Lubricating Grease:** NYE nyogel 774L
**Hex Nut:** Nickel, plated with brass
**Lockwasher:** Stainless steel
**Header:** Hi-Temp glass filled thermoplastic UL94V-0, phoshor bronze (pin versions only)
**Strain Relief:** Glass filled thermoplastic (.100 center cable versions only)

## OPTIONS

Contact Grayhill for custom terminations, shaft and bushing configurations, rotational torque pushbutton force, and code output. Control knobs are also available.

## ORDERING INFORMATION

**62SXX-XX-040X**

**Angle of Throw**
45=45° for Code Change and 8 Detent Positions
30=30° for Code Change and 12 Detent Positions
22=22.5° for Code Change and 16 Detent Positions
18=18° for Code Change and 20 Detent Positions
15=15° for Code Change and 24 Detent Positions
11=11.25° for Code Change and 32 Detent Positions

**Rotational Torque Option**
N = Non-detent
L = Low Torque (available with 0, 4, 5, 9 pushbutton only)
M = Medium Torque (available with 0, 5, 9 pushbutton only)
H = High Torque (available with 0, 9 pushbutton only)

**Termination**
C = .050 Center Ribbon Cable with Connector
S = .050 Center Ribbon Cable with .100 Stripped End
P = .050 Center Pins with .130 Length
CH = .100 Center Ribbon Cable with Connector
SH = .100 Center Ribbon Cable with .100 Stripped End
PH = .100 Center Pins with .230 Length

**Cable Length**
Cable Termination: 040=4.0in or 040in. Cable is terminated with Amp Connector P/N 3-640442-6
See Amp Mateability Guide for mating connector details.

**Pushbutton Option**

| | |
|---|---|
| 0 = NO PUSHBUTTON | 4 = 400 Grams |
| 9 = 950 Grams | 3 = 300 Grams |
| 5 = 510 Grams | 2 = 200 Grams |

ООО «ЛайфЭлектроникс» “LifeElectronics” LLC

ИНН 7805602321 КПП 780501001 Р/С 40702810122510004610 ФАКБ "АБСОЛЮТ БАНК" (ЗАО) в г.Санкт-Петербурге К/С 30101810900000000703 БИК 044030703

*Компания «Life Electronics» занимается поставками электронных компонентов импортного и отечественного производства от производителей и со складов крупных дистрибьюторов Европы, Америки и Азии.*

*С конца 2013 года компания активно расширяет линейку поставок компонентов по направлению коаксиальный кабель, кварцевые генераторы и конденсаторы (керамические, пленочные, электролитические), за счёт заключения дистрибьюторских договоров*

*Мы предлагаем:*

- *Конкурентоспособные цены и скидки постоянным клиентам.*
- *Специальные условия для постоянных клиентов.*
- *Подбор аналогов.*
- *Поставку компонентов в любых объемах, удовлетворяющих вашим потребностям.*

- *Приемлемые сроки поставки, возможна ускоренная поставка.*
- *Доставку товара в любую точку России и стран СНГ.*
- *Комплексную поставку.*
- *Работу по проектам и поставку образцов.*
- *Формирование склада под заказчика.*

- *Сертификаты соответствия на поставляемую продукцию (по желанию клиента).*
- *Тестирование поставляемой продукции.*
- *Поставку компонентов, требующих военную и космическую приемку.*
- *Входной контроль качества.*
- *Наличие сертификата ISO.*

*В составе нашей компании организован Конструкторский отдел, призванный помогать разработчикам, и инженерам.*

*Конструкторский отдел помогает осуществить:*

- *Регистрацию проекта у производителя компонентов.*
- *Техническую поддержку проекта.*
- *Защиту от снятия компонента с производства.*
- *Оценку стоимости проекта по компонентам.*
- *Изготовление тестовой платы монтаж и пусконаладочные работы.*

*Тел: +7 (812) 336 43 04 (многоканальный)*
*Email: org@lifeelectronics.ru*

***www.lifeelectronics.ru***