THIS DRAWING IS UNPUBLISHED. RELEASED FOR PUBLICATION 20
© COPYRIGHT 20 BY - ALL RIGHTS RESERVED.

LOC	DIST
GP	00

REVISIONS

P	LTR	DESCRIPTION	DATE	DWN	APVD
	A	PRODUCTION RELEASE	29FEB2016	JW	SH
	A1	REVISED PER ECR-18-013796	30AUG2018	IT	SH
	A2	REVISED PER ECR-18-016039	100CT2018	IT	SH

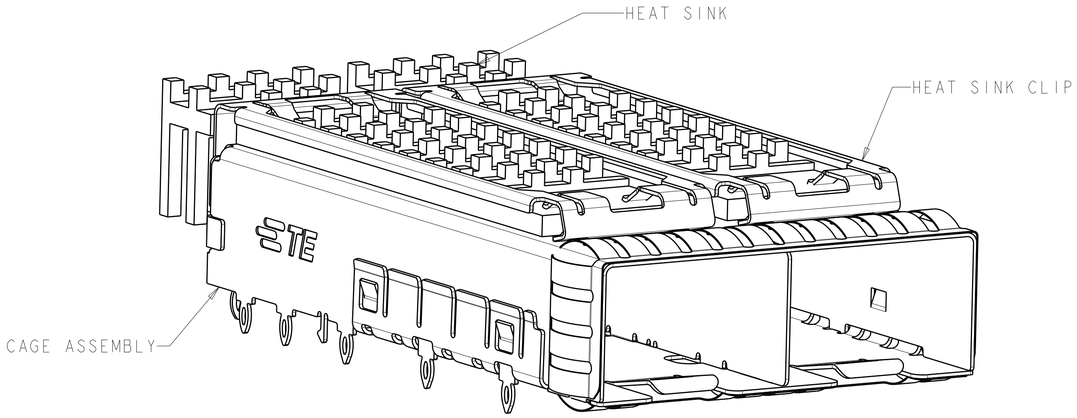

2170190-1
SCALE 5:1

1. MATERIAL:
   CAGE ASSEMBLY: 0.25mm THICK NICKEL SILVER ALLOY
   EMI SPRINGS: COPPER ALLOY
   HEAT SINK: ALUMINUM
   HEAT SINK CLIP: STAINLESS STEEL.
   INSULATOR: KAPTON

2. FINISH:
   2170190-1/-2/-4 HEAT SINK: HARD ANODIC COATING
   2170190-3 HEAT SINK: BLACK ANODIZE
   HEAT SINK CLIP: PASSIVATE.

3. DATUM AND BASIC DIMENSIONS ESTABLISHED BY CUSTOMER.

5. PADS AND VIAS CHASSIS GROUND.

5. MATES WITH SFP MSA COMPLIANT RECIEVERS.

6. INTERPRETATION OF DATUM REFERENCE FRAME IN ACCORDANCE WITH SECT 4.4.1.1 OR ASME Y14.5M-1994.

7. MINIMUM PC BOARD THICKNESS:
   SINGLE SIDED: 1.5mm
   DOUBLE SIDED: 2.25

8. HOLE PATTERN REPEATS FOR EACH PORT, SPACING BETWEEN PORTS IS 14.25mm.

9. REFERENCE APPLICATION SPEC. 114-13120, HOLE A, FOR RECOMMENDED DRILL HOLE DIAMETER AND PLATING THICKNESS.

10. REFERENCE APPLICATION SPEC. 114-13120, HOLE B, FOR RECOMMENDED DRILL HOLE DIAMETER AND PLATING THICKNESS.

11. CERTAIN MATING TRANCEIVERS MAY REQUIRE ADDITIONAL PCB THICKNESS THAT WOULD NEED TO BE DETERMINED BY THE CUSTOMER.

12. PRODUCT COMPLIES WITH SPECIFICATION SFF-8433 IMPROVED PLUGGABLE FORM FACTOR FOR SFP+ GANGED CAGES.

13. DIMENSION APPLIES PRIOR TO INSERTION OF SFP MODULE.

14. PRELIMINARY PART, NO RELEASED TO MASS PRODUCTION

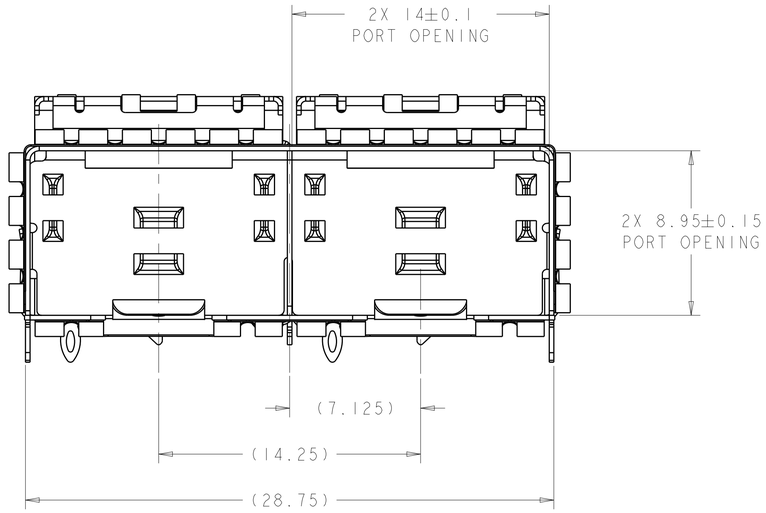

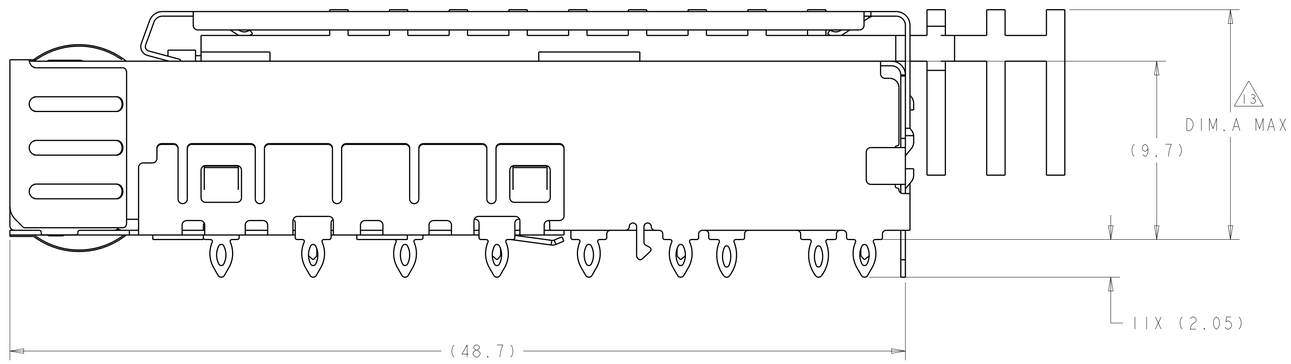

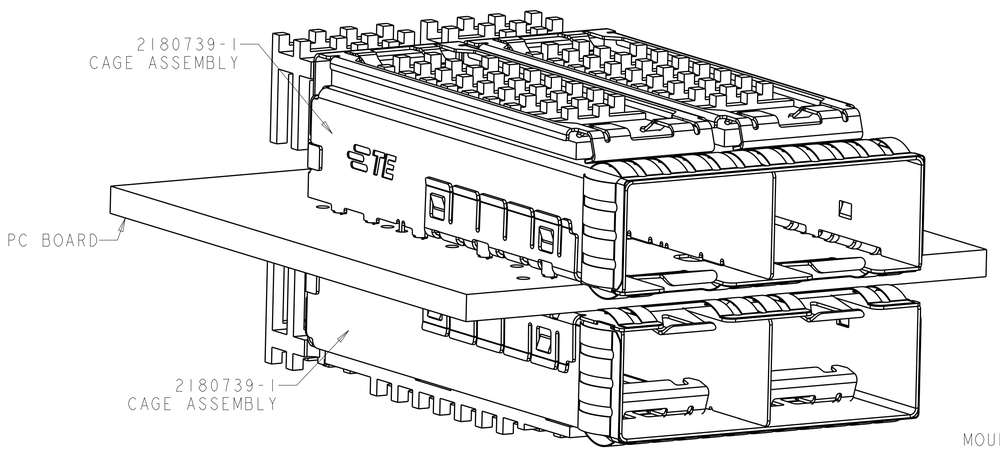

2170190-1
MOUNTED BELLY TO BELLY
SCALE 4:1

PIN TYPE	HEAT SINK W/ THE FRIST ROW PIN	2170190-4
FIN TYPE	HEAT SINK W/ THE FRIST ROW PIN	2170190-3
PIN TYPE	HEAT SINK W/ THE FIRST ROW PIN	2170190-2
PIN TYPE	HEAT SINK W/O THE FIRST ROW PIN	2170190-1
HEAT SINK	DESCRIPTION	PART NUMBER

THIS DRAWING IS A CONTROLLED DOCUMENT.

DIMENSIONS: mm

TOLERANCES UNLESS OTHERWISE SPECIFIED:
0 PLC ±0.13
1 PLC ±0.1
2 PLC ±0.08
3 PLC ±.05
4 PLC ±.05
ANGLES ±1

MATERIAL 1
FINISH 2

DWN TIM XUE 21NOV2011
CHK ALEX CAI 21NOV2011
APVD ALEX CAI 21NOV2011
PRODUCT SPEC 108-2364
APPLICATION SPEC 114-13120
WEIGHT -

TE Connectivity

NAME SFP+ ENHANCED 1X2 CAGE ASSEMBLY, PRESS-FIT, EMI SPRINGS, HEAT SINK

SIZE A1 | CAGE CODE 00779 | DRAWING NO C-2170190 | RESTRICTED TO -

CUSTOMER DRAWING | SCALE 6:1 | SHEET 1 OF 5 | REV A2

4805 (3/11)

THIS DRAWING IS UNPUBLISHED. RELEASED FOR PUBLICATION 20
© COPYRIGHT 20 BY - ALL RIGHTS RESERVED.

LOC	DIST
GP	00

REVISIONS

P	LTR	DESCRIPTION	DATE	DWN	APVD
	-	SEE SHEET 1	-	-	-

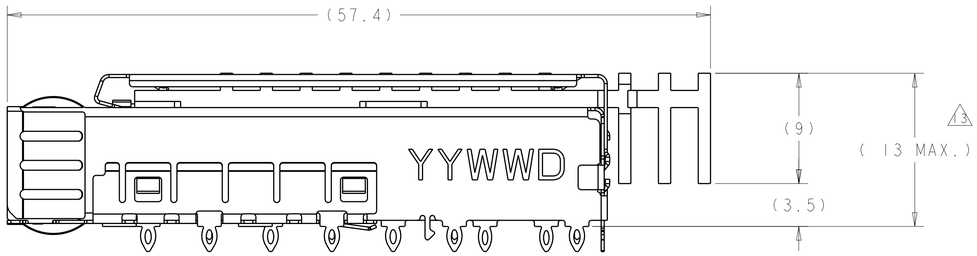

2170190-1 AS SHOWN
HEAT SINK W/O THE FIRST ROW PIN

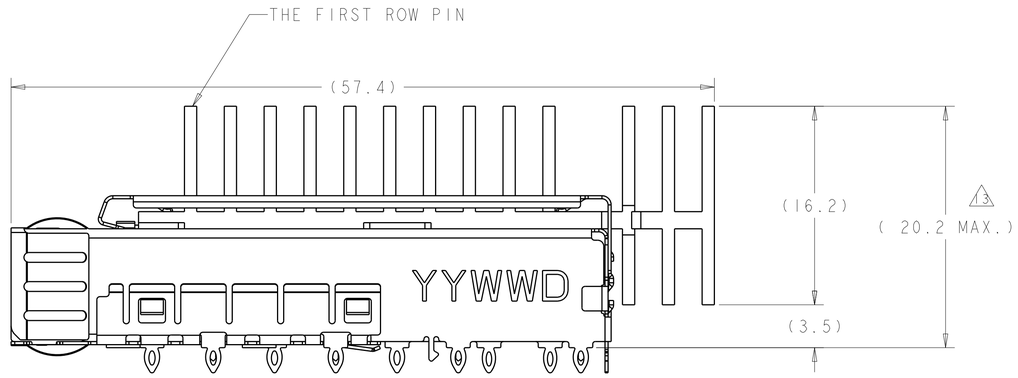

2170190-2 AS SHOWN

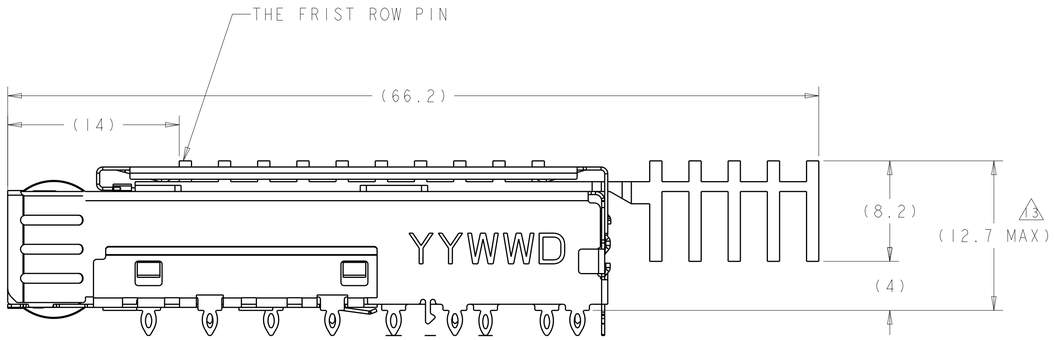

2170190-3 AS SHOWN

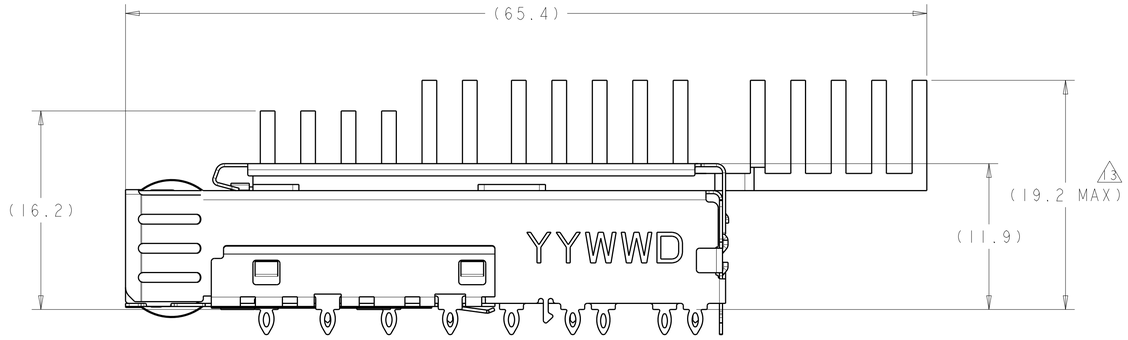

2170190-4 AS SHOWN
SCALE 4:1

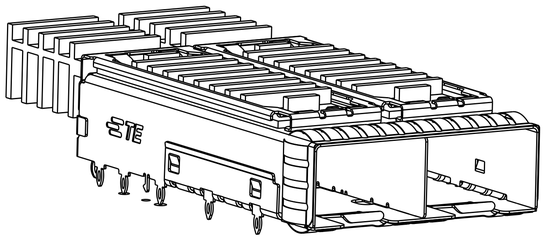

2170190-3 3D VIEW

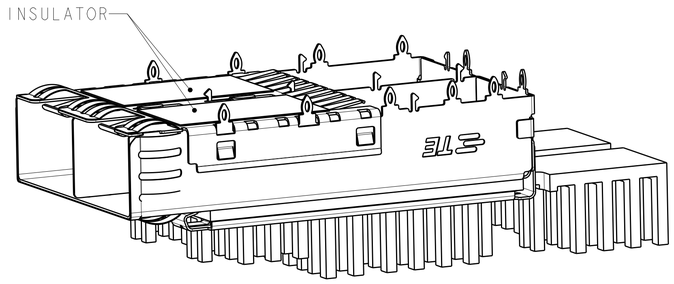

2170190-4 3D VIEW

THIS DRAWING IS A CONTROLLED DOCUMENT.

DIMENSIONS: mm

TOLERANCES UNLESS OTHERWISE SPECIFIED:
0 PLC ±0.13
1 PLC ±0.1
2 PLC ±0.08
3 PLC ±.05
4 PLC ±.05
ANGLES ±1

MATERIAL
FINISH

DWN TIM XUE 21NOV2011
CHK ALEX CAI 21NOV2011
APVD ALEX CAI 21NOV2011
PRODUCT SPEC 108-2364
APPLICATION SPEC 114-13120
WEIGHT -

TE Connectivity

NAME SFP+ ENHANCED 1X2 CAGE ASSEMBLY, PRESS-FIT, EMI SPRINGS, HEAT SINK

SIZE	CAGE CODE	DRAWING NO	RESTRICTED TO
A1	00779	C-2170190	-

CUSTOMER DRAWING | SCALE 6:1 | SHEET 2 OF 5 | REV A2

4805 (3/11)

THIS DRAWING IS UNPUBLISHED. RELEASED FOR PUBLICATION 20
© COPYRIGHT 20 BY - ALL RIGHTS RESERVED.

LOC	DIST
GP	00

REVISIONS

P	LTR	DESCRIPTION	DATE	DWN	APVD
	-	SEE SHEET 1	-	-	-

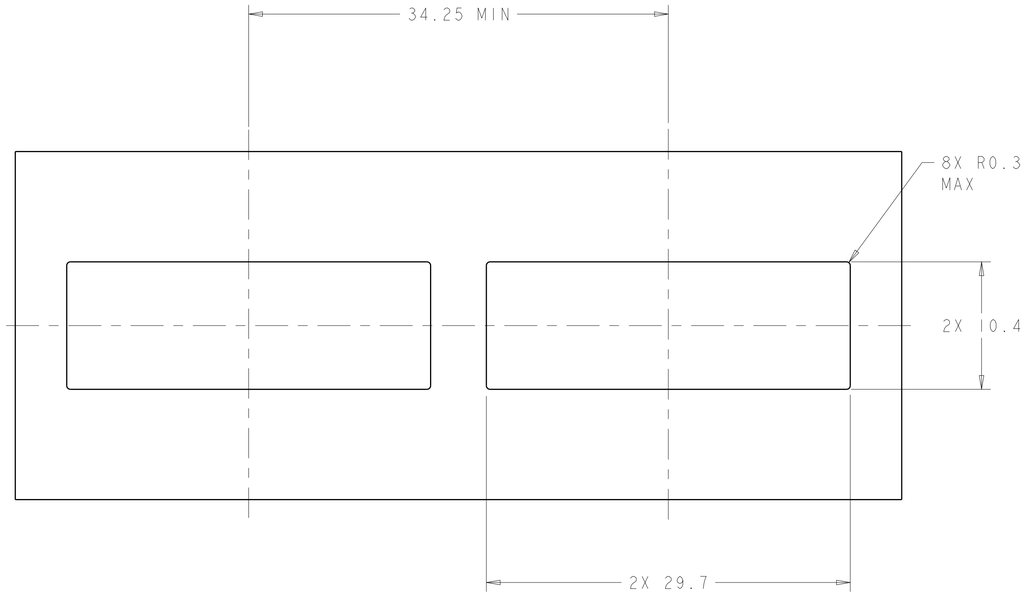

RECOMMENDED BEZEL CUT-OUT
SINGLE SIDED APPLICATIONS
SCALE 4:1

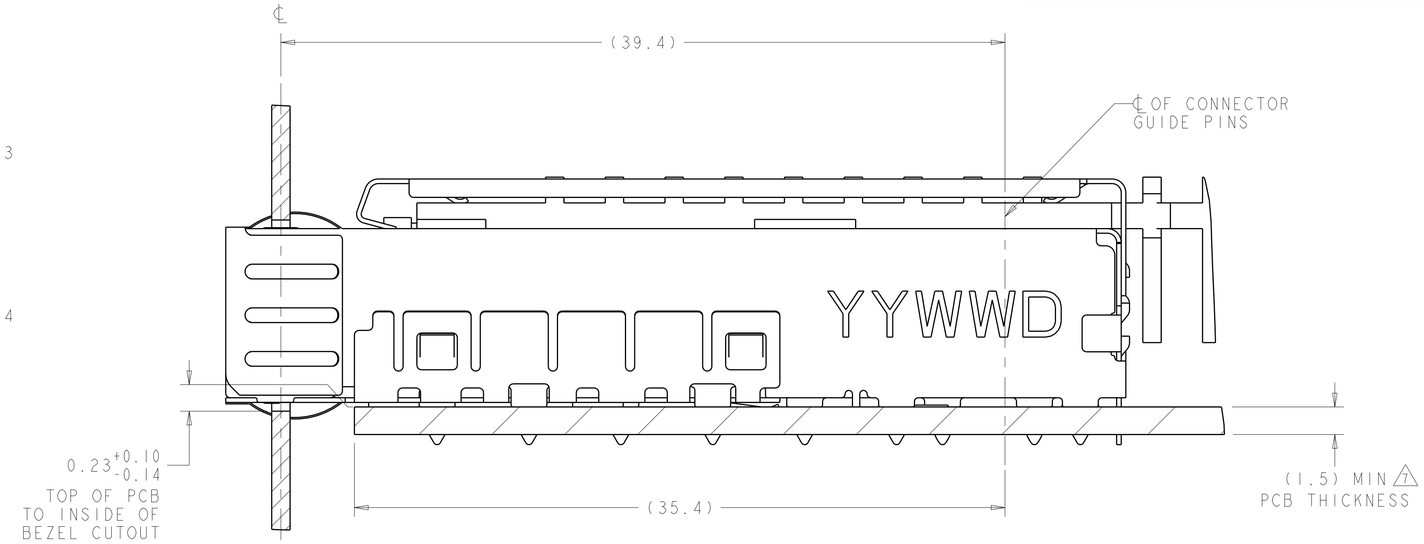

2170190-1
MOUNTED ON PC BOARD
SHOWN THRU RECOMMENDED BEZEL

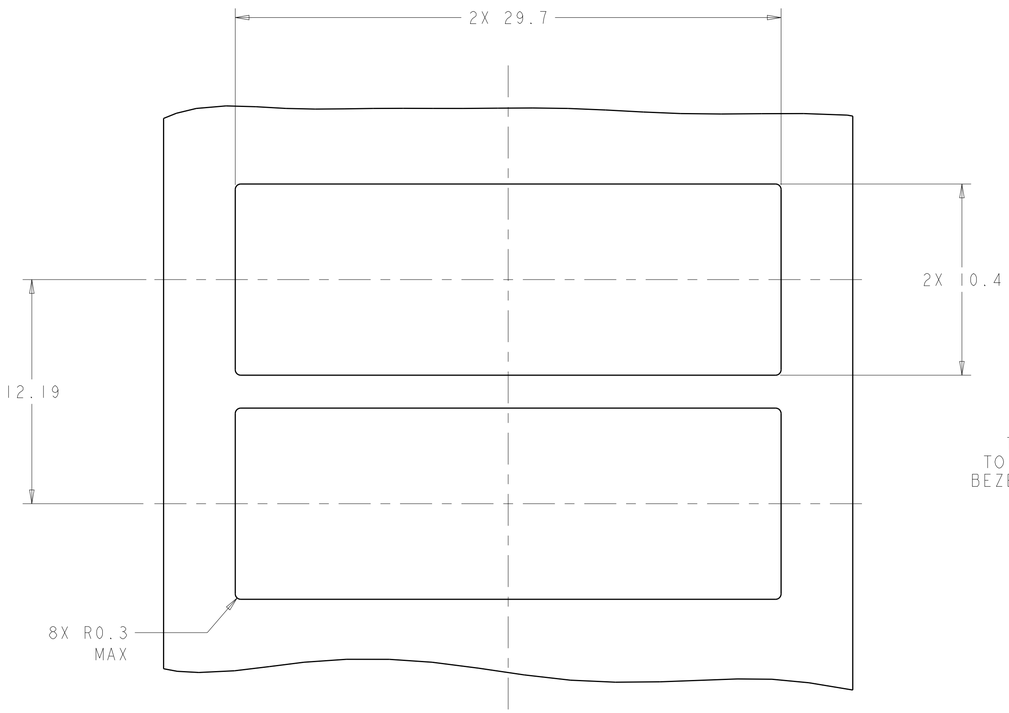

RECOMMENDED BEZEL CUT-OUT
BELLY TO BELLY APPLICATIONS

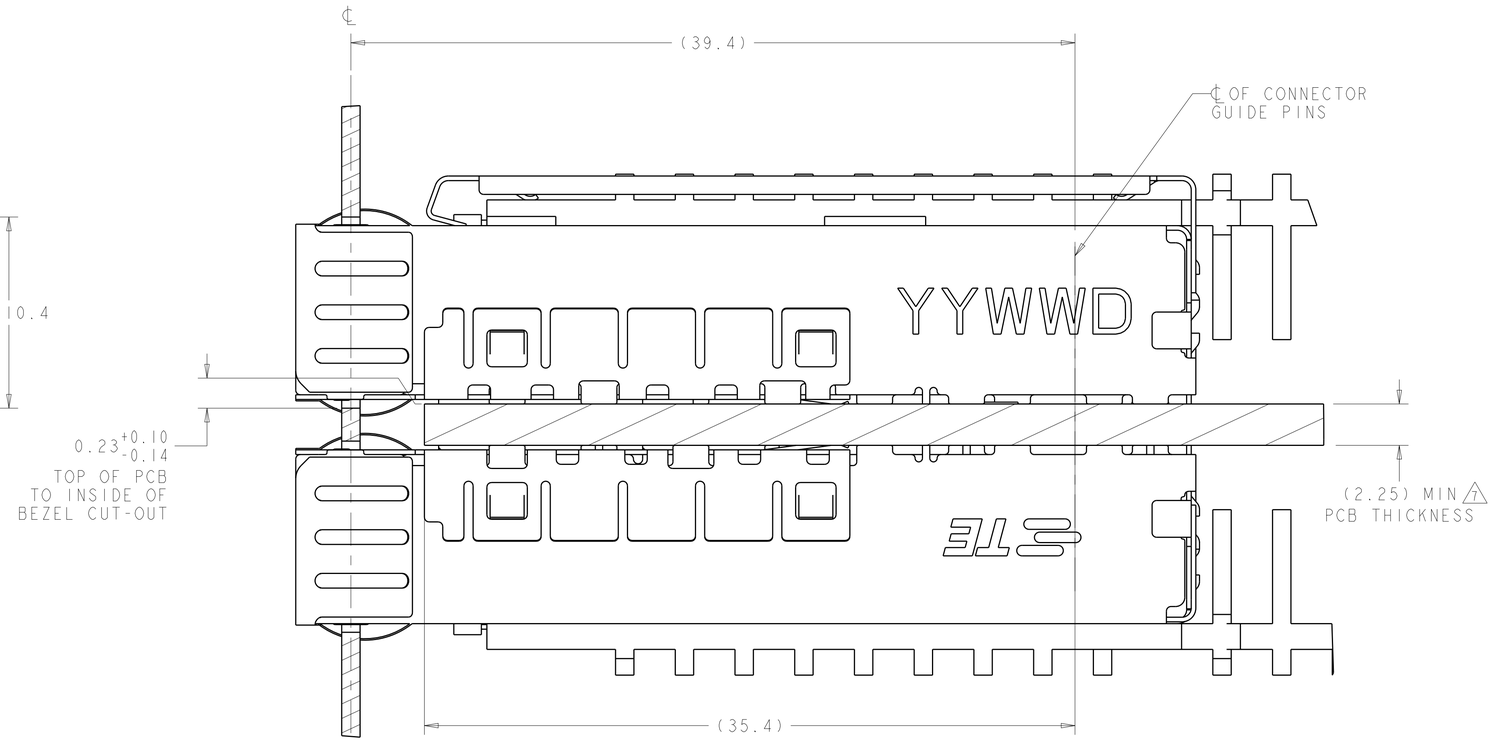

2170190-1
MOUNTED BELLY TO BELLY ON PC BOARD
SHOWN THRU RECOMMENDED BEZEL

THIS DRAWING IS A CONTROLLED DOCUMENT.

DIMENSIONS: mm

TOLERANCES UNLESS OTHERWISE SPECIFIED:
0 PLC ±0.13
1 PLC ±0.1
2 PLC ±0.08
3 PLC ±.05
4 PLC ±.05
ANGLES ±1

MATERIAL
FINISH

DWN	TIM XUE	21NOV2011
CHK	ALEX CAI	21NOV2011
APVD	ALEX CAI	21NOV2011

PRODUCT SPEC 108-2364
APPLICATION SPEC 114-13120
WEIGHT -

TE Connectivity

NAME SFP+ ENHANCED 1X2 CAGE ASSEMBLY, PRESS-FIT, EMI SPRINGS, HEAT SINK

SIZE	CAGE CODE	DRAWING NO	RESTRICTED TO
A1	00779	C-2170190	-

CUSTOMER DRAWING | SCALE 6:1 | SHEET 3 OF 5 | REV A2

4805 (3/11)

THIS DRAWING IS UNPUBLISHED. RELEASED FOR PUBLICATION 20
© COPYRIGHT 20 BY - ALL RIGHTS RESERVED.

LOC	DIST
GP	00

REVISIONS

P	LTR	DESCRIPTION	DATE	DWN	APVD
	-	SEE SHEET 1	-	-	-

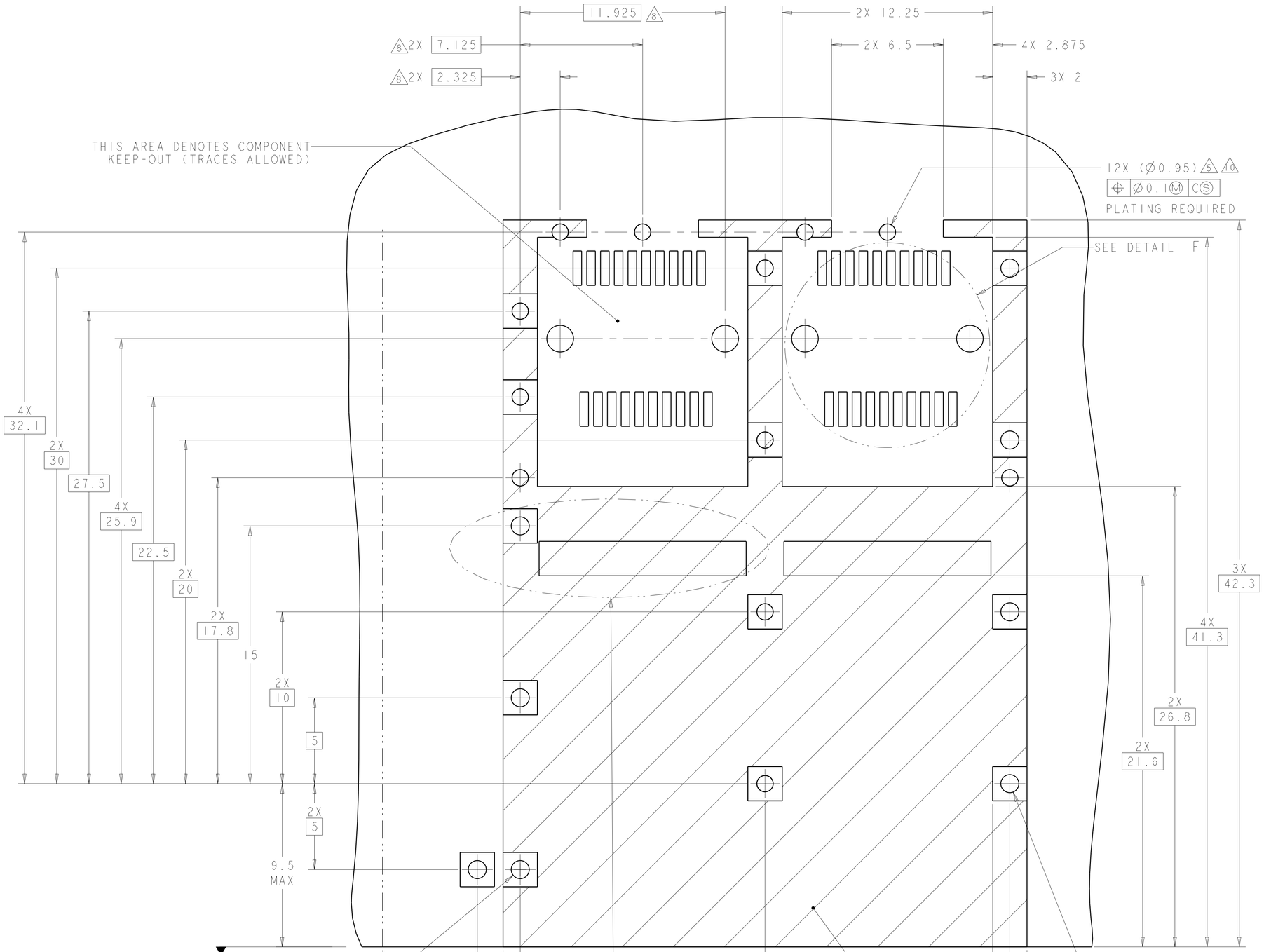

RECOMMENDED PCB CONFIGURATION
WITH KEEP-OUT AREAS
SINGLE SIDED APPLICATIONS
SCALE 8:1 [7]

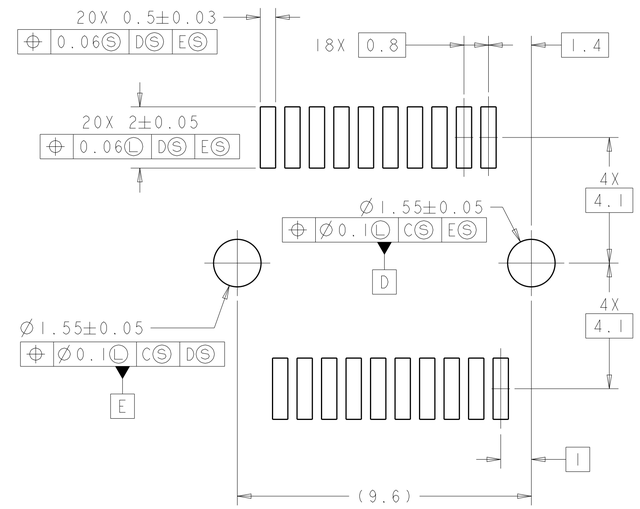

DETAIL F
SCALE 10:1

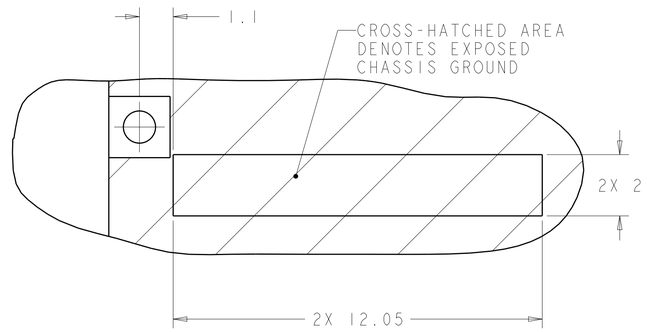

DETAIL G
SCALE 10:1

THIS DRAWING IS A CONTROLLED DOCUMENT.	DWN TIM XUE 21NOV2011	TE Connectivity	
DIMENSIONS: mm	CHK ALEX CAI 21NOV2011	NAME SFP+ ENHANCED 1X2 CAGE ASSEMBLY, PRESS-FIT, EMI SPRINGS, HEAT SINK	
TOLERANCES UNLESS OTHERWISE SPECIFIED: 0 PLC ±0.13; 1 PLACE ±0.1; 2 PLC ±0.08; 3 PLC ±0.05; 4 PLC ±0.05; ANGLES ±1	APVD ALEX CAI 21NOV2011		
	PRODUCT SPEC 108-2364		
	APPLICATION SPEC 114-13120	SIZE A1 / CAGE CODE 00779 / DRAWING NO C-2170190	RESTRICTED TO -
MATERIAL	WEIGHT -		
FINISH	CUSTOMER DRAWING	SCALE 6:1 / SHEET 4 OF 5	REV A2

THIS DRAWING IS UNPUBLISHED. RELEASED FOR PUBLICATION 20
© COPYRIGHT 20 BY - ALL RIGHTS RESERVED.

LOC	DIST
GP	00

REVISIONS

P	LTR	DESCRIPTION	DATE	DWN	APVD
	-	SEE SHEET 1	-	-	-

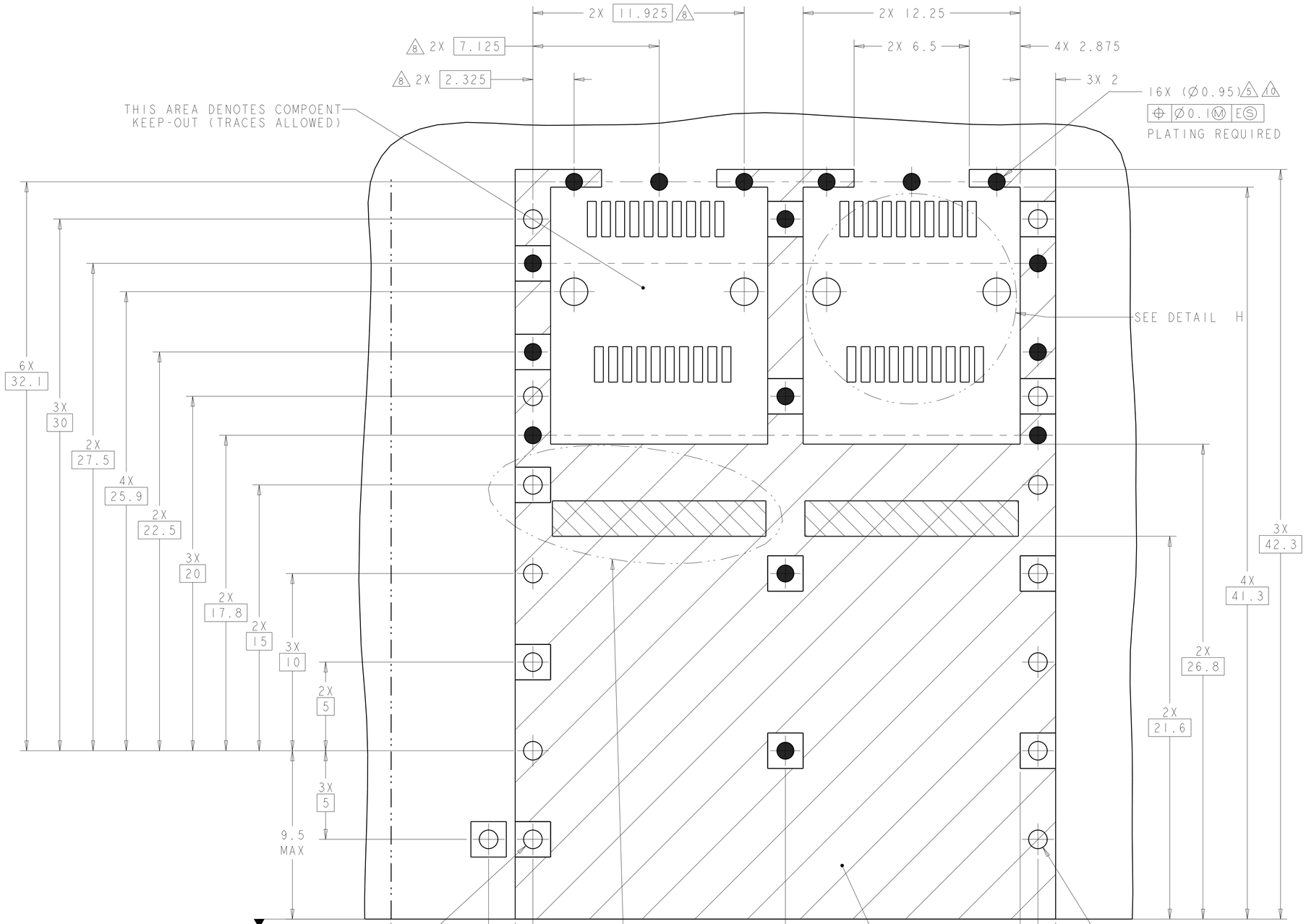

RECOMMENDED PCB CONFIGURATION
WITH KEEP-OUT AREAS
BELLY TO BELLY APPLICATIONS
SCALE 8:1 7

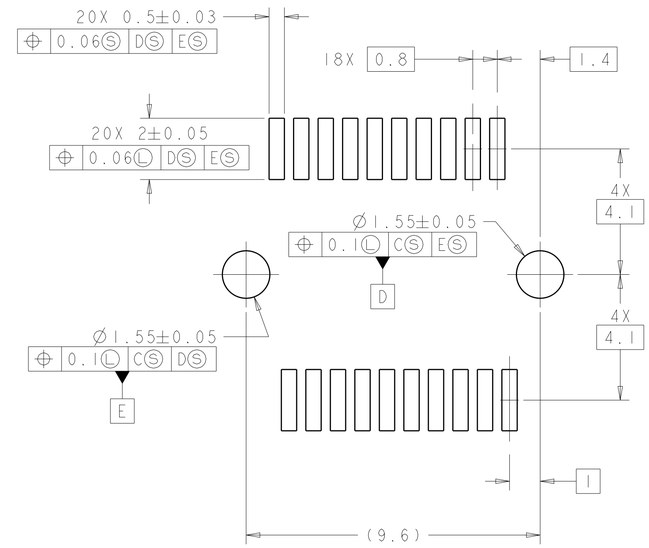

DETAIL H
SCALE 10:1

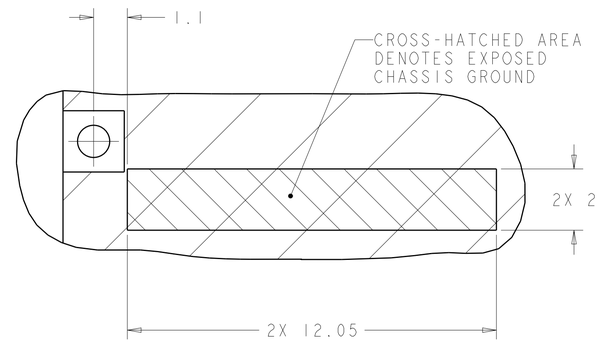

DETAIL J
SCALE 10:1

THIS DRAWING IS A CONTROLLED DOCUMENT.

DIMENSIONS: mm

TOLERANCES UNLESS OTHERWISE SPECIFIED:
0 PLC ±0.13
1 PLC ±0.1
2 PLC ±0.08
3 PLC ±0.05
4 PLC ±0.05
ANGLES ±1

MATERIAL
FINISH

DWN TIM XUE 21NOV2011
CHK ALEX CAI 21NOV2011
APVD ALEX CAI 21NOV2011
PRODUCT SPEC 108-2364
APPLICATION SPEC 114-13120
WEIGHT -

TE Connectivity

NAME SFP+ ENHANCED 1X2 CAGE ASSEMBLY, PRESS-FIT, EMI SPRINGS, HEAT SINK

SIZE	CAGE CODE	DRAWING NO	RESTRICTED TO
A1	00779	C-2170190	-

CUSTOMER DRAWING | SCALE 6:1 | SHEET 5 OF 5 | REV A2

4805 (3/11)

ООО «ЛайфЭлектроникс» “LifeElectronics” LLC

ИНН 7805602321 КПП 780501001 Р/С 40702810122510004610 ФАКБ "АБСОЛЮТ БАНК" (ЗАО) в г.Санкт-Петербурге К/С 30101810900000000703 БИК 044030703

Компания «Life Electronics» занимается поставками электронных компонентов импортного и отечественного производства от производителей и со складов крупных дистрибьюторов Европы, Америки и Азии.

С конца 2013 года компания активно расширяет линейку поставок компонентов по направлению коаксиальный кабель, кварцевые генераторы и конденсаторы (керамические, пленочные, электролитические), за счёт заключения дистрибьюторских договоров

Мы предлагаем:

- *Конкурентоспособные цены и скидки постоянным клиентам.*
- *Специальные условия для постоянных клиентов.*
- *Подбор аналогов.*
- *Поставку компонентов в любых объемах, удовлетворяющих вашим потребностям.*

- *Приемлемые сроки поставки, возможна ускоренная поставка.*
- *Доставку товара в любую точку России и стран СНГ.*
- *Комплексную поставку.*
- *Работу по проектам и поставку образцов.*
- *Формирование склада под заказчика.*

- *Сертификаты соответствия на поставляемую продукцию (по желанию клиента).*
- *Тестирование поставляемой продукции.*
- *Поставку компонентов, требующих военную и космическую приемку.*
- *Входной контроль качества.*
- *Наличие сертификата ISO.*

В составе нашей компании организован Конструкторский отдел, призванный помогать разработчикам, и инженерам.

Конструкторский отдел помогает осуществить:

- *Регистрацию проекта у производителя компонентов.*
- *Техническую поддержку проекта.*
- *Защиту от снятия компонента с производства.*
- *Оценку стоимости проекта по компонентам.*
- *Изготовление тестовой платы монтаж и пусконаладочные работы.*

Тел: +7 (812) 336 43 04 (многоканальный)
Email: org@lifeelectronics.ru

www.lifeelectronics.ru